PROJECT NUMBERS		DISTRICT	COUNTY	SHEET NO.	TOTAL
STATE	FEDERAL				
S320-64-57.44 00	NHPP-0064 (497)D	1	KANAWHA		

60% PROGRESS BRIDGE PLANS

DETAILS ARE IN PROGRESS AND UNCHECKED

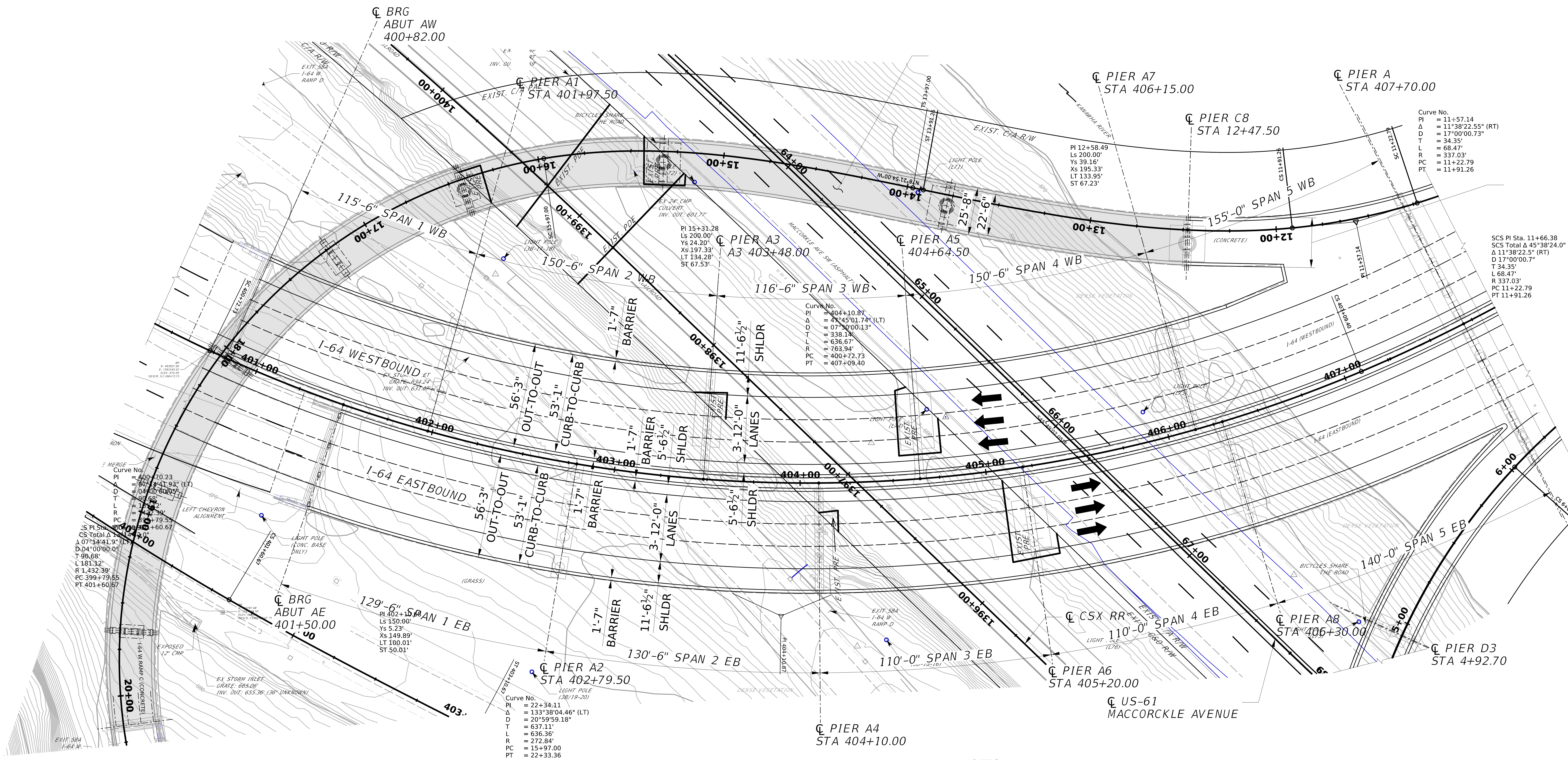

PLAN

SCOPE OF WORK

- REPLACE EXPANSION BEARINGS AT ABUTMENTS AND PIERS
- CLEAN AND LUBRICATE FIXED PIER BEARINGS
- REPAIR DETERIORATED STEEL
- INSTALL SHEAR STUDS
- REPLACE DECK AND BARRIERS
- BLAST CLEAN AND PAINT STRUCTURAL STEEL
- REPAIR/REPLACE DRAINAGE SYSTEM
- MODIFY ABUTMENTS AND REPLACE APPROACH SLABS

NOTES:

1. FOR GENERAL NOTES, SEE SHEETS XX THRU XX
2. FOR INDEX OF SHEETS, SEE SHEETS XX AND XX
3. HORIZONTAL AND VERTICAL BASELINE GEOMETRY AND SUPERELEVATIONS INFORMATION, SEE ROADWAY SHEETS.
4. FOR TYPICAL SECTIONS, SEE SHEETS XX THRU XX
5. FOR FRAMING PLAN, SEE SHEETS XX TO XX
6. FOR DECK GEOMETRY, SEE SHEETS XX TO XX
7. FOR SCUPPER AND JUNCTION BOX LOCATIONS, SEE DECK PAVING PLANS.

0 10 30
Feet

NO.	REVISION	DATE	BY

WEST VIRGINIA DEPARTMENT OF TRANSPORTATION
DIVISION OF HIGHWAYS
ENGINEERING DIVISION

I-64 OVER KANAWHA RIVER
EUGENE A. CARTER MEMORIAL BRIDGE +3
GENERAL PLAN & ELEV (1 OF 15)
WEST APPROACH PLAN

DESIGNED ANM	DATE 09/25	
DRAWN SCN	09/25	
CHECKED		
REVIEWED		

HDR ENGINEERING INC.
CONSULTING ENGINEERS
CHARLESTON, WV
681-341-6100

SHEET OF
BRIDGE NO. 2563.6

pw://pwhdruseas02.intranet.hdr:HDR_US_East_02/Documents/WV_DOT/WVDOT-Eugene_Carter_Bridge_3/6.0_CAD_BIM/6.2_WIP/HDR/6.2.2_Sheet_Files/23_Structure/1.001 General Plan.dgn
$DD-MMM-YYYY HH:MM$
SNOLEN

PROJECT NUMBERS		DISTRICT	COUNTY	SHEET NO.	TOTAL
STATE	FEDERAL				
S320-64-57.44 00	NHPP-0064 (497)D	1	KANAWHA		

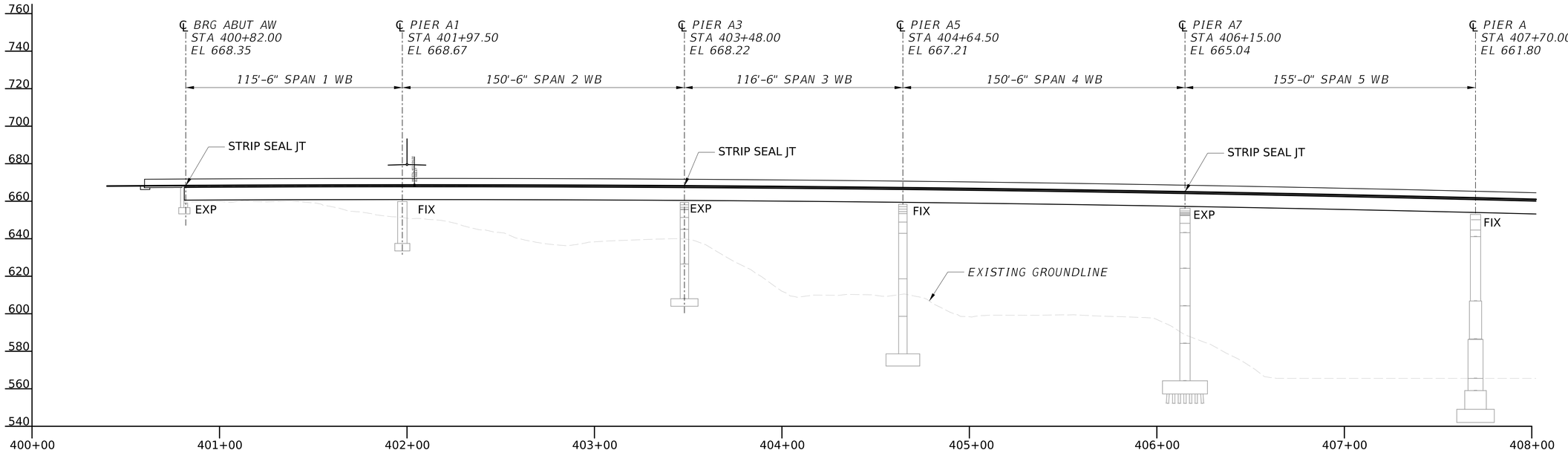

ELEVATION

NOTES:

1. FOR GENERAL NOTES, SEE SHEETS XX THRU XX
2. FOR INDEX OF SHEETS, SEE SHEETS XX AND XX
3. HORIZONTAL AND VERTICAL BASELINE GEOMETRY AND SUPERELEVATIONS INFORMATION, SEE ROADWAY SHEETS.
4. FOR TYPICAL SECTIONS, SEE SHEETS XX THRU XX
5. FOR FRAMING PLAN, SEE SHEETS XX TO XX
6. FOR DECK GEOMETRY, SEE SHEETS XX TO XX
7. FOR SCUPPER AND JUNCTION BOX LOCATIONS, SEE DECK PAVING PLANS.

0 10 30
Feet

NO.	REVISION	DATE	BY

WEST VIRGINIA DEPARTMENT OF TRANSPORTATION
DIVISION OF HIGHWAYS
ENGINEERING DIVISION

I-64 OVER KANAWHA RIVER
EUGENE A. CARTER MEMORIAL BRIDGE +3

GENERAL PLAN & ELEV (2 OF 15)
WEST APPROACH WB ELEV

DESIGNED	ANM	09/25
DRAWN	SCN	09/25
CHECKED		
REVIEWED		

HDR ENGINEERING INC.
CONSULTING ENGINEERS
CHARLESTON, WV
681-341-6100

SHEET OF

BRIDGE NO. 2563.6

SNOLEN $DD-MMM-YYYY HH:MM$ pw://pwhdruseas02.intranet.hdr:HDR_US_East_02/Documents/WV_DOT/WVDOT-Eugene_Carter_Bridge_3/6.0_CAD_BIM/6.2_WIP/HDR/6.2.2_Sheet_Files/23_Structure/1.002 General Elevation WB.dgn

PROJECT NUMBERS		DISTRICT	COUNTY	SHEET NO.	TOTAL
STATE	FEDERAL				
S320-64-57.44 00	NHPP-0064 (497)D	1	KANAWHA		

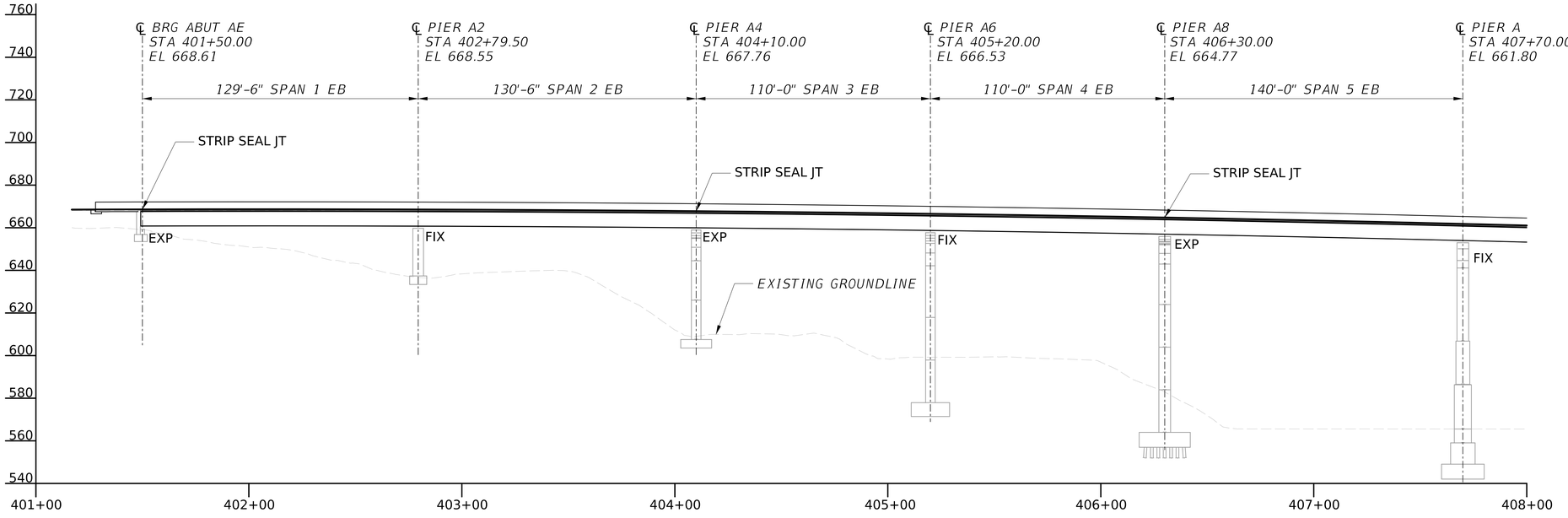

ELEVATION

NOTES:

1. FOR GENERAL NOTES, SEE SHEETS XX THRU XX
2. FOR INDEX OF SHEETS, SEE SHEETS XX AND XX
3. HORIZONTAL AND VERTICAL BASELINE GEOMETRY AND SUPERELEVATIONS INFORMATION, SEE ROADWAY SHEETS.
4. FOR TYPICAL SECTIONS, SEE SHEETS XX THRU XX
5. FOR FRAMING PLAN, SEE SHEETS XX TO XX
6. FOR DECK GEOMETRY, SEE SHEETS XX TO XX
7. FOR SCUPPER AND JUNCTION BOX LOCATIONS, SEE DECK PAVING PLANS.

0 10 30
Feet

NO.	REVISION	DATE	BY

WEST VIRGINIA DEPARTMENT OF TRANSPORTATION
DIVISION OF HIGHWAYS
ENGINEERING DIVISION

I-64 OVER KANAWHA RIVER
EUGENE A. CARTER MEMORIAL BRIDGE +3

GENERAL PLAN & ELEV (3 OF 15)
WEST APPROACH EB ELEV

DESIGNED	DATE
ANM	09/25
DRAWN	
SCN	09/25
CHECKED	
REVIEWED	

HDR ENGINEERING INC.
CONSULTING ENGINEERS
CHARLESTON, WV
681-341-6100

SHEET OF

BRIDGE NO. 2563.6

SNOLEN $DD-MMM-YYYY HH:MM$ pw://pwhdruseas02.intranet.hdr:HDR_US_East_02/Documents/WV_DOT/WVDOT-Eugene_Carter_Bridge_3/6.0_CAD_BIM/6.2_WIP/HDR/6.2.2_Sheet_Files/23_Structure/1.003 General Elevation EB.dgn

PROJECT NUMBERS		DISTRICT	COUNTY	SHEET NO.	TOTAL
STATE	FEDERAL				
S320-64-57.44 00	NHPP-0064 (497)D	1	KANAWHA		

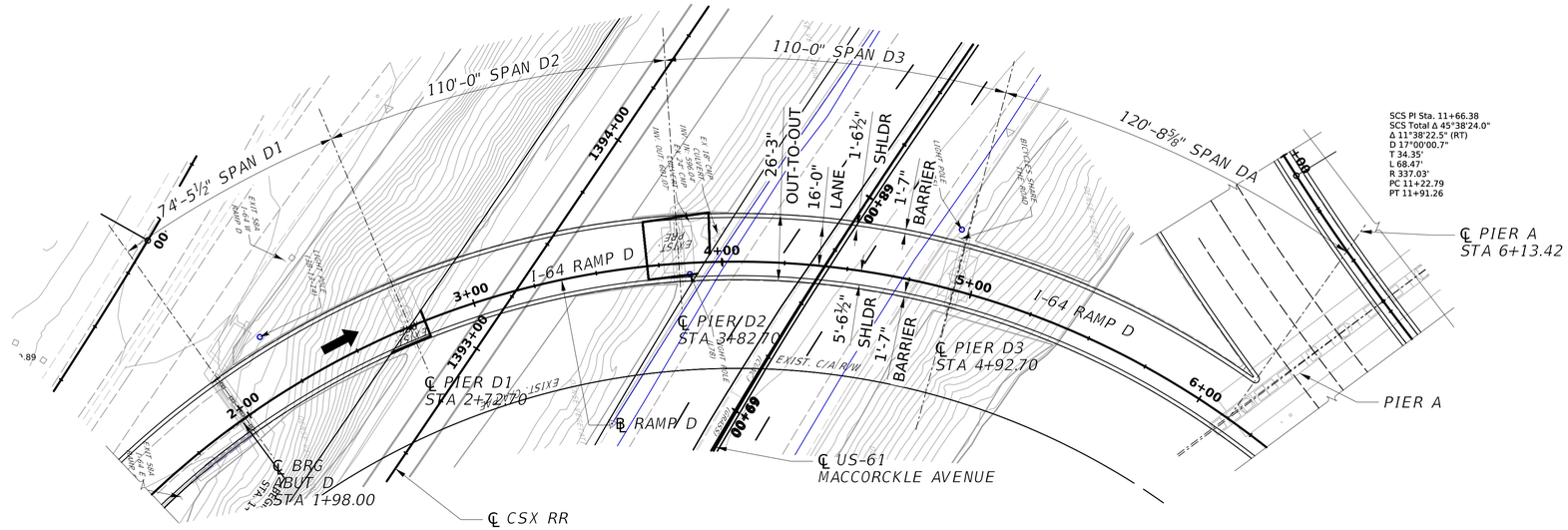

PLAN

NOTES:

1. FOR GENERAL NOTES, SEE SHEETS XX THRU XX
2. FOR INDEX OF SHEETS, SEE SHEETS XX AND XX
3. HORIZONTAL AND VERTICAL BASELINE GEOMETRY AND SUPERELEVATIONS INFORMATION, SEE ROADWAY SHEETS.
4. FOR TYPICAL SECTIONS, SEE SHEETS XX THRU XX
5. FOR FRAMING PLAN, SEE SHEETS XX TO XX
6. FOR DECK GEOMETRY, SEE SHEETS XX TO XX
7. FOR SCUPPER AND JUNCTION BOX LOCATIONS, SEE DECK PAVING PLANS.

0 10 30
Feet

NO.	REVISION	DATE	BY

WEST VIRGINIA DEPARTMENT OF TRANSPORTATION
DIVISION OF HIGHWAYS
ENGINEERING DIVISION

I-64 OVER KANAWHA RIVER
EUGENE A. CARTER MEMORIAL BRIDGE +3
GENERAL PLAN & ELEV (4 OF 15)
RAMP D PLAN

DESIGNED	ANM	DATE	09/25
DRAWN	SCN		09/25
CHECKED			
REVIEWED			

HDR ENGINEERING INC.
CONSULTING ENGINEERS
CHARLESTON, WV
681-341-6100

SHEET
OF
BRIDGE NO.
2563.6

$DD-MMM-YYYY HH:MM$ pw://pwhdruseas02.intranet.hdr:HDR_US_East_02/Documents/WV_DOT/WVDOT-Eugene_Carter_Bridge_3/6.0_CAD_BIM/6.2_WIP/HDR/6.2.2_Sheet_Files/23_Structure/1.005 General Plan Ramp D SNOLEN

PROJECT NUMBERS		DISTRICT	COUNTY	SHEET NO.	TOTAL
STATE	FEDERAL				
S320-64-57.44 00	NHPP-0064 (497)D	1	KANAWHA		

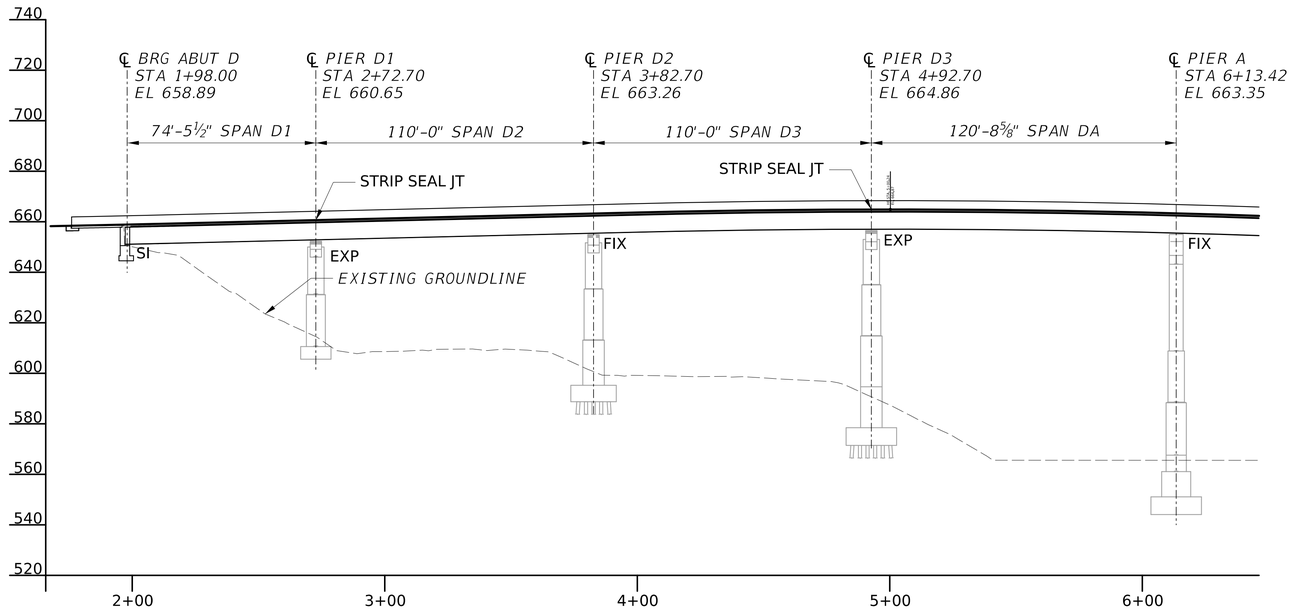

ELEVATION

NOTES:

1. FOR GENERAL NOTES, SEE SHEETS XX THRU XX
2. FOR INDEX OF SHEETS, SEE SHEETS XX AND XX
3. HORIZONTAL AND VERTICAL BASELINE GEOMETRY AND SUPERELEVATIONS INFORMATION, SEE ROADWAY SHEETS.
4. FOR TYPICAL SECTIONS, SEE SHEETS XX THRU XX
5. FOR FRAMING PLAN, SEE SHEETS XX TO XX
6. FOR DECK GEOMETRY, SEE SHEETS XX TO XX
7. FOR SCUPPER AND JUNCTION BOX LOCATIONS, SEE DECK PAVING PLANS.

0 10 30
Feet

NO.	REVISION	DATE	BY

WEST VIRGINIA DEPARTMENT OF TRANSPORTATION
DIVISION OF HIGHWAYS
ENGINEERING DIVISION

I-64 OVER KANAWHA RIVER
EUGENE A. CARTER MEMORIAL BRIDGE +3

GENERAL PLAN & ELEV (5 OF 15)
RAMP D ELEV

DESIGNED	ANM	DATE	09/25
DRAWN	SCN		09/25
CHECKED			
REVIEWED			

HDR ENGINEERING INC.
CONSULTING ENGINEERS
CHARLESTON, WV
681-341-6100

SHEET OF
BRIDGE NO. 2563.6

SNOLEN $DD-MMM-YYYY HH:MM$ pw://pwhdruseas02.intranet.hdr:HDR_US_East_02/Documents/WV_DOT/WVDOT-Eugene_Carter_Bridge_3/6.0_CAD_BIM/6.2_WIP/HDR/6.2.2_Sheet_Files/23_Structure/1.006 General Elevation Ramp D.dgn

PROJECT NUMBERS		DISTRICT	COUNTY	SHEET NO.	TOTAL
STATE	FEDERAL				
S320-64-57.44 00	NHPP-0064 (497)D	1	KANAWHA		

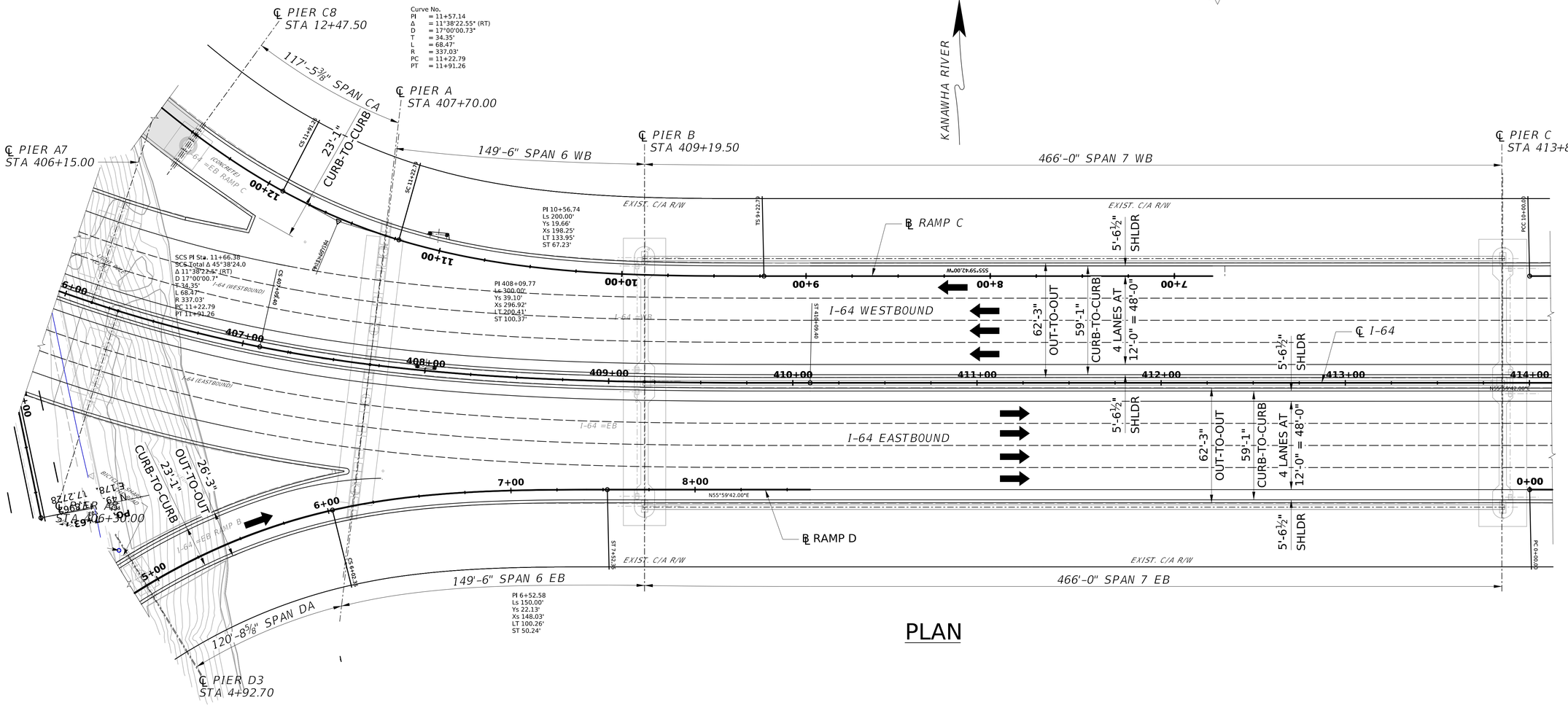

NOTES:

1. FOR GENERAL NOTES, SEE SHEETS XX THRU XX
2. FOR INDEX OF SHEETS, SEE SHEETS XX AND XX
3. HORIZONTAL AND VERTICAL BASELINE GEOMETRY AND SUPERELEVATIONS INFORMATION, SEE ROADWAY SHEETS.
4. FOR TYPICAL SECTIONS, SEE SHEETS XX THRU XX
5. FOR FRAMING PLAN, SEE SHEETS XX TO XX
6. FOR DECK GEOMETRY, SEE SHEETS XX TO XX
7. FOR SCUPPER AND JUNCTION BOX LOCATIONS, SEE DECK PAVING PLANS.

0 10 30
Feet

NO.	REVISION	DATE	BY

WEST VIRGINIA DEPARTMENT OF TRANSPORTATION
DIVISION OF HIGHWAYS
ENGINEERING DIVISION

I-64 OVER KANAWHA RIVER
EUGENE A. CARTER MEMORIAL BRIDGE +3

GENERAL PLAN & ELEV (6 OF 15)
MAIN SPAN PLAN

DESIGNED	DATE
ANM	09/25
DRAWN	
SCN	09/25
CHECKED	
REVIEWED	

HDR ENGINEERING INC.
CONSULTING ENGINEERS
CHARLESTON, WV
681-341-6100

SHEET OF
BRIDGE NO. 2563.6

pw://pwhdruseas02.intranet.hdr:HDR_US_East_02/Documents/WV_DOT/WVDOT-Eugene_Carter_Bridge_3/6.0_CAD_BIM/6.2_WIP/HDR/6.2.2_Sheet_Files/23_Structure/1.007 General Plan.dgn
$DD-MMM-YYYY HH:MM$
SNOLEN

PROJECT NUMBERS		DISTRICT	COUNTY	SHEET NO.	TOTAL
STATE	FEDERAL				
S320-64-57.44 00	NHPP-0064 (497)D	1	KANAWHA		

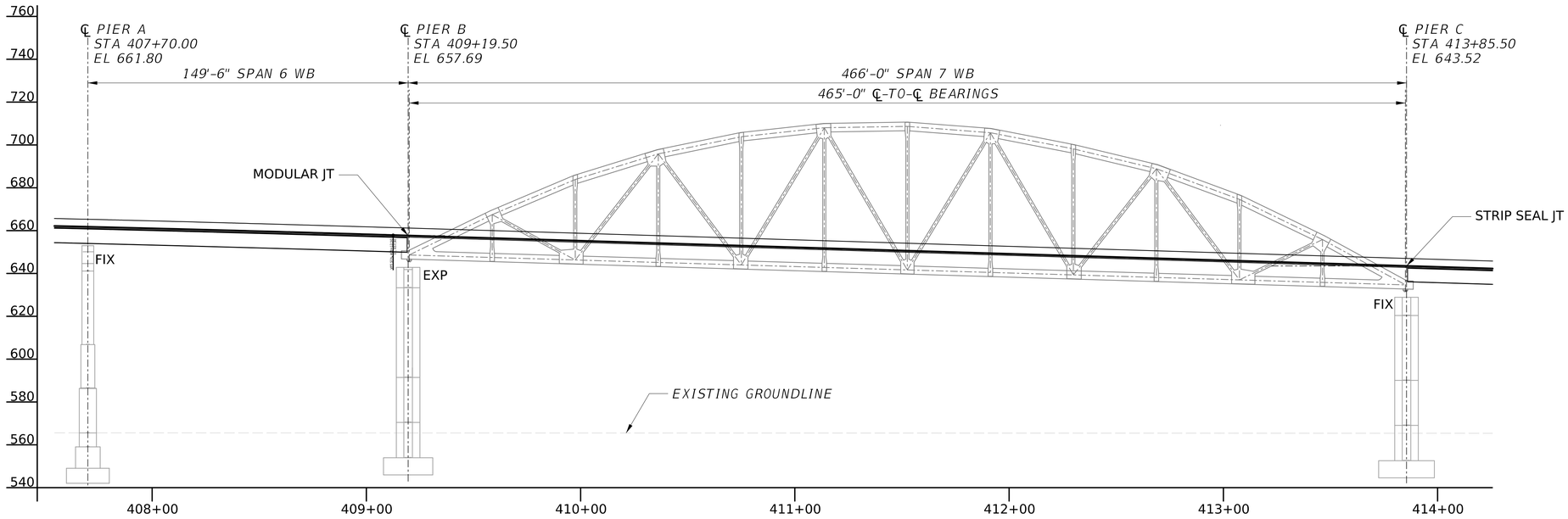

ELEVATION

NOTES:

1. FOR GENERAL NOTES, SEE SHEETS XX THRU XX
2. FOR INDEX OF SHEETS, SEE SHEETS XX AND XX
3. HORIZONTAL AND VERTICAL BASELINE GEOMETRY AND SUPERELEVATIONS INFORMATION, SEE ROADWAY SHEETS.
4. FOR TYPICAL SECTIONS, SEE SHEETS XX THRU XX
5. FOR FRAMING PLAN, SEE SHEETS XX TO XX
6. FOR DECK GEOMETRY, SEE SHEETS XX TO XX
7. FOR SCUPPER AND JUNCTION BOX LOCATIONS, SEE DECK PAVING PLANS.

0 10 30
Feet

NO.	REVISION	DATE	BY

WEST VIRGINIA DEPARTMENT OF TRANSPORTATION
DIVISION OF HIGHWAYS
ENGINEERING DIVISION

I-64 OVER KANAWHA RIVER
EUGENE A. CARTER MEMORIAL BRIDGE +3
GENERAL PLAN & ELEV (7 OF 15)
MAIN SPAN WB ELEV

DESIGNED	DATE
ANM	09/25
DRAWN	
SCN	09/25
CHECKED	
REVIEWED	

HDR ENGINEERING INC.
CONSULTING ENGINEERS
CHARLESTON, WV
681-341-6100

SHEET OF
BRIDGE NO. 2563.6

SNOLEN $DD-MMM-YYYY HH:MM$ pw://pwhdruseas02.intranet.hdr:HDR_US_East_02/Documents/WV_DOT/WVDOT-Eugene_Carter_Bridge_3/6.0_CAD_BIM/6.2_WIP/HDR/6.2.2_Sheet_Files/23_Structure/1.008 General Elevation WB.dgn

PROJECT NUMBERS		DISTRICT	COUNTY	SHEET NO.	TOTAL
STATE	FEDERAL				
S320-64-57.44 00	NHPP-0064 (497)D	1	KANAWHA		

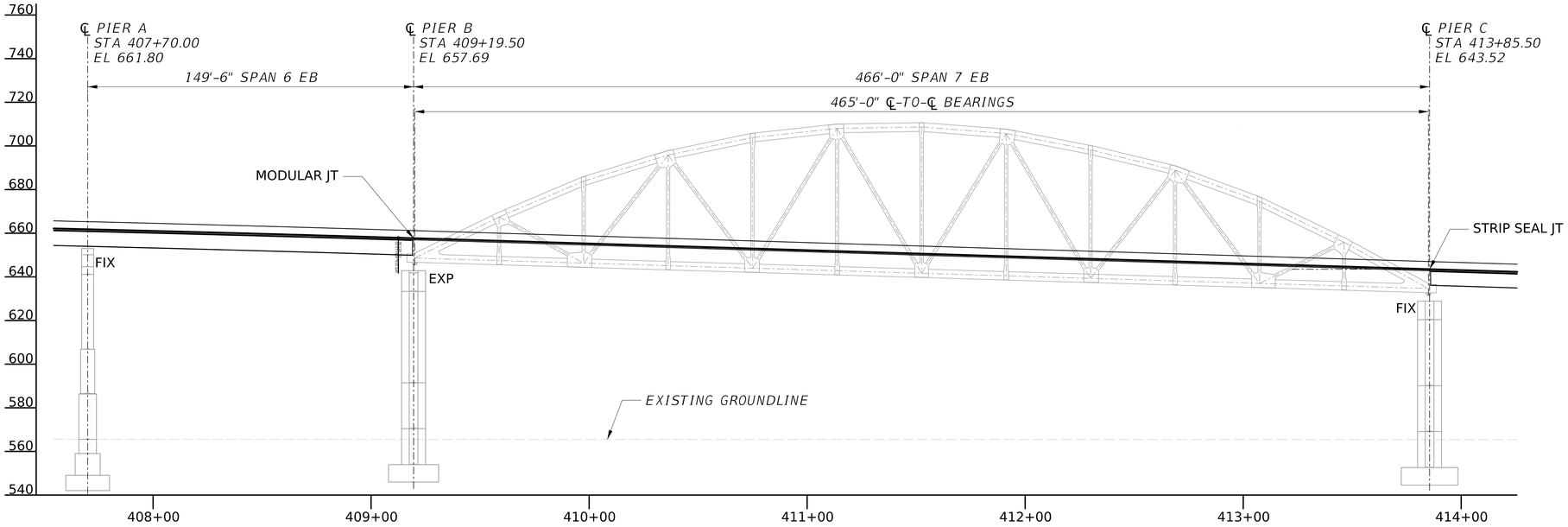

ELEVATION

NOTES:

1. FOR GENERAL NOTES, SEE SHEETS XX THRU XX
2. FOR INDEX OF SHEETS, SEE SHEETS XX AND XX
3. HORIZONTAL AND VERTICAL BASELINE GEOMETRY AND SUPERELEVATIONS INFORMATION, SEE ROADWAY SHEETS.
4. FOR TYPICAL SECTIONS, SEE SHEETS XX THRU XX
5. FOR FRAMING PLAN, SEE SHEETS XX TO XX
6. FOR DECK GEOMETRY, SEE SHEETS XX TO XX
7. FOR SCUPPER AND JUNCTION BOX LOCATIONS, SEE DECK PAVING PLANS.

0 10 30
Feet

NO.	REVISION	DATE	BY

WEST VIRGINIA DEPARTMENT OF TRANSPORTATION
DIVISION OF HIGHWAYS
ENGINEERING DIVISION

I-64 OVER KANAWHA RIVER
EUGENE A. CARTER MEMORIAL BRIDGE +3
GENERAL PLAN & ELEV (8 OF 15)
MAIN SPAN EB ELEV

DESIGNED	DATE
ANM	09/25
DRAWN	
SCN	09/25
CHECKED	
REVIEWED	

HDR ENGINEERING INC.
CONSULTING ENGINEERS
CHARLESTON, WV
681-341-6100

SHEET OF
BRIDGE NO. 2563.6

$DD-MMM-YYYY HH:MM$
pw://pwhdruseas02.intranet.hdr:HDR_US_East_02/Documents/WV_DOT/WVDOT-Eugene_Carter_Bridge_3/6.0_CAD_BIM/6.2_WIP/HDR/6.2.2_Sheet_Files/23_Structure/1.009 General Elevation EB.dgn
SNOLEN

PROJECT NUMBERS		DISTRICT	COUNTY	SHEET NO.	TOTAL
STATE	FEDERAL				
S320-64-57.44 00	NHPP-0064 (497)D	1	KANAWHA		

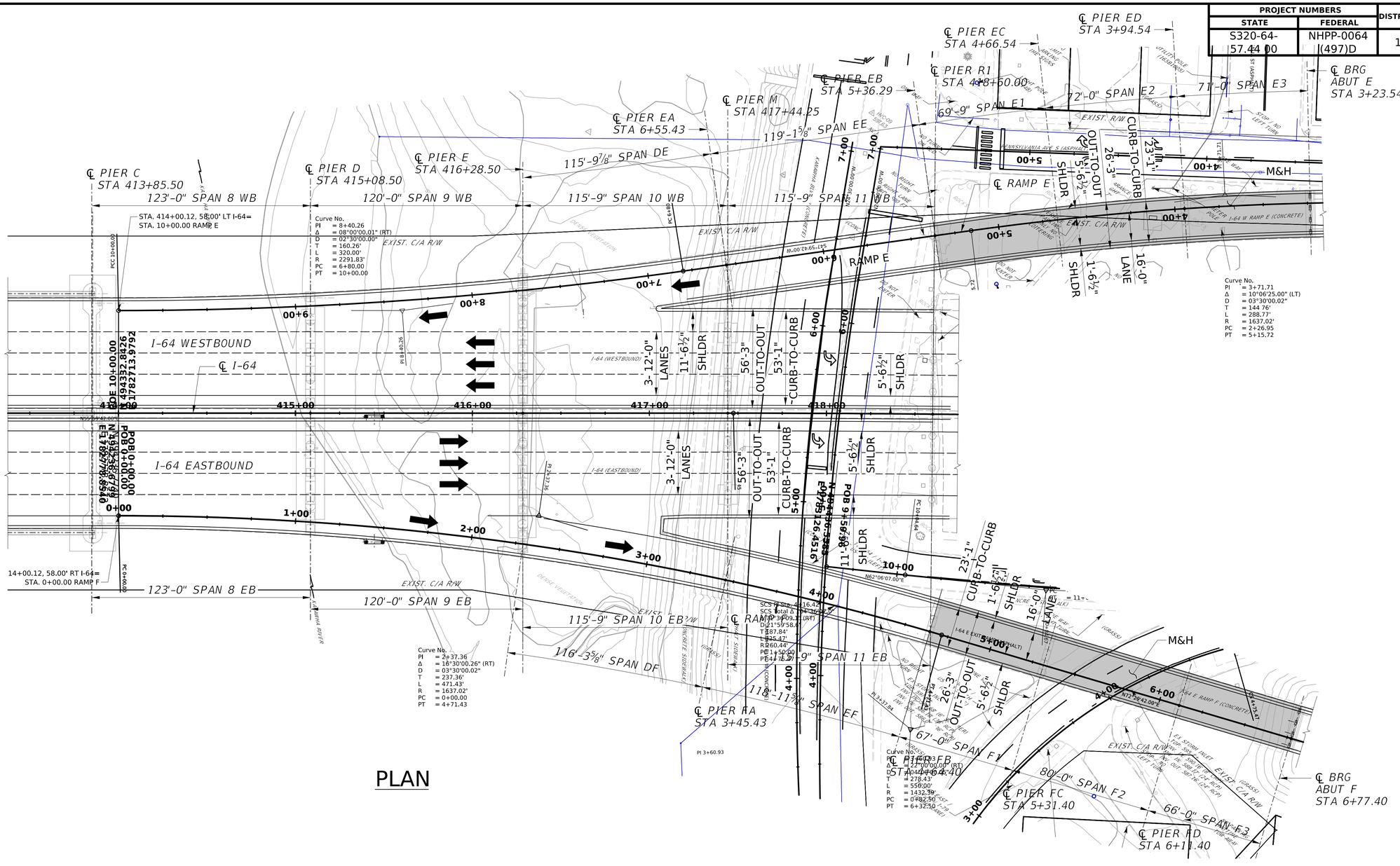
℄ PIER C
STA 413+85.50
123'-0" SPAN 8 WB
℄ PIER D
STA 415+08.50
120'-0" SPAN 9 WB
℄ PIER E
STA 416+28.50
115'-9 7/8" SPAN DE
℄ PIER EA
STA 6+55.43
℄ PIER M
STA 417+44.25
119'-1 5/16" SPAN EE
115'-9" SPAN 10 WB
℄ PIER EB
STA 5+36.29
115'-9" SPAN 11 WB
℄ PIER EC
STA 4+66.54
℄ PIER R1
STA 4+48+50.00
69'-9" SPAN E1
72'-0" SPAN E2
71'-0" SPAN E3
℄ PIER ED
STA 3+94.54
℄ BRG
ABUT E
STA 3+23.54
STA. 414+00.12, 58.00' LT I-64=
STA. 10+00.00 RAMP E
Curve No.
PI = 8+40.26
Δ = 08°00'00.01" (RT)
D = 02°30'00.00"
T = 160.26'
L = 320.00'
R = 2291.83'
PC = 6+80.00
PT = 10+00.00
EXIST. C/A R/W
I-64 WESTBOUND
℄ I-64
I-64 EASTBOUND
RAMP E
℄ RAMP E
℄ RAMP F
3- 12'-0" LANES
11'-6½" SHLDR
56'-3" OUT-TO-OUT
53'-1" CURB-TO-CURB
5'-6½" SHLDR
23'-1" CURB-TO-CURB
1'-6½" SHLDR
16'-0" LANE
26'-3" CURB-TO-CURB
5'-6½" OUT-TO-OUT
SHLDR
1'-6½" SHLDR
16'-0" LANE
M&H
PCC 10+00.00
POB 10+00.00
N 1494332.8426
E 1782713.9792
POB 0+00.00
N 1494332.8426
E 1782713.9792
POB 0+00.00
N 1494332.8426
E 1782713.9792
N62°06'07.00"E
N62°06'07.00"E
N62°06'07.00"E

PROJECT NUMBERS		DISTRICT	COUNTY	SHEET NO.	TOTAL
STATE	FEDERAL				
S320-64-57.44 00	NHPP-0064 (497)D	1	KANAWHA		

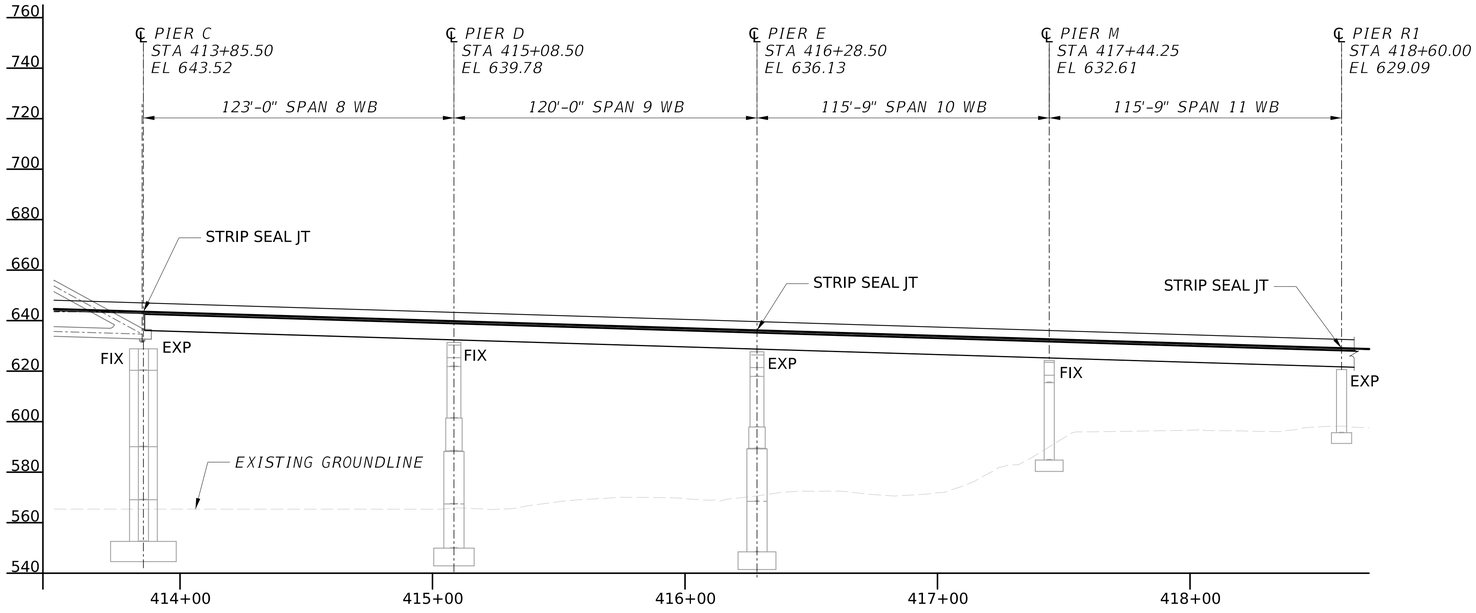

ELEVATION

NOTES:

1. FOR GENERAL NOTES, SEE SHEETS XX THRU XX
2. FOR INDEX OF SHEETS, SEE SHEETS XX AND XX
3. HORIZONTAL AND VERTICAL BASELINE GEOMETRY AND SUPERELEVATIONS INFORMATION, SEE ROADWAY SHEETS.
4. FOR TYPICAL SECTIONS, SEE SHEETS XX THRU XX
5. FOR FRAMING PLAN, SEE SHEETS XX TO XX
6. FOR DECK GEOMETRY, SEE SHEETS XX TO XX
7. FOR SCUPPER AND JUNCTION BOX LOCATIONS, SEE DECK PAVING PLANS.

0 10 30
Feet

NO.	REVISION	DATE	BY

WEST VIRGINIA DEPARTMENT OF TRANSPORTATION
DIVISION OF HIGHWAYS
ENGINEERING DIVISION

I-64 OVER KANAWHA RIVER
EUGENE A. CARTER MEMORIAL BRIDGE +3
GENERAL PLAN & ELEV (10 OF 15)
EAST APPROACH WB ELEV

DESIGNED	ANM	DATE	09/25
DRAWN	SCN		09/25
CHECKED			
REVIEWED			

HDR ENGINEERING INC.
CONSULTING ENGINEERS
CHARLESTON, WV
681-341-6100

SHEET OF
BRIDGE NO. 2563.6

SNOLEN $DD-MMM-YYYY HH:MM$ pw://pwhdruseas02.intranet.hdr-HDR_US_East_02/Documents/WV_DOT/WVDOT-Eugene_Carter_Bridge_3/6.0_CAD_BIM/6.2_WIP/HDR/6.2.2_Sheet_Files/23_Structure/1.011 General Elevation WB.dgn

PROJECT NUMBERS		DISTRICT	COUNTY	SHEET NO.	TOTAL
STATE	FEDERAL				
S320-64-57.44 00	NHPP-0064 (497)D	1	KANAWHA		

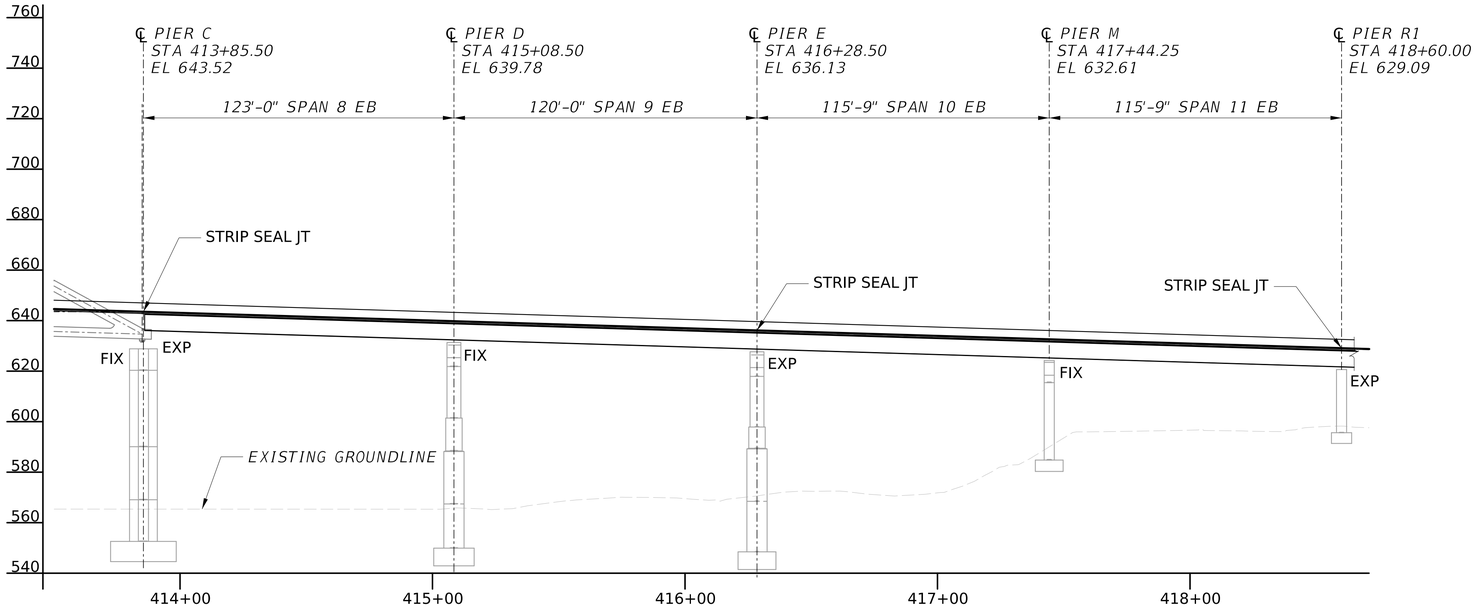

ELEVATION

NOTES:

1. FOR GENERAL NOTES, SEE SHEETS XX THRU XX
2. FOR INDEX OF SHEETS, SEE SHEETS XX AND XX
3. HORIZONTAL AND VERTICAL BASELINE GEOMETRY AND SUPERELEVATIONS INFORMATION, SEE ROADWAY SHEETS.
4. FOR TYPICAL SECTIONS, SEE SHEETS XX THRU XX
5. FOR FRAMING PLAN, SEE SHEETS XX TO XX
6. FOR DECK GEOMETRY, SEE SHEETS XX TO XX
7. FOR SCUPPER AND JUNCTION BOX LOCATIONS, SEE DECK PAVING PLANS.

0 10 30
Feet

NO.	REVISION	DATE	BY

WEST VIRGINIA DEPARTMENT OF TRANSPORTATION
DIVISION OF HIGHWAYS
ENGINEERING DIVISION

I-64 OVER KANAWHA RIVER
EUGENE A. CARTER MEMORIAL BRIDGE +3
GENERAL PLAN & ELEV (11 OF 15)
EAST APPROACH EB ELEV

DESIGNED	ANM	DATE	09/25
DRAWN	SCN		09/25
CHECKED			
REVIEWED			

HDR ENGINEERING INC.
CONSULTING ENGINEERS
CHARLESTON, WV
681-341-6100

SHEET OF
BRIDGE NO. 2563.6

SNOLEN $DD-MMM-YYYY HH:MM$ pw://pwhdruseas02.intranet.hdr:HDR_US_East_02/Documents/WV_DOT/WVDOT-Eugene_Carter_Bridge_3/6.0_CAD_BIM/6.2_WIP/HDR/6.2.2_Sheet_Files/23_Structure/1.012 General Elevation EB.dgn

PROJECT NUMBERS		DISTRICT	COUNTY	SHEET NO.	TOTAL
STATE	FEDERAL				
S320-64-57.44 00	NHPP-0064 (497)D	1	KANAWHA		

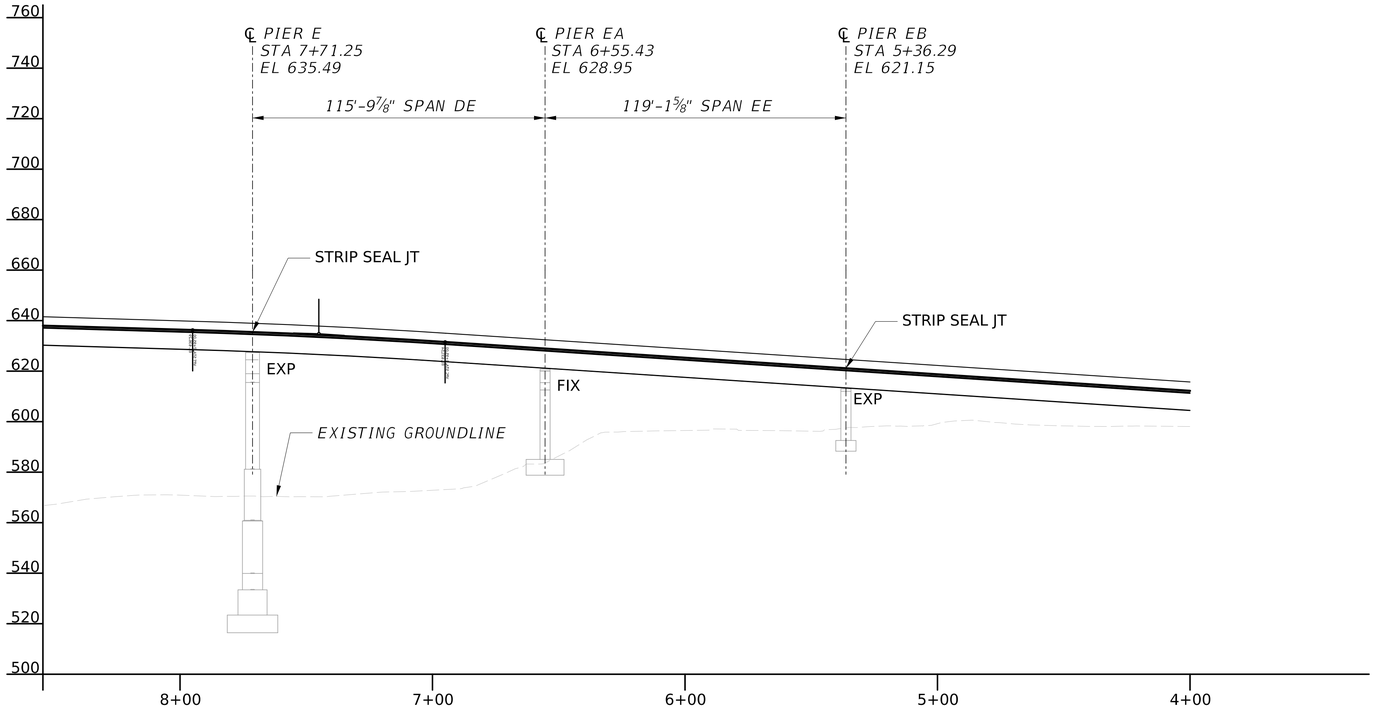

ELEVATION RAMP E

NOTES:

1. FOR GENERAL NOTES, SEE SHEETS XX THRU XX
2. FOR INDEX OF SHEETS, SEE SHEETS XX AND XX
3. HORIZONTAL AND VERTICAL BASELINE GEOMETRY AND SUPERELEVATIONS INFORMATION, SEE ROADWAY SHEETS.
4. FOR TYPICAL SECTIONS, SEE SHEETS XX THRU XX
5. FOR FRAMING PLAN, SEE SHEETS XX TO XX
6. FOR DECK GEOMETRY, SEE SHEETS XX TO XX
7. FOR SCUPPER AND JUNCTION BOX LOCATIONS, SEE DECK PAVING PLANS.

0 10 30
Feet

NO.	REVISION	DATE	BY

WEST VIRGINIA DEPARTMENT OF TRANSPORTATION
DIVISION OF HIGHWAYS
ENGINEERING DIVISION

I-64 OVER KANAWHA RIVER
EUGENE A. CARTER MEMORIAL BRIDGE +3
GENERAL PLAN & ELEV (12 OF 15)
EAST APPR RAMP E STUB ELEV

DESIGNED	DATE
ANM	09/25
DRAWN	
SCN	09/25
CHECKED	
REVIEWED	

HDR ENGINEERING INC.
CONSULTING ENGINEERS
CHARLESTON, WV
681-341-6100

SHEET OF
BRIDGE NO. 2563.6

SNOLEN $DD-MMM-YYYY HH:MM$ pw://pwhdruseas02.intranet.hdr:HDR_US_East_02/Documents/WV_DOT/WVDOT-Eugene_Carter_Bridge_3/6.0_CAD_BIM/6.2_WIP/HDR/6.2.2_Sheet_Files/23_Structure/1.012a General ElevationRamp E.dgn

PROJECT NUMBERS		DISTRICT	COUNTY	SHEET NO.	TOTAL
STATE	FEDERAL				
S320-64-57.44 00	NHPP-0064 (497)D	1	KANAWHA		

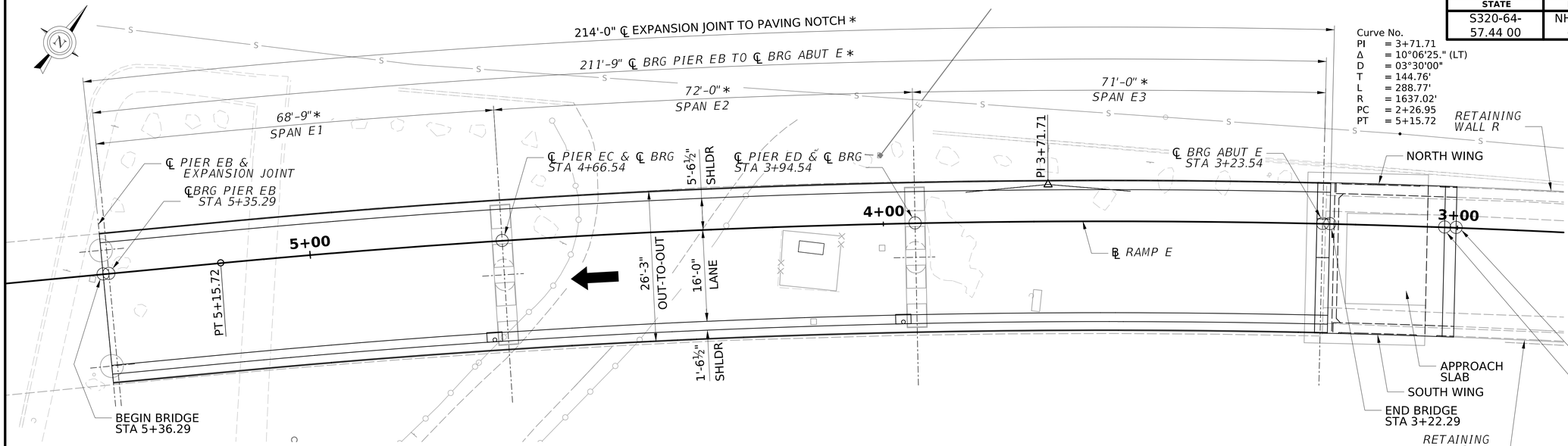

Curve No.
PI = 3+71.71
Δ = 10°06'25." (LT)
D = 03°30'00"
T = 144.76'
L = 288.77'
R = 1637.02'
PC = 2+26.95
PT = 5+15.72

PLAN

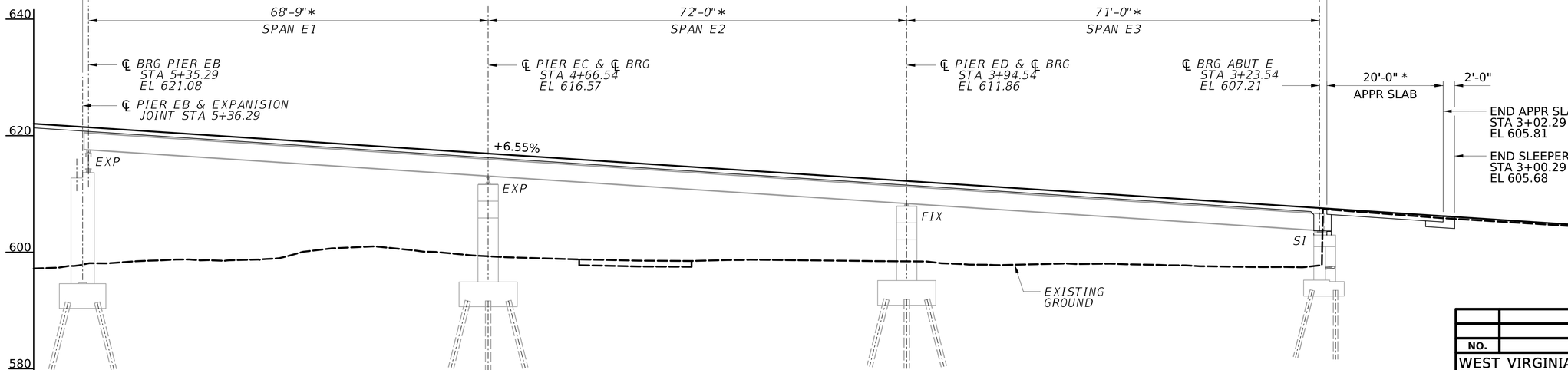

ELEVATION

* - MEASURED ALONG ℄ RAMP E

0 2 10 Feet

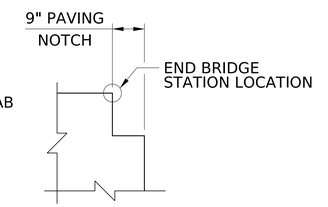

DETAIL 1

NOT TO SCALE

SCOPE OF WORK:

- REPLACE EXPANSION BEARINGS PIER EC AND ABUTMENT E
- CLEAN AND LUBRICATE BEARINGS AT PIER ED AND CROSS GIRDER BEARINGS AT PIER EB
- REPLACE EXPANSION JOINT AT PIER EB
- REPAIR/STRENGTHEN STRUCTURAL STEEL
- INSTALL SHEAR STUDS
- REPLACE DECK AND BARRIERS
- SPOT PAINT STRUCTURAL STEEL
- REPAIR/REPLACE DRAINAGE SYSTEM
- MODIFY ABUTMENT AND REPLACE APPROACH SLAB

NOTES:

1. FOR GENERAL NOTES, SEE SHEETS XX THRU XX.
2. FOR INDEX OF SHEETS SEE SHEETS XX AND XX.
3. FOR HORIZONTAL AND VERTICAL BASELINE GEOMETRY AND SUPERELEVATION INFORMATION, SEE ROADWAY SHEETS.
4. FOR TYPICAL SECTIONS, SEE SHEET XX.
5. FOR FRAMING PLAN, SEE SHEET XX.
6. FOR DECK GEOMETRY, SEE SHEETS XX TO XX.
7. FOR SCUPPER AND JUNCTION BOX LOCATIONS, SEE DECK PAVING PLANS.

NO.	REVISION	DATE	BY

WEST VIRGINIA DEPARTMENT OF TRANSPORTATION
DIVISION OF HIGHWAYS
ENGINEERING DIVISION

I-64 OVER KANAWHA RIVER
EUGENE A. CARTER MEMORIAL BRIDGE +3

GENERAL PLAN & ELEVATION

(13 of 15) - RAMP E

DESIGNED	MAB	DATE	12/25
DRAWN	DJC		12/25
CHECKED			
REVIEWED			

Mead & Hunt

MEAD & HUNT INC.
CONSULTING ENGINEERS
CHARLESTON, WV
304-345-6712

SHEET OF

BRIDGE NO. 2563.6

X:\32416001\251911.01\TECH\Structures\Ramp E\sheets\str_gen_001_Ramp E_Eugene Carter Memorial Bridge.dgn
$DD-MMM-YYYY HH:MM$
1420djc

PROJECT NUMBERS		DISTRICT	COUNTY	SHEET NO.	TOTAL
STATE	FEDERAL				
S320-64-57.44 00	NHPP-0064 (497)D	1	KANAWHA		

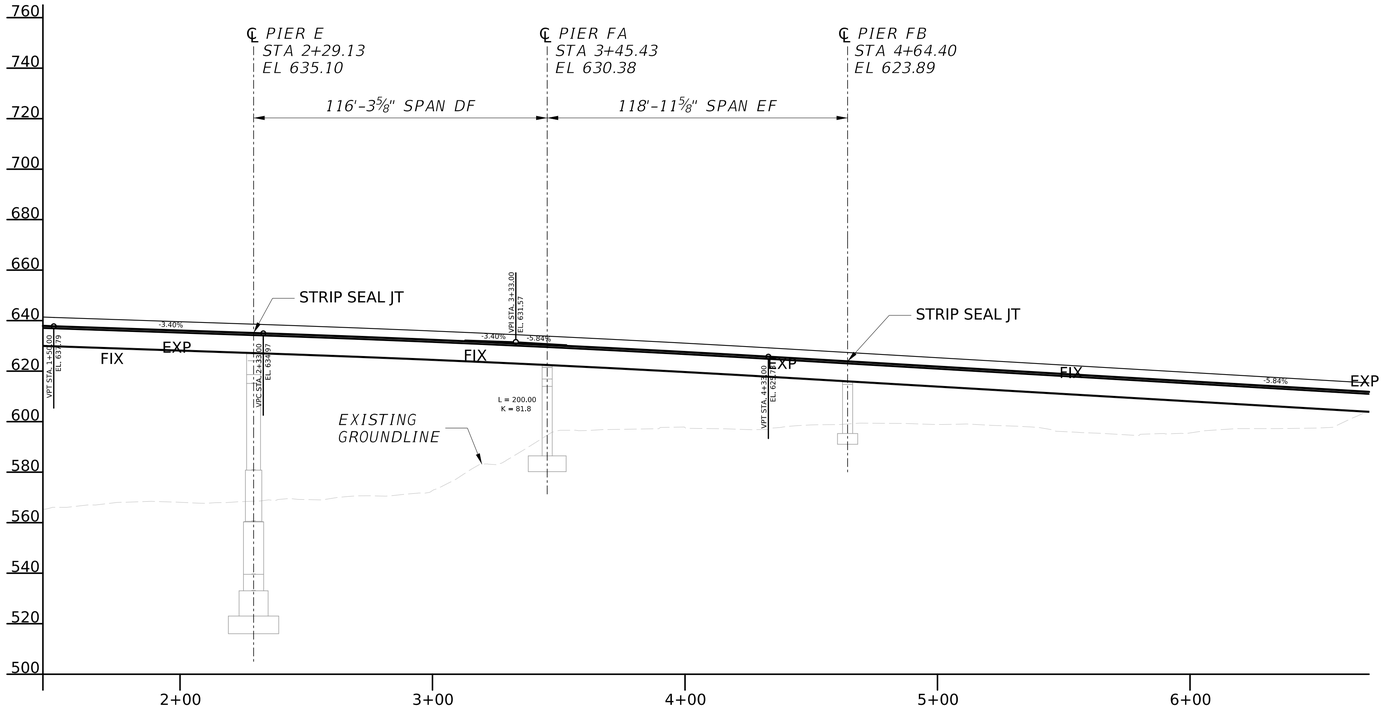

ELEVATION RAMP F

NOTES:

1. FOR GENERAL NOTES, SEE SHEETS XX THRU XX
2. FOR INDEX OF SHEETS, SEE SHEETS XX AND XX
3. HORIZONTAL AND VERTICAL BASELINE GEOMETRY AND SUPERELEVATIONS INFORMATION, SEE ROADWAY SHEETS.
4. FOR TYPICAL SECTIONS, SEE SHEETS XX THRU XX
5. FOR FRAMING PLAN, SEE SHEETS XX TO XX
6. FOR DECK GEOMETRY, SEE SHEETS XX TO XX
7. FOR SCUPPER AND JUNCTION BOX LOCATIONS, SEE DECK PAVING PLANS.

0 10 30
Feet

NO.	REVISION	DATE	BY

WEST VIRGINIA DEPARTMENT OF TRANSPORTATION
DIVISION OF HIGHWAYS
ENGINEERING DIVISION

I-64 OVER KANAWHA RIVER
EUGENE A. CARTER MEMORIAL BRIDGE +3
GENERAL PLAN & ELEV (14 OF 15)
EAST APPR RAMP F STUB ELEV

DESIGNED	DATE
ANM	09/25
DRAWN	
SCN	09/25
CHECKED	
REVIEWED	

HDR ENGINEERING INC.
CONSULTING ENGINEERS
CHARLESTON, WV
681-341-6100

SHEET
OF
BRIDGE NO.
2563.6

$DD-MMM-YYYY HH:MM$ pw://pwhdruseas02.intranet.hdr:HDR_US_East_02/Documents/WV_DOT/WVDOT-Eugene_Carter_Bridge_3/6.0_CAD_BIM/6.2_WIP/HDR/6.2.2_Sheet_Files/23_Structure/1.012b General ElevationRamp F.dgn SNOLEN

PROJECT NUMBERS		DISTRICT	COUNTY	SHEET NO.	TOTAL
STATE	FEDERAL				
S320-64-57.44 00	NHPP-0064 (497)D	1	KANAWHA		

214'-3" ℄ EXPANSION JOINT TO PAVING NOTCH

212'-0" ℄ BRG PIER FB TO ℄ BRG ABUT F

66'-0" SPAN F1 | 80'-0" SPAN F2 | 66'-0" SPAN F3

℄ BRG PIER FB STA 4+65.40

℄ PIER FB & EXPANSION JOINT

℄ PIER FC & ℄ BRG STA 5+31.40

℄ PIER FD & ℄ BRG STA 6+11.40

℄ BRG ABUT F STA 6+77.40

1'-6½" SHLDR

26'-3" OUT-TO-OUT

16'-0" LANE

5'-6½" SHLDR

90°00'00" (TYP)

℄ RAMP F

N72°29'42.00"E

BEGIN BRIDGE STA 4+64.40

5+00

6+00

7+00

PT 4+71.43

END BRIDGE STA 6+78.65

TS 6+85.64

WING F1

WING F2

APPROACH SLAB

END SLEEPER SLAB STA 7+00.65

END APPR SLAB STA 6+98.65

PLAN

BEGIN BRIDGE STA 4+64.40 EL 623.89

214'-3" ℄ EXPANSION JOINT TO PAVING NOTCH

212'-0" ℄ BRG PIER FB TO ℄ BRG ABUT F

66'-0" SPAN F1 | 80'-0" SPAN F2 | 66'-0" SPAN F3

END BRIDGE (SEE DETAIL 1) STA 6+78.65 EL 611.38

640

620

600

580

560

℄ BRG PIER FB STA 4+65.40 EL 623.84

℄ PIER FB & EXPANSION JOINT STA 4+64.40

℄ PIER FC & ℄ BRG STA 5+31.40 EL 619.98

℄ PIER FD & ℄ BRG STA 6+11.40 EL 615.31

℄ BRG ABUT F STA 6+77.40 EL 611.45

EXP

EXP

FIX

SI

-5.84%

EXISTING GROUND

20'-0" APPR SLAB

2'-0"

END APPR SLAB STA 6+98.65 EL 610.21

END SLEEPER SLAB STA 7+00.65 EL 610.09

5+00

6+00

0 2 10 Feet

ELEVATION

9" PAVING NOTCH

END BRIDGE STATION LOCATION

DETAIL 1

NOT TO SCALE

SCOPE OF WORK:

- REPLACE EXPANSION BEARINGS PIER FC AND ABUTMENT F
- CLEAN AND LUBRICATE BEARINGS AT PIER FD AND CROSS GIRDER BEARINGS AT PIER FB
- REPLACE EXPANSION JOINT AT PIER FB
- REPAIR/STRENGTHEN STRUCTURAL STEEL
- INSTALL SHEAR STUDS
- REPLACE DECK AND BARRIERS
- SPOT PAINT STRUCTURAL STEEL
- REPAIR/REPLACE DRAINAGE SYSTEM
- MODIFY ABUTMENT AND REPLACE APPROACH SLAB

NOTES:

1. FOR GENERAL NOTES, SEE SHEETS XX THRU XX.
2. FOR INDEX OF SHEETS SEE SHEETS XX AND XX.
3. FOR HORIZONTAL AND VERTICAL BASELINE GEOMETRY AND SUPERELEVATION INFORMATION, SEE ROADWAY SHEETS.
4. FOR TYPICAL SECTIONS, SEE SHEET XX.
5. FOR FRAMING PLAN, SEE SHEET XX.
6. FOR DECK GEOMETRY, SEE SHEETS XX TO XX.
7. FOR SCUPPER AND JUNCTION BOX LOCATIONS, SEE DECK PAVING PLANS.

NO.	REVISION	DATE	BY

WEST VIRGINIA DEPARTMENT OF TRANSPORTATION
DIVISION OF HIGHWAYS
ENGINEERING DIVISION

I-64 OVER KANAWHA RIVER
EUGENE A. CARTER MEMORIAL BRIDGE +3

GENERAL PLAN & ELEVATION
(15 of 15) - RAMP F

DESIGNED	MAB	DATE	12/25
DRAWN	DJC		12/25
CHECKED			
REVIEWED			

Mead & Hunt

MEAD & HUNT INC.
CONSULTING ENGINEERS
CHARLESTON, WV
304-345-6712

SHEET OF

BRIDGE NO. 2563.6

X:\324160025191 1.01\TECH\Structures\Ramp F\sheets\str_gen_001_Ramp F_Eugene Carter Memorial Bridge.dgn

$DD-MMM-YYYY HH:MM$

1420djc

SHEET NUMBER	SHEET TITLE
1	General Plan & Elev. (1 of 15) - West Approach Plan
2	General Plan & Elev. (2 of 15) - West Approach WB Elev.
3	General Plan & Elev. (3 of 15) - West Approach EB Elev.
4	General Plan & Elev. (4 of 15) - Ramp D Plan
5	General Plan & Elev. (5 of 15) - Ramp D Elev.
6	General Plan & Elev. (6 of 15) - Main Span Plan
7	General Plan & Elev. (7 of 15) - Main Span WB Elev.
8	General Plan & Elev. (8 of 15) - Main Span EB Elev.
9	General Plan & Elev. (9 of 15) - East Approach Plan
10	General Plan & Elev. (10 of 15) - East Approach WB Elev.
11	General Plan & Elev. (11 of 15) - East Approach EB Elev.
12	General Plan & Elev. (12 of 15) - East Approach Ramp E Stub Elev.
13	General Plan & Elevation (13 of 15) - Ramp E
14	General Plan & Elev. (14 of 15) - East Approach Ramp F Stub Elev.
15	General Plan & Elevation (15 of 15) - Ramp F
16	Index of Sheets (1 of 3)
17	Index of Sheets (2 of 3)
18	Index of Sheets (3 of 3)
19	Key Plan (1 of 2)
20	Key Plan (2 of 2) Span 5 & 6
21	Typical Sections Spans 1 - 4
22	Typical Sections Span 5
23	Typical Sections Span CA
24	Typical Sections Spans 5 (WB) & CA
25	Typical Sections Spans 6 (WB) & CA
26	Typical Sections Ramp D
27	Typical Sections Span 6 (EB) (1 of 2)
28	Typical Sections Span 6 (EB) (2 of 2)
29	Typical Sections Span 7 (1 of 2)
30	Typical Sections Span 7 (2 of 2)
31	Typical Sections Span 8
32	Typical Sections Span 9 (WB)
33	Typical Sections Span 9 (EB)
34	Typical Sections Span 10
35	Typical Sections Span 11
36	Typical Sections Ramp E, Spans DE & EE
37	Typical Sections Ramp E, Spans E1 - E3
38	Typical Sections Ramp F, Spans DF & EF
39	Typical Sections Ramp F, Spans F1 - F3
40	General Notes (1 of 4)
41	General Notes (2 of 4)
42	General Notes (3 of 4)
43	General Notes (4 of 4)
44	Summary of Quantities (1 of 5)
45	Summary of Quantities (2 of 5)
46	Summary of Quantities (3 of 5)
47	Summary of Quantities (4 of 5)
48	Summary of Quantities (5 of 5)
49	Construction Phasing (1 of 2)
50	Construction Phasing (2 of 2)
51	Repair Callout Key (1 of 3)
52	Repair Callout Key (2 of 3)
53	Repair Callout Key (3 of 3)
54	Substructure Repairs Abutment AW (1 of 3)
55	Substructure Repairs Abutment AW (2 of 3)

SHEET NUMBER	SHEET TITLE
56	Substructure Repairs Abutment AW (3 of 3)
57	Substructure Repairs Abutment AE (1 of 2)
58	Substructure Repairs Abutment AE (2 of 2)
59	Substructure Repairs Abutment C Removal (1 of 2)
60	Substructure Repairs Abutment C Removal (2 of 2)
61	Substructure Repairs Abutment C Proposed (1 of 4)
62	Substructure Repairs Abutment C Proposed (2 of 4)
63	Substructure Repairs Abutment C Proposed (3 of 4)
64	Substructure Repairs Abutment C Proposed (4 of 4)
65	Substructure Repairs Abutment D Removal (1 of 2)
66	Substructure Repairs Abutment D Removal (2 of 2)
67	Substructure Repairs Abutment D Proposed (1 of 4)
68	Substructure Repairs Abutment D Proposed (2 of 4)
69	Substructure Repairs Abutment D Proposed (3 of 4)
70	Substructure Repairs Abutment D Proposed (4 of 4)
71	Substructure Repairs Abutment E Removal (1 of 2)
72	Substructure Repairs Abutment E Removal (2 of 2)
73	Substructure Repairs Abutment E Proposed (1 of 4)
74	Substructure Repairs Abutment E Proposed (2 of 4)
75	Substructure Repairs Abutment E Proposed (3 of 4)
76	Substructure Repairs Abutment E Proposed (4 of 4)
77	Substructure Repairs Abutment F Removal (1 of 2)
78	Substructure Repairs Abutment F Removal (2 of 2)
79	Substructure Repairs Abutment F Proposed (1 of 4)
80	Substructure Repairs Abutment F Proposed (2 of 4)
81	Substructure Repairs Abutment F Proposed (3 of 4)
82	Substructure Repairs Abutment F Proposed (4 of 4)
83	Substructure Repair Pier A1
84	Substructure Repair Pier A2
85	Substructure Repair Pier A3 (1 of 2)
86	Substructure Repair Pier A3 (2 of 2)
87	Substructure Repair Pier A4 (1 of 2)
88	Substructure Repair Pier A4 (2 of 2)
89	Substructure Repair Pier A5 (1 of 2)
90	Substructure Repair Pier A5 (2 of 2)
91	Substructure Repair Pier A6 (1 of 2)
92	Substructure Repair Pier A6 (2 of 2)
93	Substructure Repair Pier A7 (1 of 2)
94	Substructure Repair Pier A7 (2 of 2)
95	Substructure Repair Pier A8 (1 of 2)
96	Substructure Repair Pier A8 (2 of 2)
97	Substructure Repair Pier A (1 of 2)
98	Substructure Repair Pier A (2 of 2)
99	Substructure Repair Pier B (1 of 2)
100	Substructure Repair Pier B (2 of 2)
101	Substructure Repair Pier C (1 of 2)
102	Substructure Repair Pier C (2 of 2)
103	Substructure Repair Pier D (1 of 2)
104	Substructure Repair Pier D (2 of 2)
105	Substructure Repair Pier E (1 of 2)
106	Substructure Repair Pier E (2 of 2)
107	Substructure Repair Pier M (1 of 2)
108	Substructure Repair Pier M (2 of 2)
109	Substructure Repair Pier R1 (1 of 2)
110	Substructure Repair Pier R1 (2 of 2)

PROJECT NUMBERS		DISTRICT	COUNTY	SHEET NO.	TOTAL
STATE	FEDERAL				
S320-64-57.44 00	NHPP-0064 (497)D	1	KANAWHA		

CURRENT SHEET LIST - MAY CHANGE

NO.	REVISION	DATE	BY

WEST VIRGINIA DEPARTMENT OF TRANSPORTATION
DIVISION OF HIGHWAYS
ENGINEERING DIVISION

I-64 OVER KANAWHA RIVER
EUGENE A. CARTER MEMORIAL BRIDGE +3

INDEX OF SHEETS
(1 OF 3)

DESIGNED	DATE
DRAWN	
CHECKED	
REVIEWED	

HDR ENGINEERING INC.
CONSULTING ENGINEERS
CHARLESTON, WV
681-341-6100

SHEET OF

BRIDGE NO. 2563.6

pw://pwhdruseas02.intranet.hdr:HDR_US_East_02/Documents/WV_DOT/WVDOT-Eugene_Carter_Bridge_3/6.0_CAD_BIM/6.2_WIP/HDR/6.2.2_Sheet_Files/23_Structure/Reference/str_ref_bdr_Eugene Carter Memorial.dgn
$DD-MMM-YYYY HH:MM$
SNOLEN

SHEET NUMBER	SHEET TITLE
111	Substructure Repair Pier D1 (1 of 2)
112	Substructure Repair Pier D1 (2 of 2)
113	Substructure Repair Pier D2 (1 of 2)
114	Substructure Repair Pier D2 (2 of 2)
115	Substructure Repair Pier D3 (1 of 2)
116	Substructure Repair Pier D3 (2 of 2)
117	Substructure Repair Pier EA (1 of 2)
118	Substructure Repair Pier EA (2 of 2)
119	Substructure Repair Pier EB
120	Substructure Repair Pier EC
121	Substructure Repair Pier ED
122	Substructure Repair Pier FA (1 of 2)
123	Substructure Repair Pier FA (2 of 2)
124	Substructure Repair Pier FB
125	Substructure Repair Pier FC
126	Substructure Repair Pier FD
127	Concrete Repair Details (1 of 3)
128	Concrete Repair Details (2 of 3)
129	Concrete Repair Details (3 of 3)
130	Framing Plan (EB) - Span 1 and Span 2
131	Framing Plan (EB) - Span 3 and Span 4
132	Framing Plan (EB) - Span 5, Span 6 and Span DA
133	Framing Plan - Ramp D
134	Framing Plan (EB) - Span 7 (1 of 2)
135	Framing Plan (EB) - Span 7 (2 of 2)
136	Framing Plan (EB) - Span 8 and Span 9
137	Framing Plan (EB) - Span 10, Span 11, Span DF and Span EF
138	Framing Plan (WB) - Span 1 and Span 2
139	Framing Plan (WB) - Span 3 and Span 4
140	Framing Plan (WB) - Span 5, Span 6 and Span CA
141	Framing Plan (WB) - Span 7 (1 of 2)
142	Framing Plan (WB) - Span 7 (2 of 2)
143	Framing Plan (WB) - Span 8 and Span 9
144	Framing Plan (WB) - Span 10, Span 11, Span DE and Span EE
145	Framing Plan - Ramp E Spans E1 - E3
146	Framing Plan - Ramp F Spans F1 - F3
147	Truss Framing (1 of 3)
148	Truss Framing (2 of 3)
149	Truss Framing (3 of 3)
150	Steel Repair S1 - Girder Local Deterioration
151	Steel Repair S3 - Floorbeam Local Deterioration
152	Steel Repair S4 - Lateral Bracing Local Deterioration
153	Steel Repair S5 - Diaphragm Repair
154	Steel Repair S5 - New Diaphragm Ramp E
155	Steel Repair S5 - New Diaphragm Ramp F
156	Steel Repair S6 - Strengthen Bearing Stiffener Ramps E & F
157	Steel Repair S7 - Field Splice (1 of 2)
158	Steel Repair S7 - Field Splice (2 of 2)
159	Steel Repair S8 - Shear Stud Layout EB (1 of 3)
160	Steel Repair S8 - Shear Stud Layout EB (2 of 3)
161	Steel Repair S8 - Shear Stud Layout EB (3 of 3)
162	Steel Repair S8 - Shear Stud Layout WB (1 of 3)
163	Steel Repair S8 - Shear Stud Layout WB (2 of 3)
164	Steel Repair S8 - Shear Stud Layout WB (3 of 3)
165	Steel Repair S8 - Shear Stud Layout Ramp D

SHEET NUMBER	SHEET TITLE
166	Steel Repair S8 - Shear Stud Layout Ramp E
167	Steel Repair S8 - Shear Stud Layout Ramp F
168	Steel Repair S12 - Truss Member Repair
169	Steel Repair S13 - Truss Gusset Repair
170	Steel Repair S14 - Miscellaneous Truss Repair (1 of 2)
171	Steel Repair S14 - Miscellaneous Truss Repair (2 of 2)
172	Steel Repair S15 - Crack Arrest Repair (1 of 2)
173	Steel Repair S15 - Crack Arrest Repair (2 of 2)
174	Steel Repair S16 - Fatigue Retrofit Ramp E Cover Plates
175	Steel Repair S17 - Replace Bolt
176	Steel Repair S18 - Remove Tack Weld (1 of 2)
177	Steel Repair S18 - Remove Tack Weld (2 of 2)
178	Steel Repair S20 - Cross Girder Repair Ramp F
179	Steel Repair S21 - Miscellaneous Steel Repair
180	Steel Repair S23 - Remove Lateral Bracing Member (1 of 2)
181	Steel Repair S23 - Remove Lateral Bracing Member (2 of 2)
182	Painting Repair P1 - Clean and Paint Bridge Structural Steel
183	Painting Repair P2 - Pack Rust Removal
184	Miscellaneous Repair M1 - Sign Supports on Truss (1 of 2)
185	Miscellaneous Repair M1 - Sign Supports on Truss (2 of 2)
186	Miscellaneous Repair M2 - Overhead Sign Supports on Approaches (1 of 2)
187	Miscellaneous Repair M2 - Overhead Sign Supports on Approaches (2 of 2)
188	Expansion Bearing Details (1 of 2)
189	Expansion Bearing Details (2 of 2)
190	Table of Bearing Design Loads (1 of 2)
191	Table of Bearing Design Loads (2 of 2)
192	Bearing Design Table (1 of 2)
193	Bearing Design Table (2 of 2)
194	Bearing Pedestal Details
195	Pedestal Design Table (1 of 2)
196	Pedestal Design Table (2 of 2)
197	Pedestal Reinforcement Bar Schedule (1 of 2)
198	Pedestal Reinforcement Bar Schedule (2 of 2)
199	Jacking Details (1 of 4)
200	Jacking Details (2 of 4)
201	Jacking Details (3 of 4)
202	Jacking Details (4 of 4)
203	Deck Geometry Plan - CA Gore
204	Deck Geometry Plan - DA Gore
205	Deck Geometry Plan - DE Gore
206	Deck Geometry Plan - DF Gore
207	Deck Placement Plan (EB) - Span 1 and Span 2
208	Deck Section (EB) - Span 1 and Span 2
209	Deck Placement Plan (EB) - Span 3 and Span 4
210	Deck Section (EB) - Span 3 and Span 4
211	Deck Placement Plan (EB) - Spans 5, 6 and DA
212	Deck Section (EB) - Spans 5, 6 and DA (1 of 4)
213	Deck Section (EB) - Spans 5, 6 and DA (2 of 4)
214	Deck Section (EB) - Spans 5, 6 and DA (3 of 4)
215	Deck Section (EB) - Spans 5, 6 and DA (4 of 4)
216	Deck Placement Plan (Ramp D) - Span D1
217	Deck Section (Ramp D) - Span D1
218	Deck Placement Plan (Ramp D) - Span D2 and Span D3
219	Deck Section (Ramp D) - Span D2 and Span D3
220	Deck Placement Plan (EB) - Span 7 (1 of 2)

PROJECT NUMBERS		DISTRICT	COUNTY	SHEET NO.	TOTAL
STATE	FEDERAL				
S320-64-57.44 00	NHPP-0064 (497)D	1	KANAWHA		

CURRENT SHEET LIST - MAY CHANGE

NO.	REVISION	DATE	BY

WEST VIRGINIA DEPARTMENT OF TRANSPORTATION
DIVISION OF HIGHWAYS
ENGINEERING DIVISION

I-64 OVER KANAWHA RIVER
EUGENE A. CARTER MEMORIAL BRIDGE +3

INDEX OF SHEETS
(2 OF 3)

DESIGNED	DATE
DRAWN	
CHECKED	
REVIEWED	

HDR ENGINEERING INC.
CONSULTING ENGINEERS
CHARLESTON, WV
681-341-6100

SHEET OF
BRIDGE NO. 2563.6

pw://pwhdruseas02.intranet.hdr:HDR_US_East_02/Documents/WV_DOT/WVDOT-Eugene_Carter_Bridge_3/6.0_CAD_BIM/6.2_WIP/HDR/6.2.2_Sheet_Files/23_Structure/Reference/str_ref_bdr_Eugene Carter Memorial.dgn
$DD-MMM-YYYY HH:MM$
SNOLEN

SHEET NUMBER	SHEET TITLE
221	Deck Placement Plan (EB) - Span 7 (2 of 2)
222	Deck Section (EB) - Span 7
223	Deck Placement Plan (EB) - Span 8 and Span 9
224	Deck Section (EB) - Span 8 and Span 9 (1 of 2)
225	Deck Section (EB) - Span 8 and Span 9 (2 of 2)
226	Deck Placement Plan (EB) - Spans 10, 11 and EF
227	Deck Section (EB) - Spans 10, 11 and EF (1 of 3)
228	Deck Section (EB) - Spans 10, 11 and EF (2 of 3)
229	Deck Section (EB) - Spans 10, 11 and EF (3 of 3)
230	Reinforcement Schedule - Deck Mainline EB (1 of 3)
231	Reinforcement Schedule - Deck Mainline EB (2 of 3)
232	Reinforcement Schedule - Deck Mainline EB (3 of 3)
233	Reinforcement Schedule - Deck Ramp D
234	Deck Placement Plan (WB) - Span 1 and Span 2
235	Deck Section (WB) - Span 1 and Span 2
236	Deck Placement Plan (WB) - Span 3 and Span 4
237	Deck Section (WB) - Span 3 and Span 4
238	Deck Placement Plan (WB) - Spans 5, 6 and CA
239	Deck Section (WB) - Spans 5, 6 and CA (1 of 3)
240	Deck Section (WB) - Spans 5, 6 and CA (2 of 3)
241	Deck Section (WB) - Spans 5, 6 and CA (3 of 3)
242	Deck Placement Plan (WB) - Span 7 (1 of 2)
243	Deck Placement Plan (WB) - Span 7 (2 of 2)
244	Deck Section (WB) - Span 7
245	Deck Placement Plan (WB) - Span 8 and Span 9
246	Deck Section (WB) - Span 8 and Span 9 (1 of 2)
247	Deck Section (WB) - Span 8 and Span 9 (2 of 2)
248	Deck Placement Plan (WB) - Spans 10, 11, DE and EE
249	Deck Section (WB) - Spans 10, 11, DE and EE (1 of 3)
250	Deck Section (WB) - Spans 10, 11, DE and EE (2 of 3)
251	Deck Section (WB) - Spans 10, 11, DE and EE (3 of 3)
252	Reinforcement Schedule - Deck Mainline WB (1 of 3)
253	Reinforcement Schedule - Deck Mainline WB (2 of 3)
254	Reinforcement Schedule - Deck Mainline WB (3 of 3)
255	Deck Placement Plan - Ramp E
256	Deck Section - Ramp E
257	Reinforcement Schedule - Ramp E
258	Deck Placement Plan - Ramp F
259	Deck Section - Ramp F
260	Reinforcement Schedule - Ramp F
261	Typical Deck Details (1 of 5)
262	Typical Deck Details (2 of 5)
263	Typical Deck Details (3 of 5)
264	Typical Deck Details (4 of 5)
265	Typical Deck Details (5 of 5)
266	Deck Elevations - Mainline (1 of 12) - EB 10th Points Over Beams
267	Deck Elevations - Mainline (2 of 12) - EB 10th Points Over Beams
268	Deck Elevations - Mainline (3 of 12) - EB 10th Points Over Beams
269	Deck Elevations - Mainline (4 of 12) - EB 10th Points Over Beams
270	Deck Elevations - Mainline (5 of 12) - EB 10th Points Over Beams
271	Deck Elevations - Mainline (6 of 12) - EB 10' Increments at Breaks
272	Deck Elevations - Mainline (7 of 12) - WB 10th Points Over Beams
273	Deck Elevations - Mainline (8 of 12) - WB 10th Points Over Beams
274	Deck Elevations - Mainline (9 of 12) - WB 10th Points Over Beams
275	Deck Elevations - Mainline (10 of 12) - WB 10th Points Over Beams

SHEET NUMBER	SHEET TITLE
276	Deck Elevations - Mainline (11 of 12) - WB 10th Points Over Beams
277	Deck Elevations - Mainline (12 of 12) - WB 10' Increments at Breaks
278	Deck Elevations - Ramp D - 10th Points and 10' Increments
279	Deck Elevations - Ramp E - 10th Points and 10' Increments
280	Deck Elevations - Ramp F - 10th Points and 10' Increments
281	Deck Deflections - Procedure
282	Abut AW Strip Seal Details
283	Abut AE Strip Seal Details
284	Pier A3 Strip Seal Details
285	Pier A4 Strip Seal Details
286	Pier A7 Strip Seal Details
287	Pier A8 Strip Seal Details
288	Pier C (EB) Strip Seal Details
289	Pier C (WB) Strip Seal Details
290	Pier E (EB) Strip Seal Details
291	Pier E (WB) Strip Seal Details
292	Pier EB Strip Seal Details
293	Pier FB Strip Seal Details
294	Pier R1 (EB) Strip Seal Details
295	Pier R1 (WB) Strip Seal Details
296	Pier D1 Strip Seal Details
297	Pier D3 Strip Seal Details
298	Strip Seals General Details
299	Pier B (EB) Modular Joint (1 of 2)
300	Pier B (EB) Modular Joint (2 of 2)
301	Pier B (WB) Modular Joint (1 of 2)
302	Pier B (WB) Modular Joint (2 of 2)
303	Pier B Modular Joint Details
304	Deck Drainage Details - Mainline (1 of 8)
305	Deck Drainage Details - Mainline (2 of 8)
306	Deck Drainage Details - Mainline (3 of 8)
307	Deck Drainage Details - Mainline (4 of 8)
308	Deck Drainage Details - Mainline (5 of 8)
309	Deck Drainage Details - Mainline (6 of 8)
310	Deck Drainage Details - Mainline (7 of 8)
311	Deck Drainage Details - Mainline (8 of 8)
312	Deck Drainage Details - Ramp D (1 of 2)
313	Deck Drainage Details - Ramp D (2 of 2)
314	Deck Drainage Details - Ramp E (1 of 2)
315	Deck Drainage Details - Ramp E (2 of 2)
316	Deck Drainage Details - Ramp F (1 of 2)
317	Deck Drainage Details - Ramp F (2 of 2)
318	Deck Drainage Details - Pipe Support Details
319	Deck Drainage Details - Scupper Details
320	Approach Slab Plan - Abutment AW
321	Approach Slab Details - Abutment AW
322	Approach Slab Plan - Abutment AE
323	Approach Slab Details - Abutment AE
324	Approach Slab Plan - Abutment C
325	Approach Slab Details - Abutment C
326	Approach Slab Plan - Abutment D
327	Approach Slab Details - Abutment D
328	Approach Slab Plan - Abutment E
329	Approach Slab Details - Abutment E
330	Approach Slab Plan - Abutment F

PROJECT NUMBERS		DISTRICT	COUNTY	SHEET NO.	TOTAL
STATE	FEDERAL				
S320-64-57.44 00	NHPP-0064 (497)D	1	KANAWHA		

CURRENT SHEET LIST - MAY CHANGE

SHEET NUMBER	SHEET TITLE
331	Approach Slab Details - Abutment F
332	Approach Slab General Details
333	Barrier on Approach Slab Details (1 of 5)
334	Barrier on Approach Slab Details (2 of 5)
335	Barrier on Approach Slab Details (3 of 5)
336	Barrier on Approach Slab Details (4 of 5)
337	Barrier on Approach Slab Details (5 of 5)
338	Sign Support Details (1 of 5)
339	Sign Support Details (2 of 5)
340	Sign Support Details (3 of 5)
341	Sign Support Details (4 of 5)
342	Sign Support Details (5 of 5)
343	Load Rating Sheets

NO.	REVISION	DATE	BY

WEST VIRGINIA DEPARTMENT OF TRANSPORTATION
DIVISION OF HIGHWAYS
ENGINEERING DIVISION

I-64 OVER KANAWHA RIVER
EUGENE A. CARTER MEMORIAL BRIDGE +3

INDEX OF SHEETS
(3 OF 3)

DESIGNED	DATE
DRAWN	
CHECKED	
REVIEWED	

HDR ENGINEERING INC.
CONSULTING ENGINEERS
CHARLESTON, WV
681-341-6100

SHEET OF

BRIDGE NO. 2563.6

pw://pwhdruseas02.intranet.hdr:HDR_US_East_02/Documents/WV_DOT/WVDOT-Eugene_Carter_Bridge_3/6.0_CAD_BIM/6.2_WIP/HDR/6.2.2_Sheet_Files/23_Structure/Reference/str_ref_bdr_Eugene Carter Memorial.dgn
$DD-MMM-YYYY HH:MM$
SNOLEN

PROJECT NUMBERS		DISTRICT	COUNTY	SHEET NO.	TOTAL
STATE	FEDERAL				
S320-64-57.44 00	NHPP-0064 (497)D	1	KANAWHA		

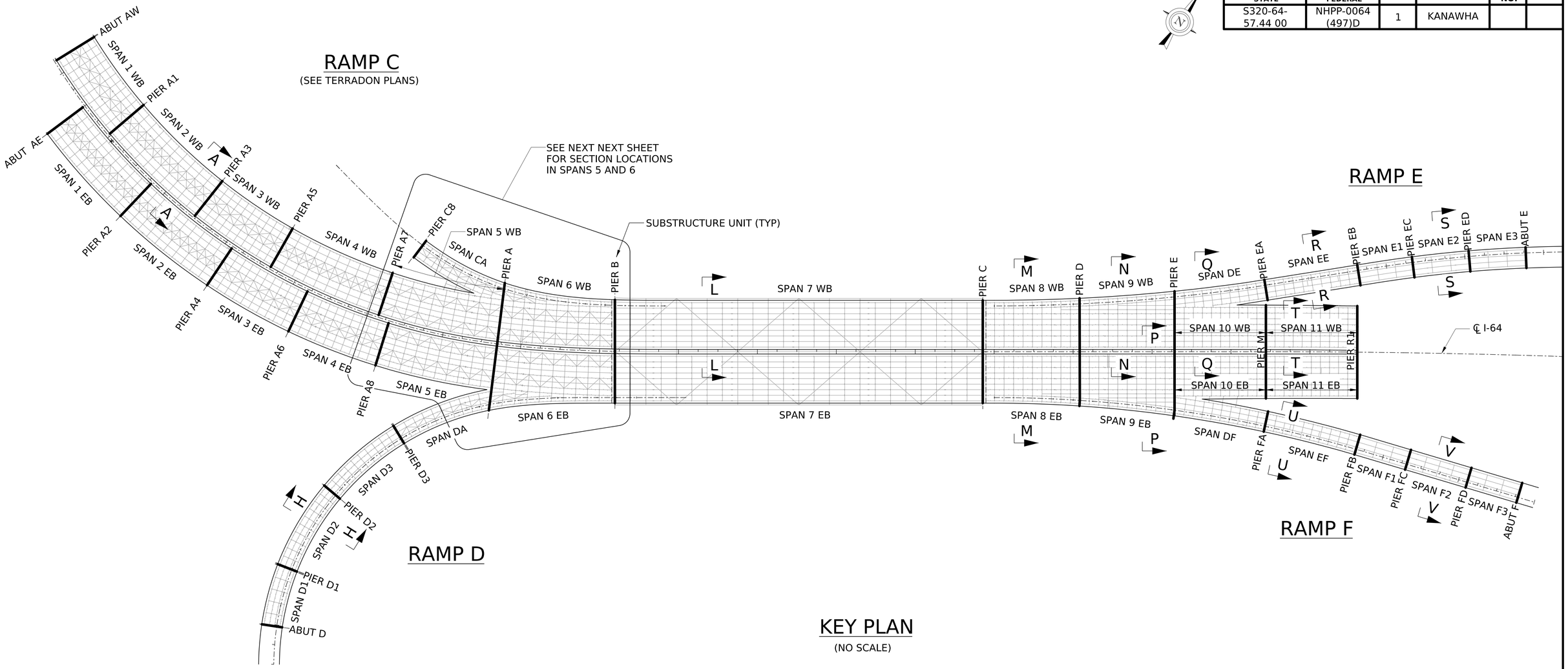

KEY PLAN
(NO SCALE)

NO.	REVISION	DATE	BY

WEST VIRGINIA DEPARTMENT OF TRANSPORTATION
DIVISION OF HIGHWAYS
ENGINEERING DIVISION

I-64 OVER KANAWHA RIVER
EUGENE A. CARTER MEMORIAL BRIDGE +3
KEY PLAN (1 OF 2)

DESIGNED	DATE
JWB	08/25
DRAWN	
SCN	08/25
CHECKED	
REVIEWED	

HDR ENGINEERING INC.
CONSULTING ENGINEERS
CHARLESTON, WV
681-341-6100

SHEET OF
BRIDGE NO. 2563.6

SNOLEN $DD-MMM-YYYY HH:MM$ pw://pwhdruseas02.intranet.hdr:HDR_US_East_02/Documents/WV_DOT/WVDOT-Eugene_Carter_Bridge_3/6.0_CAD_BIM/6.2_WIP/HDR/6.2.2_Sheet_Files/23_Structure/1.014 Typ Section Location Plan 01

PROJECT NUMBERS		DISTRICT	COUNTY	SHEET NO.	TOTAL
STATE	FEDERAL				
S320-64-57.44 00	NHPP-0064 (497)D	1	KANAWHA		

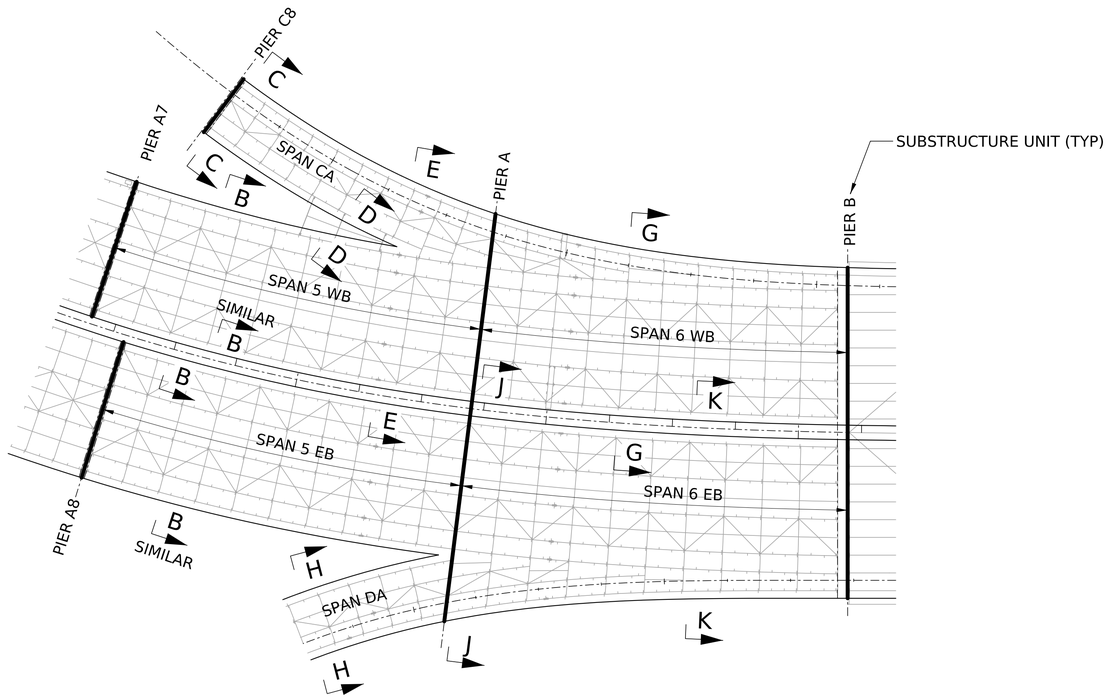

RAMP D

KEY PLAN

(NO SCALE)

NO.	REVISION	DATE	BY

WEST VIRGINIA DEPARTMENT OF TRANSPORTATION
DIVISION OF HIGHWAYS
ENGINEERING DIVISION

I-64 OVER KANAWHA RIVER
EUGENE A. CARTER MEMORIAL BRIDGE +3

KEY PLAN (2 OF 2)

DESIGNED	DATE
JWB	08/25
DRAWN	
SCN	08/25
CHECKED	
REVIEWED	

HDR ENGINEERING INC.
CONSULTING ENGINEERS

CHARLESTON, WV
681-341-6100

SHEET OF

BRIDGE NO. 2563.6

SNOLEN $DD-MMM-YYYY HH:MM$ pw://pwhdruseas02.intranet.hdr:HDR_US_East_02/Documents/WV_DOT/WVDOT-Eugene_Carter_Bridge_3/6.0_CAD_BIM/6.2_WIP/HDR/6.2.2_Sheet_Files/23_Structure/1.015 Typ Section Location Plan 02

PROJECT NUMBERS		DISTRICT	COUNTY	SHEET NO.	TOTAL
STATE	FEDERAL				
S320-64-57.44 00	NHPP-0064 (497)D	1	KANAWHA		

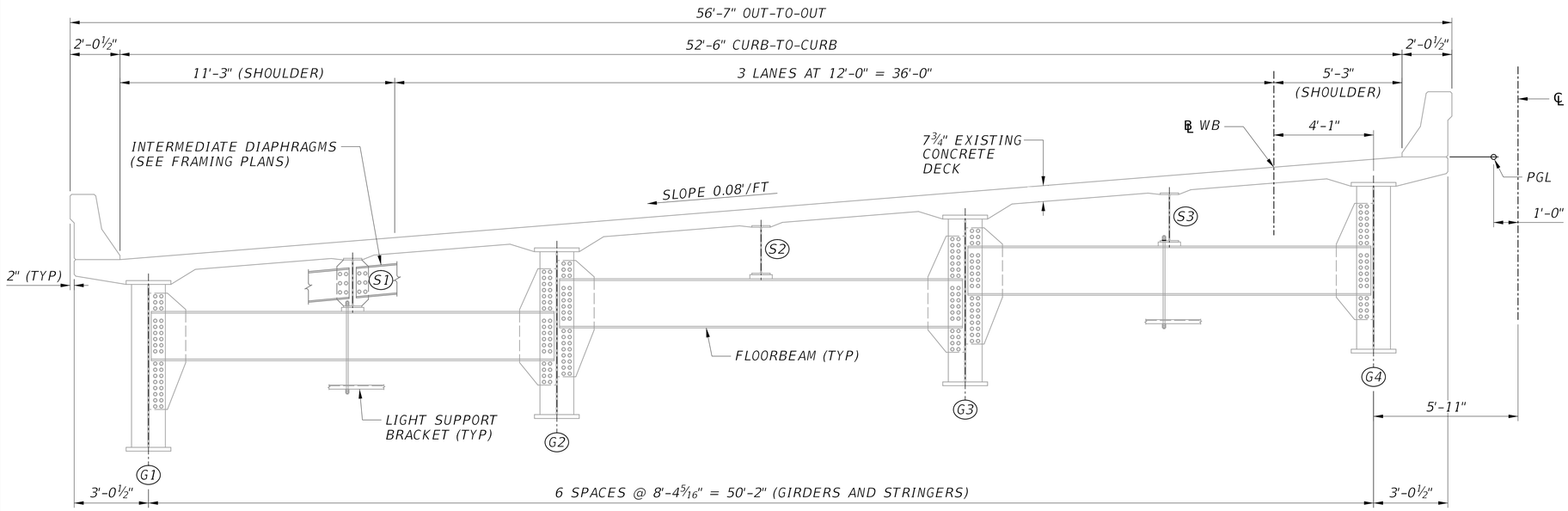

SECTION A
EXISTING TYPICAL SECTION

(LOOKING AHEAD STATION)
(EASTBOUND SIMILAR)

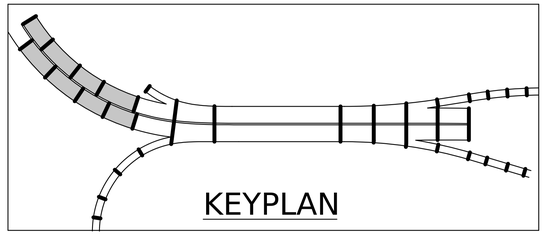

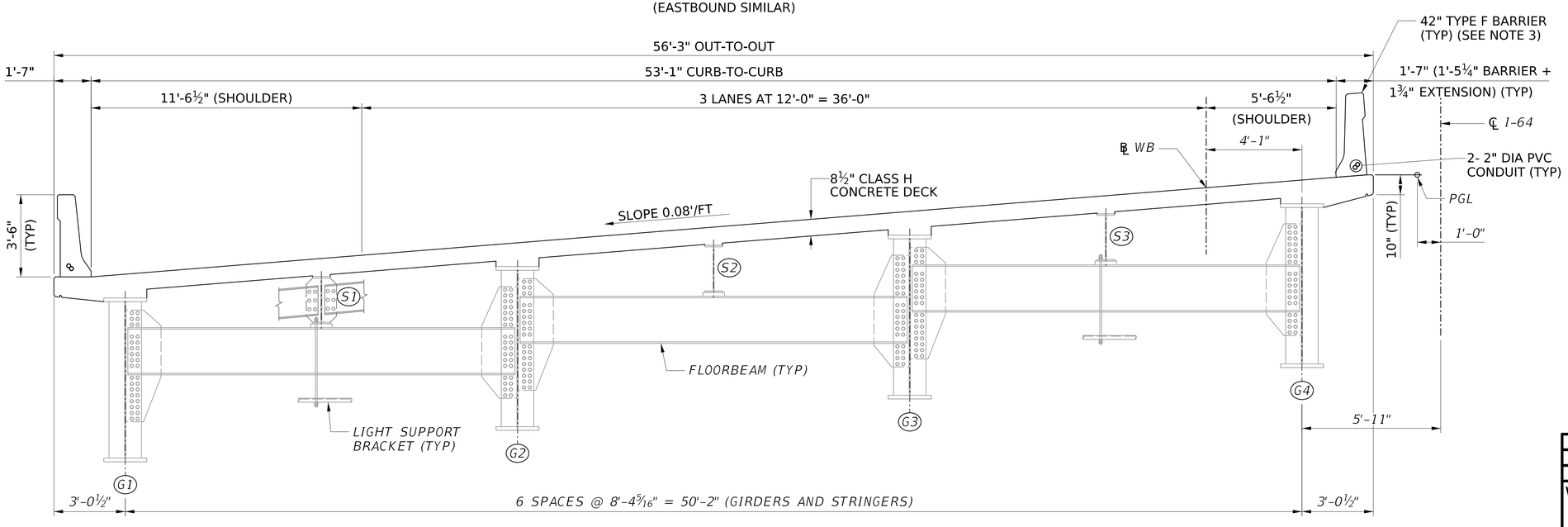

SECTION A
PROPOSED TYPICAL SECTION

(LOOKING AHEAD STATION)
(EASTBOUND SIMILAR)

NOTES:

1. FOR GENERAL NOTES, SEE SHEETS G11 AND G12.
2. FOR DECK CROSS SLOPE AND SUPERELEVATION INFORMATION, SEE ROADWAY SHEETS.
3. CONSTRUCT HIGH SIDE BARRIER PERPENDICULAR TO THE DECK AND THE LOW SIDE BARRIER PLUMB.

SCALE : 1 0 1 2 3 ft.
⅜" = 1'-0"

NO.	REVISION	DATE	BY

WEST VIRGINIA DEPARTMENT OF TRANSPORTATION
DIVISION OF HIGHWAYS
ENGINEERING DIVISION

I-64 OVER KANAWHA RIVER
EUGENE A. CARTER MEMORIAL BRIDGE +3

TYPICAL SECTIONS
SPANS 1 - 4

DESIGNED	DATE
JWB	08/25
DRAWN	
SCN	08/25
CHECKED	
REVIEWED	

HDR ENGINEERING INC.
CONSULTING ENGINEERS
CHARLESTON, WV
681-341-6100

SHEET OF
BRIDGE NO. 2563.6

pw://pwhdruseas02.intranet.hdr:HDR_US_East_02/Documents/WV_DOT/WVDOT-Eugene_Carter_Bridge_3/6.0_CAD_BIM/6.2_CAD_BIM/6.2_WIP/HDR/6.2.2_Sheet_Files/23_Structure/1.016 Spans A1 - A4 Typical Section AA
$DD-MMM-YYYY HH:MM$
SNOLEN

PROJECT NUMBERS		DISTRICT	COUNTY	SHEET NO.	TOTAL
STATE	FEDERAL				
S320-64-57.44 00	NHPP-0064 (497)D	1	KANAWHA		

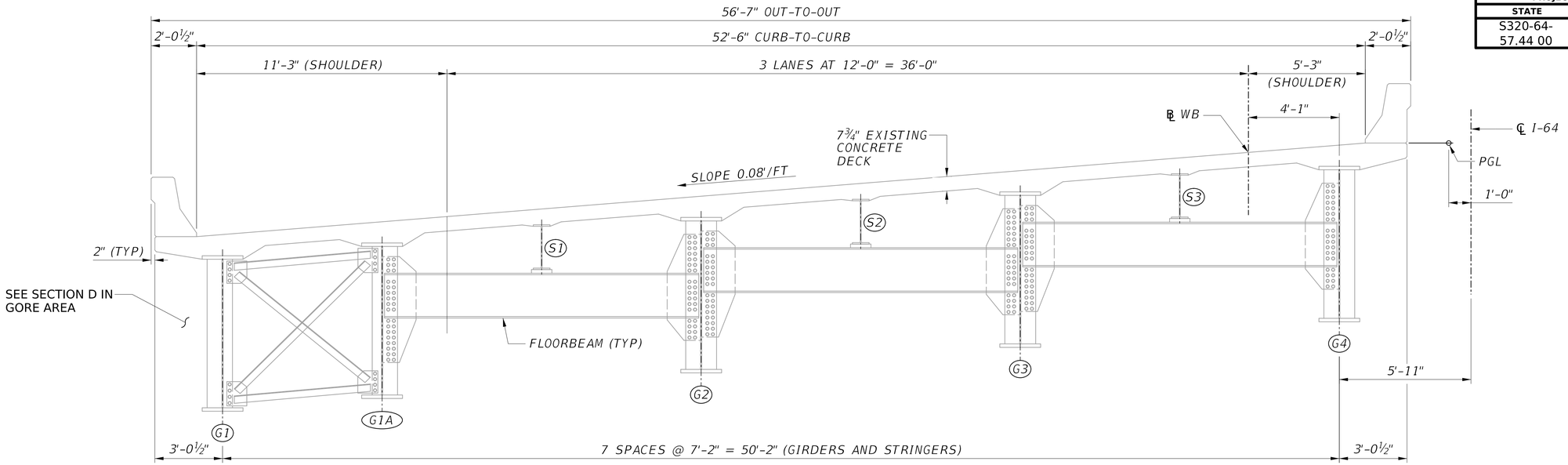

SECTION B (PIER A7 TO GORE)
EXISTING TYPICAL SECTION

(LOOKING AHEAD STATION)
(EASTBOUND SIMILAR, PIER A8 TO GORE)

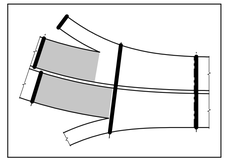

KEY PLAN

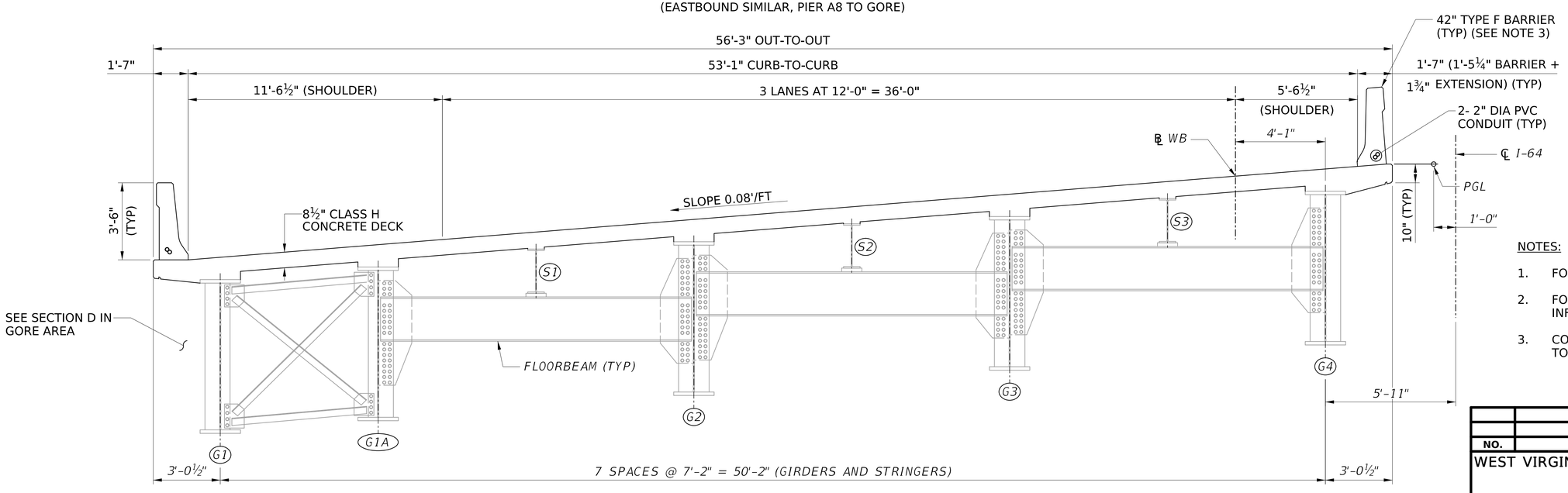

SECTION B (PIER A7 TO GORE)
PROPOSED TYPICAL SECTION

(LOOKING AHEAD STATION)
(EASTBOUND SIMILAR, PIER A8 TO GORE)

NOTES:

1. FOR GENERAL NOTES, SEE SHEETS G11 AND G12.
2. FOR DECK CROSS SLOPE AND SUPERELEVATION INFORMATION, SEE ROADWAY SHEETS.
3. CONSTRUCT HIGH SIDE BARRIER PERPENDICULAR TO THE DECK AND THE LOW SIDE BARRIER PLUMB.

SCALE : 1 0 1 2 3 ft.
⅜" = 1'-0"

NO.	REVISION	DATE	BY

WEST VIRGINIA DEPARTMENT OF TRANSPORTATION
DIVISION OF HIGHWAYS
ENGINEERING DIVISION

I-64 OVER KANAWHA RIVER
EUGENE A. CARTER MEMORIAL BRIDGE +3
TYPICAL SECTIONS
SPAN 5

DESIGNED	DATE
JWB	08/25
DRAWN	
SCN	08/25
CHECKED	
REVIEWED	

HDR ENGINEERING INC.
CONSULTING ENGINEERS
CHARLESTON, WV
681-341-6100

SHEET OF
BRIDGE NO. 2563.6

SNOLEN $DD-MMM-YYYY HH:MM$ pw://pwhdruseas02.intranet.hdr:HDR_US_East_02/Documents/WV_DOT/WVDOT-Eugene_Carter_Bridge_3/6.0_CAD_BIM/6.2_CAD_BIM/6.2_WIP/HDR/6.2.2_Sheet_Files/23_Structure/1.017 Spans A5 -WB Typical Section BB

PROJECT NUMBERS		DISTRICT	COUNTY	SHEET NO.	TOTAL
STATE	FEDERAL				
S320-64-57.44 00	NHPP-0064 (497)D	1	KANAWHA		

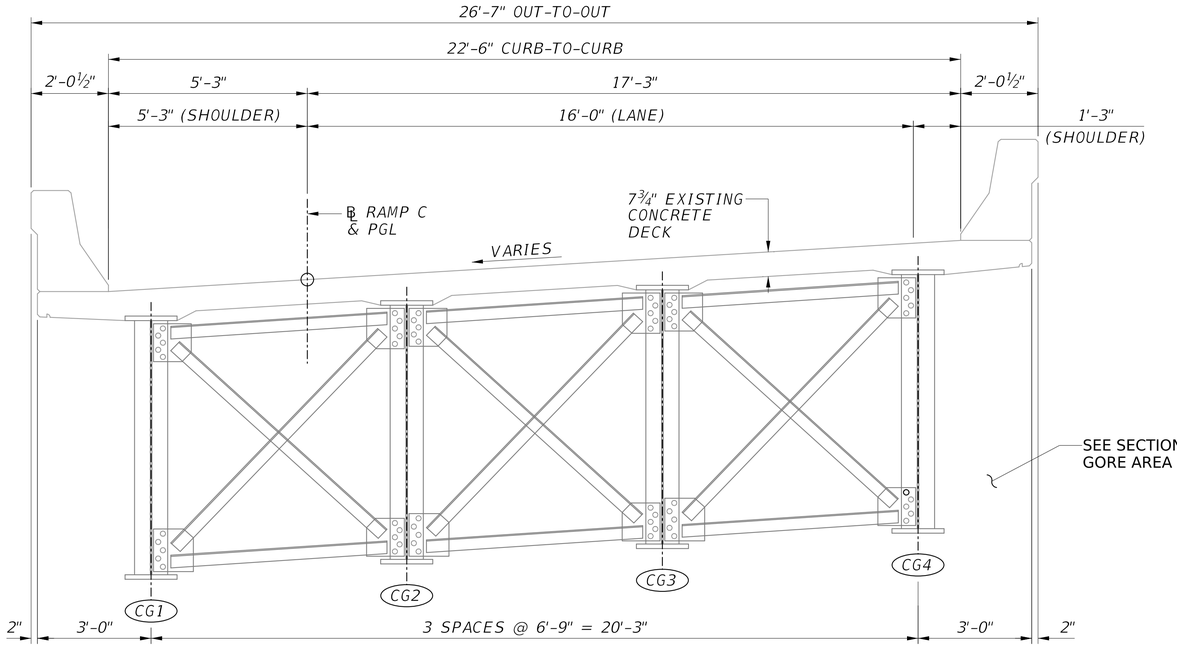

SECTION C, (PIER C8 TO GORE) EXISTING TYPICAL SECTION

(LOOKING BACK STATION)

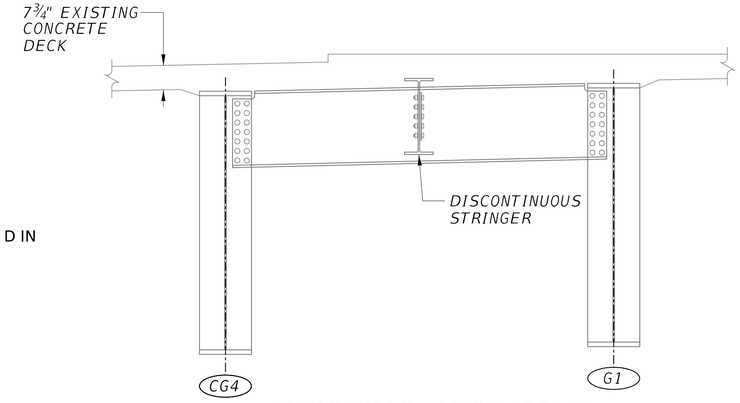

EXISTING SECTION D

(LOOKING BACK STATION)

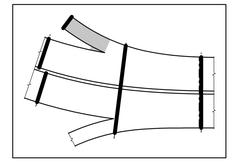

KEY PLAN

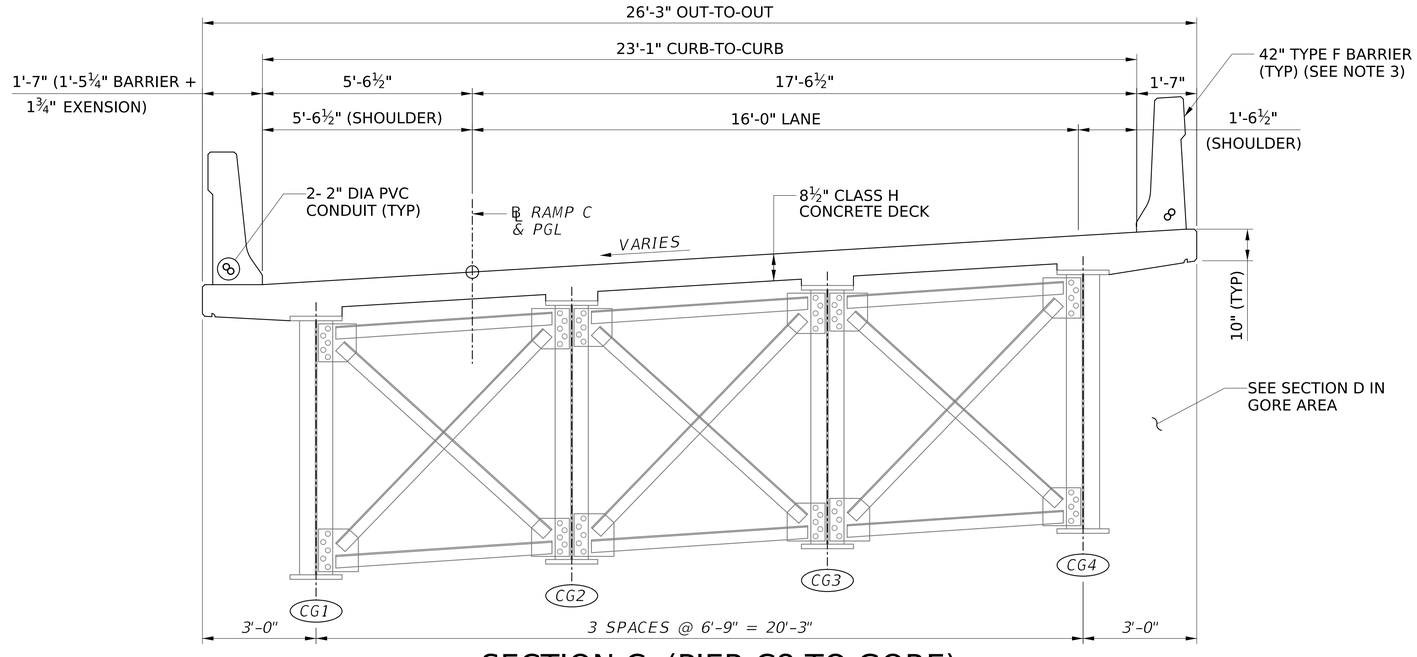

SECTION C, (PIER C8 TO GORE) PROPOSED TYPICAL SECTION

(LOOKING BACK STATION)

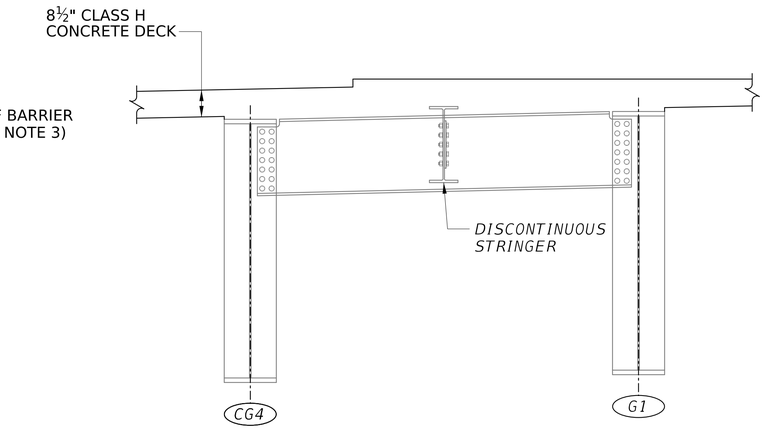

PROPOSED SECTION D

(LOOKING BACK STATION)

NOTES:

1. FOR GENERAL NOTES, SEE SHEETS G11 AND G12.
2. FOR DECK CROSS SLOPE AND SUPERELEVATION INFORMATION, SEE ROADWAY SHEETS.
3. CONSTRUCT HIGH SIDE BARRIER PERPENDICULAR TO THE DECK AND THE LOW SIDE BARRIER PLUMB.

SCALE : 1 0 1 2 ft.
½" = 1'-0"

NO.	REVISION	DATE	BY

WEST VIRGINIA DEPARTMENT OF TRANSPORTATION
DIVISION OF HIGHWAYS
ENGINEERING DIVISION

I-64 OVER KANAWHA RIVER
EUGENE A. CARTER MEMORIAL BRIDGE +3
TYPICAL SECTIONS
SPAN CA

DESIGNED	JWB	08/25
DRAWN	SCN	08/25
CHECKED		
REVIEWED		

HDR ENGINEERING INC.
CONSULTING ENGINEERS
CHARLESTON, WV
681-341-6100

SHEET OF
BRIDGE NO. 2563.6

SNOLEN $DD-MMM-YYYY HH:MM$ pw://pwhdruseas02.intranet.hdr:HDR_US_East_02/Documents/WV_DOT/WVDOT-Eugene_Carter_Bridge_3/6.0_CAD_BIM/6.2_CAD_BIM/6.2_WIP/HDR/6.2.2_Sheet_Files/23_Structure/1.018 Ramp C Typical Section CC

PROJECT NUMBERS		DISTRICT	COUNTY	SHEET NO.	TOTAL
STATE	FEDERAL				
S320-64-57.44 00	NHPP-0064 (497)D	1	KANAWHA		

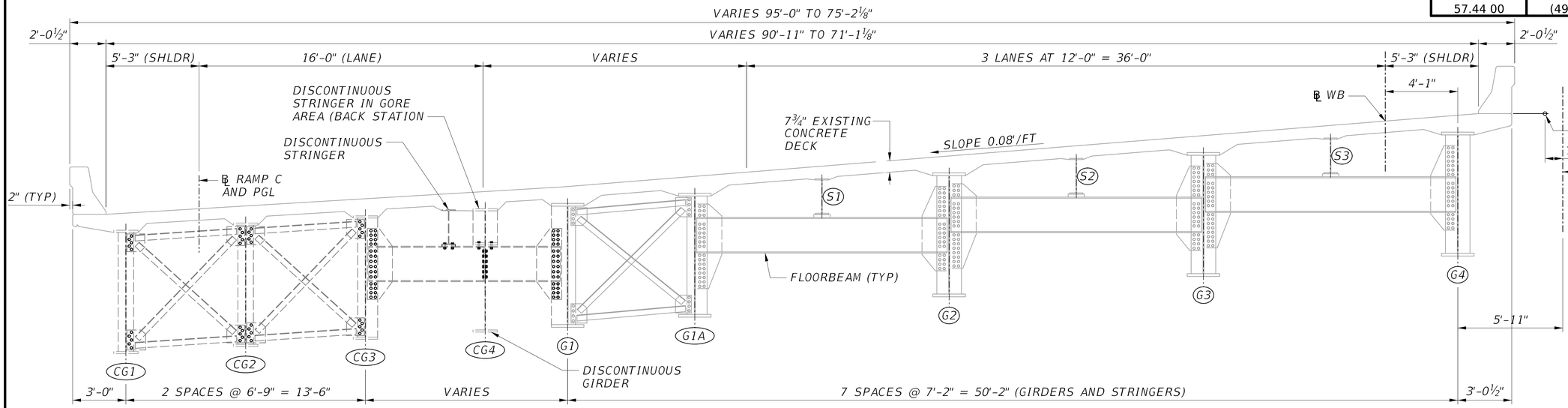

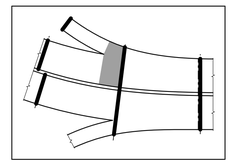

KEY PLAN

SECTION E (BEYOND GORE TO PIER A)
EXISTING TYPICAL SECTION

(LOOKING AHEAD STATION)

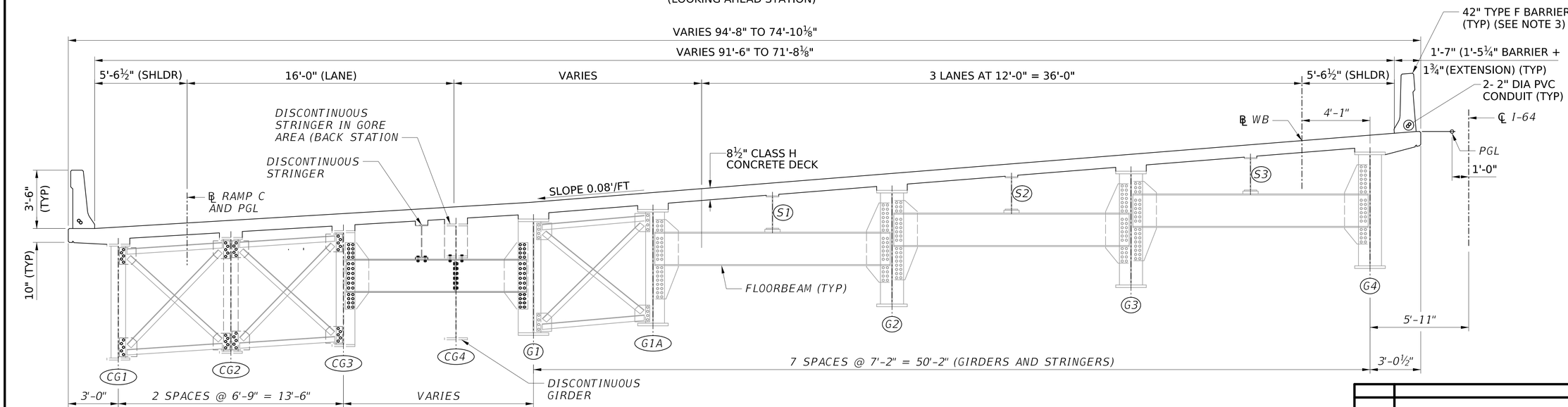

SECTION E (BEYOND GORE TO PIER A)
PROPOSED TYPICAL SECTION

(LOOKING AHEAD STATION)

NOTES:

1. FOR GENERAL NOTES, SEE SHEETS G11 AND G12.
2. FOR DECK CROSS SLOPE AND SUPERELEVATION INFORMATION, SEE ROADWAY SHEETS.
3. CONSTRUCT HIGH SIDE BARRIER PERPENDICULAR TO THE DECK AND THE LOW SIDE BARRIER PLUMB.

NOT TO SCALE

NO.	REVISION	DATE	BY

WEST VIRGINIA DEPARTMENT OF TRANSPORTATION
DIVISION OF HIGHWAYS
ENGINEERING DIVISION

I-64 OVER KANAWHA RIVER
EUGENE A. CARTER MEMORIAL BRIDGE +3
TYPICAL SECTIONS
SPANS 5 (WB) & CA

DESIGNED	JWB
DATE	08/25
DRAWN	SCN
DATE	08/25
CHECKED	
REVIEWED	

HDR ENGINEERING INC.
CONSULTING ENGINEERS
CHARLESTON, WV
681-341-6100

SHEET OF

BRIDGE NO. 2563.6

SNOLEN $DD-MMM-YYYY HH:MM$ pw://pwhdruseas02.intranet.hdr:HDR_US_East_02/Documents/WV_DOT/WVDOT-Eugene_Carter_Bridge_3/6.0_CAD_BIM/6.2_WIP/HDR/6.2.2_Sheet_Files/23_Structure/1.019 Span 5 - Ramp CA Typical Section EE

PROJECT NUMBERS		DISTRICT	COUNTY	SHEET NO.	TOTAL
STATE	FEDERAL				
S320-64-57.44 00	NHPP-0064 (497)D	1	KANAWHA		

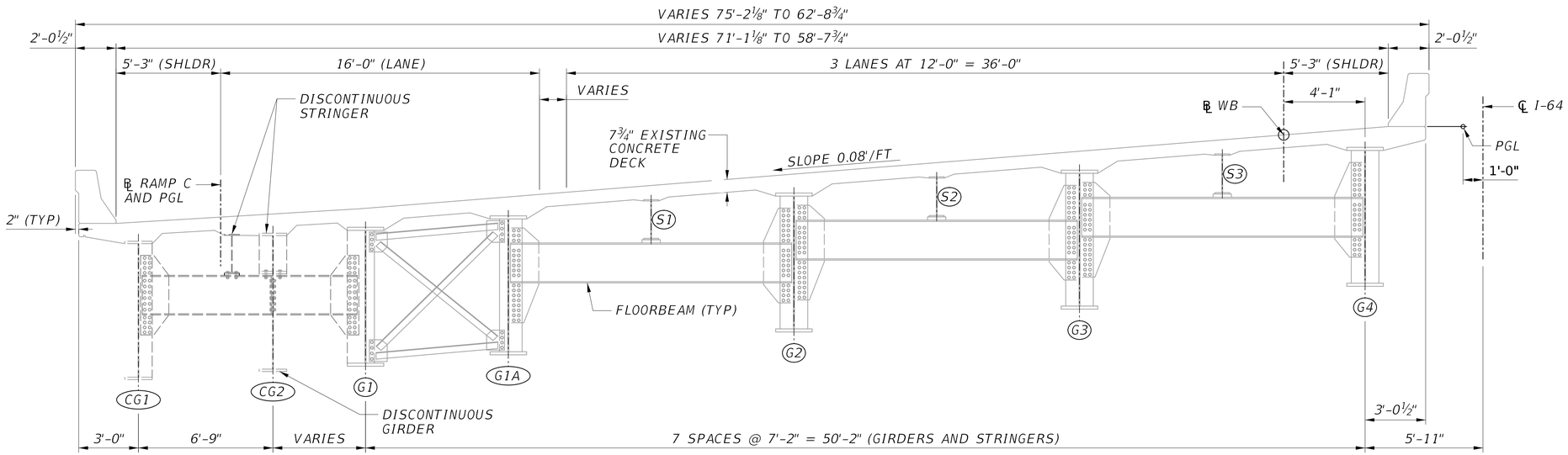

SECTION G
EXISTING TYPICAL SECTION

(LOOKING AHEAD STATION)

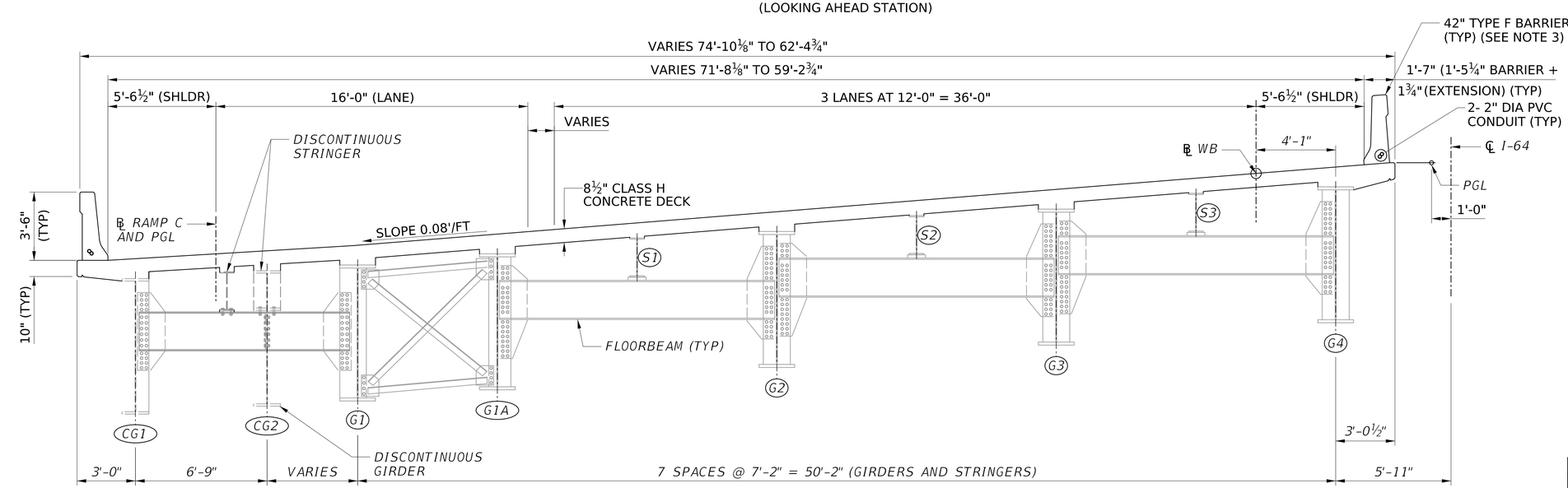

SECTION G
PROPOSED TYPICAL SECTION

(LOOKING AHEAD STATION)

NOT TO SCALE

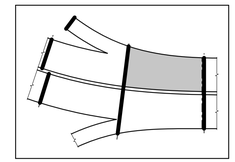

KEY PLAN

NOTES:

1. FOR GENERAL NOTES, SEE SHEETS G11 AND G12.
2. FOR DECK CROSS SLOPE AND SUPERELEVATION INFORMATION, SEE ROADWAY SHEETS.
3. CONSTRUCT HIGH SIDE BARRIER PERPENDICULAR TO THE DECK AND THE LOW SIDE BARRIER PLUMB.

NO.	REVISION	DATE	BY

WEST VIRGINIA DEPARTMENT OF TRANSPORTATION
DIVISION OF HIGHWAYS
ENGINEERING DIVISION

I-64 OVER KANAWHA RIVER
EUGENE A. CARTER MEMORIAL BRIDGE +3

TYPICAL SECTIONS
SPANS 6 (WB) & CA

DESIGNED	DATE
JWB	08/25
DRAWN	
SCN	08/25
CHECKED	
REVIEWED	

HDR ENGINEERING INC.
CONSULTING ENGINEERS
CHARLESTON, WV
681-341-6100

SHEET OF

BRIDGE NO. 2563.6

pw://pwhdruseas02.intranet.hdr:HDR_US_East_02/Documents/WV_DOT/WVDOT-Eugene_Carter_Bridge_3/6.0_CAD_BIM/6.2_WIP/HDR/6.2.2_Sheet_Files/23_Structure/1.020 Span 6 - Ramp CA Typical Section GG
$DD-MMM-YYYY HH:MM$
SNOLEN

PROJECT NUMBERS		DISTRICT	COUNTY	SHEET NO.	TOTAL
STATE	FEDERAL				
S320-64-57.44 00	NHPP-0064 (497)D	1	KANAWHA		

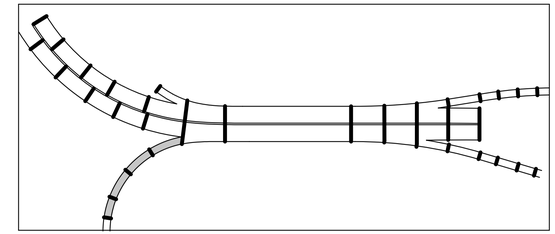

KEY PLAN

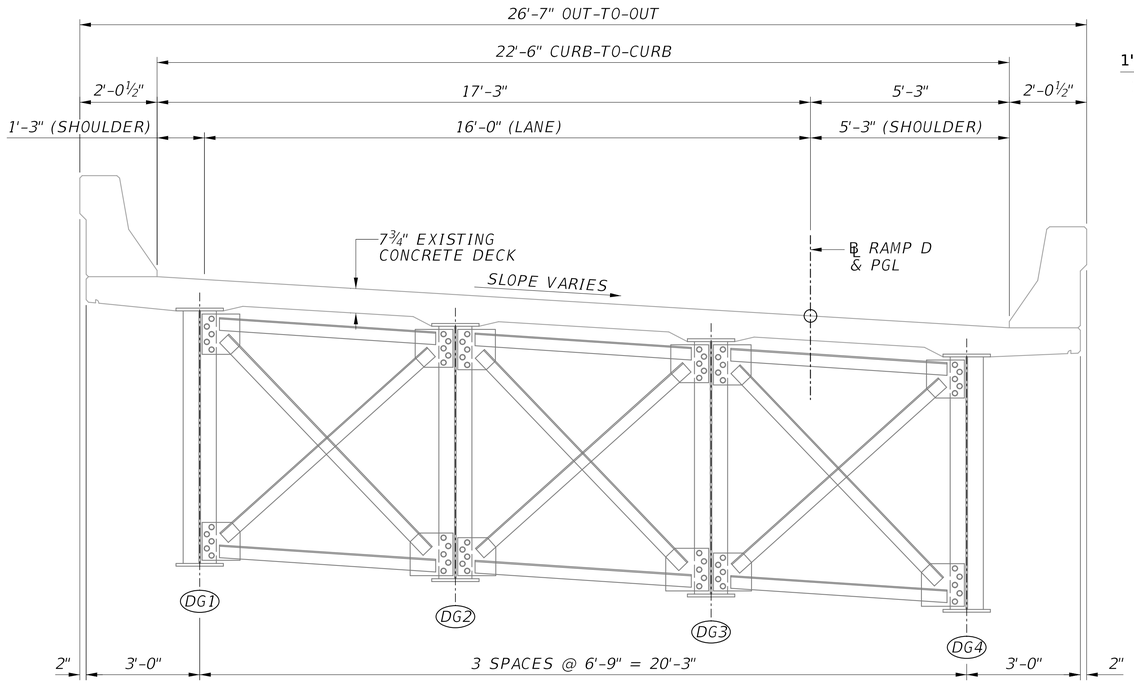

SECTION H
EXISTING TYPICAL SECTION

(RAMP D SHOWN, SPAN DA SIMILAR)
(LOOKING AHEAD STATION)

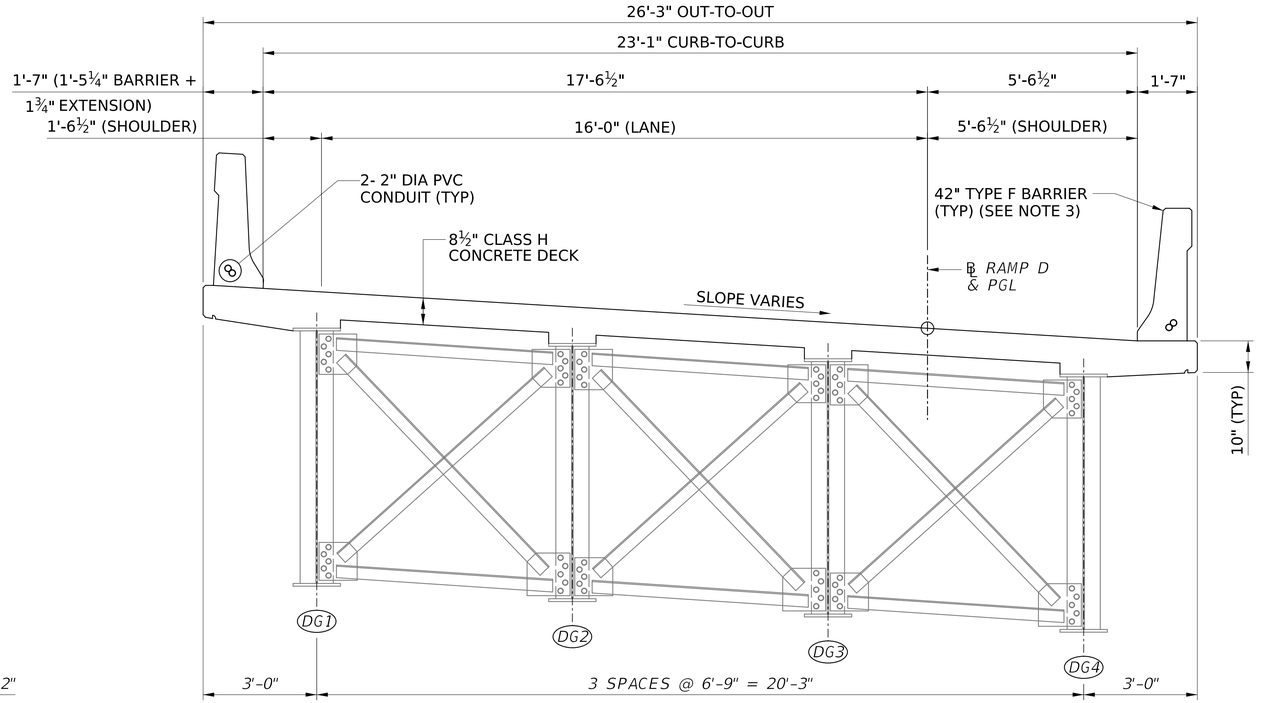

SECTION H
PROPOSED TYPICAL SECTION

(RAMP D SHOWN, SPAN DA SIMILAR)
(LOOKING AHEAD STATION)

NOTES:

1. FOR GENERAL NOTES, SEE SHEETS G11 AND G12.
2. FOR DECK CROSS SLOPE AND SUPERELEVATION INFORMATION, SEE ROADWAY SHEETS.
3. CONSTRUCT HIGH SIDE BARRIER PERPENDICULAR TO THE DECK AND LOW SIDE BARRIER PLUMB.

SCALE : 1 0 1 2 ft.
½" = 1'-0"

NO.	REVISION	DATE	BY

WEST VIRGINIA DEPARTMENT OF TRANSPORTATION
DIVISION OF HIGHWAYS
ENGINEERING DIVISION

I-64 OVER KANAWHA RIVER
EUGENE A. CARTER MEMORIAL BRIDGE +3

TYPICAL SECTIONS
RAMP D

DESIGNED	DATE
JWB	08/25
DRAWN	
SCN	08/25
CHECKED	
REVIEWED	

HDR ENGINEERING INC.
CONSULTING ENGINEERS
CHARLESTON, WV
681-341-6100

SHEET OF
BRIDGE NO. 2563.6

SNOLEN $DD-MMM-YYYY HH:MM$ pw://pwhdruseas02.intranet.hdr:HDR_US_East_02/Documents/WV_DOT/WVDOT-Eugene_Carter_Bridge_3/6.0_CAD_BIM/6.2_WIP/HDR/6.2.2_Sheet_Files/23_Structure/1.021 Ramp D Typical Section HH

PROJECT NUMBERS		DISTRICT	COUNTY	SHEET NO.	TOTAL
STATE	FEDERAL				
S320-64-57.44 00	NHPP-0064 (497)D	1	KANAWHA		

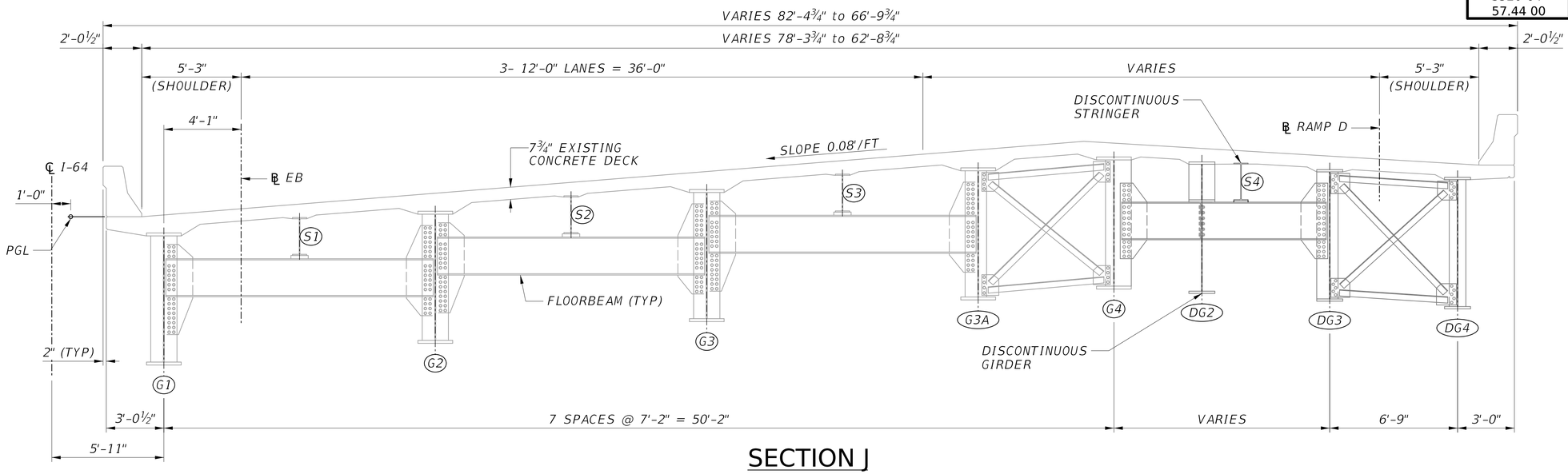

SECTION J
EXISTING TYPICAL SECTION

(LOOKING AHEAD STATION)

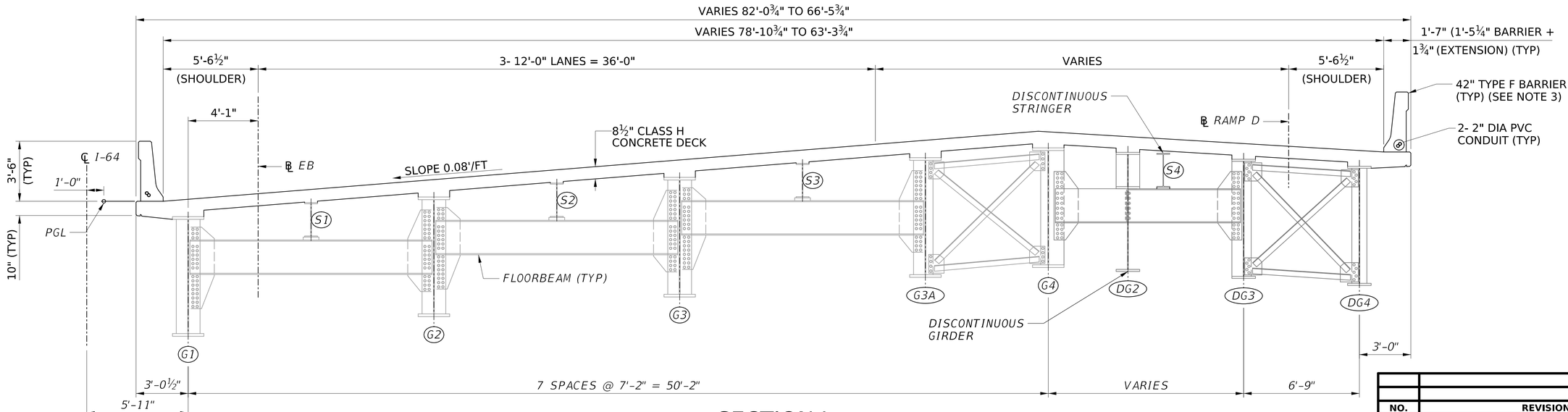

SECTION J
PROPOSED TYPICAL SECTION

(LOOKING AHEAD STATION)

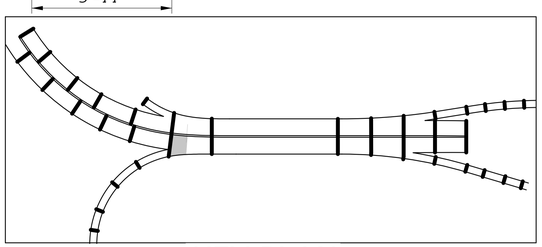

KEY PLAN

NOTES:

1. FOR GENERAL NOTES, SEE SHEETS G11 AND G12.
2. FOR DECK CROSS SLOPE AND SUPERELEVATION INFORMATION, SEE ROADWAY SHEETS.
3. CONSTRUCT ALL BARRIERS PLUMB.

NOT TO SCALE

NO.	REVISION	DATE	BY

WEST VIRGINIA DEPARTMENT OF TRANSPORTATION
DIVISION OF HIGHWAYS
ENGINEERING DIVISION

I-64 OVER KANAWHA RIVER
EUGENE A. CARTER MEMORIAL BRIDGE +3
TYPICAL SECTIONS
SPAN 6 (EB) (1 OF 2)

DESIGNED	DATE
JWB	08/25
DRAWN	
SCN	08/25
CHECKED	
REVIEWED	

HDR ENGINEERING INC.
CONSULTING ENGINEERS
CHARLESTON, WV
681-341-6100

SHEET $TYP06$ OF

BRIDGE NO. 2563.6

pw://pwhdruseas02.Intranet.hdr:HDR_US_East_02/Documents/WV_DOT/WVDOT-Eugene_Carter_Bridge_3/6.0_CAD_BIM/6.2_WIP/HDR/6.2.2_Sheet_Files/23_Structure/1.022 Span 6 EB Typical Section J
$DD-MMM-YYYY HH:MM$
SNOLEN

PROJECT NUMBERS		DISTRICT	COUNTY	SHEET NO.	TOTAL
STATE	FEDERAL				
S320-64-57.44 00	NHPP-0064 (497)D	1	KANAWHA		

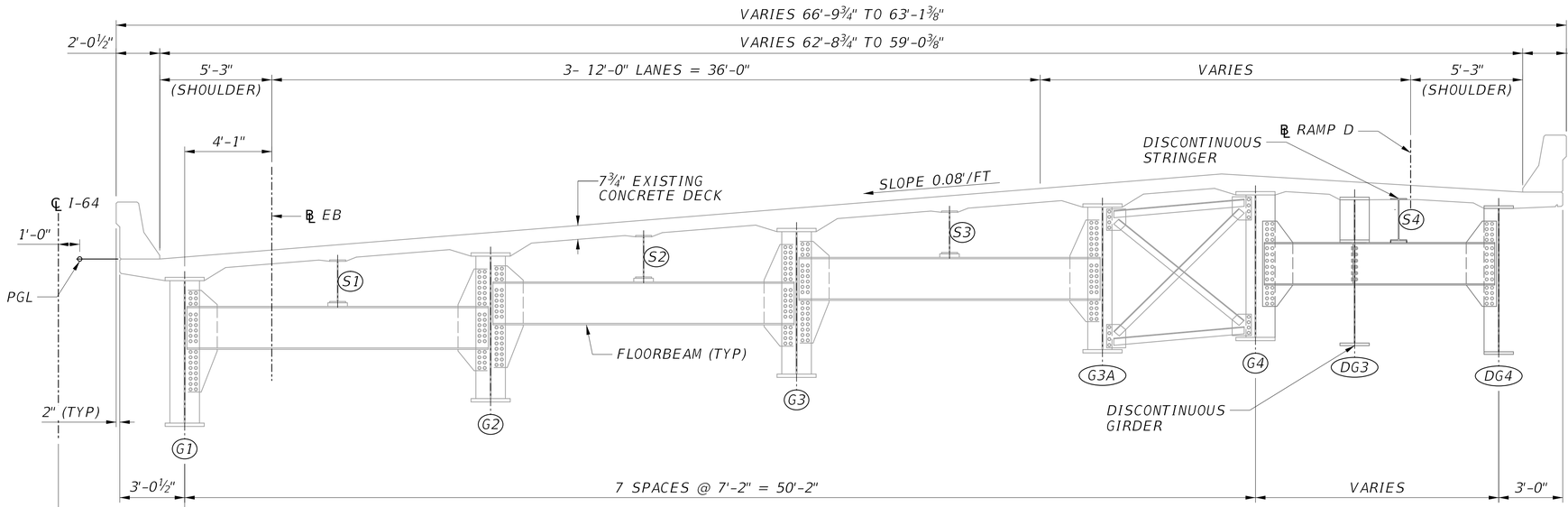

SECTION K
EXISTING TYPICAL SECTION

(LOOKING AHEAD STATION)

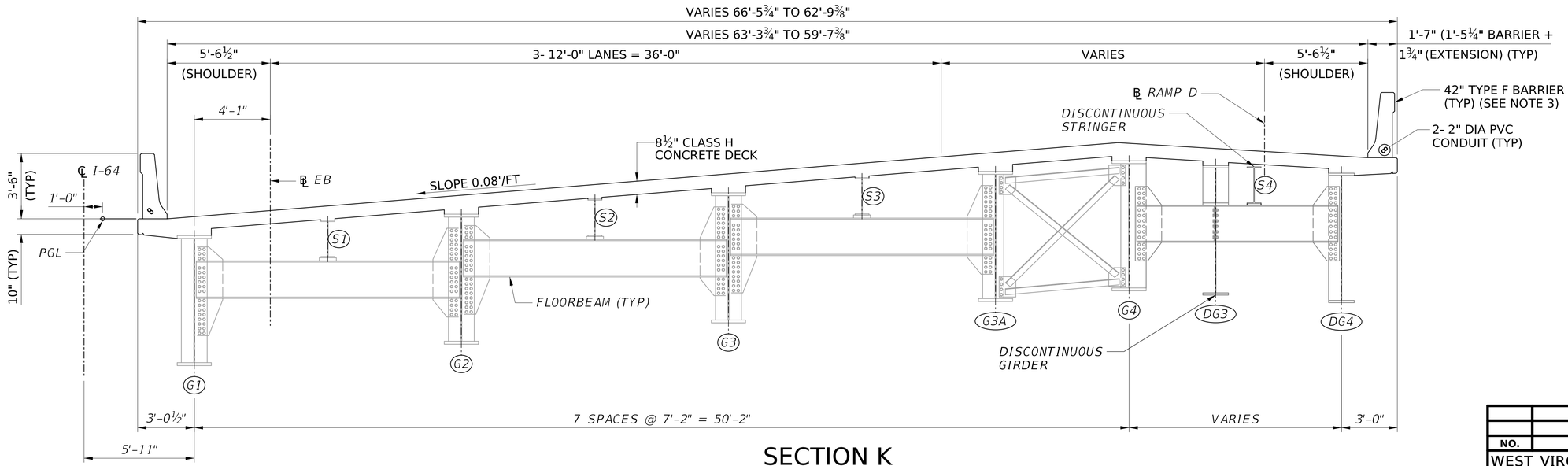

SECTION K
PROPOSED TYPICAL SECTION

(LOOKING AHEAD STATION)

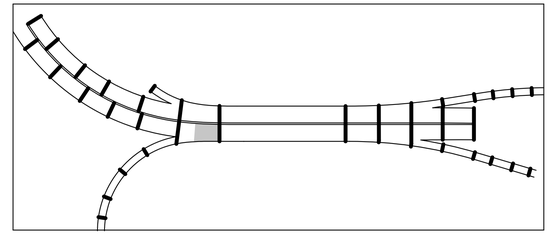

KEY PLAN

NOTES:

1. FOR GENERAL NOTES, SEE SHEETS G11 AND G12.
2. FOR DECK CROSS SLOPE AND SUPERELEVATION INFORMATION, SEE ROADWAY SHEETS.
3. CONSTRUCT ALL BARRIERS PLUMB.

NOT TO SCALE

NO.	REVISION	DATE	BY

WEST VIRGINIA DEPARTMENT OF TRANSPORTATION
DIVISION OF HIGHWAYS
ENGINEERING DIVISION

I-64 OVER KANAWHA RIVER
EUGENE A. CARTER MEMORIAL BRIDGE +3
TYPICAL SECTIONS
SPAN 6 (EB) (2 OF 2)

DESIGNED	DATE
JWB	08/25
DRAWN	
SCN	08/25
CHECKED	
REVIEWED	

HDR ENGINEERING INC.
CONSULTING ENGINEERS
CHARLESTON, WV
681-341-6100

SHEET $TYP06$ OF

BRIDGE NO. 2563.6

pw://pwhdruseas02.intranet.hdr-HDR_US_East_02/Documents/WV_DOT/WVDOT-Eugene_Carter_Bridge_3/6.0_CAD_BIM/6.2_WIP/HDR/6.2.2_Sheet_Files/23_Structure/1.023 Span 6 EB Typical Section KK
$DD-MMM-YYYY HH:MM$
SNOLEN

PROJECT NUMBERS		DISTRICT	COUNTY	SHEET NO.	TOTAL
STATE	FEDERAL				
S320-64-57.44 00	NHPP-0064 (497)D	1	KANAWHA		

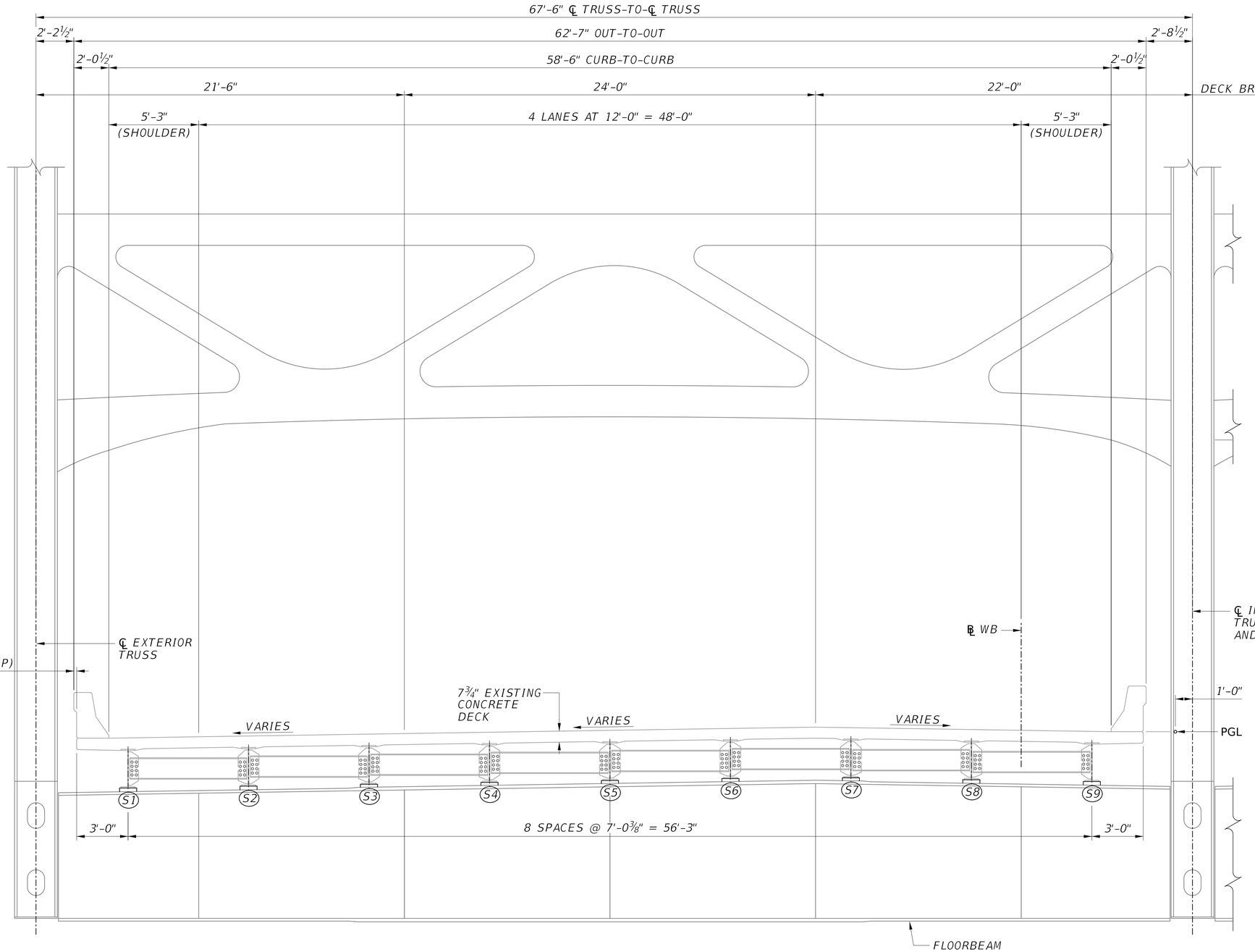

SECTION L
EXISTING TYPICAL SECTION

(LOOKING AHEAD STATION)
(WB SHOWN, EB SIMILAR)

NOT TO SCALE

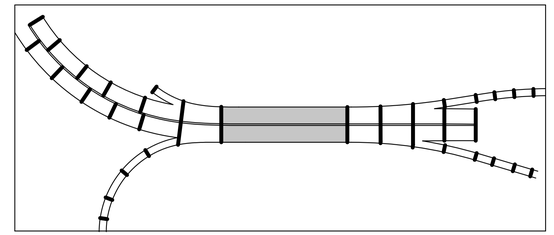

KEY PLAN

NOTES:

1. FOR GENERAL NOTES, SEE SHEETS G11 AND G12.
2. FOR DECK CROSS SLOPE AND SUPERELEVATION INFORMATION, SEE ROADWAY SHEETS.
3. CONSTRUCT ALL BARRIERS PLUMB.

NO.	REVISION	DATE	BY

WEST VIRGINIA DEPARTMENT OF TRANSPORTATION
DIVISION OF HIGHWAYS
ENGINEERING DIVISION

I-64 OVER KANAWHA RIVER
EUGENE A. CARTER MEMORIAL BRIDGE +3
TYPICAL SECTIONS
SPAN 7 (1 OF 2)

DESIGNED	JWB	DATE	08/25
DRAWN	SCN	DATE	08/25
CHECKED			
REVIEWED			

HDR ENGINEERING INC.
CONSULTING ENGINEERS
CHARLESTON, WV
681-341-6100

SHEET OF
BRIDGE NO. 2563.6

SNOLEN $DD-MMM-YYYY HH:MM$ pw://pwhdruseas02.intranet.hdr:HDR_US_East_02/Documents/WV_DOT/WVDOT-Eugene_Carter_Bridge_3/6.0_CAD_BIM/6.2_WIP/HDR/6.2.2_Sheet_Files/23_Structure/1.024 Main Span Typical Section LL

PROJECT NUMBERS		DISTRICT	COUNTY	SHEET NO.	TOTAL
STATE	FEDERAL				
S320-64-57.44 00	NHPP-0064 (497)D	1	KANAWHA		

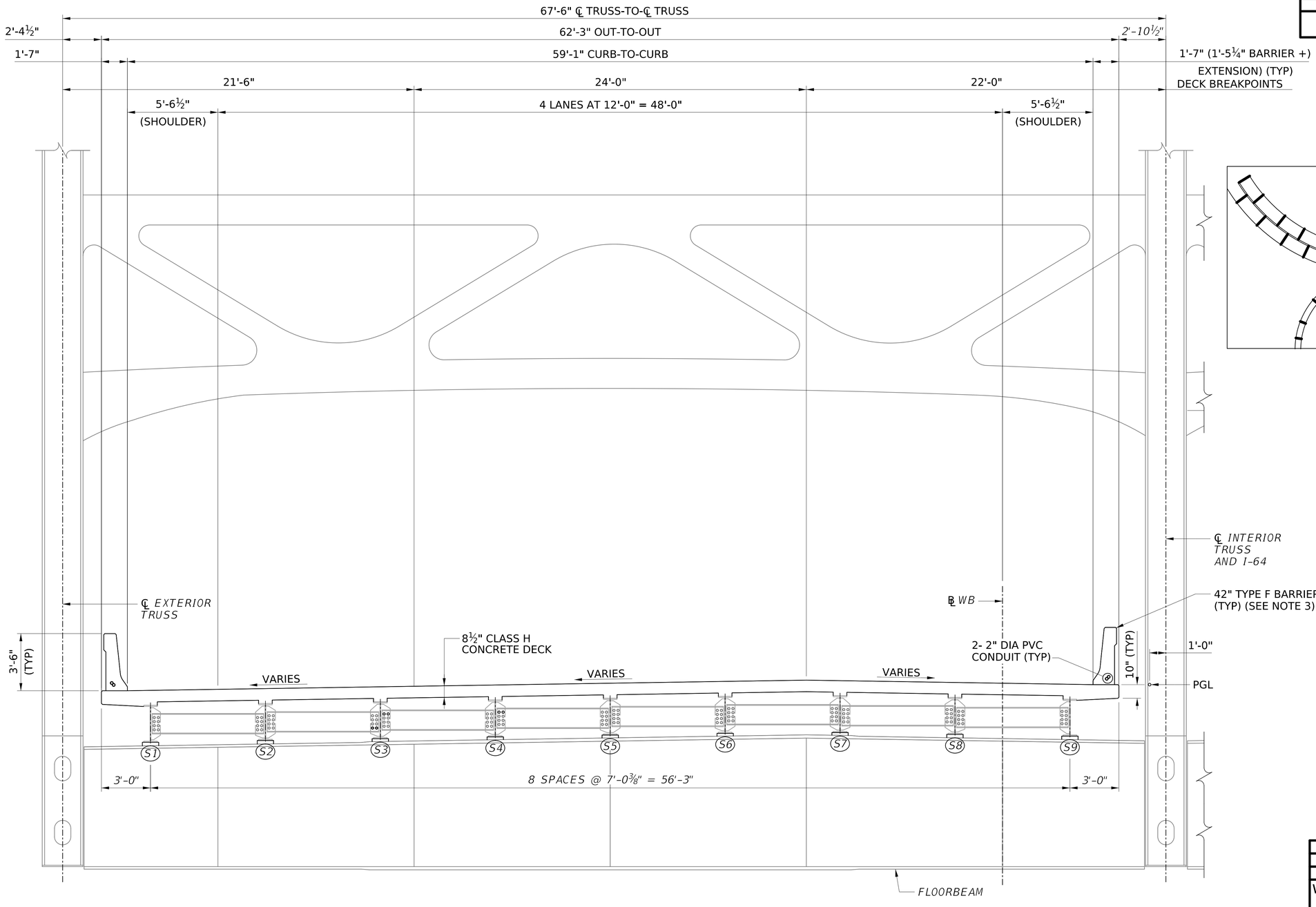

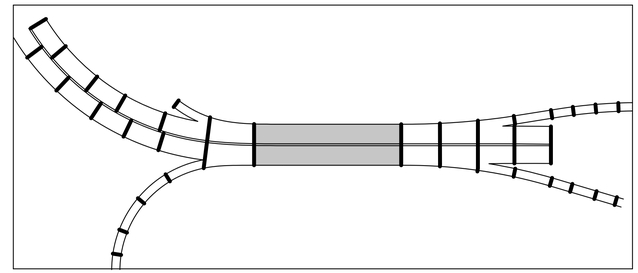

KEY PLAN

NOTES:

1. FOR GENERAL NOTES, SEE SHEETS G11 AND G12.
2. FOR DECK CROSS SLOPE AND SUPERELEVATION INFORMATION, SEE ROADWAY SHEETS.
3. CONSTRUCT ALL BARRIERS PLUMB.

SECTION L
PROPOSED TYPICAL SECTION

(LOOKING AHEAD STATION)
(WB SHOWN, EB SIMILAR)

NOT TO SCALE

NO.	REVISION	DATE	BY

WEST VIRGINIA DEPARTMENT OF TRANSPORTATION
DIVISION OF HIGHWAYS
ENGINEERING DIVISION

I-64 OVER KANAWHA RIVER
EUGENE A. CARTER MEMORIAL BRIDGE +3

TYPICAL SECTIONS
SPAN 7 (2 OF 2)

DESIGNED	JWB	DATE	08/25
DRAWN	SCN		08/25
CHECKED			
REVIEWED			

HDR ENGINEERING INC.
CONSULTING ENGINEERS
CHARLESTON, WV
681-341-6100

SHEET OF
BRIDGE NO. 2563.6

SNOLEN $DD-MMM-YYYY HH:MM$ pw://pwhdruseas02.intranet.hdr:HDR_US_East_02/Documents/WV_DOT/WVDOT-Eugene_Carter_Bridge_3/6.0_CAD_BIM/6.2_WIP/HDR/6.2.2_Sheet_Files/23_Structure/1.025 Main Span Typical Section LL

PROJECT NUMBERS		DISTRICT	COUNTY	SHEET NO.	TOTAL
STATE	FEDERAL				
S320-64-57.44 00	NHPP-0064 (497)D	1	KANAWHA		

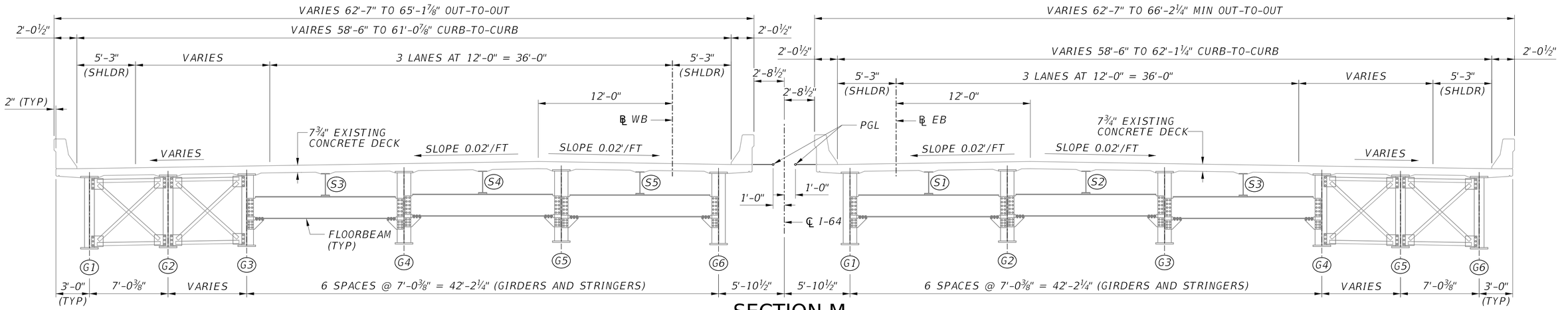

SECTION M
EXISTING TYPICAL SECTION
(LOOKING AHEAD STATION)

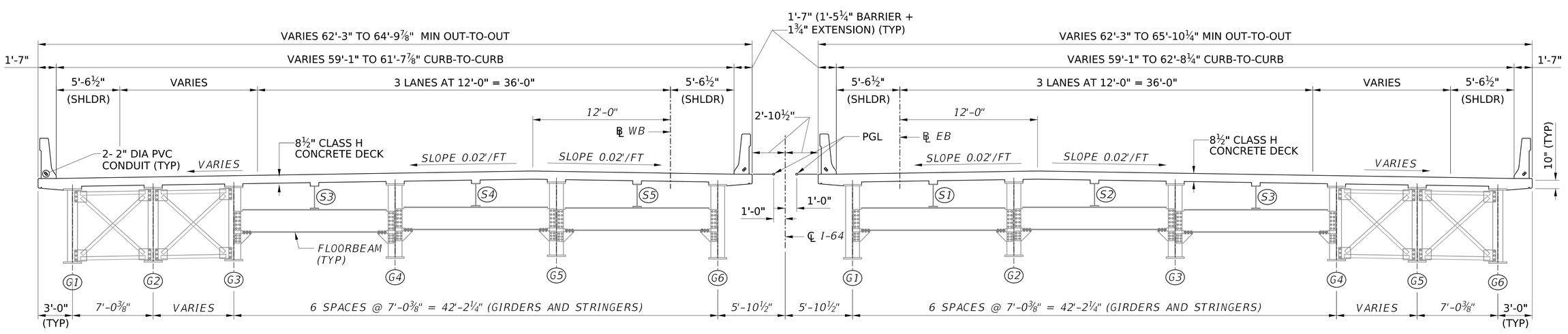

SECTION M
PROPOSED TYPICAL SECTION
(LOOKING AHEAD STATION)

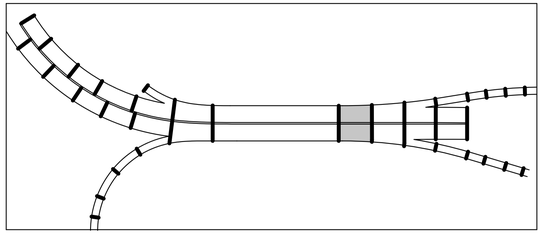

KEY PLAN

NOTES:

1. FOR GENERAL NOTES, SEE SHEETS G11 AND G12.
2. FOR DECK CROSS SLOPE AND SUPERELEVATION INFORMATION, SEE ROADWAY SHEETS.
3. CONSTRUCT ALL BARRIERS PLUMB.

NOT TO SCALE

NO.	REVISION	DATE	BY

WEST VIRGINIA DEPARTMENT OF TRANSPORTATION
DIVISION OF HIGHWAYS
ENGINEERING DIVISION

I-64 OVER KANAWHA RIVER
EUGENE A. CARTER MEMORIAL BRIDGE +3
TYPICAL SECTIONS
SPAN 8

DESIGNED	DATE
JWB	08/25
DRAWN	
SCN	08/25
CHECKED	
REVIEWED	

HDR ENGINEERING INC.
CONSULTING ENGINEERS
CHARLESTON, WV
681-341-6100

SHEET
OF
BRIDGE NO.
2563.6

pw://pwhdruseas02.intranet.hdr:HDR_US_East_02/Documents/WV_DOT/WVDOT-Eugene_Carter_Bridge_3/6.0_CAD_BIM/6.2_CAD_BIM6.2_WIP/HDR/6.2.2_Sheet_Files/23_Structure/1.026 Span 8 Typical Section MM
$DD-MMM-YYYY HH:MM$
SNOLEN

PROJECT NUMBERS		DISTRICT	COUNTY	SHEET NO.	TOTAL
STATE	FEDERAL				
S320-64-57.44 00	NHPP-0064 (497)D	1	KANAWHA		

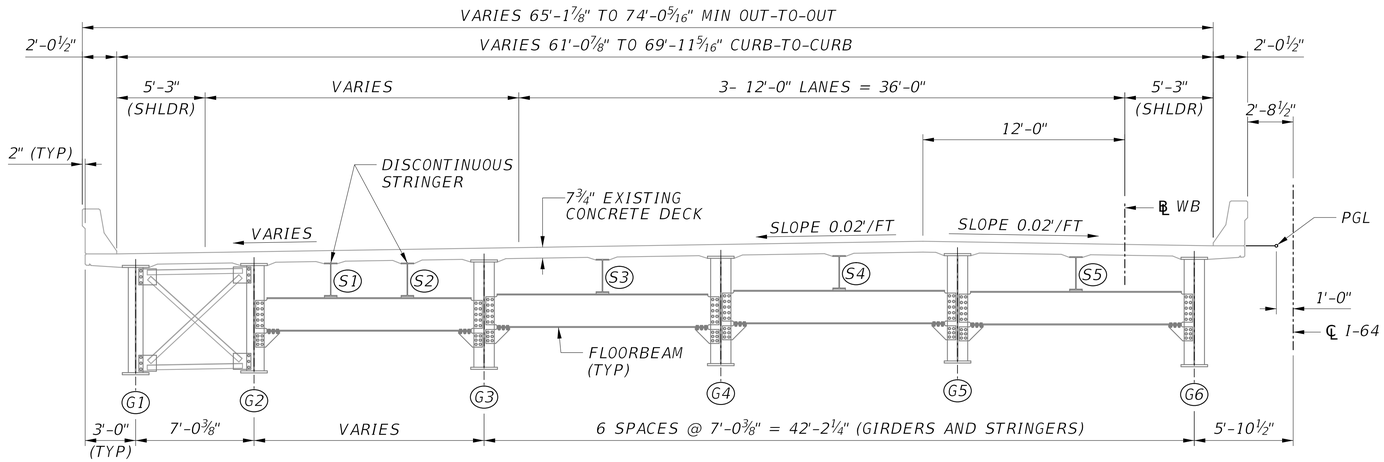

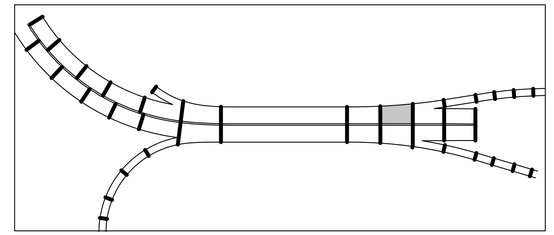

KEY PLAN

SECTION N
EXISTING TYPICAL SECTION

SPAN 9 PIER E SHOWN
(LOOKING AHEAD STATION)

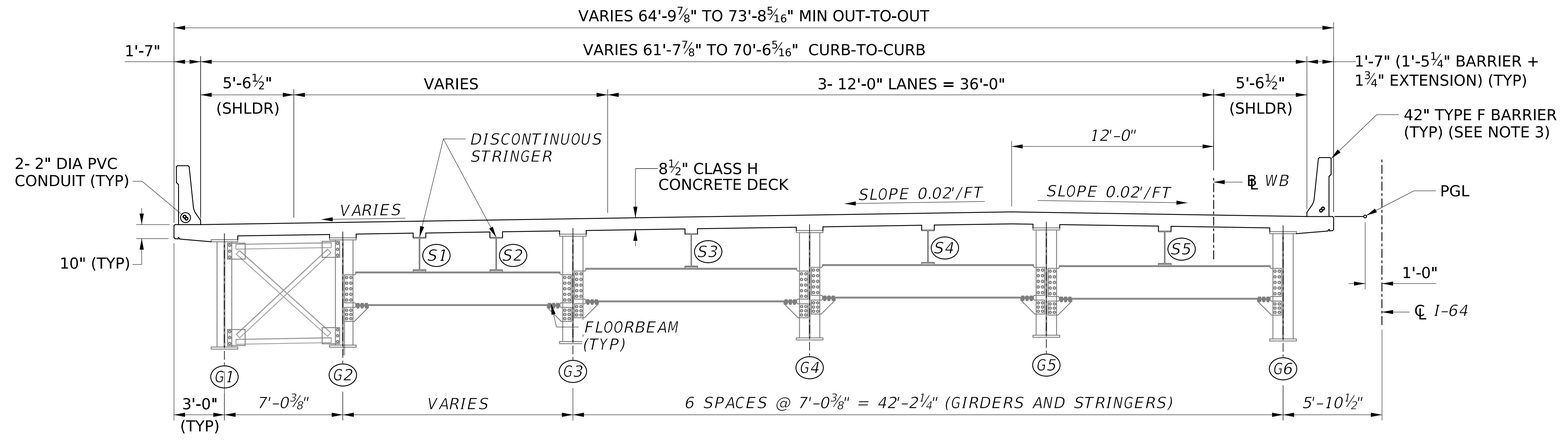

SECTION N
PROPOSED TYPICAL SECTION

SPAN 9 PIER E SHOWN
(LOOKING AHEAD STATION)

NOTES:

1. FOR GENERAL NOTES, SEE SHEETS G11 AND G12.
2. FOR DECK CROSS SLOPE AND SUPERELEVATION INFORMATION, SEE ROADWAY SHEETS.
3. CONSTRUCT ALL BARRIER PLUNB.

NOT TO SCALE

NO.	REVISION	DATE	BY

WEST VIRGINIA DEPARTMENT OF TRANSPORTATION
DIVISION OF HIGHWAYS
ENGINEERING DIVISION

I-64 OVER KANAWHA RIVER
EUGENE A. CARTER MEMORIAL BRIDGE +3

TYPICAL SECTIONS
SPAN 9 (WB)

DESIGNED	DATE
JWB	08/25
DRAWN	
SCN	08/25
CHECKED	
REVIEWED	

HDR ENGINEERING INC.
CONSULTING ENGINEERS
CHARLESTON, WV
681-341-6100

SHEET OF
BRIDGE NO. 2563.6

SNOLEN $DD-MMM-YYYY HH:MM$ pw://pwhdruseas02.intranet.hdr:HDR_US_East_02/Documents/WV_DOT/WVDOT-Eugene_Carter_Bridge_3/6.0_CAD_BIM/6.2_WIP/HDR/6.2.2_Sheet_Files/23_Structure/1.027 Span 9 WB Typical Section NN

PROJECT NUMBERS		DISTRICT	COUNTY	SHEET NO.	TOTAL
STATE	FEDERAL				
S320-64-57.44 00	NHPP-0064 (497)D	1	KANAWHA		

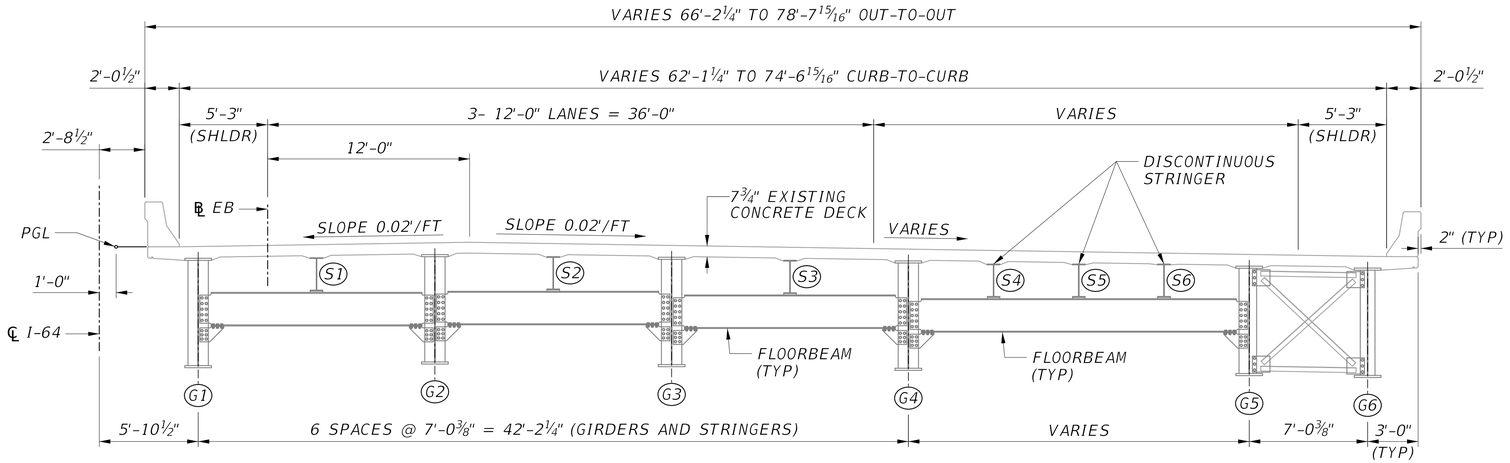

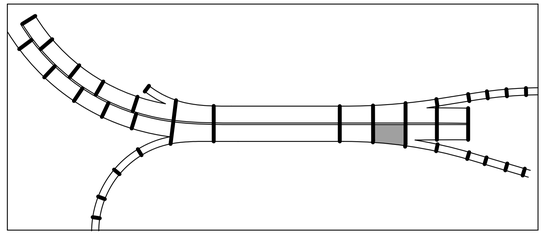

KEY PLAN

SECTION P
EXISTING TYPICAL SECTION

SPAN 9 PIER E SHOWN
(LOOKING AHEAD STATION)

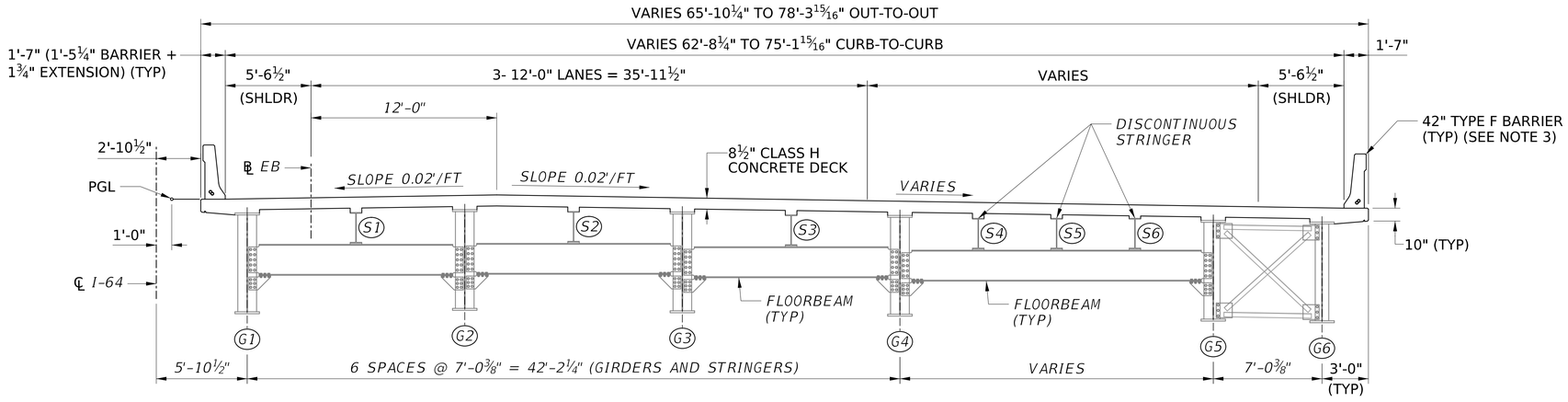

SECTION P
PROPOSED TYPICAL SECTION

SPAN 9 PIER E SHOWN
(LOOKING AHEAD STATION)

NOTES:

1. FOR GENERAL NOTES, SEE SHEETS G11 AND G12.
2. FOR DECK CROSS SLOPE AND SUPERELEVATION INFORMATION, SEE ROADWAY SHEETS.
3. CONSTRUCT ALL BARRIER PLUNB.

NOT TO SCALE

NO.	REVISION	DATE	BY

WEST VIRGINIA DEPARTMENT OF TRANSPORTATION
DIVISION OF HIGHWAYS
ENGINEERING DIVISION

I-64 OVER KANAWHA RIVER
EUGENE A. CARTER MEMORIAL BRIDGE +3

TYPICAL SECTIONS
SPAN 9 (EB)

DESIGNED	DATE
JWB	08/25
DRAWN	
SCN	08/25
CHECKED	
REVIEWED	

HDR ENGINEERING INC.
CONSULTING ENGINEERS
CHARLESTON, WV
681-341-6100

SHEET OF
BRIDGE NO. 2563.6

SNOLEN $DD-MMM-YYYY HH:MM$ pw://pwhdruseas02.intranet.hdr:HDR_US_East_02/Documents/WV_DOT/WVDOT-Eugene_Carter_Bridge_3/6.0_CAD_BIM/6.2_WIP/HDR/6.2.2_Sheet_Files/23_Structure/1.028 Span 9 EB Typical Section PP

PROJECT NUMBERS		DISTRICT	COUNTY	SHEET NO.	TOTAL
STATE	FEDERAL				
S320-64-57.44 00	NHPP-0064 (497)D	1	KANAWHA		

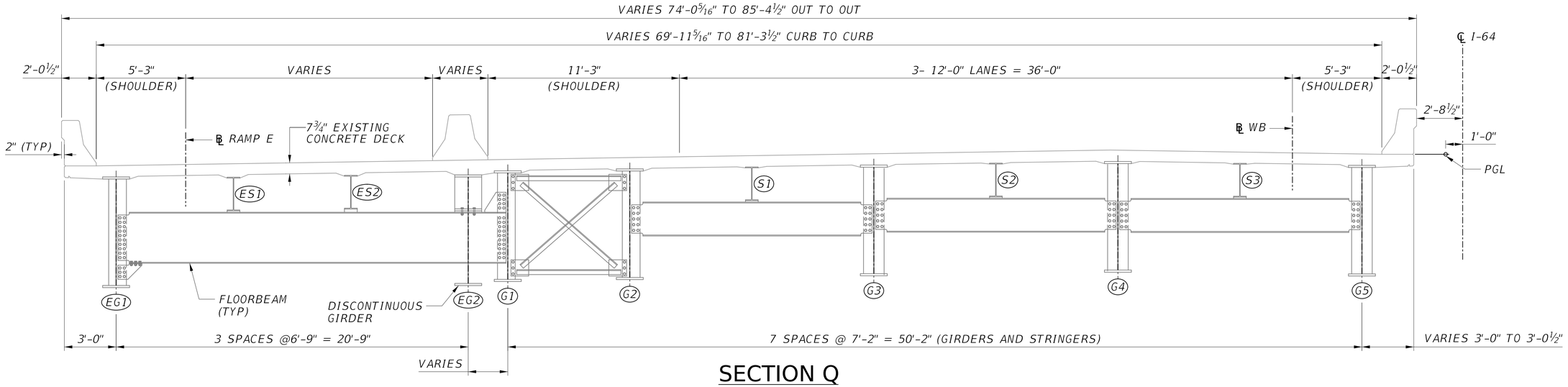

SECTION Q
EXISTING TYPICAL SECTION

(LOOKING AHEAD STATION)
(EASTBOUND SIMILAR)

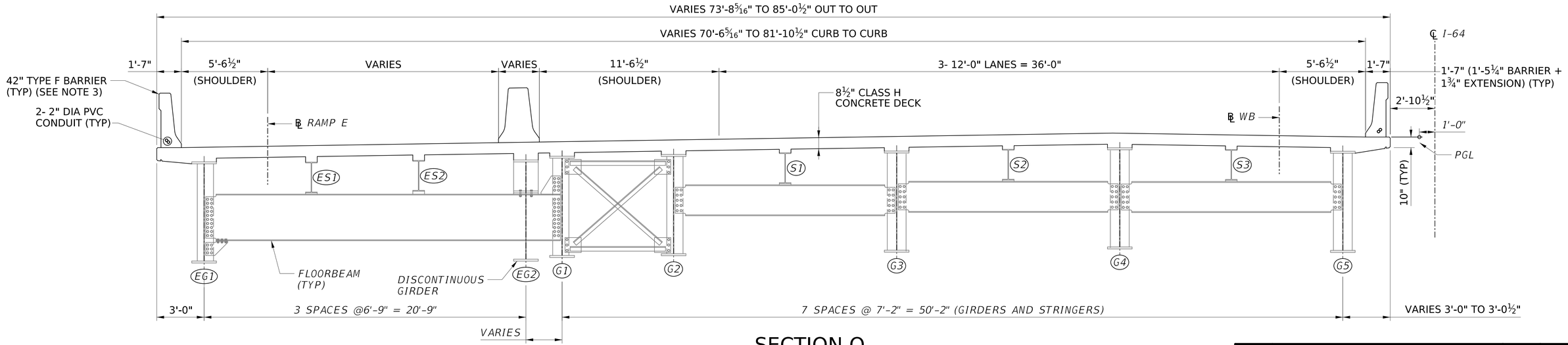

SECTION Q
PROPOSED TYPICAL SECTION

(LOOKING AHEAD STATION)
(EASTBOUND SIMILAR)

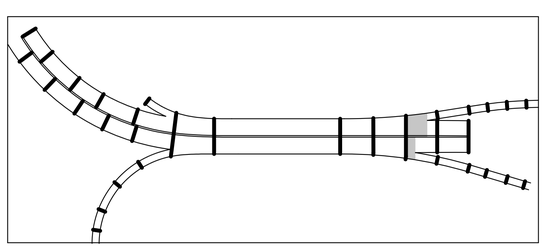

KEY PLAN

NOTES:

1. FOR GENERAL NOTES, SEE SHEETS G11 AND G12.
2. FOR DECK CROSS SLOPE AND SUPERELEVATION INFORMATION, SEE ROADWAY SHEETS.
3. CONSTRUCT ALL BARRIERS PLUMB.

NO.	REVISION	DATE	BY

WEST VIRGINIA DEPARTMENT OF TRANSPORTATION
DIVISION OF HIGHWAYS
ENGINEERING DIVISION

I-64 OVER KANAWHA RIVER
EUGENE A. CARTER MEMORIAL BRIDGE +3
TYPICAL SECTIONS
SPAN 10

DESIGNED	JWB	DATE	08/25
DRAWN	SCN		08/25
CHECKED			
REVIEWED			

HDR ENGINEERING INC.
CONSULTING ENGINEERS
CHARLESTON, WV
681-341-6100

SHEET OF

BRIDGE NO. 2563.6

SNOLEN $DD-MMM-YYYY HH:MM$ pw://pwhdruseas02.intranet.hdr:HDR_US_East_02/Documents/WV_DOT/WVDOT-Eugene_Carter_Bridge_3/6.0_CAD_BIM/6.2_WIP/HDR/6.2.2_Sheet_Files/23_Structure/1.029 Span 10 Typical Section QQ

PROJECT NUMBERS		DISTRICT	COUNTY	SHEET NO.	TOTAL
STATE	FEDERAL				
S320-64-57.44 00	NHPP-0064 (497)D	1	KANAWHA		

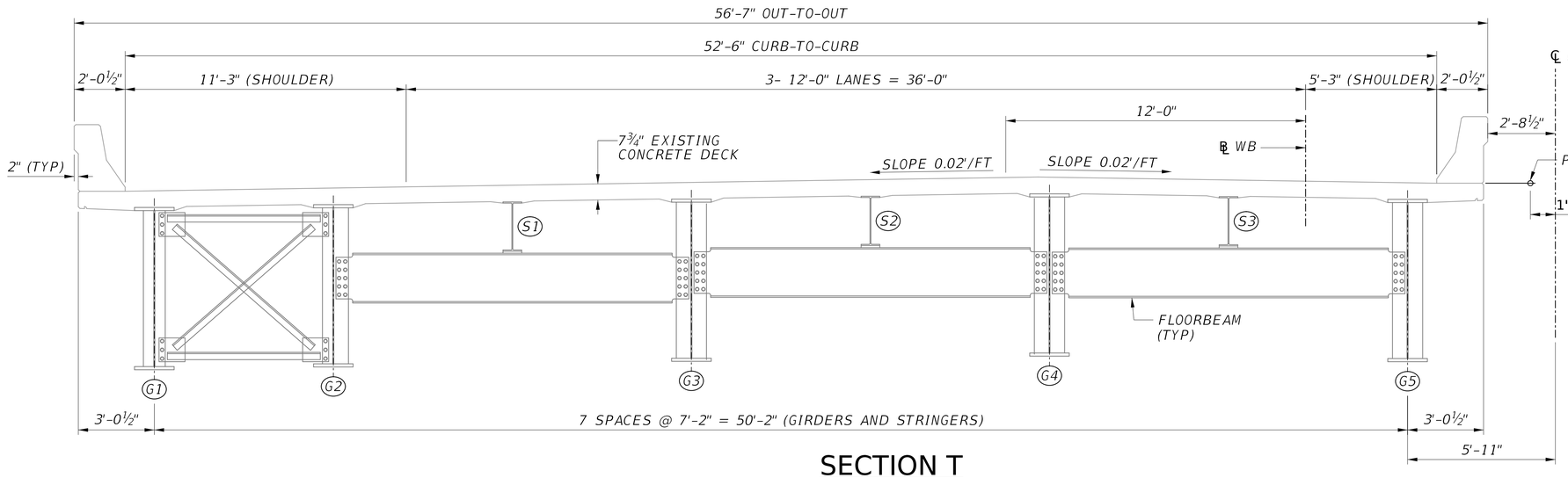

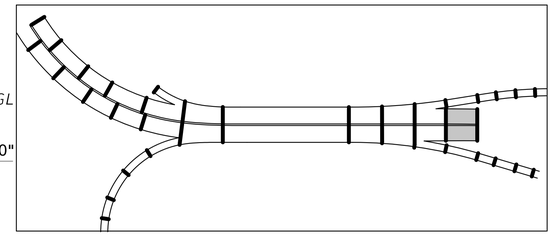

KEY PLAN

SECTION T
EXISTING TYPICAL SECTION

(LOOKING AHEAD STATION)
(EASTBOUND SIMILAR)

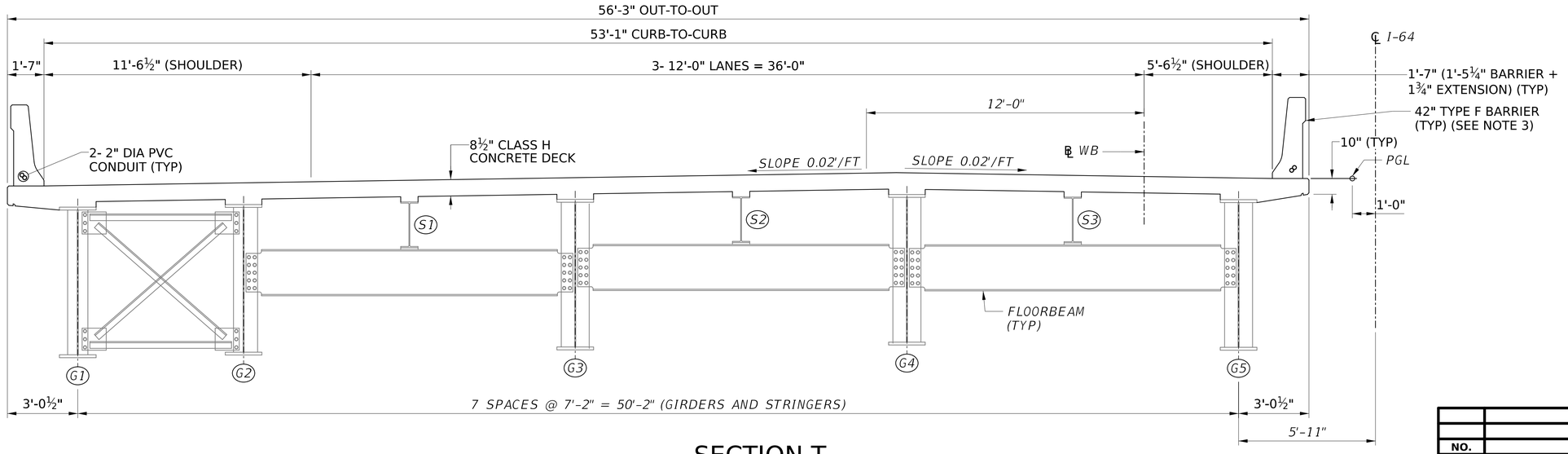

SECTION T
PROPOSED TYPICAL SECTION

(LOOKING AHEAD STATION)
(EASTBOUND SIMILAR)

NOTES:

1. FOR GENERAL NOTES, SEE SHEETS G11 AND G12.
2. FOR DECK CROSS SLOPE AND SUPERELEVATION INFORMATION, SEE ROADWAY SHEETS.
3. CONSTRUCT ALL BARRIER PLUNB.

SCALE : 1 0 1 2 3 ft.
⅜" = 1'-0"

NO.	REVISION	DATE	BY

WEST VIRGINIA DEPARTMENT OF TRANSPORTATION
DIVISION OF HIGHWAYS
ENGINEERING DIVISION

I-64 OVER KANAWHA RIVER
EUGENE A. CARTER MEMORIAL BRIDGE +3

TYPICAL SECTIONS
SPAN 11

DESIGNED	JWB
DATE	08/25
DRAWN	SCN
DATE	08/25
CHECKED	
REVIEWED	

HDR ENGINEERING INC.
CONSULTING ENGINEERS
CHARLESTON, WV
681-341-6100

SHEET
OF
BRIDGE NO. 2563.6

SNOLEN $DD-MMM-YYYY HH:MM$ pw://pwhdruseas02.intranet.hdr:HDR_US_East_02/Documents/WV_DOT/WVDOT-Eugene_Carter_Bridge_3/6.0_CAD_BIM/6.2_CAD_BIM/6.2_WIP/HDR/6.2.2_Sheet_Files/23_Structure/1.029a Span 11 Typical Section TT

PROJECT NUMBERS		DISTRICT	COUNTY	SHEET NO.	TOTAL
STATE	FEDERAL				
S320-64-57.44 00	NHPP-0064 (497)D	1	KANAWHA		

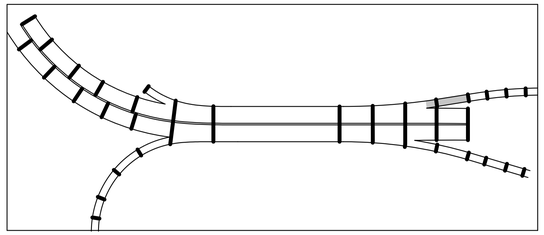

KEY PLAN

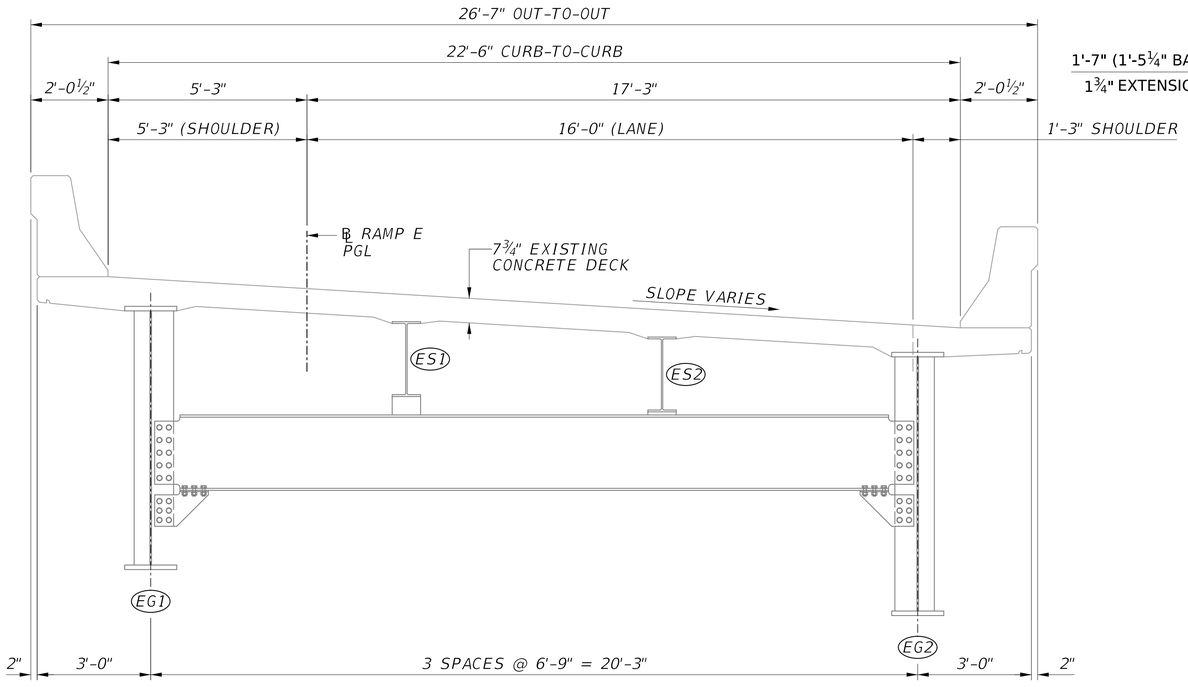

SECTION R
EXISTING TYPICAL SECTION

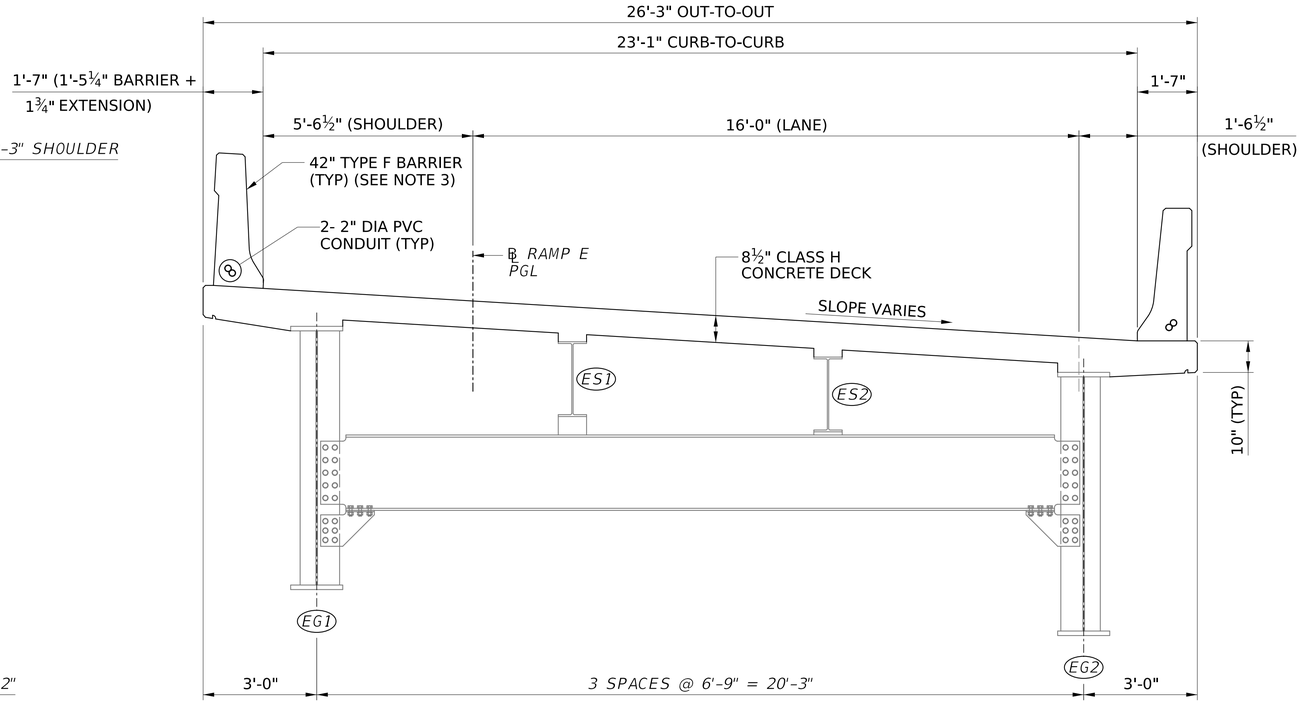

SECTION R
PROPOSED TYPICAL SECTION

NOTES:

1. FOR GENERAL NOTES, SEE SHEETS G11 AND G12.
2. FOR DECK CROSS SLOPE AND SUPERELEVATION INFORMATION, SEE ROADWAY SHEETS.
3. CONSTRUCT HIGH SIDE BARRIER PERPENDICULAR TO THE DECK AND LOW SIDE BARRIER PLUMB.

SCALE : 1 0 1 2 ft.
½" = 1'-0"

NO.	REVISION	DATE	BY

WEST VIRGINIA DEPARTMENT OF TRANSPORTATION
DIVISION OF HIGHWAYS
ENGINEERING DIVISION

I-64 OVER KANAWHA RIVER
EUGENE A. CARTER MEMORIAL BRIDGE +3

TYPICAL SECTIONS
RAMP E, SPANS DE & EE

DESIGNED	DATE
JWB	08/25
DRAWN	
SCN	08/25
CHECKED	
REVIEWED	

HDR ENGINEERING INC.
CONSULTING ENGINEERS
CHARLESTON, WV
681-341-6100

SHEET
OF
BRIDGE NO.
2563.6

SNOLEN $DD-MMM-YYYY HH:MM$ pw://pwhdruseas02.intranet.hdr:HDR_US_East_02/Documents/WV_DOT/WVDOT-Eugene_Carter_Bridge_3/6.0_CAD_BIM/6.2_WIP/HDR/6.2.2_Sheet_Files/23_Structure/1.030 Ramp E Typical Section RR

PROJECT NUMBERS		DISTRICT	COUNTY	SHEET NO.	TOTAL
STATE	FEDERAL				
S320-64-57.44 00	NHPP-0064 (497)D	1	KANAWHA		

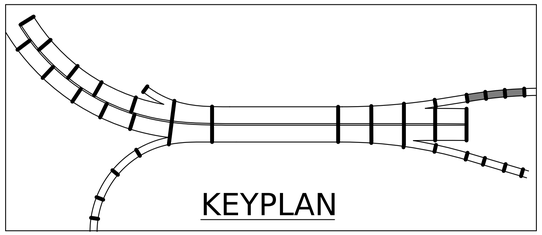

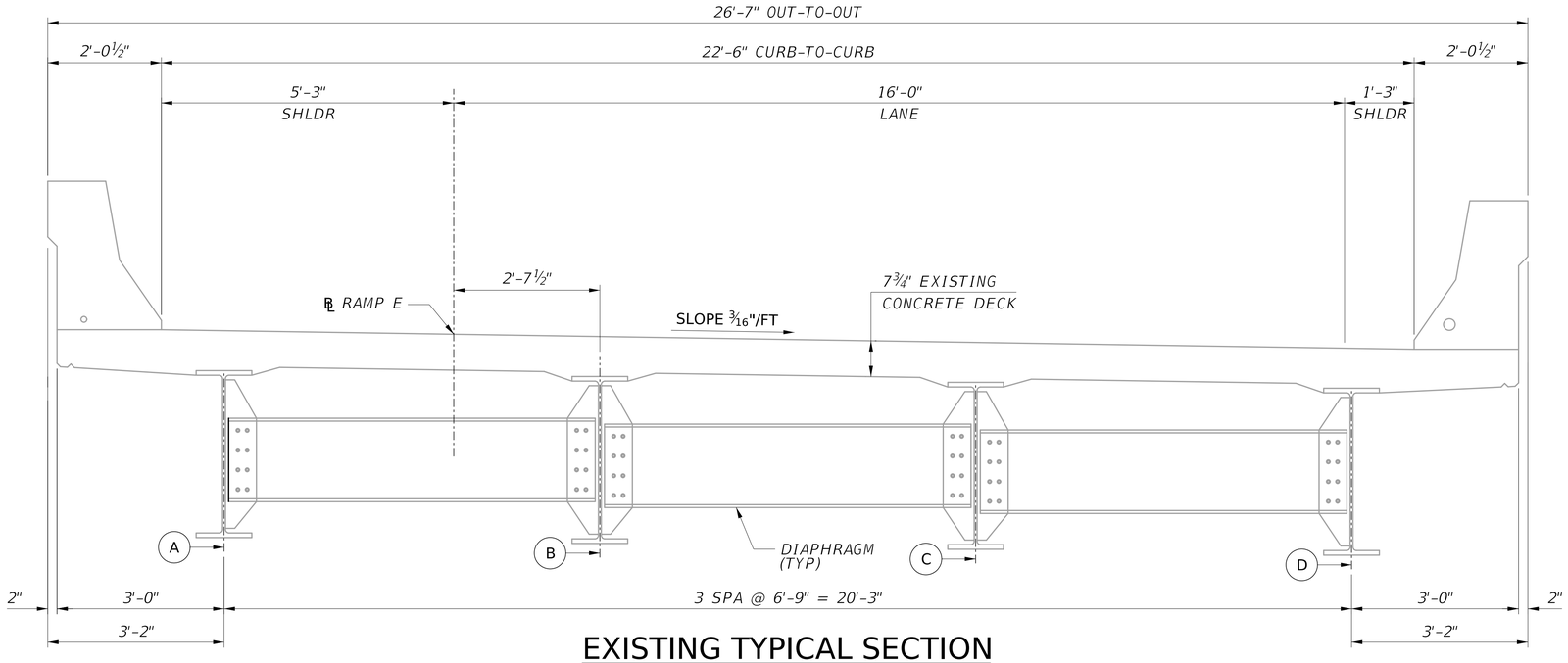

EXISTING TYPICAL SECTION

(LOOKING BACK STATION)

SUPERELEVATION TABLE		
STATION	LEFT RATE	RIGHT RATE
2+33.75	2.80%	-2.80%
5+08.92	2.80%	-2.80%
5+28.92	2.00%	-2.00%
5+43.21	2.00%	-2.00%

(LOOKING BACK STATION)

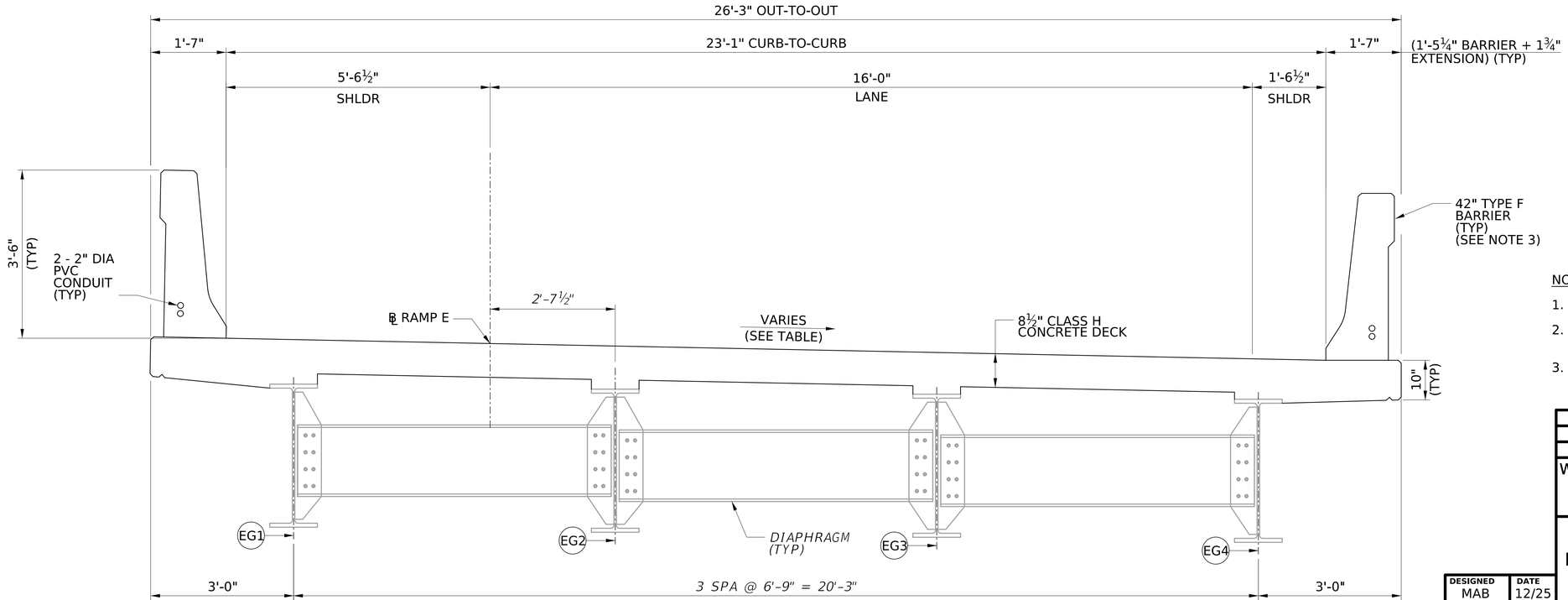

SECTION S - PROPOSED TYPICAL SECTION

(LOOKING BACK STATION)

12 0 12 in.

¾" = 1'-0"

NOTES:

1. FOR GENERAL NOTES, SEE SHEET XX THRU XX.
2. FOR DECK CROSS SLOPE AND SUPERELEVATION INFORMATION, SEE ROADWAY PLANS.
3. CONSTRUCT HIGH SIDE BARRIER PERPENDICULAR TO THE DECK AND THE LOW SIDE BARRIER PLUMB.

NO.	REVISION	DATE	BY

WEST VIRGINIA DEPARTMENT OF TRANSPORTATION
DIVISION OF HIGHWAYS
ENGINEERING DIVISION

I-64 OVER KANAWHA RIVER
EUGENE A. CARTER MEMORIAL BRIDGE +3

TYPICAL SECTIONS RAMP E
SPANS E1 - E3

DESIGNED	MAB	DATE	12/25
DRAWN	DJC		12/25
CHECKED			
REVIEWED			

Mead & Hunt

MEAD & HUNT INC.
CONSULTING ENGINEERS
CHARLESTON, WV
304-345-6712

SHEET OF

BRIDGE NO. 2563.6

X:\324160\251911.01\TECH\Structures\Ramp E\sheets\str_typ_001_Ramp E_Eugene Carter Memorial Bridge.dgn
$DD-MMM-YYYY HH:MM$
1420djc

PROJECT NUMBERS		DISTRICT	COUNTY	SHEET NO.	TOTAL
STATE	FEDERAL				
S320-64-57.44 00	NHPP-0064 (497)D	1	KANAWHA		

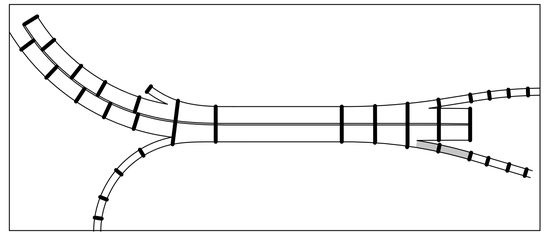

KEY PLAN

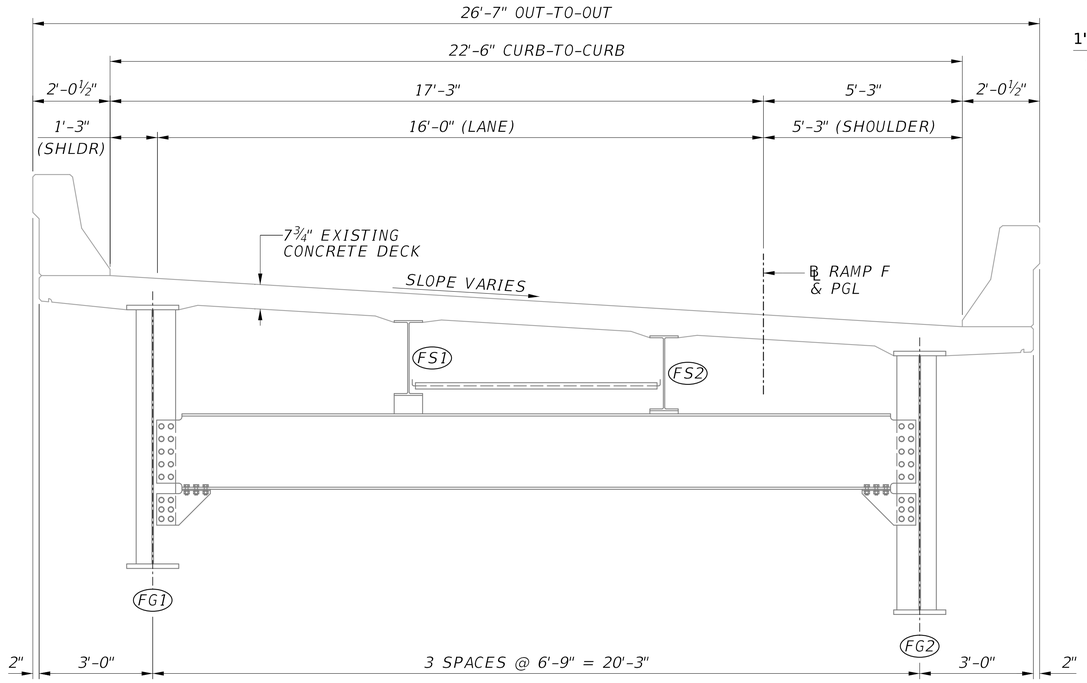

SECTION U
EXISTING TYPICAL SECTION

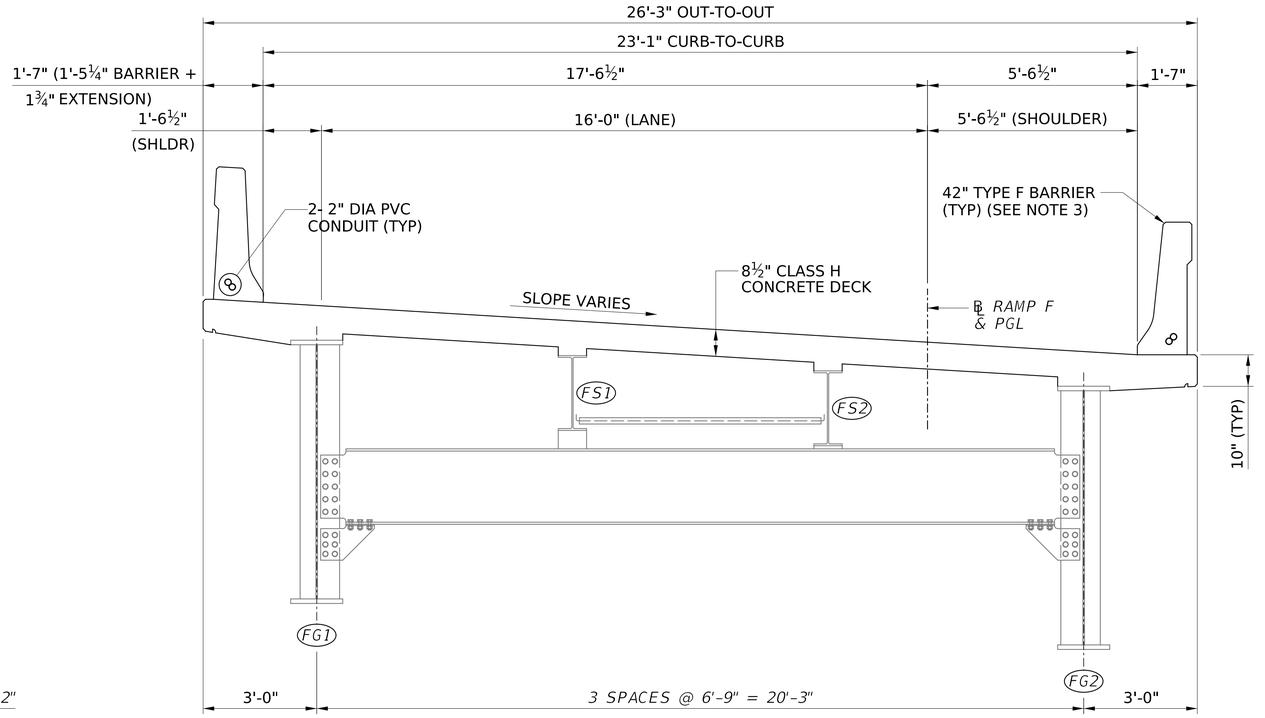

SECTION U
PROPOSED TYPICAL SECTION

NOTES:

1. FOR GENERAL NOTES, SEE SHEETS G11 AND G12.
2. FOR DECK CROSS SLOPE AND SUPERELEVATION INFORMATION, SEE ROADWAY SHEETS.
3. CONSTRUCT HIGH SIDE BARRIER PERPENDICULAR TO THE DECK AND LOW SIDE BARRIER PLUMB.

SCALE : 1 0 1 2 ft.
½" = 1'-0"

NO.	REVISION	DATE	BY

WEST VIRGINIA DEPARTMENT OF TRANSPORTATION
DIVISION OF HIGHWAYS
ENGINEERING DIVISION

I-64 OVER KANAWHA RIVER
EUGENE A. CARTER MEMORIAL BRIDGE +3

TYPICAL SECTIONS
RAMP F, SPANS DF & EF

DESIGNED	DATE
JWB	08/25
DRAWN	DATE
SCN	08/25
CHECKED	
REVIEWED	

HDR ENGINEERING INC.
CONSULTING ENGINEERS
CHARLESTON, WV
681-341-6100

SHEET
OF
BRIDGE NO.
2563.6

SNOLEN $DD-MMM-YYYY HH:MM$ pw://pwhdruseas02.intranet.hdr:HDR_US_East_02/Documents/WV_DOT/WVDOT-Eugene_Carter_Bridge_3/6.0_CAD_BIM/6.2_WIP/HDR/6.2.2_Sheet_Files/23_Structure/1.032 Ramp F Typical Section UU

PROJECT NUMBERS		DISTRICT	COUNTY	SHEET NO.	TOTAL
STATE	FEDERAL				
S320-64-57.44 00	NHPP-0064 (497)D	1	KANAWHA		

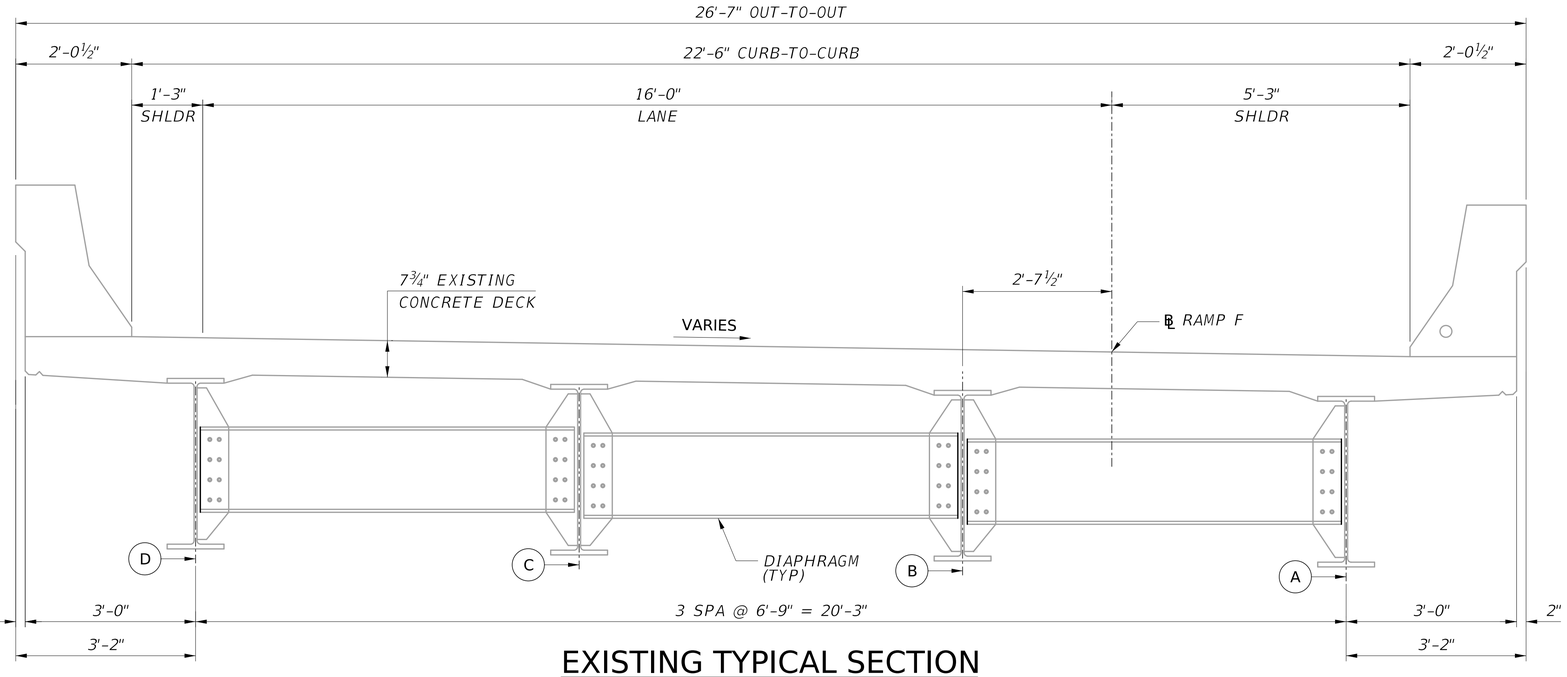

EXISTING TYPICAL SECTION

(LOOKING AHEAD STATION)

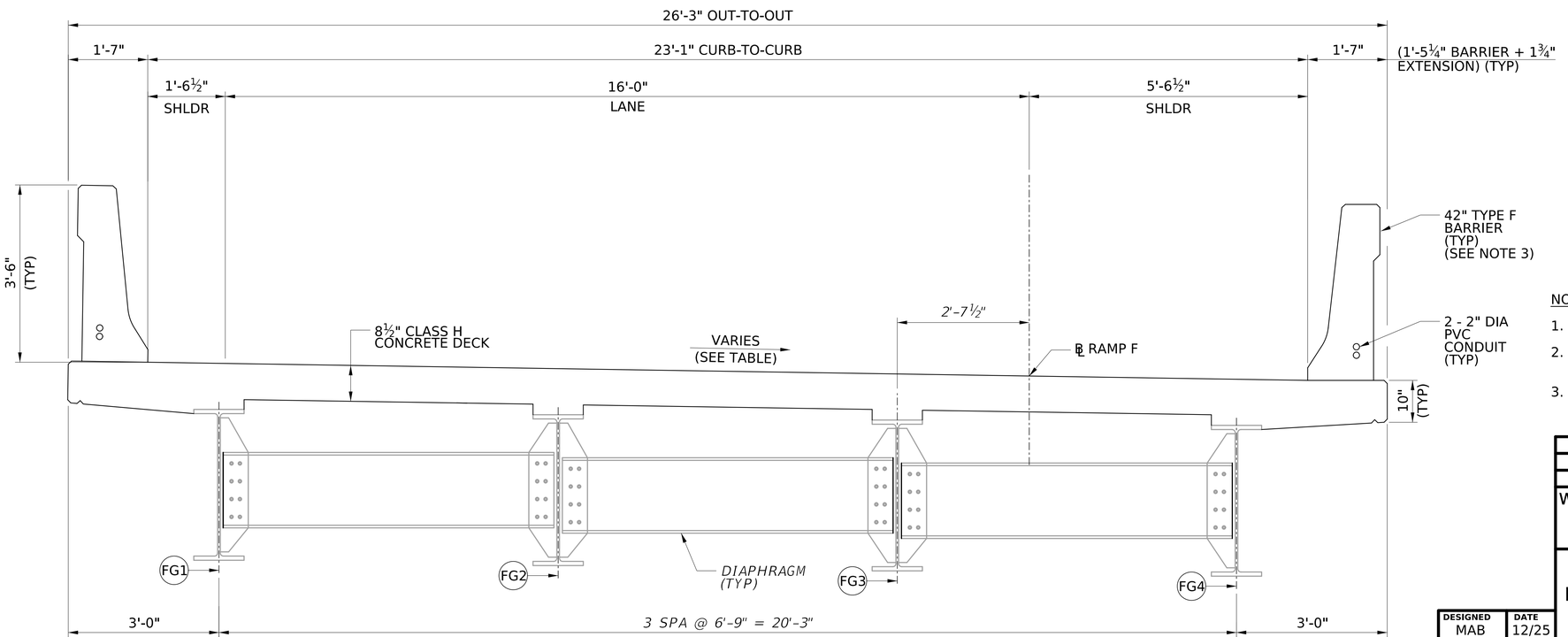

SECTION V - PROPOSED TYPICAL SECTION

(LOOKING AHEAD STATION)

12 0 12 in.

¾" = 1'-0"

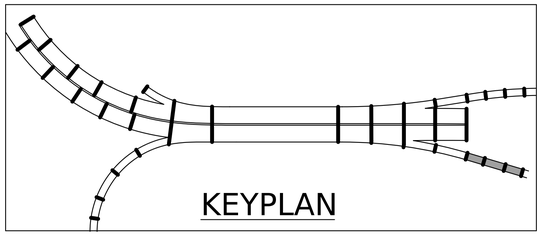

SUPERELEVATION TABLE		
STATION	LEFT RATE	RIGHT RATE
4+64.63	2.80%	-2.80%
4+84.63	2.00%	-2.00%

(LOOKING AHEAD STATION)

NOTES:

1. FOR GENERAL NOTES, SEE SHEET XX THRU XX.
2. FOR DECK CROSS SLOPE AND SUPERELEVATION INFORMATION, SEE ROADWAY PLANS.
3. CONSTRUCT HIGH SIDE BARRIER PERPENDICULAR TO THE DECK AND THE LOW SIDE BARRIER PLUMB.

NO.	REVISION	DATE	BY

WEST VIRGINIA DEPARTMENT OF TRANSPORTATION
DIVISION OF HIGHWAYS
ENGINEERING DIVISION

I-64 OVER KANAWHA RIVER
EUGENE A. CARTER MEMORIAL BRIDGE +3

TYPICAL SECTIONS RAMP F SPANS F1 - F3

DESIGNED	MAB	DATE	12/25
DRAWN	DJC		12/25
CHECKED			
REVIEWED			

Mead & Hunt

MEAD & HUNT INC.
CONSULTING ENGINEERS
CHARLESTON, WV
304-345-6712

SHEET OF

BRIDGE NO. 2563.6

X:\324160\251911.01\TECH\Structures\Ramp F\sheets\str_typ_001_Ramp F_Eugene Carter Memorial Bridge.dgn
$DD-MMM-YYYY HH:MM$
1420djc

PROJECT NUMBERS		DISTRICT	COUNTY	SHEET NO.	TOTAL
STATE	FEDERAL				
S320-64-57.44 00	NHPP-0064 (497)D	1	KANAWHA	$TGN1$	

GENERAL NOTES

GOVERNING SPECIFICATIONS

THE WEST VIRGINIA DEPARTMENT OF TRANSPORTATION, DIVISION OF HIGHWAYS, STANDARD SPECIFICATIONS ROADS AND BRIDGES, ADOPTED 2023 AS AMENDED BY THE WEST VIRGINIA DEPARTMENT OF TRANSPORTATION, DIVISION OF HIGHWAYS, SUPPLEMENTAL SPECIFICATIONS, DATED JANUARY 2026, THE CONTRACT DOCUMENTS AND THE CONTRACT PLANS ARE THE GOVERNING PROVISIONS APPLICABLE TO THIS PROJECT.

CORPORATION LIMITS

THIS PROJECT IS WITHIN THE CORPORATION LIMITS OF THE CITY OF CHARLESTON. ALL APPLICABLE B&O TAXES SHALL APPLY.

ENGINEER REFERENCE

ENGINEER REFERENCED THROUGHOUT THE PLANS SHALL BE READ AS THE DISTRICT CONSTRUCTION ENGINEER, OR HIS/HER DESIGNEE, UNLESS OTHERWISE NOTED.

GENERAL

ALL DIMENSIONS SHOWN ARE HORIZONTAL OR VERTICAL UNLESS OTHERWISE NOTED.

ALL SUPERSTRUCTURE DIMENSIONS ARE BASED ON A NORMAL TEMPERATURE OF 68° F.

ALL STATIONS AND ELEVATIONS ARE IN FEET, UNLESS NOTED.

THE CONTRACTOR SHALL REFER TO THE ORIGINAL DESIGN/SHOP DRAWINGS FOR THE EXISTING BRIDGE DETAILS. THE DEPARTMENT DOES NOT GUARANTEE THE ACCURACY OF THESE DRAWINGS.

IT SHALL BE THE CONTRACTOR'S RESPONSIBILITY TO VERIFY DIMENSIONS AFFECTING ALL WORK IN THE FIELD. NO SEPARATE OR ADDITIONAL COMPENSATION WILL BE ALLOWED FOR THIS WORK.

AREAS OF REPAIR AS SHOWN AND NOTED ON THE DRAWINGS INDICATE THE APPROXIMATE SCOPE OF THE REPAIR WORK TO BE DONE.

ASBESTOS INSPECTION HAS BEEN PERFORMED, AND NO ASBESTOS CONTAINING MATERIAL (ACM) WAS IDENTIFIED. DURING ANY PHASE OF DISMANTLING, SHOULD ANY SUSPECT ACM BE DISCOVERED, ALL WORK SHALL HALT UNTIL SUCH TIME THAT PROPER SAMPLING AND TESTING CAN BE PERFORMED. SECTION 681 OF THE STANDARD SPECIFICATIONS SHALL BE FOLLOWED FOR THE REMOVAL OF ANY ACM IDENTIFIED DURING CONSTRUCTION.

THE CONTRACTOR SHALL NOT PLACE ANY TEMPORARY OR PERMANENT MATERIAL BELOW THE ORDINARY HIGH WATER LEVEL TO PROVIDE CONSTRUCTION ACCESS OR FOR ANY OTHER PURPOSE.

DESIGN

UNLESS NOTED OTHERWISE, ALL REPAIRS HAVE BEEN DESIGNED WITH THE LOAD AND RESISTANCE FACTOR DESIGN METHOD (LRFD) IN ACCORDANCE WITH THE AASHTO LRFD BRIDGE DESIGN SPECIFICATIONS, 10th EDITION DATED 2024, USING HL-93 LOADING. LIVE LOAD DISTRIBUTION WAS BASED ON A SIMPLIFIED ANALYSIS USING AASHTO DISTRIBUTION FACTORS FOR SPANS E1-E3 AND F1-F3 AND BASED ON A REFINED ANALYSIS FOR ALL OTHER UNITS.

THE DESIGN PROVIDES FOR AN ADDITIONAL WEARING SURFACE OF 25 POUNDS PER SQUARE FOOT OF ROADWAY SURFACE. THIS ADDITIONAL WEARING SURFACE IS NOT INCLUDED IN THE CONTRACT.

THE DESIGN PROVIDES FOR AN ALLOWANCE OF 15 POUNDS PER SQUARE FOOT OF DECK AREA FORMED USING PERMANENT METAL DECK FORMS (WEIGHT OF FORMS PLUS WEIGHT OF CONCRETE IN THE FLUTES OF FORMS).

THE STRUCTURE IS DESIGNED TO SEISMIC PERFORMANCE ZONE 1. THE BRIDGE IS CLASSIFIED AS AN "ESSENTIAL BRIDGE" FOR SEISMIC DESIGN.

THE SUPERSTRUCTURE HAS BEEN DESIGNED AS A COMPOSITE SECTION.

THE FOLLOWING LOAD MODIFIERS HAVE BEEN ASSUMED:

DUCTILITY FACTOR = 1.00

REDUNDANCY FACTOR = 1.00 FOR REDUNDANT ELEMENTS

REDUNDANCY FACTOR = 1.05 FOR FRACTURE-CRITICAL ELEMENTS
(SUCH AS GIRDERS IN 2-GIRDER UNITS, FLOORBEAMS, AND TRUSS TENSION MEMBERS)

IMPORTANCE FACTOR = 1.00

DESIGN STRENGTHS

CLASS B CONCRETE	f'c = 3,000 PSI	n = 9
CLASS H CONCRETE	f'c = 4,000 PSI	n = 8
CLASS K CONCRETE	f'c = 4,000 PSI	n = 8

REFER TO PROJECT SPECIFICATIONS AND SPECIAL PROVISIONS FOR ULTRA HIGH PERFORMANCE CONCRETE, RAPID SET CEMENTITIOUS PATCHING MATERIAL AND OTHER SPECIALIZED MATERIALS.

REINFORCING STEEL - AASHTO M31, GRADE 60	FY = 60,000 PSI
STRUCTURAL STEEL – AASHTO M270, GRADE 50 (UNLESS NOTED)	FY = 50,000 PSI FU = 65,000 PSI
ANCHOR BOLTS – ASTM F1554, GRADE 105	FY = 105,000 PSI

CONCRETE

CLASS B CONCRETE SHALL BE USED IN THE APPROACH SLABS AND PORTIONS OF THE ABUTMENTS, WINGWALLS, AND PIERS REBUILT DURING CONSTRUCTION.

CLASS H CONCRETE SHALL BE USED FOR THE BRIDGE DECK AND SEMI-INTEGRAL CONCRETE END DIAPHRAGMS.

CLASS K CONCRETE SHALL BE USED FOR BARRIERS.

ULTRA HIGH PERFORMANCE CONCRETE SHALL BE USED AT LINK SLABS, AS INDICATED.

RAPID SET CEMENTITIOUS PATCHING MATERIAL SHALL BE USED FOR PATCHING OF SUBSTRUCTURE AS INDICATED IN THE PLANS.

A WATER REDUCING RETARDING ADMIXTURE IN ACCORDANCE WITH SECTION 707.2 OF THE SPECIFICATIONS SHALL BE USED IN ALL CLASS H OR K SUPERSTRUCTURE CONCRETE. RETARDER WILL NOT BE REQUIRED FOR TEMPERATURES BELOW 50 DEGREES F, BUT WATER REDUCING ADMIXTURE SHALL BE USED. THE CONTRACTOR'S ATTENTION IS CALLED TO THE TEST REQUIREMENTS FOR THE RETARDER ADMIXTURE. PAYMENT SHALL BE INCIDENTAL TO CLASS H OR CLASS K CONCRETE.

REPAIR ANY AREAS DAMAGED BY THE CONTRACTOR BEYOND THE REMOVAL LIMITS AT NO ADDITIONAL COST TO THE DIVISION AND TO THE SATISFACTION OF THE ENGINEER.

CHAMFER ALL EXPOSED EDGES OF SUBSTRUCTURE CONCRETE 1"x1" AND SUPERSTRUCTURE CONCRETE ¾"x¾", UNLESS NOTED.

WHENEVER CONCRETE IS PLACED USING A CONCRETE PUMP, A BACK-UP PLACEMENT METHOD SHALL BE PROVIDED TO AVOID INTERRUPTION TO THE CONCRETE PLACEMENT CAUSED BY A BREAKDOWN OF THE PUMP.

ALL HORIZONTAL CONSTRUCTION JOINTS BETWEEN PLACEMENTS SHALL BE RAKE FINISHED, UNLESS NOTED.

DECK SLAB

THE DECK SLAB HAS BEEN DESIGNED IN ACCORDANCE WITH THE EMPIRICAL METHOD IN THE AASHTO LRFD BRIDGE DESIGN SPECIFICATIONS, AND WVDOH REQUIREMENTS. IN SOME LOCATIONS, TRANSVERSE REINFORCING HAS BEEN INCREASED DUE TO PHASING, AND NORMAL NEGATIVE MOMENT REINFORCEMENT HAS BEEN EXTENDED.

THE DECK SLAB SHALL BE PLACED IN THE SEQUENCE INDICATED ON THE PLANS.

USE PERMANENT METAL DECK FORMS (SIP FORMS) TO CONSTRUCT THE DECK SLAB BETWEEN BEAMS.

CONCRETE DECK SLAB SHALL BE FINISHED IN ACCORDANCE WITH SECTION 601.11.4.

BARRIERS SHALL NOT BE PLACED IN A SPAN UNTIL THE DECK SLAB IN THAT SPAN AND IN IMMEDIATELY ADJACENT SPANS HAS BEEN COMPLETED IN ACCORDANCE WITH SECTION 601.8.7.

SLIP FORMING OF BARRIERS IS PERMITTED IN ACCORDANCE WITH SECTION 601.8.8.

THE CONTRACTOR IS RESPONSIBLE FOR VERIFYING THE ADEQUACY AND STABILITY OF THE EXISTING BEAMS DURING EXISTING DECK REMOVAL AND INTERMEDIATE PERIOD WHEN DECK IS NOT PRESENT (BASED ON THE CONTRACTOR'S MEANS, METHODS, AND CONSTRUCTION SCHEDULE), AND DURING DECK PLACEMENT IF PLACEMENT DEVIATES FROM THE ASSUMPTIONS SHOWN IN THE PLANS.

DECK SLAB (CONTINUED)

DO NOT USE FORM SUPPORT SYSTEMS THAT WILL CAUSE OVERSTRESS OR DEFORMATION IN PERMANENT BRIDGE MEMBERS DEEMED UNACCEPTABLE BY THE DIVISION. SUPPORT OVERHANG FORMS FROM THE BOTTOM FLANGE OF THE FASCIA BEAMS OR PROVIDE BRACING TO PREVENT WEB BUCKLING DUE TO LOADS FROM WEB-BEARING SUPPORT SYSTEMS, OR ANALYZE BEAMS TO CONFIRM ADEQUACY FOR WEB-BEARING SUPPORT SYSTEMS.

USE REMOVABLE FORMS TO CONSTRUCT DECK OVERHANGS. THE CONTRACTOR'S FORMING PLAN SHALL BE SUBMITTED TO THE DIVISION FOR APPROVAL PRIOR TO THE PLACEMENT OF CONCRETE. FORMING DESIGN SHALL BE BY A PROFESSIONAL ENGINEER REGISTERED IN THE STATE OF WEST VIRGINIA, WHO SHALL ALSO VERIFY THAT THE DESIGN IS UTILIZED.

THE CONTRACTOR IS RESPONSIBLE FOR DETERMINING THE ANTICIPATED DEFLECTION OF THE EXISTING BEAMS DURING DECK PLACEMENT USING THE PROCEDURE SHOWN ON THE DECK ELEVATION SHEETS IN THESE PLANS. THIS PROCEDURE INCLUDES SURVEYING EXISTING ELEVATIONS, MEASURING EXISTING DECK THICKNESS, MEASURING BEAM REBOUND FOLLOWING EXISTING DECK REMOVAL, AND CALCULATING ANTICIPATED DEFLECTION BASED ON THE RATIO OF THE NEW VERSUS EXISTING DECK LOADS.

THE CONTRACTOR SHALL MEASURE THE THICKNESS OF THE EXISTING DECK OVER THE BEAMS AND EXERCISE EXTREME CARE WHEN CUTTING/REMOVING THE EXISTING DECK NOT TO CUT OR OTHERWISE DAMAGE THE STEEL BEAMS. ANY DAMAGE CAUSED WILL BE THE RESPONSIBILITY OF THE CONTRACTOR AND MUST BE REPAIRED TO THE SATISFACTION OF THE DIVISION.

THE FOLLOWING ASSUMPTIONS OF CONSTRUCTION MEANS AND METHODS WERE MADE FOR THE ANALYSIS AND CHECK OF THE SUPERSTRUCTURE. THE CONTRACTOR IS RESPONSIBLE FOR THE DESIGN OF THE FORMWORK SUPPORT SYSTEM WITHIN THESE PARAMETERS AND WILL ASSUME RESPONSIBILITY FOR SUPERSTRUCTURE ANALYSIS FOR DEVIATION FROM THE DESIGN ASSUMPTIONS:

- BID-WELL 2450 FINISHING MACHINE WITH A MAXIMUM WEIGHT PER SIDE OF 4.90 KIPS DISTRIBUTED OVER 8'-6"
- A MAXIMUM SPACING OF OVERHANG FORMWORK BRACKETS OF 42 INCHES.
- ASSUMED RAIL LOCATION AT THE LIMITS OF DECK OVERHANG
- A MAXIMUM DISTANCE OF 55 INCHES FROM CENTERLINE OF EXTERIOR BEAM TO THE FACE OF THE SAFETY HANDRAIL.
- OVERHANG BRACKET BRACED A MAXIMUM OF 6" FROM THE BOTTOM FLANGE.

THE 8½-INCH-THICK CAST-IN-PLACE DECK SHALL HAVE A MINIMUM OF 3 INCH COVER. GRINDING THAT REDUCES THIS MINIMUM COVER TO MEET RIDEABILITY REQUIREMENTS IN STANDARD SPECIFICATIONS 601.11.4.3 AND 601.15.2 SHALL NOT BE PERMITTED WITHOUT A WRITTEN APPROVAL OF THE ENGINEER.

NO.	REVISION	DATE	BY

WEST VIRGINIA DEPARTMENT OF TRANSPORTATION
DIVISION OF HIGHWAYS
ENGINEERING DIVISION

I-64 OVER KANAWHA RIVER
EUGENE A. CARTER MEMORIAL BRIDGE +3

GENERAL NOTES
(1 OF 4)

DESIGNED	XXX
DATE	10/25
DRAWN	ARG
DATE	10/25
CHECKED	XXX
DATE	XX/XX
REVIEWED	
DATE	

HDR ENGINEERING INC.
CONSULTING ENGINEERS
CHARLESTON, WV
681-341-6100

SHEET $GN1$ OF
BRIDGE NO. 2563.6

SNOLEN $DD-MMM-YYYY HH:MM$ pw://pwhdruseas02.Intranet.hdr:HDR_US_East_02/Documents/WV_DOT/WVDOT-Eugene_Carter_Bridge_3/6.0_CAD_BIM/6.2_WIP/HDR/6.2.2_Sheet_Files/23_Structure/1.050 General Notes (1 of 4)

PROJECT NUMBERS		DISTRICT	COUNTY	SHEET NO.	TOTAL
STATE	FEDERAL				
S320-64-57.44 00	NHPP-0064 (497)D	1	KANAWHA	$TGN2$	

GENERAL NOTES (CONTINUED)

REINFORCING STEEL BARS

ALL REINFORCING STEEL BARS SHALL CONFORM TO SECTION 709.1 AND BE OF AASHTO M31, GRADE 60.

ALL BARS IN THE DECK SLAB, BARRIERS, CONCRETE END DIAPHRAGMS, APPROACH SLABS, PIERS, WINGWALLS, AND ABUTMENTS SHALL BE GALVANIZED.

GALVANIZED BARS SHALL BE HOT-DIP GALVANIZED IN ACCORDANCE WITH ASTM A767 OR ASTM A1094 AND CONFORM TO SECTIONS 602.6.3 AND 709.1.3.

ALL GALVANIZED REINFORCING STEEL SHALL BE INSPECTED BY A REPRESENTATIVE OF THE WVDOT MCS&T DIVISION, AT THE LOCATION OF GALVANIZING, PRIOR TO SHIPMENT.

IF ASTM A767 IS USED AS THE METHOD OF GALVANIZING, THE COATING SHALL BE CLASS 1, AND SHOP AND FIELD BENDING AFTER GALVANIZING SHALL BE PROHIBITED.

DAMAGED GALVANIZED COATING SHALL BE REPAIRED BY THE CONTRACTOR AT NO COST TO THE DIVISION AND INSPECTED BY THE WVDOT REPRESENTATIVE PRIOR TO CONCRETE PLACEMENT.

ALL REINFORCEMENT BARS SHALL BE LAPPED PER 602.7 OF THE STANDARD SPECIFICATIONS UNLESS SHOWN OTHERWISE IN THE PLANS. EMBEDMENT DIMENSIONS FOR REINFORCING ARE CLEAR DIMENSIONS UNLESS NOTED. BAR SPACINGS ARE GIVEN TO THE CENTERLINE OF BARS.

ALL MECHANICAL COUPLERS SHALL DEVELOP AT LEAST 125% OF THE SPECIFIED YIELD STRENGTH OF THE REINFORCING BAR, AND SHALL BE GALVANIZED. COST OF COUPLERS IS INCIDENTAL TO THE COST OF REINFORCING BARS.

THE CLEAR DISTANCE BETWEEN REINFORCING STEEL AND THE FACE OF CONCRETE SHALL BE AS FOLLOWS, UNLESS NOTED:

TOP OF DECK SLAB	3"
BOTTOM OF DECK SLAB	1" (1½" IN OVERHANGS, 3" FROM DRIP NOTCH TO EDGE)
BARRIERS	1½" TOP AND BACK FACE; 2" INSIDE FACE
ALL OTHER LOCATIONS	2"

BEARINGS AND APPURTENANCES

ALL NEW BEARINGS SHALL BE REINFORCED ELASTOMERIC BEARINGS. THE BEARINGS SHALL BE INSTALLED AT AN AMBIENT TEMPERATURE BETWEEN 40°F AND 80°F. BEARINGS AND COMPONENT PARTS SHALL MEET THE REQUIREMENTS OF THE AASHTO LRFD BRIDGE DESIGN SPECIFICATIONS.

STEEL BEARING COMPONENTS, INCLUDING SOLE PLATES, KEEPER ANGLES, ANCHOR BOLTS AND HARDWARE, SHALL BE GALVANIZED IN ACCORDANCE WITH AASHTO MIII OR AASHTO M232, AS APPLICABLE, AFTER FABRICATION. THESE ITEMS SHALL ALSO BE PAINTED TO MATCH STRUCTURAL STEEL AFTER GALVANIZING.

SEE SPECIAL PROVISIONS, HOWEVER ANCHOR BOLTS SHALL BE GRADE 105.

WHERE ANCHOR BOLT EMBEDMENT EXTENDS INTO EXISTING SUBSTRUCTURE CONCRETE, DRILL 3" DIAMETER HOLES INTO EXISTING CONCRETE. DRILLING THROUGH NEW CONCRETE IS NOT PERMITTED. FOR THE PORTION OF THE EMBEDMENT WITHIN NEW CONCRETE, THE CONTRACTOR HAS THE OPTION OF:

1. SETTING THE ANCHOR BOLTS WITH CONCRETE PLACEMENT. IN THIS CASE, THE PORTION EXTENDING INTO THE EXISTING CONCRETE SHALL BE FILLED WITH NON-SHRINK GROUT PRIOR TO PLACEMENT OF THE NEW CONCRETE.

2. SETTING ANCHOR BOLT SLEEVES WITH CONCRETE PLACEMENT. IN THIS CASE, THE ENTIRE EMBEDMENT LENGTH WITHIN EXISTING AND NEW CONCRETE SHALL BE FILLED WITH NON-SHRINK GROUT AFTER SETTING THE BOLTS.

NON-SHRINK GROUT SHALL CONFORM TO SECTION 715.5. THE COST OF ANY DRILLING, SLEEVES, AND GROUTING SHALL BE INCLUDED IN THE PRICE BID FOR THE BEARINGS. THE CONTRACTOR SHALL SUBMIT HIS PROPOSED METHOD AND MATERIAL TO THE ENGINEER FOR APPROVAL PRIOR TO CONSTRUCTION. FOR MORE INFORMATION, SEE THE BEARING DETAILS.

ANCHOR BOLTS, NUTS, WASHERS, AND STEEL BEARING COMPONENTS (INCLUDING SOLE PLATES, KEEPER ANGLES AND HARDWARE) SHALL BE GALVANIZED IN ACCORDANCE WITH AASHTO M111 OR AASHTO M232, AS APPLICABLE, AFTER FABRICATION. THESE ITEMS SHALL ALSO BE PAINTED AFTER GALVANIZING.

THE COST OF BEARINGS AND APPURTENANCES, INCLUDING ANCHOR BOLTS, HARDWARE, GALVANIZING AND PAINTING AND ANY REQUIRED DRILLING AND GROUTING OF ANCHOR BOLTS ARE INCLUDED IN ITEMS 615028-001, "GUIDED BEARING, ELASTOMERIC", 615029-001, AND "NON-GUIDED BEARING, ELASTOMERIC".

STRUCTURAL STEEL

ALL STRUCTURAL STEEL SHALL CONFORM TO THE REQUIREMENTS OF AASHTO M270, GRADE 50 UNLESS OTHERWISE NOTED.

THE FABRICATOR'S SHOP DRAWINGS SHALL IDENTIFY THE MATERIAL SPECIFICATION AND GRADE FOR EACH ITEM AND ARE SUBJECT TO APPROVAL OF THE ENGINEER.

ALL RETROFIT MATERIAL WHERE NOTED SHALL REQUIRE CHARPY V-NOTCH TESTING CONFORMING TO THE SUPPLEMENTAL IMPACT PROPERTIES FOR ZONE 2.

WELDED SHEAR STUD CONNECTORS MATERIAL AND INSTALLATION SHALL CONFORM TO SECTION 615.3.3.

WELDING

WELDING SHALL BE IN ACCORDANCE WITH SECTION 615 OF THE STANDARD SPECIFICATIONS. NO FIELD WELDING WILL BE PERMITTED UNLESS SHOWN ON THE PLANS OR APPROVED BY THE ENGINEER. DO NOT WELD REINFORCEMENT BARS DURING CONSTRUCTION OR FABRICATION.

ANY WELDING, FABRICATION AND NONDESTRUCTIVE TESTING SHALL CONFORM TO THE AASHTO/AWS BRIDGE WELDING CODE D1.5.

DO NOT WELD TO ANY STEEL MEMBERS UNLESS SHOWN IN THESE PLANS.

BOLTS

ALL FASTENERS SHALL BE $\frac{7}{8}$" DIAMETER HIGH STRENGTH BOLTS (IN ACCORDANCE WITH 709.24) UNLESS OTHERWISE NOTED. THE THREADED ENDS OF THE BOLTS ARE TO BE PLACED ON THE INSIDE WHERE PRACTICAL TO PROTECT THE THREADS FROM THE WEATHER.

HIGH STRENGTH FASTENERS SHALL BE TYPE 1 AND SHALL BE MECHANICALLY GALVANIZED IN ACCORDANCE WITH ASTM B695.

DIAMETER OF HOLES SHALL BE $\frac{1}{16}$" LARGER THAN THE NOMINAL DIAMETER OF THE FASTENER, UNLESS NOTED.

CONNECTIONS SHALL BE MADE TO EXCLUDE THREADS FROM THE SHEAR PLANE, UNLESS NOTED OTHERWISE.

PROVIDE A CLASS B SLIP COEFFICIENT FOR THE CONTACT AREA OF BOLTED PARTS, UNLESS NOTED.

ALL BOLT HOLES ARE TO BE SUBPUNCHED AND REAMED OR DRILLED TO SIZE.

EXCAVATION

PAYMENT FOR ALL EXCAVATION, WITHIN THE LIMITS SHOWN ON THE DRAWINGS (INCLUDING ANY EXCAVATION IN ROCK), SHALL BE AS STRUCTURE EXCAVATION, ITEM 212001-000.

ANY SHORING REQUIRED SHALL BE INCLUDED IN ITEM 212010-003. SHORING SHALL BE DESIGNED BY A PROFESSIONAL ENGINEER REGISTERED IN THE STATE OF WEST VIRGINIA.

BACKFILL

THE CONTRACTOR SHALL BACKFILL AROUND THE SUBSTRUCTURE AS SOON AS PRACTICAL AFTER REMOVAL OF FORMS AND FALSEWORK. SLOPE SURFACES TO DRAIN IN ACCORDANCE WITH SECTION 212.10. DEWATER EXCAVATION PRIOR TO BACKFILLING. DEWATERING IS INCIDENTAL TO ITEM 212001-000, "STRUCTURE EXCAVATION".

REINFORCED BACKFILL SHALL BE PLACED AT THE ABUTMENTS CONVERTED TO SEMI-INTEGRAL, AS DETAILED IN THE PLANS.

GROUND LINES, FINAL SLOPES AND SLOPE DRESSING SHALL BE AS DIRECTED BY THE ENGINEER.

SHOP DRAWINGS AND CONSTRUCTION ENGINEERING

ALL SHOP DRAWINGS WILL BE SUBJECT TO THE REQUIREMENTS OF SECTION 105.2. THE APPLICABLE SHOP DRAWINGS WILL BE SUBMITTED TO THE ENGINEER OF RECORD (EOR) BY THE DISTRICT RESPONSIBLE ENGINEER/REGIONAL CONSTRUCTION ENGINEER OR THEIR DESIGNEE, ELECTRONICALLY, BY E-MAIL FOR THEIR REVIEW/APPROVAL. SHOP DRAWINGS SHALL BE SENT TO THE FOLLOWING EOR CONTACT:

AHMED MONGI
ahmed.mongi@hdrinc.com
HDR ENGINEERING, INC
(681) 341-6100

AND

KODY OLIVER
kody.oliver@hdrinc.com
HDR ENGINEERING, INC
(681) 341-6100

THE DESIGN CALCULATIONS AND PLANS FOR ANY PROPOSED FALSEWORK, COFFERDAMS, SHEETING, OR OTHER TEMPORARY SUPPORTS OR BRACING REQUIRED TO CONSTRUCT THE STRUCTURE SHALL BE SIGNED AND SEALED BY A PROFESSIONAL ENGINEER REGISTERED IN THE STATE OF WEST VIRGINIA.

PRIOR TO IMPOSING ANY CONSTRUCTION LOADS ON THE STRUCTURE OR PORTIONS THEREOF, THE GENERAL CONTRACTOR SHALL SUBMIT PLANS AND SUPPORTING CALCULATIONS, SIGNED AND SEALED BY A PROFESSIONAL ENGINEER REGISTERED IN THE STATE OF WEST VIRGINIA, DEMONSTRATING THAT SUCH LOADINGS DO NOT INTRODUCE ANY DETRIMENTAL EFFECTS INTO THE STRUCTURE. THIS INCLUDES ERECTION PLANS AND CALCULATIONS.

THE FABRICATOR'S SHOP DRAWINGS SHALL IDENTIFY THE MATERIAL SPECIFICATION AND GRADE FOR EACH ITEM AND ARE SUBJECT TO THE APPROVAL OF THE ENGINEER.

DISMANTLING STRUCTURE

BEST MANAGEMENT PRACTICES SHALL BE USED IN STRUCTURAL REMOVAL. THE CONTRACTOR SHALL USE EXTREME CAUTION TO PREVENT DEBRIS FROM FALLING INTO AREAS BELOW THE BRIDGE. ANY AND ALL STEEL REINFORCEMENT, STRUCTURAL STEEL, AND ALL CONCRETE DEBRIS SHALL BE REMOVED FROM AREAS BELOW THE BRIDGE TO THE SATISFACTION OF THE ENGINEER. ANY STRUCTURAL STEEL REMOVED FROM THE EXISTING BRIDGE SHALL BECOME THE PROPERTY OF THE CONTRACTOR, AND SHALL BE REMOVED FROM THE PROJECT SITE. COST FOR REMOVAL TO BE INCLUDED IN ITEM 203001-000.

THE CONTRACTOR'S ATTENTION IS DIRECTED TO THE FACT THAT THE EXISTING BRIDGE COATING SYSTEM CONTAINS HIGH LEVELS OF TOXIC MATERIALS, PARTICULARLY LEAD AND CHROMIUM.

MAINTAINING TRAFFIC

TRAFFIC SHALL BE MAINTAINED IN ACCORDANCE WITH SECTIONS 636 AND 104.5, AND THE APPROVED TRAFFIC CONTROL PLAN.

DAMAGED SEEDED AREAS

ANY SEEDED AREAS THAT ARE DAMAGED DURING CONSTRUCTION MUST BE REPAIRED BY THE CONTRACTOR, AT THE CONTRACTOR'S EXPENSE. THE AREAS SHALL BE SEEDED AND MULCHED IN ACCORDANCE WITH SECTION 652.

NO.	REVISION	DATE	BY

WEST VIRGINIA DEPARTMENT OF TRANSPORTATION
DIVISION OF HIGHWAYS
ENGINEERING DIVISION

I-64 OVER KANAWHA RIVER
EUGENE A. CARTER MEMORIAL BRIDGE +3

GENERAL NOTES
(2 OF 4)

DESIGNED	DATE
XXX	10/25
DRAWN	
ARG	10/25
CHECKED	
XXX	XX/XX
REVIEWED	

HDR ENGINEERING INC.
CONSULTING ENGINEERS
CHARLESTON, WV
681-341-6100

SHEET $GN2$ OF

BRIDGE NO. 2563.6

SNOLEN $DD-MMM-YYYY HH:MM$ pw://pwhdruseas02.intranet-hdr:HDR_US_East_02/Documents/WV_DOT/WVDOT-Eugene_Carter_Bridge_3/6.0_CAD_BIM/6.2_WIP/HDR/6.2.2_Sheet_Files/23_Structure/1.051 General Notes (2 of 4)

PROJECT NUMBERS		DISTRICT	COUNTY	SHEET NO.	TOTAL
STATE	FEDERAL				
S320-64-57.44 00	NHPP-0064 (497)D	1	KANAWHA	$TGN3$	

GENERAL NOTES (CONTINUED)

UTILITIES

EXISTING UTILITIES SHOWN ON THE PLANS HAVE BEEN LOCATED BASED ON FIELD SURFACE EVIDENCE AND INFORMATION PROVIDED BY THE UTILITY. IT SHALL BE THE RESPONSIBILITY OF THE CONTRACTOR TO CALL WEST VIRGINIA 811 AT 811 OR 1-800-245-4848 AND TO ACCURATELY LOCATE ALL UTILITIES BY EXPLORATORY DIGGING IF NECESSARY.

WHEN WORKING NEAR EXISTING UNDERGROUND UTILITIES, EXTREME CAUTION SHOULD BE USED. ALL EXCAVATIONS NEAR THE UNDERGROUND UTILITIES SHALL BE SHORED TO PREVENT MOVEMENT. ANY DAMAGE TO THE UTILITIES WILL BE THE RESPONSIBILITY OF THE CONTRACTOR.

DATUM

ALL ELEVATIONS SHOWN IN THIS PLAN SET ARE BASED ON THE NORTH AMERICAN VERTICAL DATUM OF 1988, (NAVD 88).

SEE ROADWAY PLANS FOR HORIZONTAL AND VERTICAL CONTROL, GEOMETRIC LAYOUT, AND VERTICAL GEOMETRY/SUPERELEVATION INFORMATION.

ELEVATIONS SHOWN ON ORIGINAL DRAWINGS AND PREVIOUS REHABILITATION DRAWINGS DO NOT MATCH CURRENT DATUM.

ALL ELEVATIONS SHOWN IN THE ORIGINAL CONSTRUCTION PLANS FOR THE EXISTING STRUCTURE ARE BASED ON THE NATIONAL GEODETIC VERTICAL DATUM OF 1929. NGVD 29, REVISED 1961.

TO CONVERT NGVD 29 ELEVATION FROM THE ORIGINAL CONSTRUCTION PLANS TO A NAVD 88 ELEVATION, SUBTRACT 0.650 FEET.

COORDINATES SHOWN ON THESE PLANS ARE BASED ON WEST VIRGINIA STATE PLANE SOUTH ZONE PLANE COORDINATES 1983, NAD 83(2011).

CONCRETE PROTECTIVE COATING

THE EXPOSED CONCRETE SURFACES OF THE BRIDGE, EXCLUDING THE TOP OF THE ROADWAY SURFACE, SHALL RECEIVE CONCRETE PROTECTIVE COATING. THE COST ASSOCIATED WITH THIS WORK IS INCLUDED IN ITEM 601019-001, "CONCRETE PROTECTIVE COATING".

ALL SURFACES SHALL BE CURED A MINIMUM OF 28 DAYS PRIOR TO COATING APPLICATION. CONCRETE PROTECTIVE COATINGS MUST BE COMPATIBLE WITH ANY CURING COMPOUNDS THAT MAY BE USED DURING CONSTRUCTION.

EXPOSED SURFACES OF SUBSTRUCTURE UNITS, INCLUDING 6 INCHES BELOW FINISHED GROUND LINE AND BARRIERS (AS SHOWN IN THE DETAIL ON THE FOLLOWING SHEET) SHALL BE COATED WITH AN APPROVED CONCRETE PROTECTIVE COATING, IN ACCORDANCE WITH SECTION 601.13.3 OF THE STANDARD SPECIFICATIONS. THE FINISH COLOR OF THE CONCRETE SURFACES SHALL MEET SAE INTERNATIONAL AMS-STD-595 A, FEDERAL NUMBER 37925, INSIGNIA WHITE.

ALL SURFACES TO RECEIVE CONCRETE PROTECTIVE COATING SHALL BE THOROUGHLY CLEANED IN ACCORDANCE WITH SECTION 601.13 AND SECTION 685 OF THE STANDARD SPECIFICATIONS. CLEANING IS INCLUDED IN ITEM 685001-001, "BRIDGE CLEANING, CONCRETE PROTECTIVE COATING". MATERIAL GENERATED BY SURFACE PREPARATION OPERATIONS SHALL BE CONTAINED AND DISPOSED IN ACCORDANCE WITH SECTION 601.13 OF THE STANDARD SPECIFICATIONS. CONTAINMENT SHALL BE INCLUDED IN ITEM 688003-001, "CONTAINMENT AND DISPOSAL OF SPENT MATERIAL, CONCRETE PROTECTIVE COATING".

THE USE OF LINSEED OIL OR SILANE ON ANY CONCRETE WHERE CONCRETE PROTECTIVE COATINGS ARE APPLIED IS PROHIBITED.

BLAST CLEANING AND PAINTING

THE CONTRACTOR'S ATTENTION IS DIRECTED TO THE FACT THAT THE EXISTING BRIDGE COATING SYSTEM CONTAINS HIGH LEVELS OF TOXIC MATERIALS, PARTICULARLY LEAD AND CHROMIUM.

BEFORE BLAST CLEANING AND PAINTING OPERATIONS COMMENCE (INCLUDING THOSE FOR TOP FLANGES OF STEEL BEAMS), THE STRUCTURE SHALL BE THOROUGHLY CLEANED IN ACCORDANCE WITH SECTION 685 OF THE STANDARD SPECIFICATIONS. ALL WASH WATER SHALL BE FILTERED WITH 200 OPENINGS PER SQUARE INCH OR FINER MESH MATERIAL TO CATCH PARTICLES OF PAINT AND DEBRIS.

IN AREAS WHERE STEEL REPAIRS ARE REQUIRED, BLAST CLEANING AND PRIME COAT OF PAINTING SHALL BE PERFORMED PRIOR TO THE REQUIRED STRUCTURAL REPAIRS. ADDITIONAL COATS OF PAINT SHALL BE APPLIED FOLLOWING STEEL REPAIRS. THE COST OF ANY REQUIRED CLEANING BETWEEN PRIME COAT AND ADDITIONAL COATS SHALL BE INCLUDED IN THE BID PRICE FOR PAINTING.

ALL STRUCTURAL STEEL SHALL UNDERGO A "NEAR WHITE" BLAST CLEANING (SSPC-SP-10/NACE 2) IN ACCORDANCE WITH SUBSECTIONS 688.2.2.2.3, 688.2.2.3, 688.2.2.4, AND 688.3.2 OF THE STANDARD SPECIFICATIONS.

BLAST CLEANING AND PAINTING (CONTINUED)

PAINT COLOR SHALL BE SAE-AMS-STD-595 A, FEDERAL NUMBER 26373, GRAY, EXCEPT FOR TRUSS MAIN MEMBERS AND BRACING ABOVE DECK WHICH SHALL BE NUMBER XXXXX, XXXX.

AN APPROVED ORGANIC ZINC RICH PAINT SYSTEM IS TO BE USED FOR PAINTING ALL EXISTING STRUCTURAL STEEL. SYSTEM TO BE IN ACCORDANCE WITH THE FOLLOWING:

FULL PRIME COAT - THE ENTIRE STRUCTURE SHALL RECEIVE ONE COAT OF ORGANIC ZINC RICH PRIMER MEETING THE REQUIREMENTS OF SUBSECTION 711.6 OF THE STANDARD SPECIFICATIONS.

STRIPE PRIME COAT - ORGANIC ZINC RICH PRIMER MEETING THE REQUIREMENTS OF SUBSECTION 711.6 OF THE STANDARD SPECIFICATIONS.

INTERMEDIATE COAT - THE ENTIRE STRUCTURE SHALL RECEIVE ONE UNIFORM COAT OF AN EPOXY PAINT MEETING THE REQUIREMENTS OF SUBSECTION 711.22.3 OF THE STANDARD SPECIFICATIONS.

TOP COAT- THE ENTIRE STRUCTURE SHALL RECEIVE ONE UNIFORM COAT OF URETHANE PAINT MEETING THE REQUIREMENTS OF SUBSECTION 711.22.4 OF THE STANDARD SPECIFICATIONS.

EXISTING TOP FLANGES OF STRUCTURAL STEEL TO BE ENCASED IN A NEW CONCRETE BRIDGE DECK SHALL UNDERGO A "NEAR WHITE" BLAST CLEANING (SSPC-SP-10) AND BE PAINTED WITH THE SAME PRIMER AS THE REMAINDER OF THE STRUCTURAL STEEL, AS DESCRIBED ABOVE.

COVERS OF EXPANSION JOINTS AT OR ABOVE DECK SURFACE SHALL BE GALVANIZED IN ACCORDANCE WITH AASHTO M111.

THE CONTRACTOR SHALL CONFORM TO ALL REQUIREMENTS OF SUBSECTION 688.6 OF THE STANDARD SPECIFICATIONS. CONTAINMENT REQUIRED SHALL BE SSPC CLASS 1A (FOR ABRASIVE BLAST CLEANING).

CONTAINMENT CLASS AND METHODS OF ASSESSMENT SPECIFIED HEREIN SHALL MEET ALL APPLICABLE REQUIREMENTS OF SSPC-TG 6 AND SSPC-TU 7, CURRENT EDITIONS AT THE TIME OF AWARD OF CONTRACT.

CLEAN AND PAINT (PRIME) ALL STEEL COMPONENTS TO BE EMBEDDED IN SEMI-INTEGRAL ABUTMENT CONCRETE PLUS AN ADDITIONAL FOOT MINIMUM, BEFORE PLACEMENT OF CONCRETE. THE CREVICE BETWEEN EMBEDDED STEEL AND CONCRETE SHALL BE SUITABLY CHAMFERED TO PROVIDE FOR PLACEMENT OF A SEALANT. SEAL THE CREVICE WITH A SEALANT MATERIAL MEETING THE REQUIREMENTS OF ASTM C920, TYPE S, GRADE NS, CLASS 25, USES NT AND M. SEALANT SHALL BE SUITABLE FOR BONDING BETWEEN CONCRETE AND THE TOPCOAT OF THE SPECIFIED PAINT SYSTEM. ACID-CURE SEALANTS ARE NOT ALLOWED. INCLUDE PAYMENT IN ITEM 688001-001, CLEAN AND PAINT EXISTING STEEL BRIDGE.

SPECIAL PROVISIONS

THE FOLLOWING IS A LIST OF SPECIAL PROVISIONS THAT ARE APPLICABLE TO THIS BRIDGE. HOWEVER, IT IS NOT A COMPLETE LIST OF SPECIAL PROVISIONS. SEE THE PROPOSAL FOR A LIST OF ALL SPECIAL PROVISIONS.

SECTION 212 STRUCTURE, ROCK AND WET EXCAVATION (SHORING)
SECTION 601 STRUCTURAL CONCRETE (EPOXY BONDING COMPOUND)
SECTION 601 STRUCTURAL CONCRETE (EPOXY INJECTION CRACK REPAIR)
SECTION 601 STRUCTURAL CONCRETE (RAPID SET CEMENTITIOUS PATCHING)
SECTION 601 STRUCTURAL CONCRETE (ULTRA HIGH PERFORMANCE CONCRETE)
SECTION 601 STRUCTURAL CONCRETE (VERTICAL CLEARANCE GAUGE)
SECTION 615 STEEL STRUCTURES (ELASTOMERIC BEARING ASSEMBLIES)
SECTION 627 STRIP SEAL EXPANSION JOINT ASSEMBLY
SECTION 627 MODULAR EXPANSION JOINT SYSTEM
SECTION 645 REINFORCED SOIL SLOPES
SECTION 708 JOINT MATERIAL (NEOPRENE SHEET FOR SEMI-INTEGRAL ABUTMENTS)

JOINT FILLER

JOINT FILLER FOR VERTICAL JOINTS BETWEEN THE APPROACH SLAB AND THE ABUTMENT AND BETWEEN THE ABUTMENT STEM AND WINGWALLS SHALL BE PREFORMED EXPANSION JOINT FILLER CONFORMING TO SECTION 708.1.2 THE COST OF THE FILLER IS INCIDENTAL TO THE APPROACH SLAB AND ABUTMENT CONCRETE BID ITEMS.

ABBREVIATIONS

AASHTO - AMERICAN ASSOCIATION OF STATE HIGHWAY AND TRANSPORTATION OFFICIALS
ABUT - ABUTMENT
APPROX - APPROXIMATE
BEJS - BRIDGE EXPANSION JOINT SYSTEM
BF - BACK FACE
BOF - BOTTOM OF FOOTING
BOS - BOTTOM OF SLAB
BOT - BOTTOM
BRG - BEARING
BTWN - BETWEEN
CJ - CONSTRUCTION JOINT
CLR - CLEAR
CTR - CENTER
C. TO C. - CENTER TO CENTER
CY - CUBIC YARD
DIA - DIAMETER
E - EPOXY OR EXPANSION
EA - EACH
EB - EASTBOUND
EF - EACH FACE
EJ - EXPANSION JOINT
EL OR ELEV - ELEVATION
EOW - EDGE OF WATER
EQ - EQUAL
ES - EACH SIDE
EXP - EXPANSION
EX OR EXIST - EXISTING
F - FIXED
FF - FRONT FACE
FRP - FIBERGLASS REINFORCED PLASTIC
FS - FIELD SPLICE
FTG - FOOTING
GA - GAUGE
GDR - GIRDER
HS - HIGH STRENGTH
ID - INSIDE DIAMETER
INT - INTEGRAL
LB - POUND
LF - LINEAR FOOT
LRFD - LOAD AND RESISTANCE FACTOR DESIGN
LS - LUMP SUM
MAX - MAXIMUM
MIN - MINIMUM
NB - NORTHBOUND
NTS - NOT TO SCALE
OD - OUTSIDE DIAMETER
OHW - ORDINARY HIGH WATER
PERP - PERPENDICULAR
PROP - PROPOSED
PSI - POUNDS PER SQUARE INCH
PSF - POUNDS PER SQUARE FOOT
PVC - POLY VINYL CHLORIDE
R - RADIUS
REQ'D - REQUIRED
RT - ROUTE
SB - SOUTHBOUND
SER - SERIES
SEMI-INT - SEMI INTEGRAL
SF - SQUARE FOOT
SIP - STAY IN PLACE
SP OR SPA - SPACES
SQ - SQUARE
STA - STATION
STR - STRAIGHT OR STRINGER
SY - SQUARE YARDS
T & B - TOP AND BOTTOM
TOS - TOP OF SLAB
TYP - TYPICAL
UN OR UNO - UNLESS NOTED OTHERWISE
VC - VERTICAL CURVE
WB - WESTBOUND
WI - WROUGHT IRON
WP - WORK POINT

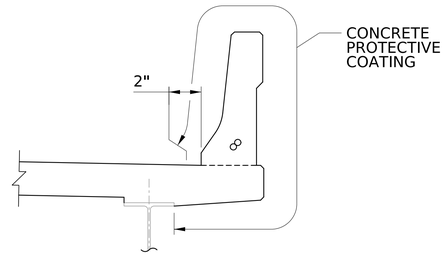

LIMITS OF BARRIER COATING

TYPE F BARRIER

NO.	REVISION	DATE	BY

WEST VIRGINIA DEPARTMENT OF TRANSPORTATION
DIVISION OF HIGHWAYS
ENGINEERING DIVISION

I-64 OVER KANAWHA RIVER
EUGENE A. CARTER MEMORIAL BRIDGE +3

GENERAL NOTES
(3 OF 4)

DESIGNED	DATE
XXX	10/25
DRAWN	
ARG	10/25
CHECKED	
XXX	XX/XX
REVIEWED	

HDR ENGINEERING INC.
CONSULTING ENGINEERS
CHARLESTON, WV
681-341-6100

SHEET $GN3$ OF

BRIDGE NO. 2563.6

pw://pwhdruseas02.intranet.hdr:HDR_US_East_02/Documents/WV_DOT/WVDOT-Eugene_Carter_Bridge_3/6.0_CAD_BIM/6.2_WIP/HDR/6.2.2_Sheet_Files/23_Structure/1.052 General Notes (3 of 4).dgn
$DD-MMM-YYYY HH:MM$
SNOLEN

PROJECT NUMBERS		DISTRICT	COUNTY	SHEET NO.	TOTAL
STATE	FEDERAL				
S320-64-57.44 00	NHPP-0064 (497)D	1	KANAWHA	$TGN4$	

GENERAL NOTES (CONTINUED)

DAMAGE

THE CONTRACTOR SHALL EXERCISE EXTREME CAUTION TO ENSURE THAT NO DAMAGE IS INFLICTED TO THE REMAINING COMPONENTS OF THE STRUCTURE. ANY DAMAGES THAT MAY OCCUR SHALL BE REPAIRED TO THE SATISFACTION OF THE ENGINEER AT NO ADDITIONAL COST TO THE DIVISION.

WASTE MATERIAL

ALL MATERIAL REMOVED AND NOT REUSED IN THE CONSTRUCTION OF THIS PROJECT WILL BE REMOVED FROM THE PROJECT AND DISPOSED OF BY THE CONTRACTOR AT NO ADDITIONAL COST TO THE DIVISION.

ABRASIVES

ALL ABRASIVES SHALL BE IN ACCORDANCE WITH THE APPLICABLE REQUIREMENTS OF STANDARD SPECIFICATIONS SECTION 688.

PROJECT SITE CLEANLINESS

AFTER CLEANING AND PAINTING OPERATIONS AND PRIOR TO PROJECT ACCEPTANCE, ANY FUGITIVE MATERIAL AND DEBRIS ASSOCIATED WITH PERFORMANCE OF THE CONTRACT SHALL BE REMOVED AND PROPERLY CONTAINED IN ACCORDANCE WITH THE REQUIREMENTS OF STANDARD SPECIFICATIONS SECTION 688. THE PROJECT SITE SHALL BE IN A NEAT AND CLEAN CONDITION MEETING THE APPROVAL OF THE ENGINEER.

PAINT DESIGNATION LABEL

THE BRIDGE PAINT DESIGNATION LABEL SHALL BE IN ACCORDANCE WITH STANDARD SPECIFICATION SECTION 688.3.7.

WELD INSPECTION FOLLOWING DECK REMOVAL

AFTER REMOVAL OF THE DECK, THE TENSION AND STRESS REVERSAL AREAS OF THE BEAM TOP FLANGES SHALL BE INSPECTED FOR THE PRESENCE OF UNAUTHORIZED WELDS WHICH MAY HAVE BEEN PLACED DURING THE CONSTRUCTION OF THE ORIGINAL DECK, OR DURING SUBSEQUENT MAINTENANCE OPERATIONS. ANY SUCH WELDS DISCOVERED SHALL BE REMOVED BY THERMAL CUTTING THE WELDS TO WITHIN ¼ IN OF THE FLANGE SURFACE FOLLOWED BY GRINDING THE REMAINING WELD FLUSH WITH THE BEAM FLANGE, OR AS MAY BE OTHERWISE DIRECTED BY THE ENGINEER. AFTER GRINDING, THE GROUND AREA OF THE BEAM FLANGE SHALL BE INSPECTED BY THE CONTRACTOR USING MAGNETIC PARTICLE (MT) TESTING TO ASSURE THE ABSENCE OF ANY CRACKS. MAGNETIC PARTICLE TESTING SHALL BE PERFORMED IN ACCORDANCE WITH THE CURRENTLY ADOPTED ANSI/AASHTO/AWS BRIDGE WELDING CODE D1.5 (BWC). PERSONNEL PERFORMING THE MT SHALL ALSO BE QUALIFIED IN ACCORDANCE WITH THE BWC.

ALL GRINDING AND MT SHALL BE WITNESSED BY INDIVIDUALS QUALIFIED AS A CERTIFIED WELDING INSPECTOR (CWI) IN ACCORDANCE WITH THE AMERICAN WELDING SOCIETY STANDARD FOR QUALIFICATION AND CERTIFICATION OF WELDING INSPECTORS QC-1. THE CONTRACTOR SHALL NOTIFY THE ENGINEER AT LEAST 48 HOURS PRIOR TO THE START OF ANY GRINDING OR NONDESTRUCTIVE TESTING. ALL WORK AND COSTS ASSOCIATED WITH REMOVAL OF THE THE UNAUTHORIZED WELDS, INCLUDING MT, AND WITNESSING THE WORK BY THE CWI, SHALL BE PAID TO THE CONTRACTOR AS FORCE ACCOUNT WORK IN ACCORDANCE WITH SECTION 109.4 OF THE STANDARD SPECIFICATIONS. APPROPRIATE TIME EXTENSIONS WILL BE GIVEN DUE CONSIDERATION BY THE ENGINEER.

PROTECTIVE SHIELDING

PROTECTIVE SHIELDING IS TO BE PROVIDED, AS NECESSARY, TO PROTECT THE AREA BELOW THE BRIDGE INCLUDING ROADWAYS AND THE KANAWHA RIVER FROM DEBRIS DURING DEMOLITION AND CONSTRUCTION FOR THE DURATION OF THE PROJECT.

DESIGN CALCULATIONS, DETAILS AND INSTALLATION PROCEDURES FOR THE PROTECTIVE SHIELDING SHALL BE PREPARED AND SEALED BY A PROFESSIONAL ENGINEER REGISTERED IN THE STATE OF WEST VIRGINIA AND SHALL BE SUBMITTED TO THE ENGINEER, FOR INFORMATION, PRIOR TO INSTALLATION. THE COST FOR PROTECTIVE SHIELDING IS TO BE INCLUDED IN THE BID PRICE ITEM 203001-000, DISMANTLING STRUCTURE. RESPONSIBILITY FOR THE INSTALLATION OF ADEQUATE SHIELDING SHALL REST WITH THE CONTRACTOR.

FOR ADDITIONAL REQUIREMENTS, SEE TRAFFIC CONTROL SHEETS.

DOWNSPOUTHING

MATERIAL FOR DOWNSPOUTING SHALL BE FRP. THE FRP SHALL BE PIGMENTED SO THAT THE COLOR SHALL BE CLOSELY MATCHED TO THE COLOR OF THE STRUCTURAL STEEL TOP COAT, AND SHALL BE APPROVED BY THE DOH.

VERTICAL CLEARANCE GAUGE

A NEW VERTICAL CLEARANCE SHALL BE PROVIDED ON THE MAIN RIVER PIERS AS SHOWN IN THE PLANS AND IN ACCORDANCE WITH THE SPECIAL PROVISIONS. COST IS INCLUDED IN ITEM 601055-001.

NAVIGATION LIGHTING SYSTEM

THE NAVIGATION LIGHTING SYSTEM SHALL BE COMPLETELY OPERATIONAL AT ALL TIMES. ANY COSTS INCURRED SHALL BE INCIDENTAL TO ITEM 203001-000, DISMANTLING STRUCTURE.

NEW BRIDGE PLATE

INSTALL A NEW BRIDGE PLATE ACCORDING TO SECTION 104.8 OF THE SPECIFICATIONS AT A LOCATION DESIGNATED BY THE ENGINEER.

RAILROAD COORDINATION

THE CONTRACTOR SHALL ADHERE TO CSXT INSURANCE REQUIREMENTS, CSXT SPECIAL PROVISIONS, AND CSXT CONSTRUCTION SUBMISSION CRITERIA.

THE CONTRACTOR SHALL ENSURE THAT ALL FALSEWORK, BRACING, FORMS AND UNDERDECK SHIELDING HAVE A MINIMUM VERTICAL CLEARANCE OF 23'-0" ABOVE THE TOP OF THE HIGHEST RAIL TO THE LOWEST POINT OF STRUCTURE IN THE HORIZONTAL CLEARANCE AREA WHICH EXTENDS 6'-0" EITHER SIDE OF THE CENTERLINE OF TRACK. ALSO, THE EXISTING HORIZONTAL CLEARANCES MEASURED PERPENDICULAR TO THE CENTERLINE OF THE NEAREST TRACK SHALL BE MAINTAINED, AS SHOWN IN THE DETAIL BELOW.

THE CONTRACTOR SHALL SUBMIT A DETAILED PROCEDURE AND SCHEDULE FOR PERFORMING THE WORK REQUIRED BY THE PLANS THAT FALLS IN THE VICINITY OF THE TRACKS (THIS IS SPECIFICALLY WORK IN MAINLINE SPAN 3 EB AND WB, RAMP C SPAN C6 AND RAMP D SPAN D2). THE PROCEDURE SHALL INDICATE THE CAPACITY OF, LOCATION WITH RESPECT TO THE TRACKS OF, ESTIMATED LOADS ON, AND CONFIRMATION THAT ANY REQUIRED LIFTING DEVICES / JACKS ARE ADEQUATE FOR 150% OF THE LOAD TO BE LIFTED. THE PROCEDURE MUST BE APPROVED BY CSXT. THE SCHEDULE OF WORK IS TO BE COORDINATED WITH CSX BY THE CONTRACTOR IN ADVANCE OF CONSTRUCTION.

IT IS ANTICIPATED THAT REPAIR EFFORTS WILL REQUIRE ACCESS TO CSXT ROW. THE CONTRACTOR SHALL SUBMIT A DETAILED DESCRIPTION OF THE MEANS AND METHODS FOR ACCESS, IN ADDITION TO PHASES AND TIMEFRAMES FOR DEMOLITION AND REPAIRS. THE SUBMISSION MUST BE REVIEWED AND APPROVED BY CSXT PRIOR TO PERFORMING REPAIRS.

ALL DEBRIS ASSOCIATED WITH REPAIR EFFORTS ARE TO BE COLLECTED FROM AND DISPOSED OFF OF CSXT PROPERTY. PLEASE NOTE THAT NO DRAINAGE IS PERMITTED TO DISCHARGE ONTO CSXT RIGHT-OF-WAY DURING CONSTRUCTION OR AS A FINAL CONDITION. ANY ADDITIONAL CONSTRUCTION DRAINAGE SHALL BE DIRECTED AWAY FROM CSXT PROPERTY.

THE CONTRACTOR MUST PLAN AND PERFORM THE WORK IN A MANNER SUCH THAT THE CSXT TRACKS AT THE PROJECT LOCATION REMAIN FULLY CAPABLE OF CARRYING RAIL TRAFFIC THROUGHOUT THE WORK PERIOD AND RAIL TRAFFIC IS NOT DELAYED OR OTHERWISE IMPACTED DUE TO THE WORK BEING PERFORMED.

THE CONTRACTOR SHALL NOT USE THE CSXT RIGHT-OF-WAY FOR STORAGE OF MATERIALS OR EQUIPMENT DURING CONSTRUCTION. THE CSXT RIGHT-OF-WAY MUST REMAIN CLEAR AT ALL TIMES. THE CONTRACTOR SHALL BE REQUIRED TO FULLY COMPLY WITH ALL FEDERAL, STATE, AND LOCAL ENVIRONMENTAL LAWS, REGULATIONS, STATUTES AND ORDINANCES AT ALL TIMES.

IT IS THE CONTRACTOR'S RESPONSIBILITY TO PROVIDE PROTECTION SHIELDS, CONSTRUCTION FENCING AT 15 FT FROM CENTERLINE OF TRACKS, AND BALLAST PROTECTION SYSTEMS IN ACCORDANCE WITH CSX'S OVERHEAD BRIDGE CRITERIA AND CSXT CONSTRUCTION SUBMISSION CRITERIA.

ALL DESIGN WORK IS TO BE DONE IN ACCORDANCE WITH THE CSXT OVERHEAD BRIDGE CRITERIA AND CSXT SOIL WATER MANAGEMENT POLICY.

RAILROAD FLAGGING

THE DIVISION OF HIGHWAYS, IN CONJUNCTION WITH THIS RAILROAD, HAS ESTIMATED THE NUMBER OF FLAGGING HOURS FOR THE CONSTRUCTION OF THE SUBJECT PROJECT TO BE 500. THE DIVISION OF HIGHWAYS WILL DIRECTLY REIMBURSE THE RAILROAD FOR THE CONTRACTOR'S USE OF THESE HOURS. ADDITIONAL HOURS FOR THE CONTRACTOR'S USE CAN BE ADDED IF THE HOURS CAN BE JUSTIFIED. HOURS USED SOLELY FOR THE BENEFIT OF THE CONTRACTOR WILL BE DEDUCTED FROM THE PAY ESTIMATE. MORE DETAIL CONCERNING RAILROAD FLAGGING IS FOUND IN SECTION 107.8 OF THE STANDARD SPECIFICATIONS.

REQUIRED RAILROAD CLEARANCES AT CSX

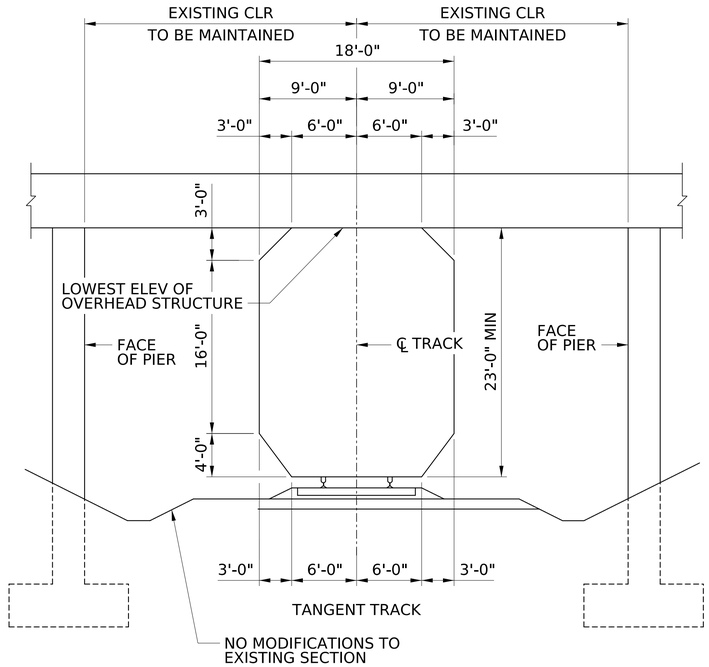

NO.	REVISION	DATE	BY

WEST VIRGINIA DEPARTMENT OF TRANSPORTATION
DIVISION OF HIGHWAYS
ENGINEERING DIVISION

I-64 OVER KANAWHA RIVER
EUGENE A. CARTER MEMORIAL BRIDGE +3

GENERAL NOTES
(4 OF 4)

DESIGNED	DATE
XXX	10/25
DRAWN	
ARG	10/25
CHECKED	
XXX	XX/XX
REVIEWED	

HDR ENGINEERING INC.
CONSULTING ENGINEERS
CHARLESTON, WV
681-341-6100

SHEET $GN4$ OF

BRIDGE NO. 2563.6

SNOLEN $DD-MMM-YYYY HH:MM$ pw://pwhdruseas02.intranet.hdr:HDR_US_East_02/Documents/WV_DOT/WVDOT-Eugene_Carter_Bridge_3/6.0_CAD_BIM/6.2_WIP/HDR/6.2.2_Sheet_Files/23_Structure/1.053 General Notes (4 of 4)

PROJECT NUMBERS		DISTRICT	COUNTY	SHEET NO.	TOTAL
STATE	FEDERAL				
S320-64-57.44 00	NHPP-0064 (497)D	1	KANAWHA		

ITEM DESCRIPTION				SUPERSTRUCTURE															
				ML WESTBOUND						ML EASTBOUND						RAMP D		RAMP E	RAMP F
ITEM NO.	DESCRIPTION	UNIT	QNTY. NOTE	SPANS 1 & 2	SPANS 3 & 4	SPANS 5, 6 & CA	SPAN 7	SPANS 8 & 9	SPANS 10, 11, DE & EE	SPANS 1 & 2	SPANS 3 & 4	SPANS 5, 6 & DA	SPAN 7	SPANS 8 & 9	SPANS 10 & 11, DF & EF	SPAN D1	SPANS D2 & D3	SPANS E1 THRU E3	SPANS F1 THRU F3
203001-000	DISMANTLING STRUCTURE (2563.5)	$ *	1	220,000	220,000	300,000	435,000	225,000	290,000	230,000	200,000	305,000	435,000	225,000	290,000	30,000	85,000	85,000	85,000
212001-000	STRUCTURE EXCAVATION	CY																	
212010-003	SHORING	$ *	2																
307001-000	AGGREGATE BASE COURSE, CLASS 1	CY	3																
502001-012	12 UNCH PORTLAND CEMEMNT CONCRETE APPROACH SLAB	SY	4																
601002-001	CLASS B CONCRETE	CY	5																
601003-001	CLASS K CONCRETE	CY	6	65	65	105	115	60	100	65	55	100	115	60	95	20	55	55	55
601009-001	CLASS H CONCRETE	CY	7	395	395	540	800	430	560	420	360	560	800	430	560	55	160	160	160
601013-001	EPOXY RESIN PROTECTIVE COATING, REPAIR TYPE C4	SF *	8																
601019-001	CONCRETE PROTECTIVE COATING, REPAIR TYPE C3	SF	9	6,100	6,100	8,500	11,000	6,000	9,100	6,500	5,500	8,400	11,000	6,000	10,700	1,800	5,300	3,400	3,400
601030-000	PATCHING CONCRETE STRUCTURES, REPAIR TYPE C1B	SF	10																
601030-000	PATCHING CONCRETE STRUCTURES, REPAIR TYPE C1C	SF	10																
601031-001	EPOXY INJECTION CRACK REPAIR, REPAIR TYPE C2	LF	10																
601037-001	DOWEL HOLE, VARIABLE	EA	11																
601055-001	VERTICAL CLEARANCE GAUGE, PIER B AND PIER C	LS	12																
602002-003	GALVANIZED REINFORCING STEEL	LB	13	115,000	115,000	161,300	228,800	122,500	165,000	121,300	103,800	165,000	228,800	122,500	163,800	18,800	53,800	53,800	53,800
615010-003	TEMPORARY FALSEWORK	$ *	14																
615028-001	GUIDED BEARING, ELASTOMERIC	EA																	
615039-001	JACKING STEEL SUPERSTRUCTURE	$ *																	
615075-001	MISCELLANEOUS BRIDGE WORK, REPLACE BRIDGE DRAINAGE SYSTEM IN ITS ENTIRETY, REPAIR R1	LS	15																
615075-001	MISCELLANEOUS BRIDGE WORK, DEBRIS REMOVAL, REPAIR C7	LS	16																
615075-001	MISCELLANEOUS BRIDGE WORK, REPAIR WINGWALL UNDERMINING AT ABUTMENT AW, REPAIR C8	LS																	
615075-001	MISCELLANEOUS BRIDGE WORK, INSTALL NEW SIGN SUPPORTS ON TRUSS, REPAIR M1	LS																	
615075-001	MISCELLANEOUS BRIDGE WORK, INSTALL NEW OVERHEAD SIGN SUPPORTS ON APPROACHES, REPAIR M2	LS																	
615075-002	MISCELLANEOUS BRIDGE WORK, CLEAN AND LUBRICATE EXISTING BEARING, REPAIR B4	EA																	
615075-002	MISCELLANEOUS BRIDGE WORK, REPAIR BEARING TO REMAIN, REPAIR B5	EA																	
615075-002	MISCELLANEOUS BRIDGE WORK, REMOVE PREVIOUS BEARING REPAIR/SHORING, REPAIR B6	EA																	
615075-002	MISCELLANEOUS BRIDGE WORK, REPAIR STEEL GIRDER LOCAL DETERIORATION, REPAIR S1	EA							1										
615075-002	MISCELLANEOUS BRIDGE WORK, REPAIR STEEL FLOORBEAM LOCAL DETERIORATION, REPAIR S3	EA					2						6						
615075-002	MISCELLANEOUS BRIDGE WORK, REPAIR LATERAL BRACING LOCAL DETERIORATION, REPAIR S4	EA			1	1	2				2	2	3						

NO.	REVISION	DATE	BY

WEST VIRGINIA DEPARTMENT OF TRANSPORTATION
DIVISION OF HIGHWAYS
ENGINEERING DIVISION

I-64 OVER KANAWHA RIVER
EUGENE A. CARTER MEMORIAL BRIDGE +3

SUMMARY OF QUANTITIES
(1 OF 7)

DESIGNED	DATE
DRAWN	
CHECKED	
REVIEWED	

HDR ENGINEERING INC.
CONSULTING ENGINEERS
CHARLESTON, WV
681-341-6100

SHEET OF
BRIDGE NO. 2563.6

pw://pwhdruseas02.intranet.hdr:HDR_US_East_02/Documents/WV_DOT/WVDOT-Eugene_Carter_Bridge_3/6.0_CAD_BIM/6.2_WIP/HDR/6.2.2_Sheet_Files/23_Structure/Reference/str_ref_bdr_Eugene Carter Memorial.dgn
$DD-MMM-YYYY HH:MM$
SNOLEN

PROJECT NUMBERS		DISTRICT	COUNTY	SHEET NO.	TOTAL
STATE	FEDERAL				
S320-64-57.44 00	NHPP-0064 (497)D	1	KANAWHA		

ITEM DESCRIPTION				SUPERSTRUCTURE														
				ML WESTBOUND						ML EASTBOUND						RAMP D		RAMP E	RAMP F
ITEM NO.	DESCRIPTION	UNIT	QNTY. NOTE	SPANS 1 & 2	SPANS 3 & 4	SPANS 5, 6 & CA	SPAN 7	SPANS 8 & 9	SPANS 10, 11, DE & EE	SPANS 1 & 2	SPANS 3 & 4	SPANS 5, 6 & DA	SPAN 7	SPANS 8 & 9	SPANS 10 & 11, DF & EF	SPAN D1	SPANS D2 & D3	SPANS E1 THRU E3	SPANS F1 THRU F3
615075-002	MISCELLANEOUS BRIDGE WORK, REPAIR EXISTING OR INSTALL NEW STEEL DIAPHRAGM / CROSSFRAME, REPAIR S5	EA				2						1						12	12
615075-002	MISCELLANEOUS BRIDGE WORK, REPAIR OR STRENGTHEN STIFFENER / CONNECTION PLATE, REPAIR S6	EA									1							8	8
615075-002	MISCELLANEOUS BRIDGE WORK, REPAIR FIELD SPLICE, REPAIR S7	EA			2	1		1	1		2			3	1				
615075-002	MISCELLANEOUS BRIDGE WORK, INSTALL STUD SHEAR CONNECTORS, REPAIR S8	EA	17	5,600	5,600	8,500	12,600	6,500	7,500	6,000	4,800	8,400	12,600	6,500	7,200	900	2,700	2,700	2,700
615075-002	MISCELLANEOUS BRIDGE WORK, TRUSS MEMBER REPAIR, REPAIR S12	EA											2						
615075-002	MISCELLANEOUS BRIDGE WORK, TRUSS GUSSET REPAIR, REPAIR S13	EA											1						
615075-002	MISCELLANEOUS BRIDGE WORK, TRUSS MISCELLANEOUS REPAIR, REPAIR S14	EA					12						12						
615075-002	MISCELLANEOUS BRIDGE WORK, FATIGUE RETROFIT - CRACK ARREST REPAIR, REPAIR S15	EA			5		1				1	4							
615075-002	MISCELLANEOUS BRIDGE WORK, FATIGUE RETROFIT - OTHER, REPAIR S16	EA																16	
615075-002	MISCELLANEOUS BRIDGE WORK, REPLACE BOLT, REPAIR S17	EA						3	1					4					
615075-002	MISCELLANEOUS BRIDGE WORK, REMOVE TACK WELD, REPAIR S18	EA					8	1					21						
615075-002	MISCELLANEOUS BRIDGE WORK, CROSS GIRDER REPAIR, REPAIR S20	EA										1							2
615075-002	MISCELLANEOUS BRIDGE WORK, MISCELLANEOUS STEEL REPAIR, REPAIR S21	EA					2						5						
615075-002	MISCELLANEOUS BRIDGE WORK, REMOVE LATERAL BRACING MEMBER, REPAIR S23	EA		30	30	53				40	20	53							
615075-002	MISCELLANEOUS BRIDGE WORK, PACK RUST REMOVAL, REPAIR P2	EA																1	1
627011-002	REMOVE AND REPLACE EXPANSION DEVICE, MODULAR JOINT	LF																	
627011-002	REMOVE AND REPLACE EXPANSION DEVICE, STRIP SEAL	LF																	
627025-001	STRIP SEAL EXPANSION JOINT SYSTEM BEHIND THE APPROACH SLAB	LF																	
639001-001	CONSTRUCTION LAYOUT STAKE	LS																	
645001-001	PRIMARY REINFORCEMENT, 2,400 LBS/FT	SY	18																
662003-001	POLYVINYLCHLORIDE CONDUIT, 2 INCH DIAMETER, SCHEDULE 40	LS	19	1,040	880	1,660	1,860	980	1,900	1,060	1,060	1,780	1,860	980	1,900	300	880	840	850
662006-001	JUNCTION BOX, TYPE A	EA	20	6	6	6	8	6	6	6	6	6	8	6	6	4	6	4	4
662006-001	JUNCTION BOX, TYPE B	EA	21				4						4						
685001-001	BRIDGE CLEANING, CONCRETE PROTECTIVE COATING	SF *	22	6,100	6,100	8,500	11,000	6,000	9,100	6,500	5,500	8,400	11,000	6,000	10,700	1,800	5,300	3,400	3,400
685001-001	BRIDGE CLEANING, PAINTING STEEL BRIDGE, SPOT	SF *	23	4,590	4,590	8,250	22,500	6,150	6,750	4,860	4,140	9,000	22,500	6,150	6,750	1,200	3,300	1,800	1,800
688001-001	CLEAN AND PAINT EXISTING STEEL BRIDGE, SPOT	SF *	23	4,590	4,590	8,250	22,500	6,150	6,750	4,860	4,140	9,000	22,500	6,150	6,750	1,200	3,300	1,800	1,800
688003-001	CONTAINMENT AND DISPOSAL OF SPENT MATERIAL, CONCRETE PROTECTIVE COATING	SF *		6,100	6,100	8,500	11,000	6,000	9,100	6,500	5,500	8,400	11,000	6,000	10,700	1,800	5,300	3,400	3,400
688003-001	CONTAINMENT AND DISPOSAL OF SPENT MATERIAL, PAINTING STEEL BRIDGE, SPOT	SF *	23	4,590	4,590	8,250	22,500	6,150	6,750	4,860	4,140	9,000	22,500	6,150	6,750	1,200	3,300	1,800	1,800

NO.	REVISION	DATE	BY

WEST VIRGINIA DEPARTMENT OF TRANSPORTATION
DIVISION OF HIGHWAYS
ENGINEERING DIVISION

I-64 OVER KANAWHA RIVER
EUGENE A. CARTER MEMORIAL BRIDGE +3

SUMMARY OF QUANTITIES
(2 OF 7)

DESIGNED	DATE
DRAWN	
CHECKED	
REVIEWED	

HDR ENGINEERING INC.
CONSULTING ENGINEERS
CHARLESTON, WV
681-341-6100

SHEET OF
BRIDGE NO. 2563.6

pw://pwhdruseas02.intranet.hdr:HDR_US_East_02/Documents/WV_DOT/WVDOT-Eugene_Carter_Bridge_3/6.0_CAD_BIM/6.2_WIP/HDR/6.2.2_Sheet_Files/23_Structure/Reference/str_ref_bdr_Eugene Carter Memorial.dgn
$DD-MMM-YYYY HH:MM$
SNOLEN

PROJECT NUMBERS		DISTRICT	COUNTY	SHEET NO.	TOTAL
STATE	FEDERAL				
S320-64-57.44 00	NHPP-0064 (497)D	1	KANAWHA		

ITEM DESCRIPTION				SUBSTRUCTURE										SUBSTRUCTURE				
				MAINLINE										MAINLINE				
ITEM NO.	DESCRIPTION	UNIT	QNTY. NOTE	ABUT. AW	ABUT. AE	PIER A1	PIER A2	PIER A3	PIER A4	PIER A5	PIER A6	PIER A7	PIER A8	PIER D3	PIER A	PIER B	PIER C	PIER D	PIER E
203001-000	DISMANTLING STRUCTURE (2563.5)	$ *	1	25,000														
212001-000	STRUCTURE EXCAVATION	CY		50	50													
212010-003	SHORING	$ *	2	25,000														
307001-000	AGGREGATE BASE COURSE, CLASS 1	CY	3															
502001-012	12 UNCH PORTLAND CEMEMNT CONCRETE APPROACH SLAB	SY	4	140	140													
601002-001	CLASS B CONCRETE	CY	5	15	4			8	8			8	8	8		4	4		10
601003-001	CLASS K CONCRETE	CY	6	10	10														
601009-001	CLASS H CONCRETE	CY	7																
601013-001	EPOXY RESIN PROTECTIVE COATING, REPAIR TYPE C4	SF *	8	300	300			300	300			300	300	150		1,000	1,000		1,000
601019-001	CONCRETE PROTECTIVE COATING, REPAIR TYPE C3	SF	9	6,000	6,000	1,100	1,250	2,700	3,100	4,250	4,500	6,000	5,700	2,000	16,000	30,000	30,000	12,500	14,000
601030-000	PATCHING CONCRETE STRUCTURES, REPAIR TYPE C1B	SF	10	17	101	2		3		1		3	16	24		435	72	2	12
601030-000	PATCHING CONCRETE STRUCTURES, REPAIR TYPE C1C	SF	10	17	101	2		3		1		3	16	24		435	72	2	12
601031-001	EPOXY INJECTION CRACK REPAIR, REPAIR TYPE C2	LF	10	10	16							21	2	3	41	522	49		
601037-001	DOWEL HOLE, VARIABLE	EA	11	200	200			80	80			80	80	80		80	80		160
601055-001	VERTICAL CLEARANCE GAUGE, PIER B AND PIER C	LS	12																
602002-003	GALVANIZED REINFORCING STEEL	LB	13	6,300	3,500			2,000	2,000			2,000	2,000	2,000		1,000	1,000		2,500
615010-003	TEMPORARY FALSEWORK	$ *	14	5,000	5,000			15,000	15,000			25,000	25,000	25,000		100,000	100,000		75,000
615028-001	GUIDED BEARING, ELASTOMERIC	EA		4	4			8	8			9	9	8		4	4		25
615039-001	JACKING STEEL SUPERSTRUCTURE	$ *		25,000	25,000			50,000	50,000			50,000	50,000	50,000		25,000	25,000		100,000
615075-001	MISCELLANEOUS BRIDGE WORK, REPLACE BRIDGE DRAINAGE SYSTEM IN ITS ENTIRETY, REPAIR R1	LS	15																
615075-001	MISCELLANEOUS BRIDGE WORK, DEBRIS REMOVAL, REPAIR C7	LS	16																
615075-001	MISCELLANEOUS BRIDGE WORK, REPAIR WINGWALL UNDERMINING AT ABUTMENT AW, REPAIR C8	LS																	
615075-001	MISCELLANEOUS BRIDGE WORK, INSTALL NEW SIGN SUPPORTS ON TRUSS, REPAIR M1	LS																	
615075-001	MISCELLANEOUS BRIDGE WORK, INSTALL NEW OVERHEAD SIGN SUPPORTS ON APPROACHES, REPAIR M2	LS																	
615075-002	MISCELLANEOUS BRIDGE WORK, CLEAN AND LUBRICATE EXISTING BEARING, REPAIR B4	EA				4	4			4	4				17	3	3	12	
615075-002	MISCELLANEOUS BRIDGE WORK, REPAIR BEARING TO REMAIN, REPAIR B5	EA													4				
615075-002	MISCELLANEOUS BRIDGE WORK, REMOVE PREVIOUS BEARING REPAIR/SHORING, REPAIR B6	EA											5	4					
615075-002	MISCELLANEOUS BRIDGE WORK, REPAIR STEEL GIRDER LOCAL DETERIORATION, REPAIR S1	EA																	
615075-002	MISCELLANEOUS BRIDGE WORK, REPAIR STEEL FLOORBEAM LOCAL DETERIORATION, REPAIR S3	EA																	
615075-002	MISCELLANEOUS BRIDGE WORK, REPAIR LATERAL BRACING LOCAL DETERIORATION, REPAIR S4	EA																	

NO.	REVISION	DATE	BY

WEST VIRGINIA DEPARTMENT OF TRANSPORTATION
DIVISION OF HIGHWAYS
ENGINEERING DIVISION

I-64 OVER KANAWHA RIVER
EUGENE A. CARTER MEMORIAL BRIDGE +3

SUMMARY OF QUANTITIES
(3 OF 7)

DESIGNED	DATE
DRAWN	
CHECKED	
REVIEWED	

HDR ENGINEERING INC.
CONSULTING ENGINEERS
CHARLESTON, WV
681-341-6100

SHEET OF

BRIDGE NO. 2563.6

SNOLEN $DD-MMM-YYYY HH:MM$ pw://pwhdruseas02.intranet.hdr:HDR_US_East_02/Documents/WV_DOT/WVDOT-Eugene_Carter_Bridge_3/6.0_CAD_BIM/6.2_WIP/HDR/6.2.2_Sheet_Files/23_Structure/Reference/str_ref_bdr_Eugene Carter Memorial.dgn

PROJECT NUMBERS		DISTRICT	COUNTY	SHEET NO.	TOTAL
STATE	FEDERAL				
S320-64-57.44 00	NHPP-0064 (497)D	1	KANAWHA		

ITEM DESCRIPTION				SUBSTRUCTURE												SUBSTRUCTURE				
				MAINLINE												MAINLINE				
ITEM NO.	DESCRIPTION	UNIT	QNTY. NOTE	ABUT. AW	ABUT. AE	PIER A1	PIER A2	PIER A3	PIER A4	PIER A5	PIER A6	PIER A7	PIER A8	PIER D3	PIER A	PIER B	PIER C	PIER D	PIER E
615075-002	MISCELLANEOUS BRIDGE WORK, REPAIR EXISTING OR INSTALL NEW STEEL DIAPHRAGM / CROSSFRAME, REPAIR S5	EA																	
615075-002	MISCELLANEOUS BRIDGE WORK, REPAIR OR STRENGTHEN STIFFENER / CONNECTION PLATE, REPAIR S6	EA																	
615075-002	MISCELLANEOUS BRIDGE WORK, REPAIR FIELD SPLICE, REPAIR S7	EA																	
615075-002	MISCELLANEOUS BRIDGE WORK, INSTALL STUD SHEAR CONNECTORS, REPAIR S8	EA	17																
615075-002	MISCELLANEOUS BRIDGE WORK, TRUSS MEMBER REPAIR, REPAIR S12	EA																	
615075-002	MISCELLANEOUS BRIDGE WORK, TRUSS GUSSET REPAIR, REPAIR S13	EA																	
615075-002	MISCELLANEOUS BRIDGE WORK, TRUSS MISCELLANEOUS REPAIR, REPAIR S14	EA																	
615075-002	MISCELLANEOUS BRIDGE WORK, FATIGUE RETROFIT - CRACK ARREST REPAIR, REPAIR S15	EA																	
615075-002	MISCELLANEOUS BRIDGE WORK, FATIGUE RETROFIT - OTHER, REPAIR S16	EA																	
615075-002	MISCELLANEOUS BRIDGE WORK, REPLACE BOLT, REPAIR S17	EA																	
615075-002	MISCELLANEOUS BRIDGE WORK, REMOVE TACK WELD, REPAIR S18	EA																	
615075-002	MISCELLANEOUS BRIDGE WORK, CROSS GIRDER REPAIR, REPAIR S20	EA																	
615075-002	MISCELLANEOUS BRIDGE WORK, MISCELLANEOUS STEEL REPAIR, REPAIR S21	EA																	
615075-002	MISCELLANEOUS BRIDGE WORK, REMOVE LATERAL BRACING MEMBER, REPAIR S23	EA																	
615075-002	MISCELLANEOUS BRIDGE WORK, PACK RUST REMOVAL, REPAIR P2	EA																	
627011-002	REMOVE AND REPLACE EXPANSION DEVICE, MODULAR JOINT	LF														130			
627011-002	REMOVE AND REPLACE EXPANSION DEVICE, STRIP SEAL	LF		60	60			60	60			60	60	30			130		130
627025-001	STRIP SEAL EXPANSION JOINT SYSTEM BEHIND THE APPROACH SLAB	LF																	
639001-001	CONSTRUCTION LAYOUT STAKE	LS																	
645001-001	PRIMARY REINFORCEMENT, 2,400 LBS/FT	SY	18																
662003-001	POLYVINYLCHLORIDE CONDUIT, 2 INCH DIAMETER, SCHEDULE 40	LS	19	200	200														
662006-001	JUNCTION BOX, TYPE A	EA	20																
662006-001	JUNCTION BOX, TYPE B	EA	21																
685001-001	BRIDGE CLEANING, CONCRETE PROTECTIVE COATING	SF *	22	6,000	6,000	1,100	1,250	2,700	3,100	4,250	4,500	6,000	5,700	2,000	16,000	30,000	30,000	12,500	14,000
685001-001	BRIDGE CLEANING, PAINTING STEEL BRIDGE, SPOT	SF *	23																
688001-001	CLEAN AND PAINT EXISTING STEEL BRIDGE, SPOT	SF *	23																
688003-001	CONTAINMENT AND DISPOSAL OF SPENT MATERIAL, CONCRETE PROTECTIVE COATING	SF *		6,000	6,000	1,100	1,250	2,700	3,100	4,250	4,500	6,000	5,700	2,000	16,000	30,000	30,000	12,500	14,000
688003-001	CONTAINMENT AND DISPOSAL OF SPENT MATERIAL, PAINTING STEEL BRIDGE, SPOT	SF *	23																

NO.	REVISION	DATE	BY

WEST VIRGINIA DEPARTMENT OF TRANSPORTATION
DIVISION OF HIGHWAYS
ENGINEERING DIVISION

I-64 OVER KANAWHA RIVER
EUGENE A. CARTER MEMORIAL BRIDGE +3

SUMMARY OF QUANTITIES
(4 OF 7)

DESIGNED	DATE
DRAWN	
CHECKED	
REVIEWED	

HDR ENGINEERING INC.
CONSULTING ENGINEERS
CHARLESTON, WV
681-341-6100

SHEET OF

BRIDGE NO. 2563.6

SNOLEN $DD-MMM-YYYY HH:MM$ pw://pwhdrusess02.intranet.hdr:HDR_US_East_02/Documents/WV_DOT/WVDOT-Eugene_Carter_Bridge_3/6.0_CAD_BIM/6.2_WIP/HDR/6.2.2_Sheet_Files/23_Structure/Reference/str_ref_bdr_Eugene Carter Memorial.dgn

PROJECT NUMBERS		DISTRICT	COUNTY	SHEET NO.	TOTAL
STATE	FEDERAL				
S320-64-57.44 00	NHPP-0064 (497)D	1	KANAWHA		

ITEM DESCRIPTION				SUBSTRUCTURE																	
				MAINLINE						RAMP C		RAMP D			RAMP E			RAMP F			TOTAL
ITEM NO.	DESCRIPTION	UNIT	QNTY. NOTE	PIER M	PIER R1	PIER EA	PIER EB	PIER FA	PIER FB	ABUT. C	PIER C8	ABUT. D	PIER D1	PIER D2	PIER EC	PIER ED	ABUT. E	PIER FC	PIER FD	ABUT. F	
203001-000	DISMANTLING STRUCTURE (2563.5)	$ *	1							20,000	20,000	20,000					20,000			20,000	3,785,000
212001-000	STRUCTURE EXCAVATION	CY								300		300					150			150	1,000
212010-003	SHORING	$ *	2							25,000		25,000					25,000			25,000	125,000
307001-000	AGGREGATE BASE COURSE, CLASS 1	CY	3							300		300					150			150	900
502001-012	12 UNCH PORTLAND CEMEMNT CONCRETE APPROACH SLAB	SY	4							65		65					65			65	540
601002-001	CLASS B CONCRETE	CY	5		6		2		2		2	4	8		4		4	4		4	117
601003-001	CLASS K CONCRETE	CY	6							10		10					10			10	1,245
601009-001	CLASS H CONCRETE	CY	7							30		30					20			20	6,885
601013-001	EPOXY RESIN PROTECTIVE COATING, REPAIR TYPE C4	SF *	8		100		150		150	150	150	150	150				150			150	6,250
601019-001	CONCRETE PROTECTIVE COATING, REPAIR TYPE C3	SF	9	4,850	1,600	1,050	800	1,050	800	5,000		5,000	1,200	1,800	550	460	3,000	600	550	3,000	285,210
601030-000	PATCHING CONCRETE STRUCTURES, REPAIR TYPE C1B	SF	10		2		4		8				9		1		3	2	1	2	720
601030-000	PATCHING CONCRETE STRUCTURES, REPAIR TYPE C1C	SF	10		2		4		8				9		1		3	2	1	2	720
601031-001	EPOXY INJECTION CRACK REPAIR, REPAIR TYPE C2	LF	10							6											670
601037-001	DOWEL HOLE, VARIABLE	EA	11		80		80		80	100	80	100	80		80		100	80		100	2,080
601055-001	VERTICAL CLEARANCE GAUGE, PIER B AND PIER C	LS	12																		1
602002-003	GALVANIZED REINFORCING STEEL	LB	13		1,500		500		500	10,000	500	11,000	2,000		1,000		8,500	1,000		8,500	2,062,300
615010-003	TEMPORARY FALSEWORK	$ *	14		25,000		10,000		10,000		20,000	5,000	20,000		10,000		5,000	10,000		5,000	510,000
615028-001	GUIDED BEARING, ELASTOMERIC	EA			6		2		2		4		8		4		4	4		4	121
615039-001	JACKING STEEL SUPERSTRUCTURE	$ *			30,000		20,000		20,000		50,000	25,000	50,000		25,000		25,000	25,000		25,000	745,000
615075-001	MISCELLANEOUS BRIDGE WORK, REPLACE BRIDGE DRAINAGE SYSTEM IN ITS ENTIRETY, REPAIR R1	LS	15																		1
615075-001	MISCELLANEOUS BRIDGE WORK, DEBRIS REMOVAL, REPAIR C7	LS	16																		1
615075-001	MISCELLANEOUS BRIDGE WORK, REPAIR WINGWALL UNDERMINING AT ABUTMENT AW, REPAIR C8	LS																			1
615075-001	MISCELLANEOUS BRIDGE WORK, INSTALL NEW SIGN SUPPORTS ON TRUSS, REPAIR M1	LS																			1
615075-001	MISCELLANEOUS BRIDGE WORK, INSTALL NEW OVERHEAD SIGN SUPPORTS ON APPROACHES, REPAIR M2	LS																			1
615075-002	MISCELLANEOUS BRIDGE WORK, CLEAN AND LUBRICATE EXISTING BEARING, REPAIR B4	EA		10		2		2	1			4		4		4			4		82
615075-002	MISCELLANEOUS BRIDGE WORK, REPAIR BEARING TO REMAIN, REPAIR B5	EA										4		2							10
615075-002	MISCELLANEOUS BRIDGE WORK, REMOVE PREVIOUS BEARING REPAIR/SHORING, REPAIR B6	EA																			9
615075-002	MISCELLANEOUS BRIDGE WORK, REPAIR STEEL GIRDER LOCAL DETERIORATION, REPAIR S1	EA																			1
615075-002	MISCELLANEOUS BRIDGE WORK, REPAIR STEEL FLOORBEAM LOCAL DETERIORATION, REPAIR S3	EA																			8
615075-002	MISCELLANEOUS BRIDGE WORK, REPAIR LATERAL BRACING LOCAL DETERIORATION, REPAIR S4	EA																			11

NO.	REVISION	DATE	BY

WEST VIRGINIA DEPARTMENT OF TRANSPORTATION
DIVISION OF HIGHWAYS
ENGINEERING DIVISION

I-64 OVER KANAWHA RIVER
EUGENE A. CARTER MEMORIAL BRIDGE +3

SUMMARY OF QUANTITIES
(5 OF 7)

DESIGNED	DATE
DRAWN	
CHECKED	
REVIEWED	

HDR ENGINEERING INC.
CONSULTING ENGINEERS
CHARLESTON, WV
681-341-6100

SHEET OF

BRIDGE NO. 2563.6

SNOLEN $DD-MMM-YYYY HH:MM$ pw://pwhdruseas02.intranet.hdr:HDR_US_East_02/Documents/WV_DOT/WVDOT-Eugene_Carter_Bridge_3/6.0_CAD_BIM/6.2_WIP/HDR/6.2.2_Sheet_Files/23_Structure/Reference/str_ref_bdr_Eugene Carter Memorial.dgn

PROJECT NUMBERS		DISTRICT	COUNTY	SHEET NO.	TOTAL
STATE	FEDERAL				
S320-64-57.44 00	NHPP-0064 (497)D	1	KANAWHA		

ITEM DESCRIPTION				SUBSTRUCTURE																		
				MAINLINE						RAMP C		RAMP D			RAMP E			RAMP F			TOTAL
ITEM NO.	DESCRIPTION	UNIT	QNTY. NOTE	PIER M	PIER R1	PIER EA	PIER EB	PIER FA	PIER FB	ABUT. C	PIER C8	ABUT. D	PIER D1	PIER D2	PIER EC	PIER ED	ABUT. E	PIER FC	PIER FD	ABUT. F	
615075-002	MISCELLANEOUS BRIDGE WORK, REPAIR EXISTING OR INSTALL NEW STEEL DIAPHRAGM / CROSSFRAME, REPAIR S5	EA																			27
615075-002	MISCELLANEOUS BRIDGE WORK, REPAIR OR STRENGTHEN STIFFENER / CONNECTION PLATE, REPAIR S6	EA																			17
615075-002	MISCELLANEOUS BRIDGE WORK, REPAIR FIELD SPLICE, REPAIR S7	EA																			11
615075-002	MISCELLANEOUS BRIDGE WORK, INSTALL STUD SHEAR CONNECTORS, REPAIR S8	EA	17																		100,800
615075-002	MISCELLANEOUS BRIDGE WORK, TRUSS MEMBER REPAIR, REPAIR S12	EA																			2
615075-002	MISCELLANEOUS BRIDGE WORK, TRUSS GUSSET REPAIR, REPAIR S13	EA																			1
615075-002	MISCELLANEOUS BRIDGE WORK, TRUSS MISCELLANEOUS REPAIR, REPAIR S14	EA																			24
615075-002	MISCELLANEOUS BRIDGE WORK, FATIGUE RETROFIT - CRACK ARREST REPAIR, REPAIR S15	EA																			11
615075-002	MISCELLANEOUS BRIDGE WORK, FATIGUE RETROFIT - OTHER, REPAIR S16	EA																			16
615075-002	MISCELLANEOUS BRIDGE WORK, REPLACE BOLT, REPAIR S17	EA																			8
615075-002	MISCELLANEOUS BRIDGE WORK, REMOVE TACK WELD, REPAIR S18	EA																			30
615075-002	MISCELLANEOUS BRIDGE WORK, CROSS GIRDER REPAIR, REPAIR S20	EA																			3
615075-002	MISCELLANEOUS BRIDGE WORK, MISCELLANEOUS STEEL REPAIR, REPAIR S21	EA																			7
615075-002	MISCELLANEOUS BRIDGE WORK, REMOVE LATERAL BRACING MEMBER, REPAIR S23	EA																			226
615075-002	MISCELLANEOUS BRIDGE WORK, PACK RUST REMOVAL, REPAIR P2	EA																			2
627011-002	REMOVE AND REPLACE EXPANSION DEVICE, MODULAR JOINT	LF																			130
627011-002	REMOVE AND REPLACE EXPANSION DEVICE, STRIP SEAL	LF			120		30		30				30								860
627025-001	STRIP SEAL EXPANSION JOINT SYSTEM BEHIND THE APPROACH SLAB	LF								30		30					30			30	120
639001-001	CONSTRUCTION LAYOUT STAKE	LS																			1
645001-001	PRIMARY REINFORCEMENT, 2,400 LBS/FT	SY	18							1,000		1,000					500			500	3,000
662003-001	POLYVINYLCHLORIDE CONDUIT, 2 INCH DIAMETER, SCHEDULE 40	LS	19							200		200					200			200	21,031
662006-001	JUNCTION BOX, TYPE A	EA	20							4		4					4			4	110
662006-001	JUNCTION BOX, TYPE B	EA	21																		8
685001-001	BRIDGE CLEANING, CONCRETE PROTECTIVE COATING	SF *	22	4,850	1,600	1,050	800	1,050	800	5,000		5,000	1,200	1,800	550	460	3,000	600	550	3,000	285,210
685001-001	BRIDGE CLEANING, PAINTING STEEL BRIDGE, SPOT	SF *	23																		114,330
688001-001	CLEAN AND PAINT EXISTING STEEL BRIDGE, SPOT	SF *	23																		114,330
688003-001	CONTAINMENT AND DISPOSAL OF SPENT MATERIAL, CONCRETE PROTECTIVE COATING	SF *		4,850	1,600	1,050	800	1,050	800	5,000		5,000	1,200	1,800	550	460	3,000	600	550	3,000	285,210
688003-001	CONTAINMENT AND DISPOSAL OF SPENT MATERIAL, PAINTING STEEL BRIDGE, SPOT	SF *	23																		114,330

NO.	REVISION	DATE	BY

WEST VIRGINIA DEPARTMENT OF TRANSPORTATION
DIVISION OF HIGHWAYS
ENGINEERING DIVISION

I-64 OVER KANAWHA RIVER
EUGENE A. CARTER MEMORIAL BRIDGE +3

SUMMARY OF QUANTITIES
(6 OF 7)

DESIGNED	DATE
DRAWN	
CHECKED	
REVIEWED	

HDR ENGINEERING INC.
CONSULTING ENGINEERS
CHARLESTON, WV
681-341-6100

SHEET OF

BRIDGE NO. 2563.6

$DD-MMM-YYYY HH:MM$
SNOLEN
pw://pwhdruseas02.intranet.hdr:HDR_US_East_02/Documents/WV_DOT/WVDOT-Eugene_Carter_Bridge_3/6.0_CAD_BIM6.2_WIP/HDR/6.2.2_Sheet_Files/23_Structure/Reference/str_ref_bdr_Eugene Carter Memorial.dgn

QUANTITY SUBTABLES UNDER DEVELOPMENT

PROJECT NUMBERS		DISTRICT	COUNTY	SHEET NO.	TOTAL
STATE	FEDERAL				
S320-64-57.44 00	NHPP-0064 (497)D	1	KANAWHA		

SUBTABLES

NO.	REVISION	DATE	BY

WEST VIRGINIA DEPARTMENT OF TRANSPORTATION
DIVISION OF HIGHWAYS
ENGINEERING DIVISION

I-64 OVER KANAWHA RIVER
EUGENE A. CARTER MEMORIAL BRIDGE +3

SUMMARY OF QUANTITIES
(7 OF 7)

DESIGNED	DATE
DRAWN	
CHECKED	
REVIEWED	

HDR ENGINEERING INC.
CONSULTING ENGINEERS
CHARLESTON, WV
681-341-6100

SHEET OF

BRIDGE NO. 2563.6

SNOLEN $DD-MMM-YYYY HH:MM$ pw://pwhdruseas02.intranet.hdr:HDR_US_East_02/Documents/WV_DOT/WVDOT-Eugene_Carter_Bridge_3/6.0_CAD_BIM/6.2_WIP/HDR/6.2.2_Sheet_Files/23_Structure/Reference/str_ref_bdr_Eugene Carter Memorial.dgn

PROJECT NUMBERS		DISTRICT	COUNTY	SHEET NO.	TOTAL
STATE	FEDERAL				
S320-64-57.44 00	NHPP-0064 (497)D	1	KANAWHA		

QUANTITY NOTES WILL BE PLACED UNDER THE QUANTITY TABLES ON SHEETS 1 TO 4 OF 5

QUANTITY NOTES:

1. DISMANTLING STRUCTURE INCLUDES REMOVAL OF ANY OVERLAYS OF THE BRIDGE DECKS, DECK SLABS, EXPANSION DAMS, PORTIONS OF STRUCTURAL STEEL, EXPANSION BEARINGS, PORTIONS OF ABUTMENTS, PEDESTALS, APPROACH SLABS, AND OTHER MISCELLANEOUS ITEMS AS SHOWN OR NOTED IN THE CONTRACT PLANS AND RELATED DOCUMENTS.

   WHEN PORTIONS OF SUBSTRUCTURE ARE REMOVED, CARE SHALL BE EXERCISED SO THAT EXISTING REINFORCING STEEL TO REMAIN IN PLACE IS NOT DAMAGED. ANY DAMAGED BARS SHALL BE REPLACED AT THE CONTRACTOR'S EXPENSE. WHEN THE DECK SLBS ARE REMOVED, CARE SHALL BE TAKEN NOT TO DAMAGE THE STRUCTURAL STEEL. ANY DAMAGE CAUSED TO THE EXISTIING STEEL WORK SHALL BE REPAIRED AT THE CONTRACTOR'S EXPENSE IN A MANNER APPROVED BY THE ENGINEER. SEE GENERAL NOTES FOR REQUIRED "WELD INSPECTION FOLLOWING DECK REMOVAL".

   FOR PROTECTIVE SHIELDING REQUIREMENTS, SEE TTCP GENERAL NOTES. FOR SPECIFIC REQUIREMENTS WHEN WORKING OVER RAILROAD PROPERTY, SEE THE BRIDGE GENERAL NOTES.

   GROUND LINES, FINAL SLOPES, AND SLOPE DRESSING SHALL BE AS DIRECTED BY THE ENGINEER.
2. THIS ITEM SHALL INCLUDE THE COST OF ANY SHORING REQUIRED FOR CONVERSION OF THE ABUTMENTS TO SEMI-INTEGRAL ABUTMENTS, AND FOR WORK ALONG THE WINGWALLS, INCLUDING ABUTMENT AW.
3. COMPONENT OF REINFORCED BACKFILL AT SEMI-INTEGRAL ABUTMENTS AT RAMPS C, D, E AND F.
4. SEE APPROACH SLAB DETAILS FOR MATERIALS AND WORK INCIDENTAL TO APPROACH SLAB ITEM. NON-INCIDENTAL APPROACH SLAB PAY ITEMS ARE INCLUDED WITH THE QUANTITIES OF THEIR ASSOCIATED ABUTMENT.
5. CLASS B CONCRETE SHALL BE USED IN REPAIRED PORTIONS OF THE ABUTMENTS AND WINGWALLS (NOT INCLUDING THE SEMI-INTEGRAL BACKWALL), AND NEW PEDESTALS AT THE ABUTMENTS AND PIERS.
6. CLASS K CONCRETE SHALL BE USED FOR BARRIERS. THE CLASS K CONCRETE FOR BARRIERS ON THE APPROACH SLABS ARE INCLUDED IN THIS TABLE UNDER THE ASSOCIATED ABUTMENT COLUMN.
7. QUANTITY OF CLASS H CONCRETE IINCLUDES CONCRETE IN THE FLUTES OF PERMANENT METAL DECK FORMS. SEE DECK/BARRIER QUANTITY TABLES FOR AREA OF PERMANENT METAL DECK FORMS. SUPERSTRUCTURE QUANTITY INCLUDES CONCRETE END DIAPHRAGMS AT SEMI-INTEGRAL ABUTMENTS.
8. EPOXY RESIN PROTECTIVE COATING SHALL BE APPLIED TO THE BRIDGE SEATS AND TOP OF PIER CAPS BENEATH EXPANSION JOINTS IN THE DECK IN ACCORDANCE WITH THE DETAILS AND STANDARD SPECIFICATIONS SECTIONS 601.13.2 AND 707.11.
9. AN APPROVED CONCRETE PROTECTIVE COATING IS TO BE APPLIED TO THE EXPOSED CONCRETE SURFACES OF THE BRIDGE EXCLUDING THE TOP OF THE ROADWAY SURFACE, AS INDICATED IN THE PLANS. THE SURFACES OF CONCRETE SHALL RECEIVE PROTECTIVE COATING IN ACCORDANCE WITH SECTION 601.13.3 OF THE STANDARD SPECIFICATIONS. THE FINISH COLOR OF THE CONCRETE SURFACES SHALL MEET SAE INTERNATIONAL AMS-STD-595A, FEDERAL NUMBER 37925, INSIGNIA WHITE.
10. SEE CONCRETE REPAIR DETAILS, SHEETS X TO X. SEE SUBSTRUCTURE REPAIR SHEETS FOR APPROXIMATE LOCATIONS AND QUANTITIES OF VARIOUS REPAIRS. FIELD VERIFY EXTENT OF REPAIRS AND NOTIFY ENGINEER IF ADDITIONAL REPAIRS ARE REQUIRED. ADJUSTED QUANTITIES HAVE BEEN INCLUDED AS A CONTINGENCY AS SHOWN IN THE PLANS. C1 REPAIRS HAVE BEEN SPLIT EVENLY BETWEEN C1B AND C1C BID ITEMS.
11. ANCHOR DOWELS INTO EXISTING CONCRETE USING HILTI HIT-RE EPOXY (OR APPROVED EQUAL) PER MANUFACTURER'S RECOMMENDATIONS. EPOXY IS INCIDENTAL TO DOWEL HOLE ITEM.
12. NEW VERTICAL CLEARANCE GAUGES SHALL BE INSTALLED TO PIERS B AND C IN ACCORDANCE WITH THE DETAILS.
13. SEE SUBTABLE ON SHEET X.
14. INCLUDES THE COST OF ANY FALSEWORK REQUIRED FOR JACKING STEEL SUPERSTRUCTURE OR OTHER ACCESS.
15. INCLUDES REMOVAL OF ALL EXISTING DRAINAGE SYSTEM COMPONENTS (INCLUDING FILLING OPEN HOLES IN STRUCTURAL STEEL WITH BOLTS AND PATCHING ANY CONNECTIONS TO EXISTING CONCRETE TO REMAIN), NEW SCUPPERS, DOWNSPOUTING, HANGERS, SUPPORTS, DRAIN BOXES, SPLASH BLOCKS AND ANY ADDITIONAL MATERIAL AND WORK NECESSARY TO REPLACE THE DRAINAGE SYSTEM AS DETAILED IN THE PLANS.
16. THIS ITEM INCLUDES THE REMOVAL OF DEBRIS FROM THE TOPS OF SUBSTRUCTURE UNITS. IT ALSO INCLUDES THE REMOVAL OF MISCELLANEOUS DEBRIS IN FRONT OF ABUTMENTS AS REQUIRED AND OTHER DEBRIS AS DIRECTED BY THE ENGINEER.
17. SEE S8 REPAIR DETAIL SHEETS FOR AN ESTIMATE OF NUMBER OF SHEAR STUDS AND LOCATIONS/SPACING.
18. SEE SUBTABLE ON SHEET X FOR MATERIALS AND WORK INCIDENTAL TO THE PRIMARY REINFORCEMENT PAY ITEM. ANY EXCAVATION REQUIRED FOR ITEM 645001-001 THAT IS OUTSIDE THE LIMITS OF THE REINFORCED BACKFILL SHOWN IS INCIDENTAL TO ITEM 645001-001.
19. INCLUDES 2 – 2" PVC CONDUITS IN EACH BARRIER. SEE SUBTABLE ON SHEET X FOR ESTIMATED TOTAL LENGTH.
20. SEE STANDARD TEL-41 FOR JUNCTION BOXES ON ROADWAY FACE OF F-SHAPE BARRIERS. HUBS AS REQUIRED.
21. SEE STANDARD TEL-42 FOR JUNCTION BOXES ON OUTSIDE FACE OF F-SHAPE BARRIERS. HUBS AS REQUIRED.
22. PERFORM BRIDGE CLEANING PRIOR TO ANY SURFACE PREPARATION FOR APPLICATION OF CONCRETE PROTECTIVE COATING OR EPOXY RESIN PROTECTIVE COATING.
23. CLEANING AND PAINTING OF STRUCTURAL STEEL SHALL BE LIMITED TO LOCAL AREAS WHERE STRUCTURAL STEEL REPAIRS ARE BEING PERFORMED AND IN OTHER ISOLATED AREAS AS INDICATED IN THE PLANS. SEE SUBTABLE ON SHEET X FOR AN ESTIMATE OF APPROXIMATE AREAS, THE TOTAL OF WHICH SHALL BE ASSUMED AS THE BASIS FOR THE WORK. ADDITIONAL AREAS MAY BE AS DIRECTED BY THE DIVISION'S REPRESENTATIVE IN THE FIELD.

NO.	REVISION	DATE	BY

WEST VIRGINIA DEPARTMENT OF TRANSPORTATION
DIVISION OF HIGHWAYS
ENGINEERING DIVISION

I-64 OVER KANAWHA RIVER
EUGENE A. CARTER MEMORIAL BRIDGE +3

INFO TO GO ON OTHER QUANTITY SHEETS

DESIGNED	DATE
DRAWN	
CHECKED	
REVIEWED	

HDR ENGINEERING INC.
CONSULTING ENGINEERS
CHARLESTON, WV
681-341-6100

SHEET OF

BRIDGE NO. 2563.6

pw://pwhdruseas02.intranet.hdr:HDR_US_East_02/Documents/WV_DOT/WVDOT-Eugene_Carter_Bridge_3\6.0_CAD_BIM\6.2_WIP\HDR\6.2.2_Sheet_Files\23_Structure\Reference\str_ref_bdr_Eugene Carter Memorial.dgn
$DD-MMM-YYYY HH:MM$
SNOLEN

PROJECT NUMBERS		DISTRICT	COUNTY	SHEET NO.	TOTAL
STATE	FEDERAL				
S320-64-57.44 00	NHPP-0064 (497)D	1	KANAWHA		

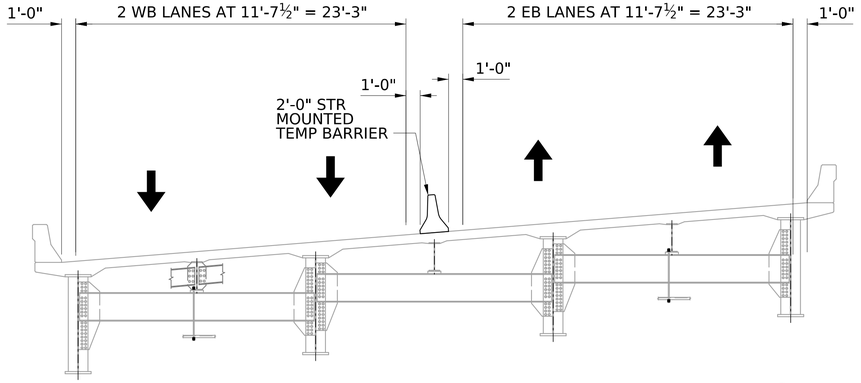

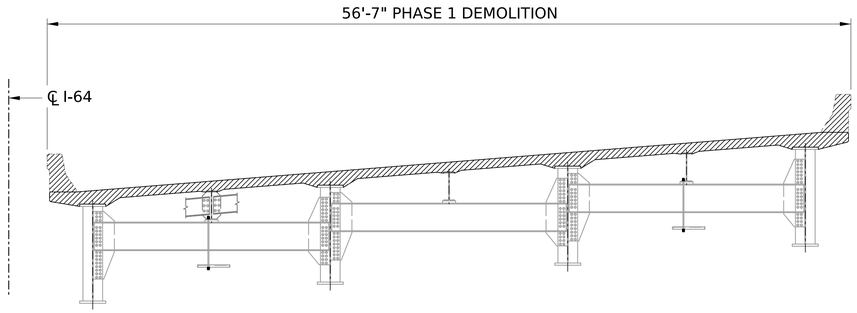

PHASE 1 DEMOLITION

(LOOKING AHEAD STATION)

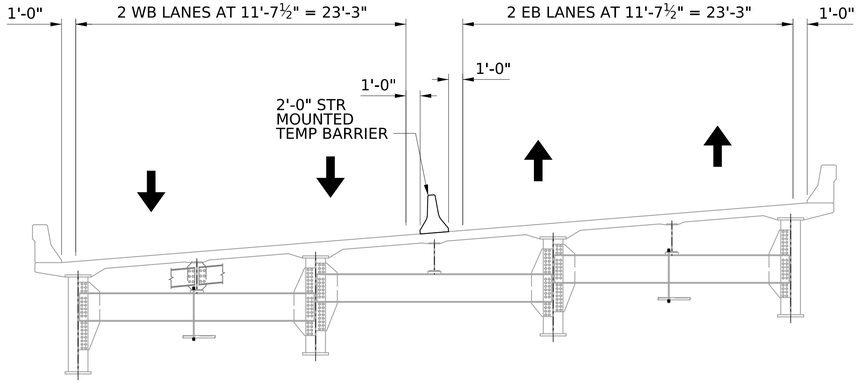

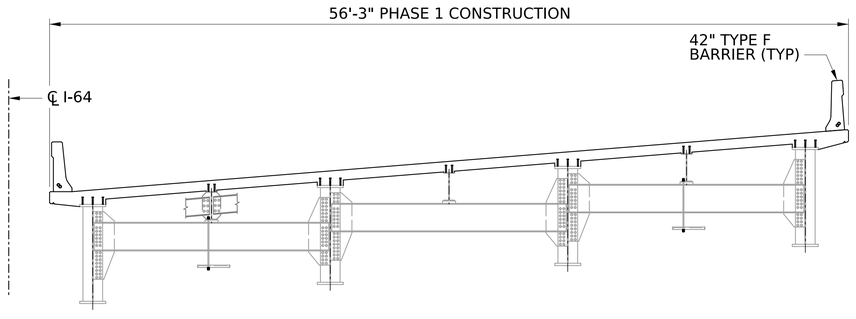

PHASE 1 CONSTRUCTION

(LOOKING AHEAD STATION)

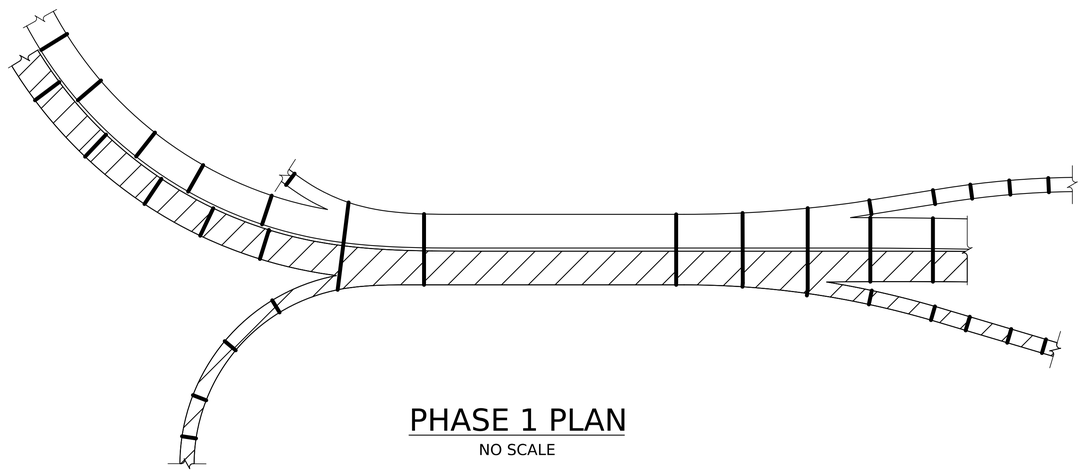

PHASE 1 PLAN

NO SCALE

▨ - WORK ZONE (DEMOLITION & CONSTRUCTION LIMITS)

SCALE : 2 0 2 4 6 ft.

3/16" = 1'-0"

TEMPORARY BARRIER NOTES:

1. TEMPORARY BARRIER SHALL BE IN ACCORDANCE WITH THE REQUIREMENTS OF WVDOH DESIGN DIRECTIVE 688. ALL BRIDGE MOUNTED TEMPORARY BARRIER SHALL BE ANCHORED TO THE BRIDGE DECK. CONTRACTOR IS RESPONSIBLE FOR THE DESIGN OF THE PROPOSED BARRIER AND ANCHORAGE, AND SHALL SUBMIT THE DESIGN TO THE DIVISION, SIGNED AND SEALED BY A REGISTERED PROFESSIONAL ENGINEER IN WEST VIRGINIA, PRIOR TO INSTALLATION.
2. FILL HOLES IN NEW DECK WITH NON-SHRINK EPOXY GROUT AFTER ANCHOR BOLT REMOVAL.
3. CONTRACTOR SHALL TAKE CARE NOT TO DAMAGE EXISTING BEAMS WHILE DRILLING HOLES.
4. THE COST FOR THE TEMPORARY BARRIER, INCLUDING INITIAL INSTALLATION, HARDWARE, REINFORCEMENT, EPOXY GROUT AND ALL OTHER ITEMS NECESSARY TO COMPLETE THE WORK SHALL BE PAID FOR UNDER THE ROADWAY ITEM 636017-006 "TEMPORARY BARRIER, STRUCTURE MOUNTED".
5. ADDITIONAL COST FOR RELOCATING THE MODIFIED TEMPORARY BARRIER DURING ALL STAGES OF CONSTRUCTION AS OUTLINED IN THESE PLANS SHALL BE PAID FOR UNDER THE ROADWAY ITEM 636018-006 "REMOVE AND RESET STRUCTURE MOUNTED BARRIER".

NOTES:

1. FOR GENERAL NOTES, SEE SHEETS AND .
2. FOR DECK CROSS SLOPE AND SUPERELEVATION INFORMATION, SEE ROADWAY SHEETS.
3. CONSTRUCT HIGH SIDE PERPENDICULAR TO THE DECK AND THE LOW SIDE BARRIER PLUMB.
4. FOR EXISTING AND PROPOSED TYPICAL SECTIONS, SEE SHEETS THRU .
5. EB AND WB SPAN 1 THRU SPAN 4 SHOWN. OTHER SPAN PHASING SIMILAR. SEE PHASE 1 PLAN.
6. OFF AND ON RAMPS ADJACENT TO MAINLINE WORK ZONE TO BE CLOSED CUNCURRENTLY FOR REHABILITATION ACTIVITES. SEE TEMPORARY TRAFFIC CONTROL PLANS FOR FURTHER DETAIL.

NO.	REVISION	DATE	BY

WEST VIRGINIA DEPARTMENT OF TRANSPORTATION
DIVISION OF HIGHWAYS
ENGINEERING DIVISION

I-64 OVER KANAWHA RIVER
EUGENE A. CARTER MEMORIAL BRIDGE +3

CONSTRUCTION PHASING (1 OF 2)

DESIGNED	KCO	DATE	12/25
DRAWN	KCO		12/25
CHECKED			
REVIEWED			

HDR ENGINEERING INC.
CONSULTING ENGINEERS
CHARLESTON, WV
681-341-6100

SHEET OF

BRIDGE NO. 2563.6

SNOLEN $DD-MMM-YYYY HH:MM$ pw://pwhdruseas02.intranet.hdr:HDR_US_East_02/Documents/WV_DOT/WVDOT-Eugene_Carter_Bridge_3/6.0_CAD_BIM/6.2_WIP/HDR/6.2.2_Sheet_Files/23_Structure/1.060 Construction Phasing (1 of 2)

PROJECT NUMBERS		DISTRICT	COUNTY	SHEET NO.	TOTAL
STATE	FEDERAL				
S320-64-57.44 00	NHPP-0064 (497)D	1	KANAWHA		

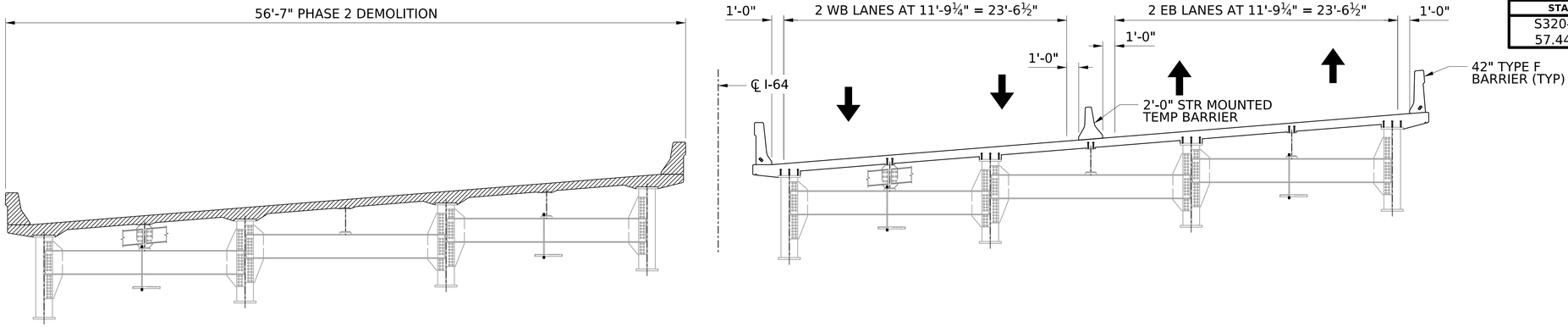

PHASE 2 DEMOLITION

(LOOKING AHEAD STATION)

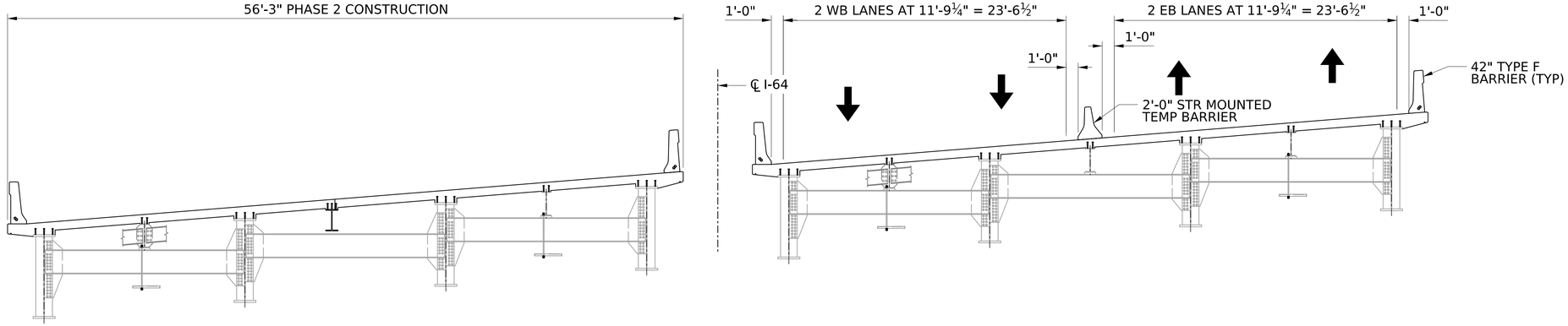

PHASE 2 CONSTRUCTION

(LOOKING AHEAD STATION)

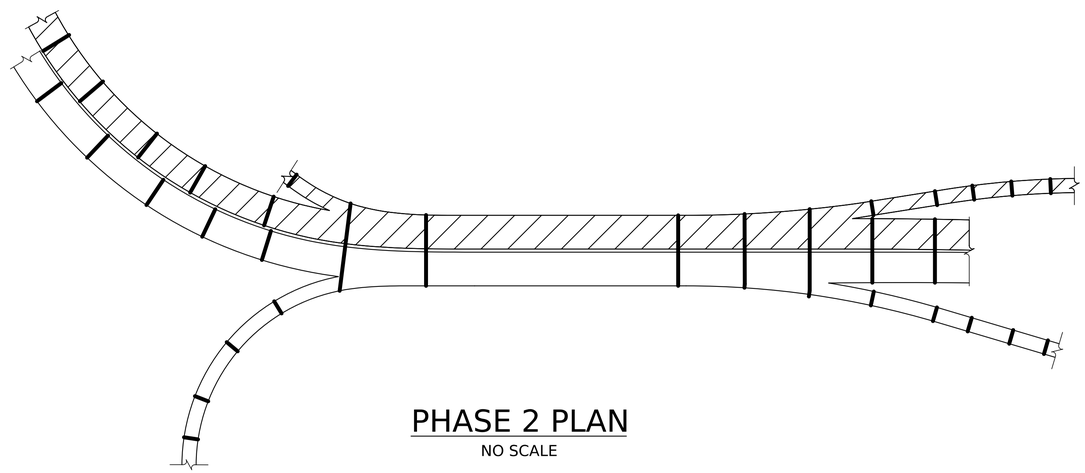

PHASE 2 PLAN

NO SCALE

- WORK ZONE (DEMOLITION & CONSTRUCTION LIMITS)

SCALE : 2 0 2 4 6 ft.

3/16" = 1'-0"

NOTES:

1. FOR CONSTRUCTION PHASING NOTES, SEE SHEET .

NO.	REVISION	DATE	BY

WEST VIRGINIA DEPARTMENT OF TRANSPORTATION
DIVISION OF HIGHWAYS
ENGINEERING DIVISION

I-64 OVER KANAWHA RIVER
EUGENE A. CARTER MEMORIAL BRIDGE +3
CONSTRUCTION PHASING (2 OF 2)

DESIGNED	KCO	DATE	12/25
DRAWN	KCO		12/25
CHECKED			
REVIEWED			

HDR ENGINEERING INC.
CONSULTING ENGINEERS
CHARLESTON, WV
681-341-6100

SHEET OF

BRIDGE NO. 2563.6

$DD-MMM-YYYY HH:MM$ pw://pwhdruseas02.intranet.hdr:HDR_US_East_02/Documents/WV_DOT/WVDOT-Eugene_Carter_Bridge_3/6.0_CAD_BIM/6.2_WIP/HDR/6.2.2_Sheet_Files/23_Structure/1.061 Construction Phasing (2 of 2) SNOLEN

PROJECT NUMBERS		DISTRICT	COUNTY	SHEET NO.	TOTAL
STATE	FEDERAL				
S320-64-57.44 00	NHPP-0064 (497)D	1	KANAWHA		

	ML WESTBOUND					ML EASTBOUND					MAINLINE COMBINED							
REPAIR CALLOUT KEY	ABUT AW	PIER A1	PIER A3	PIER A5	PIER A7	ABUT AE	PIER A2	PIER A4	PIER A6	PIER A8	PIER A	PIER B	PIER C	PIER D	PIER E	PIER M	PIER R1	COSTS INICLUDED IN ITEMS
SUBSTRUCTURE REPAIRS																		
C1 - PATCHIING CONCRETE STRUCTURES *	X	X	X		X					X		X	X	X	X		X	601030-000
C2 - EPOXY INJECTION CRACK REPAIR	X				X					X	X	X	X					601031-001
C3 - CONCRETE PROTECTIVE COATING	X	X	X	X	X	X	X	X	X	X	X	X	X	X	X	X	X	601019-001, 685001-001, 688003-001
C4 - EPOXY RESIN PROTECTIVE COATING	X		X		X	X		X		X		X	X		X		X	601013-001
C5 - CONCRETE PEDESTAL MODIFICATION	X		X		X	X		X		X		X	X		X		X	601002-001, 601037-001, 602002-003
C6 - MODIFICATIONS FOR SEMI-INTEGRAL ABUTMENT CONVERSION																		203001-000, 212001-000, 212010-003,
C7 - REMOVE DEBRIS FROM SUBSTRUCTURE UNIT **	X		X		X	X		X		X		X	X	X	X		X	615075-001
C8 - REPAIR WINGWALL UNDERMINING AT ABUTMENT AW	X																	615075-001
BEARING REPAIRS																		
B1 - REPLACE EXISTING BEARING WITH GUIDED BEARING, ELASTOMERIC	X		X		X	X		X		X		X	X		X		X	615028-001, 615039-001
~~B2 - REPLACE EXISTING BEARING WITH NON-GUIDED BEARING, ELASTOMERIC~~	~~X~~		~~X~~		~~X~~	~~X~~		~~X~~		~~X~~					~~X~~			~~615029-001, 615039-001~~
B4 - CLEAN AND LUBRICATE EXISTING BEARING		X		X			X		X		X	X	X	X		X		615075-002
B5 - REPAIR BEARING TO REMAIN (WITH DESCRIPTION)											X							615075-002
B6 - REMOVE PREVIOUS BEARING REPAIR / SHORING										X								203001-000
APPROACH SLAB REPAIRS																		
A1 - APPROACH SLAB REPLACEMENT WITH SLEEPER SLAB	X					X												502001-012
A2 - APPROACH SLAB REPLACEMENT WITH SLEEPER SLAB, REINF. BACKFILL AND NEW JOINT AT END OF APPROACH SLAB																		203001-000, 307001-000, 502001-012, 601003-001, 627025-001, 645001-001
EXPANSION JOINT REPAIRS																		
J1 - REPLACE EXISTING JOINT WITH STRIP SEAL JOINT	X		X		X	X		X		X			X		X		X	627011-002
J2 - REPLACE EXISTING JOINT WITH MODULAR JOINT												X						627011-002
J3 - REMOVE EXISTING JOINT IN CONJUNCTION WITH SEMI-INTEGRAL ABUTMENT CONVERSION																		627011-002

NOTE - NOT ALL REPAIR TYPES MAY BE PRESENT ON THIS PROJECT

* C1 REPAIRS ARE CLASSIFIED AS C1A OR C1B DEPENDING ON DEPTH OF REPAIR
C1A - DEPTH OF REPAIR LESS THAN OR EQUAL TO 2"
C1B - DEPTH OF REPAIR GREATER THAN 2"

** TYPICALLY ON TOP OF PIER CAPS AND ABUTMENT BRIDGE SEATS, BUT ALSO IN FRONT OF ABUTMENTS (E.G. HOMELESS ENCAMPMENT AT ABUTMENT D)

NO.	REVISION	DATE	BY

WEST VIRGINIA DEPARTMENT OF TRANSPORTATION
DIVISION OF HIGHWAYS
ENGINEERING DIVISION

I-64 OVER KANAWHA RIVER
EUGENE A. CARTER MEMORIAL BRIDGE +3

REPAIR CALLOUT KEY (1 OF 3)

DESIGNED	DATE
MAB	12/25
DRAWN	
ARG	12/25
CHECKED	
REVIEWED	

HDR ENGINEERING INC.
CONSULTING ENGINEERS
CHARLESTON, WV
681-341-6100

SHEET OF

BRIDGE NO. 2563.6

SNOLEN $DD-MMM-YYYY HH:MM$ pw://pwhdruseas02.intranet.hdr:HDR_US_East_02/Documents/WV_DOT/WVDOT-Eugene_Carter_Bridge_3/6.0_CAD_BIM/6.2_WIP/HDR/6.2.2_Sheet_Files/23_Structure/1.403 RepairCallout Key (1 of 3)

PROJECT NUMBERS		DISTRICT	COUNTY	SHEET NO.	TOTAL
STATE	FEDERAL				
S320-64-57.44 00	NHPP-0064 (497)D	1	KANAWHA		

	RAMP C		RAMP D				RAMP E					RAMP F					
REPAIR CALLOUT KEY	ABUT C	PIER C8	ABUT D	PIER D1	PIER D2	PIER D3	PIER EA	PIER EB	PIER EC	PIER ED	ABUT E	PIER FA	PIER FB	PIER FC	PIER FD	ABUT F	COSTS INICLUDED IN ITEMS
SUBSTRUCTURE REPAIRS																	
C1 - PATCHIING CONCRETE STRUCTURES *				X		X		X	X		X		X	X	X	X	601030-000
C2 - EPOXY INJECTION CRACK REPAIR	X					X											601031-001
C3 - CONCRETE PROTECTIVE COATING	X	X	X	X	X	X	X	X	X	X	X	X	X	X	X	X	601019-001, 685001-001, 688003-001
C4 - EPOXY RESIN PROTECTIVE COATING		X		X		X		X					X				601013-001
C5 - CONCRETE PEDESTAL MODIFICATION		X		X		X		X	X		X		X	X		X	601002-001, 601037-001, 602002-003
C6 - MODIFICATIONS FOR SEMI-INTEGRAL ABUTMENT CONVERSION	X		X								X					X	203001-000, 212001-000, 212010-003,
C7 - REMOVE DEBRIS FROM SUBSTRUCTURE UNIT **	X	X	X	X		X								X	X	X	615075-001
C8 - REPAIR WINGWALL UNDERMINING AT ABUTMENT AW																	615075-001
BEARING REPAIRS																	
B1 - REPLACE EXISTING BEARING WITH GUIDED BEARING, ELASTOMERIC		X		X		X		X	X		X		X	X		X	615028-001, 615039-001
B2 - REPLACE EXISTING BEARING WITH NON-GUIDED BEARING, ELASTOMERIC		X		X		X											615039-001, 615039-001
B4 - CLEAN AND LUBRICATE EXISTING BEARING	X		X		X		X	X		X		X	X		X		615075-002
B5 - REPAIR BEARING TO REMAIN (WITH DESCRIPTION)			X		X												615075-002
B6 - REMOVE PREVIOUS BEARING REPAIR / SHORING						X											203001-000
APPROACH SLAB REPAIRS																	
A1 - APPROACH SLAB REPLACEMENT WITH SLEEPER SLAB																	502001-012
A2 - APPROACH SLAB REPLACEMENT WITH SLEEPER SLAB, REINF. BACKFILL AND NEW JOINT AT END OF APPROACH SLAB	X		X								X					X	203001-000, 307001-000, 502001-012, 601003-001, 627025-001, 645001-001
EXPANSION JOINT REPAIRS																	
J1 - REPLACE EXISTING JOINT WITH STRIP SEAL JOINT		X		X		X		X					X				627011-002
J2 - REPLACE EXISTING JOINT WITH MODULAR JOINT																	627011-002
J3 - REMOVE EXISTING JOINT IN CONJUNCTION WITH SEMI-INTEGRAL ABUTMENT CONVERSION	X		X								X					X	627011-002

NOTE - NOT ALL REPAIR TYPES MAY BE PRESENT ON THIS PROJECT

* C1 REPAIRS ARE CLASSIFIED AS C1A OR C1B DEPENDING ON DEPTH OF REPAIR
C1A - DEPTH OF REPAIR LESS THAN OR EQUAL TO 2"
C1B - DEPTH OF REPAIR GREATER THAN 2"

** TYPICALLY ON TOP OF PIER CAPS AND ABUTMENT BRIDGE SEATS, BUT ALSO IN FRONT OF ABUTMENTS (E.G. HOMELESS ENCAMPMENT AT ABUTMENT D)

NO.	REVISION	DATE	BY

WEST VIRGINIA DEPARTMENT OF TRANSPORTATION
DIVISION OF HIGHWAYS
ENGINEERING DIVISION

I-64 OVER KANAWHA RIVER
EUGENE A. CARTER MEMORIAL BRIDGE +3

REPAIR CALLOUT KEY (2 OF 3)

DESIGNED	DATE
MAB	12/25
DRAWN	
ARG	12/25
CHECKED	
REVIEWED	

HDR ENGINEERING INC.
CONSULTING ENGINEERS
CHARLESTON, WV
681-341-6100

SHEET OF

BRIDGE NO. 2563.6

SNOLEN $DD-MMM-YYYY HH:MM$ pw://pwhdruseas02.intranet.hdr:HDR_US_East_02/Documents/WV_DOT/WVDOT-Eugene_Carter_Bridge_3/6.0_CAD_BIM/6.2_WIP/HDR/6.2.2_Sheet_Files/23_Structure/1.404 RepairCallout Key (2 of 3)

PROJECT NUMBERS		DISTRICT	COUNTY	SHEET NO.	TOTAL
STATE	FEDERAL				
S320-64-57.44 00	NHPP-0064 (497)D	1	KANAWHA		

	ML WESTBOUND						ML EASTBOUND						RAMP D		RAMP E	RAMP F		
REPAIR CALLOUT KEY	SPANS 1 & 2	SPANS 3 & 4	SPANS 5, 6 & CA	SPAN 7	SPANS 8 & 9	SPANS 10, 11, DE & EE	SPANS 1 & 2	SPANS 3 & 4	SPANS 5, 6 & DA	SPAN 7	SPANS 8 & 9	SPANS 10 & 11	SPAN D1	SPANS D2 & D3	SPANS E1 - E3	SPAN DF & EF	SPANS F1 - F3	COSTS INCLUDED IN ITEMS
SUPERSTRUCTURE REPAIRS																		
S1 - REPAIR STEEL GIRDER LOCAL DETERIORATION						X												615075-002
~~S2 - REPAIR STEEL STRINGER LOCAL DETERIORATION~~																		~~615075-002~~
S3 - REPAIR STEEL FLOORBEAM LOCAL DETERIORATION				X						X								615075-002
S4 - REPAIR LATERAL BRACING LOCAL DETERIORATION		X	X	X				X	X	X								615075-002
S5 - REPAIR EXISTING OR INSTALL NEW STEEL DIAPHRAGM / CROSSFRAME			X						X						X		X	615075-002
S6 - REPAIR OR STRENGTHEN STIFFENER / CONNECTION PLATE								X							X		X	615075-002
S7 - REPAIR FIELD SPLICE		X	X		X	X		X			X	X						615075-002
S8 - INSTALL STUD SHEAR CONNECTORS	X	X	X	X	X	X	X	X	X	X	X	X	X	X	X	X	X	615075-002
~~S9 - STRENGTHEN STEEL GIRDER~~																		~~615075-002~~
~~S10 - STRENGTHEN STEEL STRINGER~~																		~~615075-002~~
~~S11 - STRENGTHEN STEEL FLOORBEAM~~																		~~615075-002~~
S12 - TRUSS MEMBER REPAIR										X								615075-002
S13 - TRUSS GUSSET REPAIR										X								615075-002
S14 - TRUSS MISCELLANEOUS REPAIR (WITH DESCRIPTION)				X						X								615075-002
S15 - FATIGUE RETROFIT - CRACK ARREST REPAIR		X		X				X	X									615075-002
S16 - FATIGUE RETROFIT OTHER (WITH DESCRIPTION)															X			615075-002
S17 - REPLACE BOLT					X	X					X							615075-002
S18 - REMOVE TACK WELD				X	X					X								615075-002
~~S19 - SIGN BRACKET REPAIR~~																		~~615075-002~~
S20 - CROSS GIRDER REPAIR									X								X	615075-002
S21 - MISCELLANEOUS STEEL REPAIR (WITH DESCRIPTION)				X						X								615075-002
S23 - REMOVE LATERAL BRACING MEMBER	X	X	X				X	X	X									615075-002
CLEANING AND PAINTING																		
P1 - CLEAN AND PAINT BRIDGE STRUCTURAL STEEL	X	X	X	X	X	X	X	X	X	X	X	X	X	X	X	X	X	685001-001, 688001-001, 688003-001
P2 - PACK RUST REMOVAL															X		X	
MISCELLANEOUS WORK																		
M1 - INSTALL NEW SIGN SUPPORTS ON TRUSS																		TBD
M2 - INSTALL NEW OVERHEAD SIGN SUPPORTS ON APPROACHES																		TBD
DRAINAGE REPAIRS																		
R1 - REPLACE BRIDGE DRAINAGE SYSTEM IN ITS ENTIRETY	X	X	X	X	X	X	X	X	X	X	X	X	X	X	X	X	X	615075-001
DECK AND BARRIER REPAIRS																		
D1 - CONCRETE DECK AND BARRIER REPLACEMENT	X	X	X	X	X	X	X	X	X	X	X	X	X	X	X	X	X	203001-000, 601003-001, 601009-001, 602002-003
D3 - CONSTRUCT CONCRETE SEMI-INTEGRAL ABUTMENT DIAPHRAGM													X		X		X	601009-001, 602002-003
D4 - CONSTRUCT LIGHT POLE BLISTER ON NEW BARRIER																		601003-001, 602002-003
D5 - INSTALL JUNCTION BOX IN NEW BARRIER	X	X	X	X	X	X	X	X	X	X	X	X	X	X	X	X	X	662006-001
D6 - INSTALL BARRIER HOOD PLATE AT TRANSITION TO ROADWAY BARRIER	X						X											TBD
D7 - INSTALL NEW IMPACT ATTENUATOR			X								X		X					TBD
D8 - BARRIER AND OVERHANG CONCRETE PROTECTIVE COATING	X	X	X	X	X	X	X	X	X	X	X	X	X	X	X	X	X	601019-001, 685001-001, 688003-001

NOTE - NOT ALL REPAIR TYPES MAY BE PRESENT ON THIS PROJECT

* C1 REPAIRS ARE CLASSIFIED AS C1A OR C1B DEPENDING ON DEPTH OF REPAIR
C1A - DEPTH OF REPAIR LESS THAN OR EQUAL TO 2"
C1B - DEPTH OF REPAIR GREATER THAN 2"

NO.	REVISION	DATE	BY

WEST VIRGINIA DEPARTMENT OF TRANSPORTATION
DIVISION OF HIGHWAYS
ENGINEERING DIVISION

I-64 OVER KANAWHA RIVER
EUGENE A. CARTER MEMORIAL BRIDGE +3

REPAIR CALLOUT KEY (3 OF 3)

DESIGNED	DATE
MAB	12/25
DRAWN	
ARG	12/25
CHECKED	
REVIEWED	

HDR ENGINEERING INC.
CONSULTING ENGINEERS
CHARLESTON, WV
681-341-6100

SHEET OF
BRIDGE NO. 2563.6

pw://pwhdruseas02.intranet.hdr:HDR_US_East_02/Documents/WV_DOT/WVDOT-Eugene_Carter_Bridge_3/6.0_CAD_BIM/6.2_WIP/HDR/6.2.2_Sheet_Files/23_Structure/1.405 RepairCallout Key (3 of 3)
$DD-MMM-YYYY HH:MM$
SNOLEN

CHECK REPAIRS

PROJECT NUMBERS		DISTRICT	COUNTY	SHEET NO.	TOTAL
STATE	FEDERAL				
S320-64-57.44 00	NHPP-0064 (497)D	1	KANAWHA		

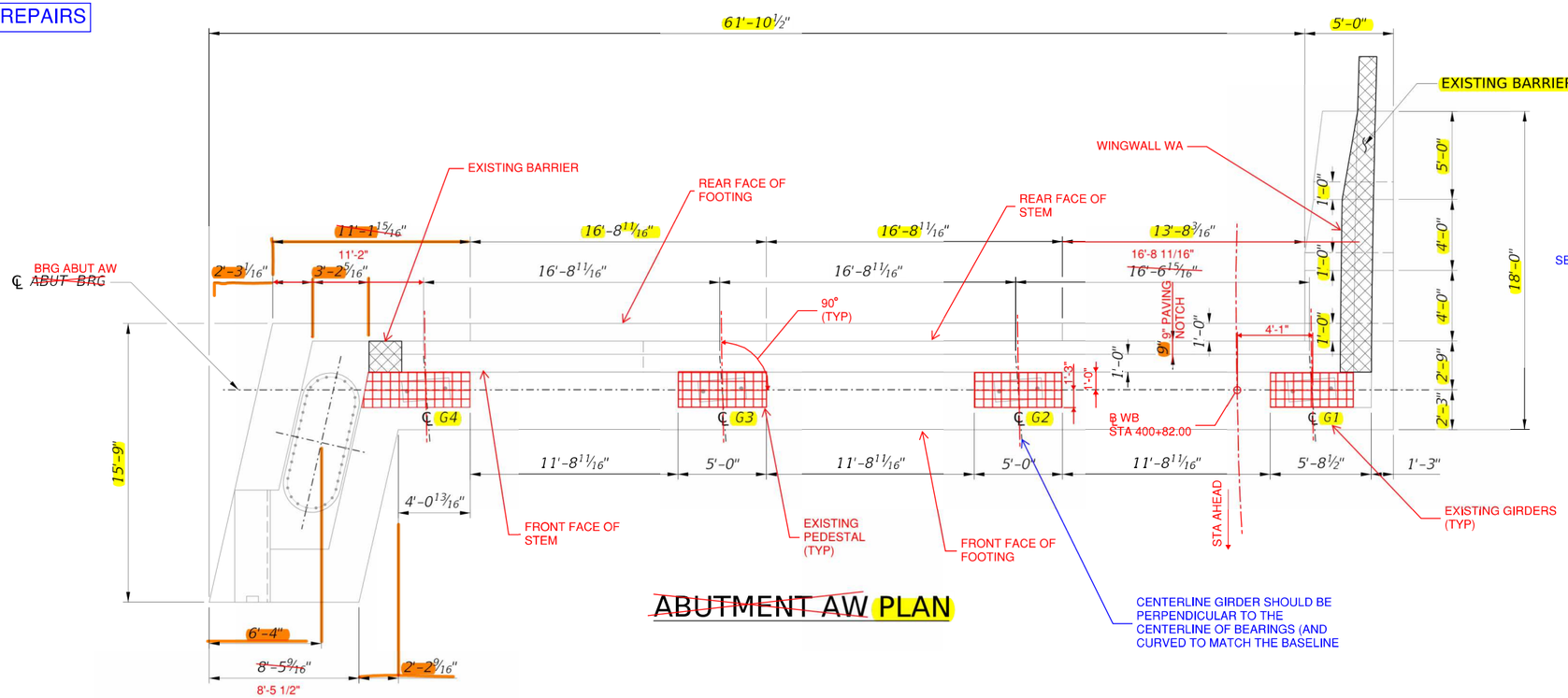

ABUTMENT AW PLAN

CENTERLINE GIRDER SHOULD BE PERPENDICULAR TO THE CENTERLINE OF BEARINGS (AND CURVED TO MATCH THE BASELINE

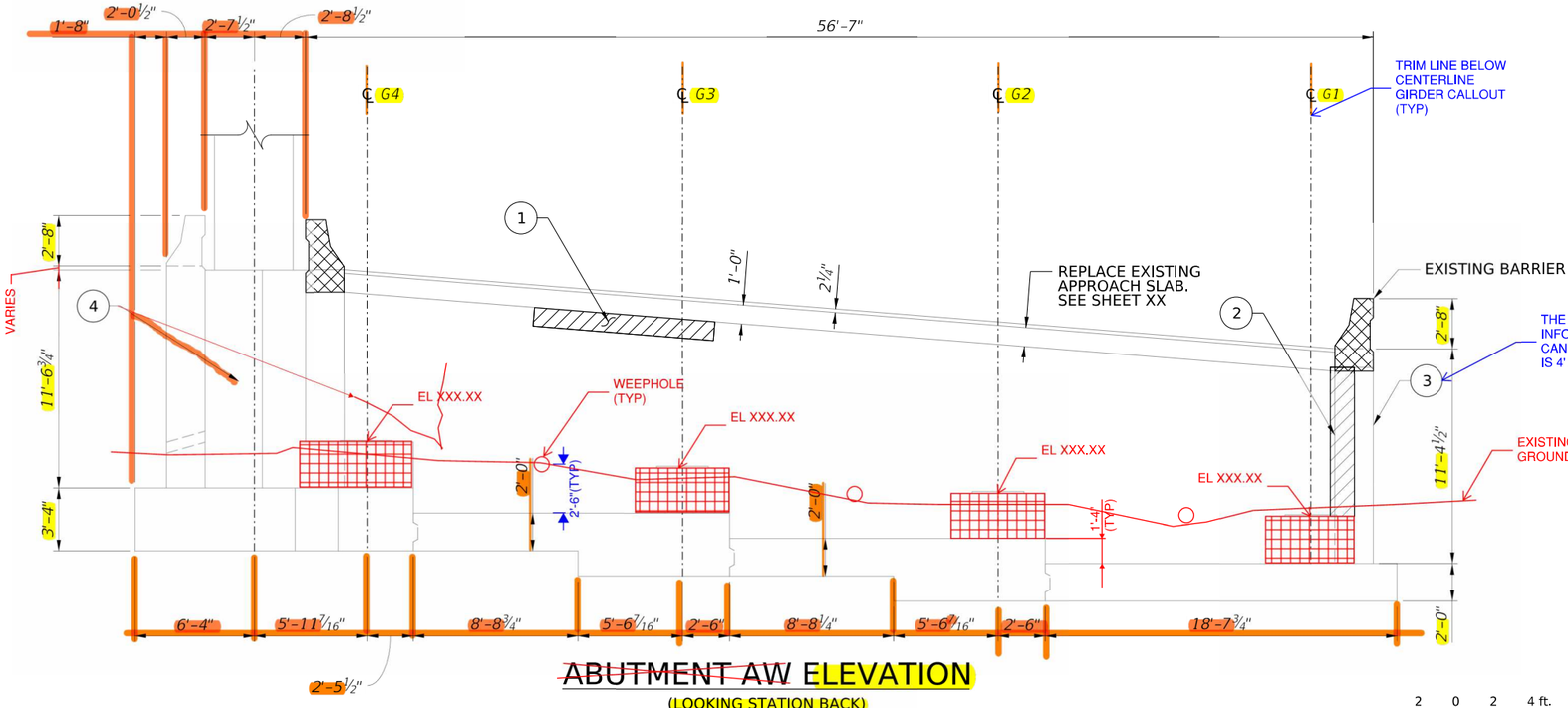

ABUTMENT AW ELEVATION

(LOOKING STATION BACK)

2 0 2 4 ft.

¼" = 1'-0"

SUMMARY OF CONCRETE REPAIR QUANTITIES			
ID	UNIT	ESTIMATED QUANTITY	REPAIR
1	SF	1	C1
2	SF	9	C1
3	SF	16	C1
TOTAL C1 (DOCUMENTED)		26	
TOTAL C1 (ADJUSTED)		~~33~~ 34	
4	LF	8	C2
TOTAL C2 (DOCUMENTED)		8	C2
TOTAL C2 (ADJUSTED)		10	C2

C1 QUANTITY INCLUDES BOTH C1B AND C1C REPAIRS.

SEE NOTE BELOW

5. FOR NEW PEDESTAL DETAILS, SEE SHEETS XX THRU XX.

LEGEND:

- CONCRETE REMOVAL
- CONCRETE REPAIR
- (#) REPAIR ID NUMBER

NOTES:

1. FOR GENERAL NOTES, SEE SHEETS XX AND XX.
2. FOR ADDITIONAL DIMENSIONS AND INFORMATION, SEE EXISTING BRIDGE PLANS.
3. CLEAN ALL EXISTING WEEPHOLES THAT REMAIN AFTER DEMOLITION OF THE PORTIONS OF THE SUBSTRUCTURE UNITS AS INDICATED ON THE PLANS. PAYMENT FOR CLEANING OF WEEPHOLES IS INCIDENTAL TO ITEM 212001-000, "STRUCTURE EXCAVATION".
4. ADJUSTED REPAIR QUANTITIES TOTALS INCLUDE 30% CONTINGENCY FOR CONCRETE REPAIR DETAILS, SEE SHEETS X THRU X.

NO.	REVISION	DATE	BY

WEST VIRGINIA DEPARTMENT OF TRANSPORTATION
DIVISION OF HIGHWAYS
ENGINEERING DIVISION

I-64 OVER KANAWHA RIVER
EUGENE A. CARTER MEMORIAL BRIDGE +3

SUBSTRUCTURE REPAIRS
ABUTMENT AW (1 OF 3)

DESIGNED	DATE
ABO	08/25
DRAWN	
AFMO	08/25
CHECKED	
REVIEWED	

HDR ENGINEERING INC.
CONSULTING ENGINEERS
CHARLESTON, WV
681-341-6100

SHEET OF

BRIDGE NO. 2563.6

SNOLEN $DD-MMM-YYYY HH:MM$ pw://pwhdruseas02.Intranet.hdr:HDR_US_East_02/Documents/WV_DOT/WVDOT-Eugene_Carter_Bridge_3/6.0_CAD_BIM/6.2_WIP/HDR/6.2.2_Sheet_Files/23_Structure/2.011 Substructure Repair Abutment AW (1 of x).dgn

PROJECT NUMBERS		DISTRICT	COUNTY	SHEET NO.	TOTAL
STATE	FEDERAL				
S320-64-57.44 00	NHPP-0064 (497)D	1	KANAWHA		

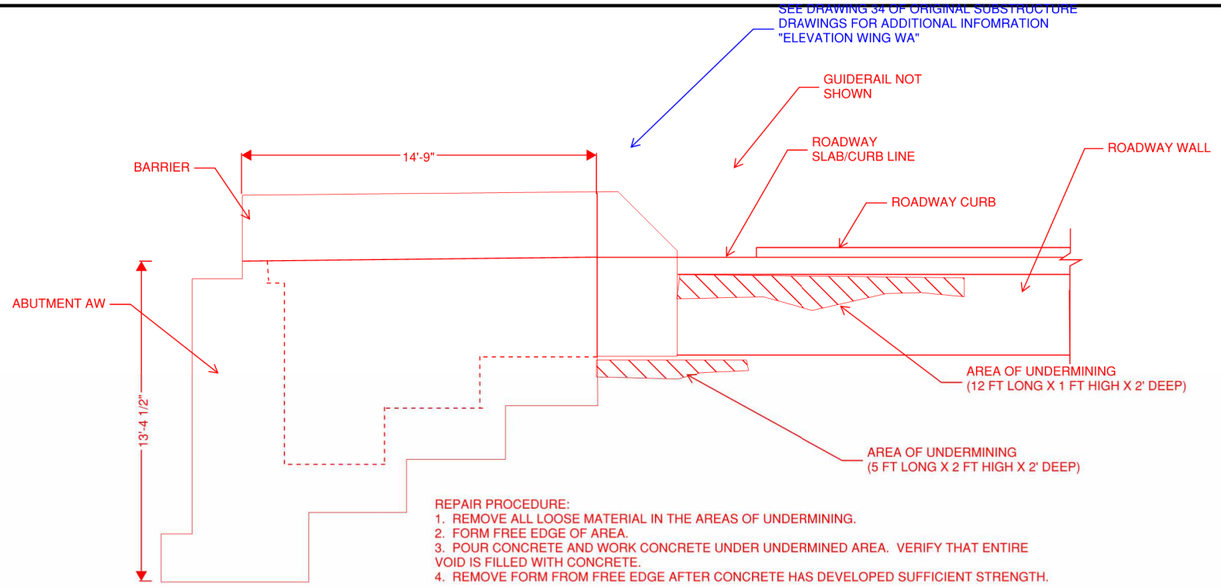

REPAIR PROCEDURE:
1. REMOVE ALL LOOSE MATERIAL IN THE AREAS OF UNDERMINING.
2. FORM FREE EDGE OF AREA.
3. POUR CONCRETE AND WORK CONCRETE UNDER UNDERMINED AREA. VERIFY THAT ENTIRE VOID IS FILLED WITH CONCRETE.
4. REMOVE FORM FROM FREE EDGE AFTER CONCRETE HAS DEVELOPED SUFFICIENT STRENGTH.

ELEVATION - WINGWALL WA

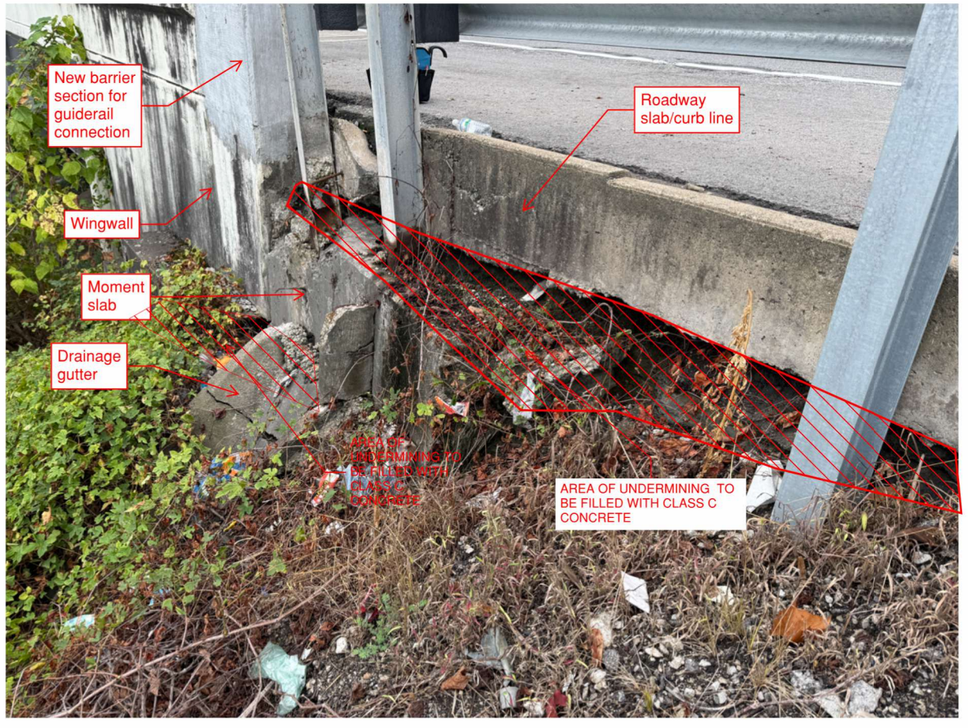

NOTES:

1. FOR GENERAL NOTES, SEE SHEETS XX AND XX.
2. FOR ADDITIONAL DIMENSIONS AND INFORMATION, SEE EXISTING BRIDGE PLANS.
3. CLEAN ALL EXISTING WEEPHOLES THAT REMAIN AFTER DEMOLITION OF THE PORTIONS OF THE SUBSTRUCTURE UNITS AS INDICATED ON THE PLANS. PAYMENT FOR CLEANING OF WEEPHOLES IS INCIDENTAL TO ITEM 212001-000, "STRUCTURE EXCAVATION".
4. ADJUSTED REPAIR QUANTITIES TOTALS INCLUDE 30% CONTINGENCY FOR CONCRETE REPAIR DETAILS, SEE SHEETS X THRU X.

NO.	REVISION	DATE	BY

WEST VIRGINIA DEPARTMENT OF TRANSPORTATION
DIVISION OF HIGHWAYS
ENGINEERING DIVISION

I-64 OVER KANAWHA RIVER
EUGENE A. CARTER MEMORIAL BRIDGE +3

SUBSTRUCTURE REPAIRS
ABUTMENT AW (2 OF 3)

2 0 2 4 ft.
¼" = 1'-0"

DESIGNED	ABO	08/25
DRAWN	AFMO	08/25
CHECKED		
REVIEWED		

HDR ENGINEERING INC.
CONSULTING ENGINEERS
CHARLESTON, WV
681-341-6100

SHEET OF
BRIDGE NO. 2563.6

SNOLEN $DD-MMM-YYYY HH:MM$ pw://pwhdruseas02.bntranet.hdr:HDR_US_East_02/Documents/WV_DOT/WVDOT-Eugene_Carter_Bridge_3/6.0_CAD_BIM/6.2_WIP/HDR/6.2.2_Sheet_Files/23_Structure/2.011 Substructure Repair Abutment AW (1 of x).dgn

PROJECT NUMBERS		DISTRICT	COUNTY	SHEET NO.	TOTAL
STATE	FEDERAL				
S320-64-57.44 00	NHPP-0064 (497)D	1	KANAWHA		

ABUTMENT AW REPAIR ID 2

ABUTMENT AW SEDIMENT REMOVAL

ABUTMENT AW REPAIR ID 4

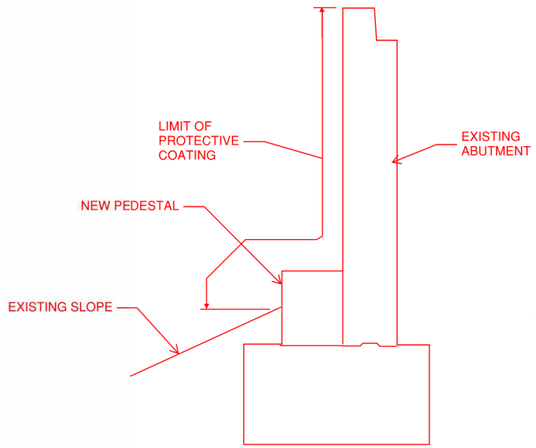

ABUTMENT

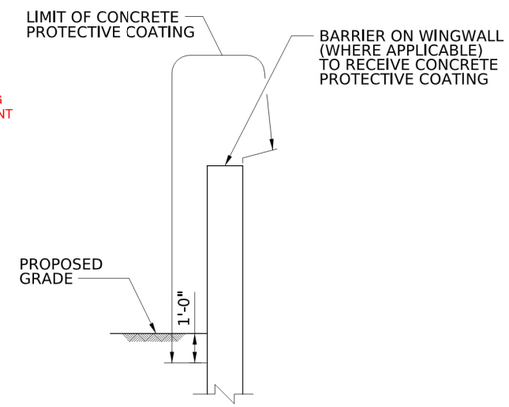

WINGWALL

CONCRETE PROTECTIVE COATING

NOTES:

1. FOR GENERAL NOTES, SEE SHEETS XX AND XX.
2. FOR ADDITIONAL DIMENSIONS AND INFORMATION, SEE EXISTING BRIDGE PLANS.
3. CLEAN ALL EXISTING WEEPHOLES THAT REMAIN AFTER DEMOLITION OF THE PORTIONS OF THE SUBSTRUCTURE UNITS AS INDICATED ON THE PLANS. PAYMENT FOR CLEANING OF WEEPHOLES IS INCIDENTAL TO ITEM 212001-000, "STRUCTURE EXCAVATION".
4. ADJUSTED REPAIR QUANTITIES TOTALS INCLUDE 30% CONTINGENCY FOR CONCRETE REPAIR DETAILS, SEE SHEETS X THRU X.

2 0 2 4 ft.
¼" = 1'-0"

NO.	REVISION	DATE	BY

WEST VIRGINIA DEPARTMENT OF TRANSPORTATION
DIVISION OF HIGHWAYS
ENGINEERING DIVISION

I-64 OVER KANAWHA RIVER
EUGENE A. CARTER MEMORIAL BRIDGE +3
SUBSTRUCTURE REPAIRS
ABUTMENT AW (3 OF 3)

DESIGNED	ABO	DATE	08/25
DRAWN	AFMO		08/25
CHECKED			
REVIEWED			

HDR ENGINEERING INC.
CONSULTING ENGINEERS
CHARLESTON, WV
681-341-6100

SHEET OF
BRIDGE NO. 2563.6

SNOLEN $DD-MMM-YYYY HH:MM:$ pw://pwhdruseas02.Intranet.hdr:HDR_US_East_02/Documents/WV_DOT/WVDOT-Eugene_Carter_Bridge_3/6.0_CAD_BIM/6.2_WIP/HDR/6.2.2_Sheet_Files/23_Structure/2.011 Substructure Repair Abutment AW (1 of x).dgn

PROJECT NUMBERS		DISTRICT	COUNTY	SHEET NO.	TOTAL
STATE	FEDERAL				
S320-64-57.44 00	NHPP-0064 (497)D	1	KANAWHA		

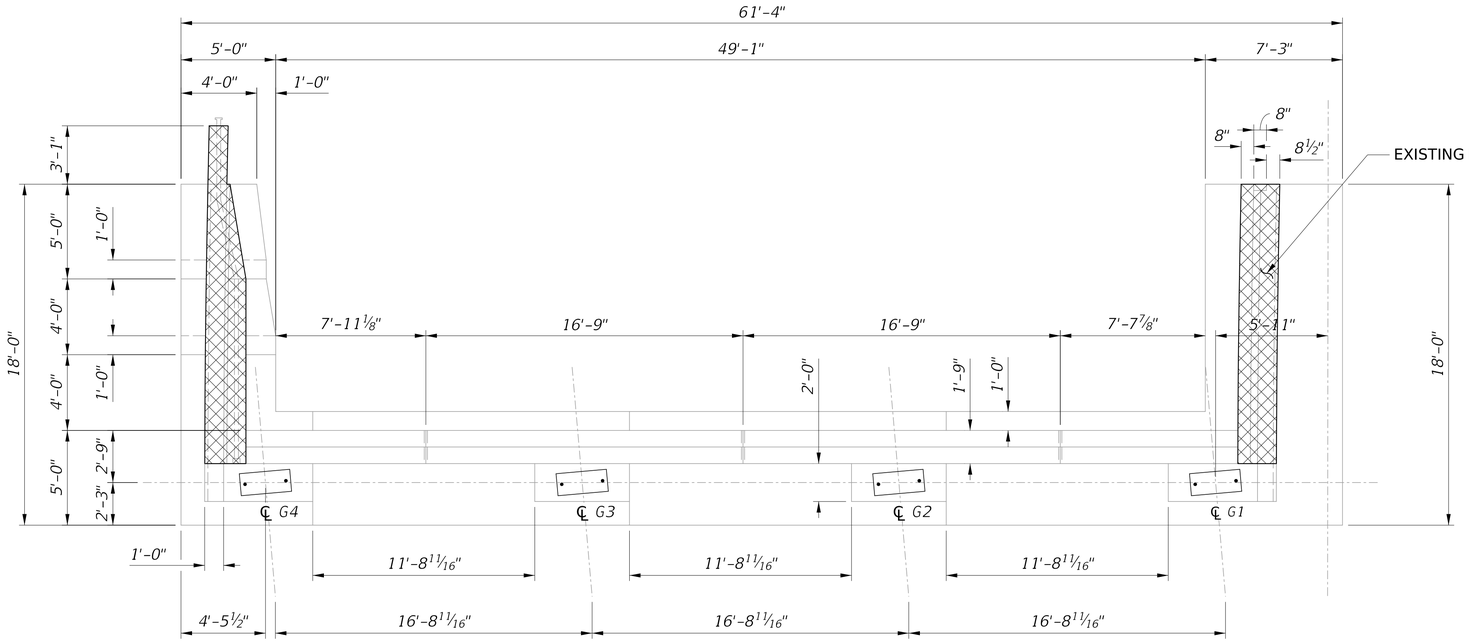

ABUTMENT AE PLAN

SUMMARY OF CONCRETE REPAIR QUANTITIES			
ID	UNIT	ESTIMATED QUANTITY	REPAIR
1	SF	2	C1
2	SF	120	C1
3	SF	14	C1
4	SF	9	C1
5	SF	9	C1
TOTAL C1 (DOCUMENTED)		154	
TOTAL C1 (ADJUSTED)		201	
6	LF	12	C2
TOTAL C2 (DOCUMENTED)		12	
TOTAL C2 (ADJUSTED)		16	

C1 QUANTITY INCLUDES BOTH C1B AND C1C REPAIRS.

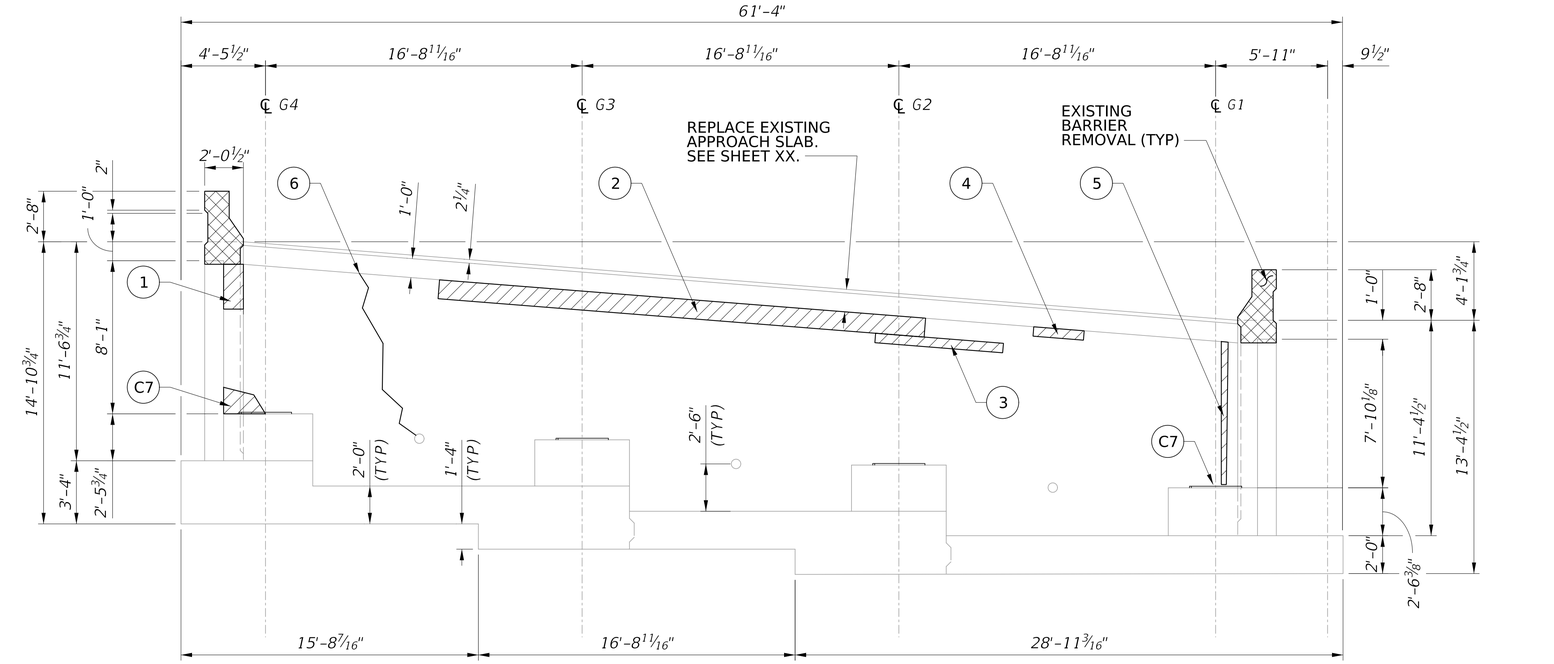

ABUTMENT AE ELEVATION

(LOOKING STATION BACK)

2 0 2 4 ft.

¼" = 1'-0"

LEGEND:

- CONCRETE REMOVAL
- CONCRETE REPAIR
- (#) REPAIR ID NUMBER
- EPOXY INJECTION CRACK REPAIR

NOTES:

1. FOR GENERAL NOTES, SEE SHEETS XX AND XX.
2. FOR ADDITIONAL DIMENSIONS AND INFORMATION, SEE EXISTING BRIDGE PLANS.
3. CLEAN ALL EXISTING WEEPHOLES THAT REMAIN AFTER DEMOLITION OF THE PORTIONS OF THE SUBSTRUCTURE UNITS AS INDICATED ON THE PLANS. PAYMENT FOR CLEANING OF WEEPHOLES IS INCIDENTAL TO ITEM 212001-000, "STRUCTURE EXCAVATION".
4. ADJUSTED REPAIR QUANTITIES TOTALS INCLUDE 30% CONTINGENCY FOR CONCRETE REPAIR DETAILS, SEE SHEETS X THRU X.

NO.	REVISION	DATE	BY

WEST VIRGINIA DEPARTMENT OF TRANSPORTATION
DIVISION OF HIGHWAYS
ENGINEERING DIVISION

I-64 OVER KANAWHA RIVER
EUGENE A. CARTER MEMORIAL BRIDGE +3

SUBSTRUCTURE REPAIR
ABUTMENT AE (1 OF X)

DESIGNED	DATE
ABO	08/25
DRAWN	
AFMO	08/25
CHECKED	
REVIEWED	

HDR ENGINEERING INC.
CONSULTING ENGINEERS
CHARLESTON, WV
681-341-6100

SHEET OF

BRIDGE NO. 2563.6

SNOLEN $DD-MMM-YYYY HH:MM$ pw://pwhdruseas02.intranet.hdr:HDR_US_East_02/Documents/WV_DOT/WVDOT-Eugene_Carter_Bridge_3/6.0_CAD_BIM/6.2_WIP/HDR/6.2.2_Sheet_Files/23_Structure/2.012 Substructure Repair Abutment AE (1 of x).dgn

PROJECT NUMBERS		DISTRICT	COUNTY	SHEET NO.	TOTAL
STATE	FEDERAL				
S320-64-57.44 00	NHPP-0064 (497)D	1	KANAWHA		

DETAILS UNDER DEVELOPMENT

NO.	REVISION	DATE	BY

WEST VIRGINIA DEPARTMENT OF TRANSPORTATION
DIVISION OF HIGHWAYS
ENGINEERING DIVISION

I-64 OVER KANAWHA RIVER
EUGENE A. CARTER MEMORIAL BRIDGE +3

SUBSTRUCTURE REPAIRS
ABUTMENT AE (2 OF 2)

DESIGNED	DATE
DRAWN	
CHECKED	
REVIEWED	

HDR ENGINEERING INC.
CONSULTING ENGINEERS
CHARLESTON, WV
681-341-6100

SHEET OF

BRIDGE NO. 2563.6

SNOLEN $DD-MMM-YYYY HH:MM$ pw://pwhdruseas02.intranet.hdr:HDR_US_East_02/Documents/WV_DOT/WVDOT-Eugene_Carter_Bridge_3/6.0_CAD_BIM/6.2_WIP/HDR/6.2.2_Sheet_Files/23_Structure/Reference/str_ref_bdr_Eugene Carter Memorial.dgn

PROJECT NUMBERS		DISTRICT	COUNTY	SHEET NO.	TOTAL
STATE	FEDERAL				
S320-64-57.44 00	NHPP-0064 (497)D	1	KANAWHA		

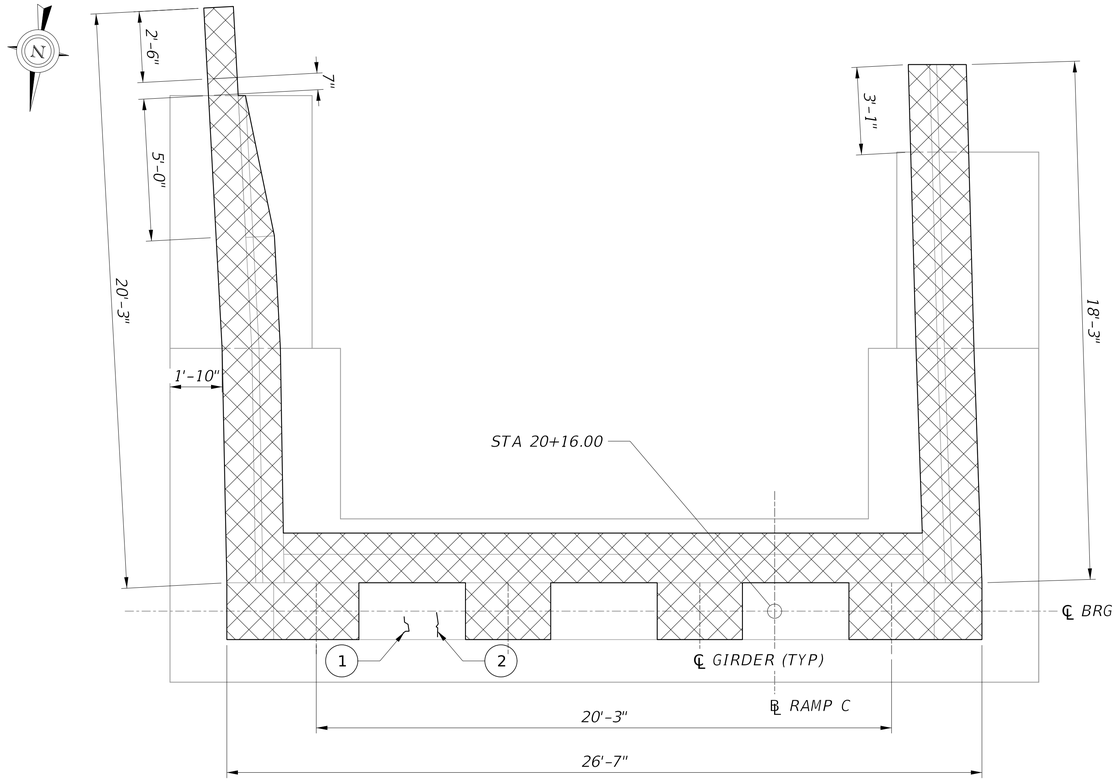

ABUTMENT C PLAN

DRAWING TITLE NOTE

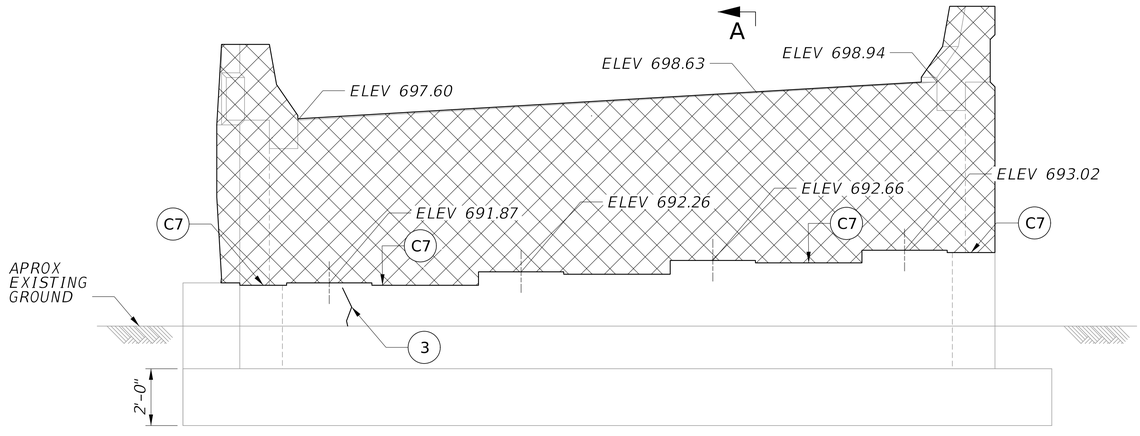

ABUTMENT C ELEVATION

DRAWING TITLE NOTE

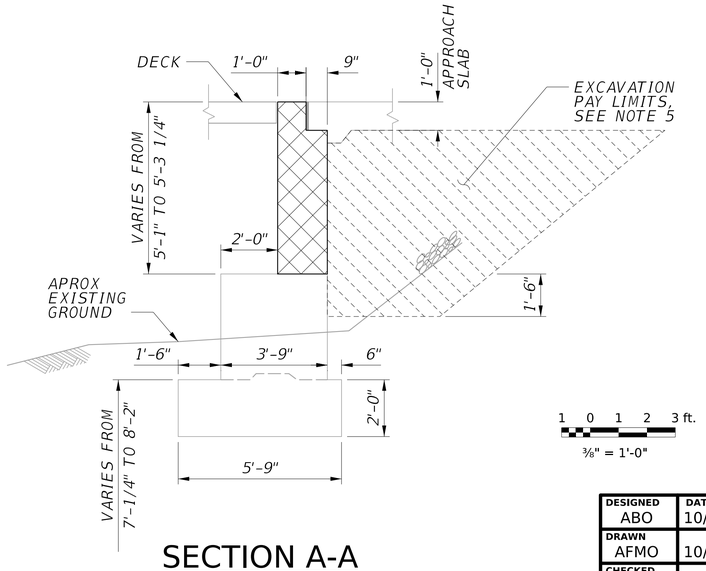

SECTION A-A

DRAWING TITLE NOTE

SUMMARY OF CONCRETE REPAIR QUANTITIES			
ID	UNIT	ESTIMATED QUANTITY	REPAIR
1	LF	1	C2
2	LF	1	C2
3	LF	2	C2
TOTAL C2 (DOCUMENTED)		4	C2
TOTAL C2 (ADJUSTED)		6	C2

C1 QUANTITY INCLUDES BOTH C1B AND C1C REPAIRS.

LEGEND:

- CONCRETE REMOVAL
- (#) REPAIR ID NUMBER
- EPOXY INJECTION CRACK REPAIR

NOTES:

1. FOR GENERAL NOTES, SEE SHEETS XX AND XX.
2. FOR ADDITIONAL DIMENSIONS AND INFORMATION, SEE EXISTING BRIDGE PLANS.
3. CLEAN ALL EXISTING WEEPHOLES THAT REMAIN AFTER DEMOLITION OF THE PORTIONS OF THE SUBSTRUCTURE UNITS AS INDICATED ON THE PLANS. PAYMENT FOR CLEANING OF WEEPHOLES IS INCIDENTAL TO ITEM 212001-000, "STRUCTURE EXCAVATION".
4. ADJUSTED REPAIR QUANTITIES TOTALS INCLUDE 30% CONTINGENCY FOR CONCRETE REPAIR DETAILS, SEE SHEETS X THRU X.
5. ADDITIONAL EXCAVATION REQUIRED FOR WINGWALL MODIFICATIONS IS INCIDENTAL TO ITEM 212001-000, STRUCTURE EXCAVATION.

NO.	REVISION	DATE	BY

WEST VIRGINIA DEPARTMENT OF TRANSPORTATION
DIVISION OF HIGHWAYS
ENGINEERING DIVISION

I-64 OVER KANAWHA RIVER
EUGENE A. CARTER MEMORIAL BRIDGE +3

SUBSTRUCTURE REPAIR ABUTMENT C (1 OF X)

DESIGNED	DATE
ABO	10/25
DRAWN	
AFMO	10/25
CHECKED	
REVIEWED	

HDR ENGINEERING INC.
CONSULTING ENGINEERS
CHARLESTON, WV
681-341-6100

SHEET OF

BRIDGE NO. 2563.6

SNOLEN $DD-MMM-YYYY HH:MM$ pw://pwhdruseas02.intranet.hdr:HDR_US_East_02/Documents/WV_DOT/WVDOT-Eugene_Carter_Bridge_3/6.0_CAD_BIM/6.2_WIP/HDR/6.2.2_Sheet_Files/23_Structure/2.021 Substructure Repair Abutment C (1 of x).dgn

PROJECT NUMBERS		DISTRICT	COUNTY	SHEET NO.	TOTAL
STATE	FEDERAL				
S320-64-57.44 00	NHPP-0064 (497)D	1	KANAWHA		

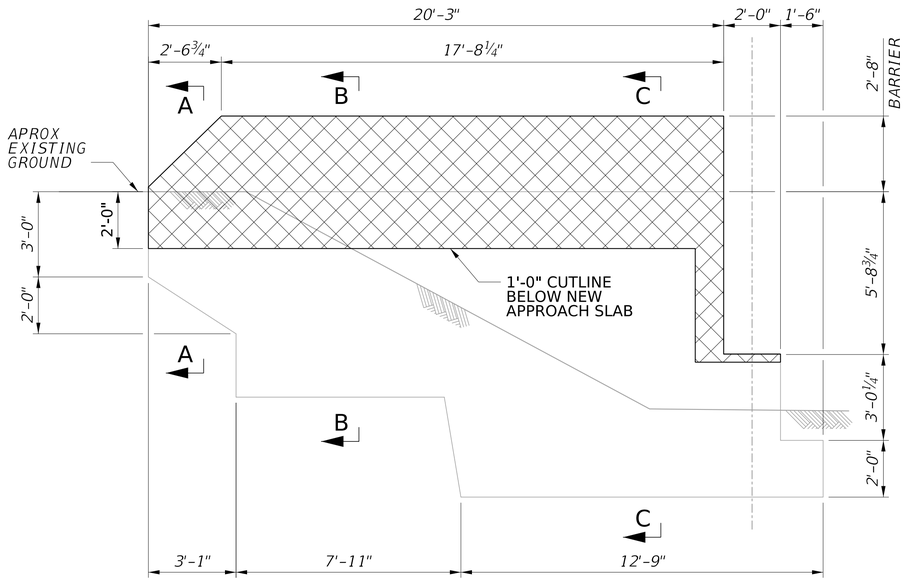

WINGWALL CA ELEVATION

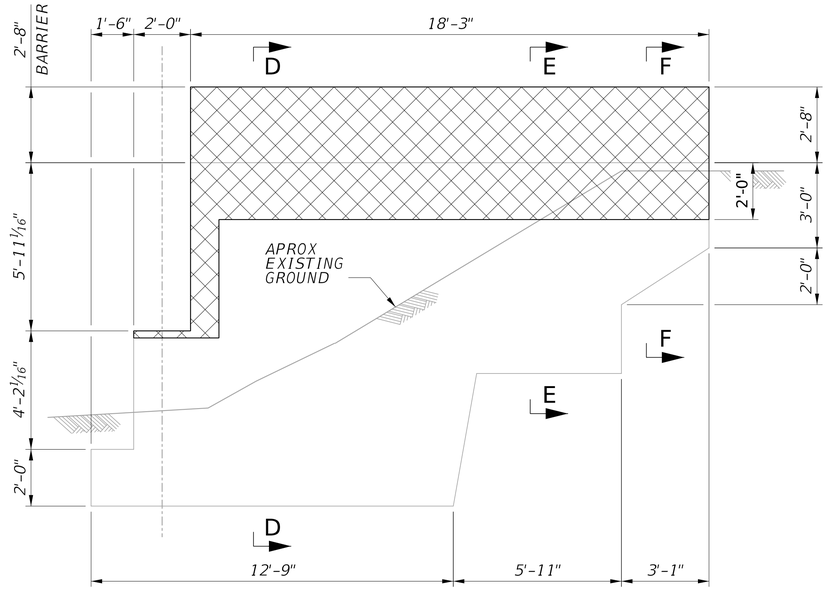

WINGWALL CB ELEVATION

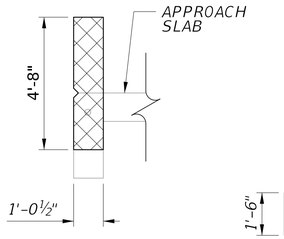

SECTION A-A

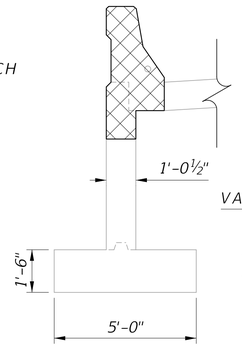

SECTION B-B

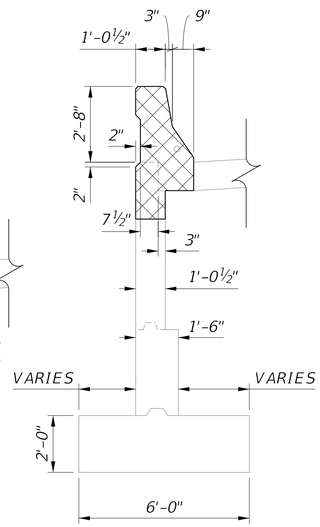

SECTION C-C

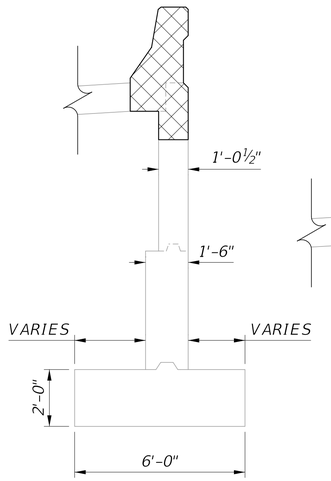

SECTION D-D

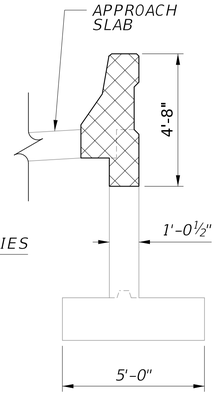

SECTION E-E

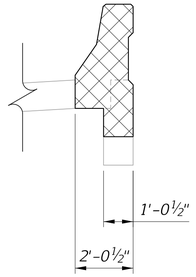

SECTION F-F

1 0 1 2 3 ft.

⅜" = 1'-0"

LEGEND:

CONCRETE REMOVAL

NOTES:

1. FOR GENERAL NOTES, SEE SHEETS XX AND XX.
2. FOR ADDITIONAL DIMENSIONS AND INFORMATION, SEE EXISTING BRIDGE PLANS.
3. CLEAN ALL EXISTING WEEPHOLES THAT REMAIN AFTER DEMOLITION OF THE PORTIONS OF THE SUBSTRUCTURE UNITS AS INDICATED ON THE PLANS. PAYMENT FOR CLEANING OF WEEPHOLES IS INCIDENTAL TO ITEM 212001-000, "STRUCTURE EXCAVATION".

NO.	REVISION	DATE	BY

WEST VIRGINIA DEPARTMENT OF TRANSPORTATION
DIVISION OF HIGHWAYS
ENGINEERING DIVISION

I-64 OVER KANAWHA RIVER
EUGENE A. CARTER MEMORIAL BRIDGE +3

SUBSTRUCTURE REPAIR ABUTMENT C (2 OF X)

DESIGNED	ABO	DATE	10/25
DRAWN	AFMO		10/25
CHECKED			
REVIEWED			

HDR ENGINEERING INC.
CONSULTING ENGINEERS
CHARLESTON, WV
681-341-6100

SHEET OF

BRIDGE NO. 2563.6

SNOLEN $DD-MMM-YYYY HH:MM$ pw://pwhdruseas02.Intranet.hdr:HDR_US_East_02/Documents/WV_DOT/WVDOT-Eugene_Carter_Bridge_3/6.0_CAD_BIM/6.2_WIP/HDR/6.2.2_Sheet_Files/23_Structure/2.022 Substructure Repair Abutment C (2 of x).dgn

PROJECT NUMBERS		DISTRICT	COUNTY	SHEET NO.	TOTAL
STATE	FEDERAL				
S320-64-57.44 00	NHPP-0064 (497)D	1	KANAWHA		

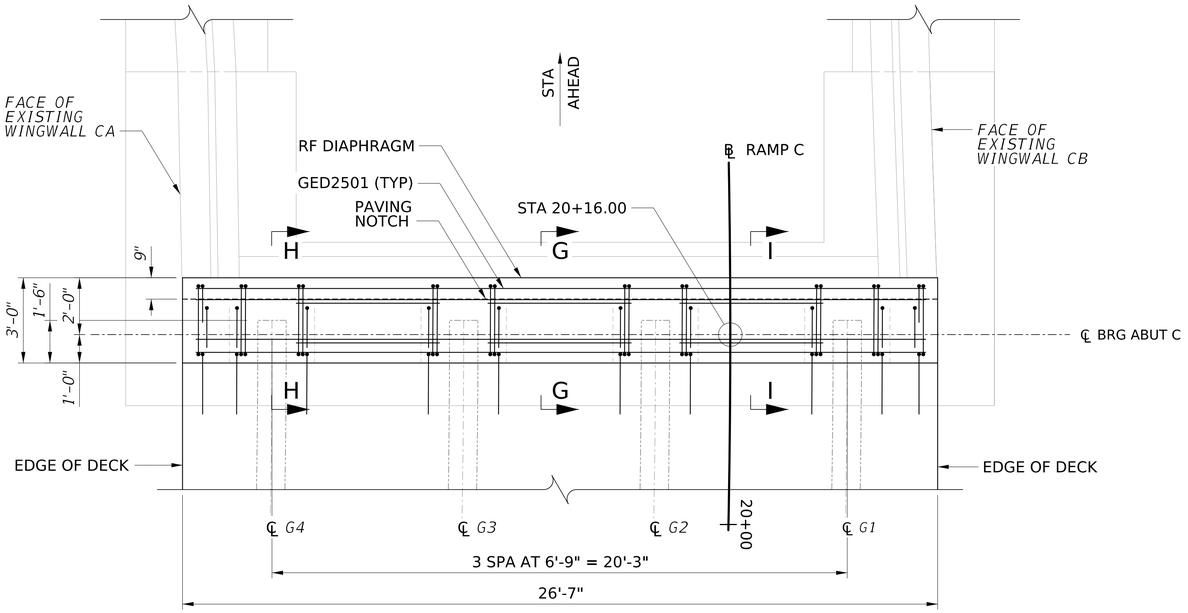

DIAPHRAGM ABUTMENT C PLAN

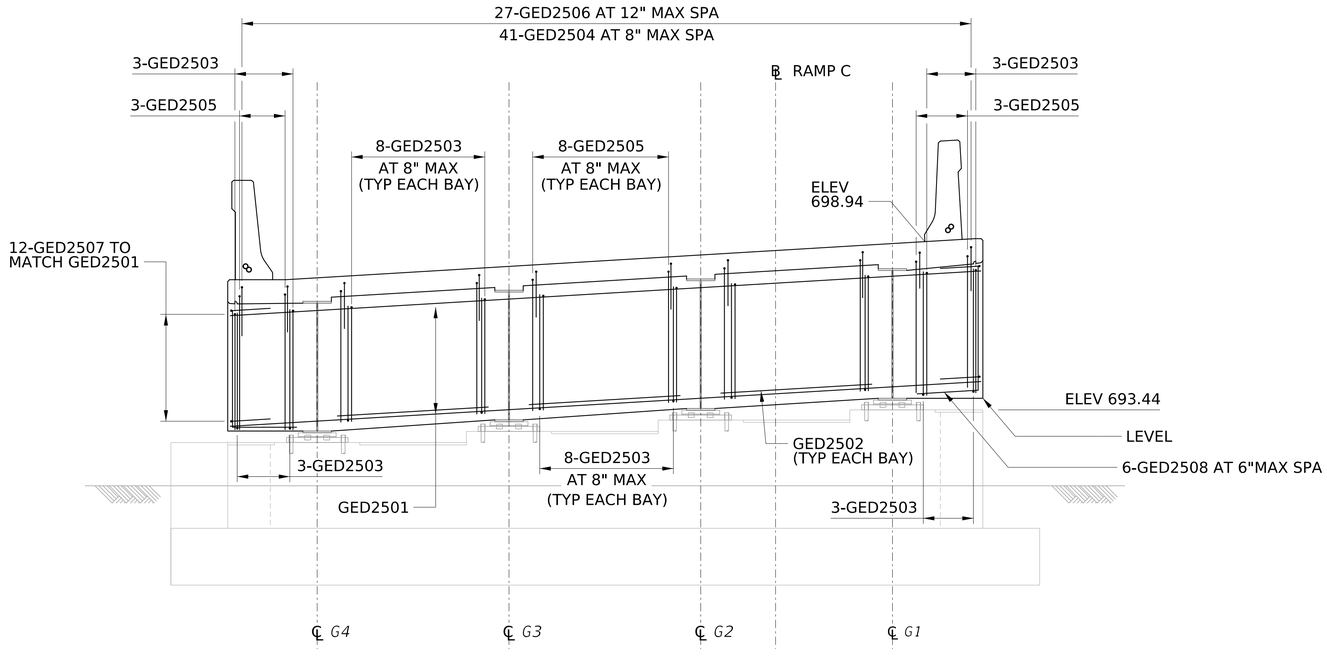

DIAPHRAGM ABUTMENT C ELEVATION

(LOOKING STATION BACK)

1 0 1 2 3 ft.

⅜" = 1'-0"

NOTES:

1. FOR GENERAL NOTES, SEE SHEETS XX AND XX.
2. FOR SECTION A-A, SEE SHEET X.
3. FOR REINFORCING SCHEDULE, SEE SHEET XX.
4. FOR ADDITIONAL DIMENSIONS AND INFORMATION, SEE EXISTING BRIDGE PLANS.
5. CLEAN ALL EXISTING WEEPHOLES THAT REMAIN AFTER DEMOLITION OF THE PORTIONS OF THE SUBSTRUCTURE UNITS AS INDICATED ON THE PLANS. PAYMENT FOR CLEANING OF WEEPHOLES IS INCIDENTAL TO ITEM 212001-000, "STRUCTURE EXCAVATION".
6. ADDITIONAL EXCAVATION REQUIRED FOR WINGWALL MODIFICATIONS IS INCIDENTAL TO ITEM 212001-000, STRUCTURE EXCAVATION.

NO.	REVISION	DATE	BY

WEST VIRGINIA DEPARTMENT OF TRANSPORTATION
DIVISION OF HIGHWAYS
ENGINEERING DIVISION

I-64 OVER KANAWHA RIVER
EUGENE A. CARTER MEMORIAL BRIDGE +3

SUBSTRUCTURE REPAIR ABUTMENT C (3 OF X)

DESIGNED	DATE
ABO	08/25
DRAWN	
AFMO	08/25
CHECKED	
REVIEWED	

HDR ENGINEERING INC.
CONSULTING ENGINEERS
CHARLESTON, WV
681-341-6100

SHEET OF

BRIDGE NO. 2563.6

SNOLEN $DD-MMM-YYYY HH:MM$ pw://pwhdruseas02.Intranet.hdr:HDR_US_East_02/Documents/WV_DOT/WVDOT-Eugene_Carter_Bridge_3/6.0_CAD_BIM/6.2_WIP/HDR/6.2.2_Sheet_Files/23_Structure/2.023 Substructure Repair Abutment C (3 of X).dgn

PROJECT NUMBERS		DISTRICT	COUNTY	SHEET NO.	TOTAL
STATE	FEDERAL				
S320-64-57.44 00	NHPP-0064 (497)D	1	KANAWHA		

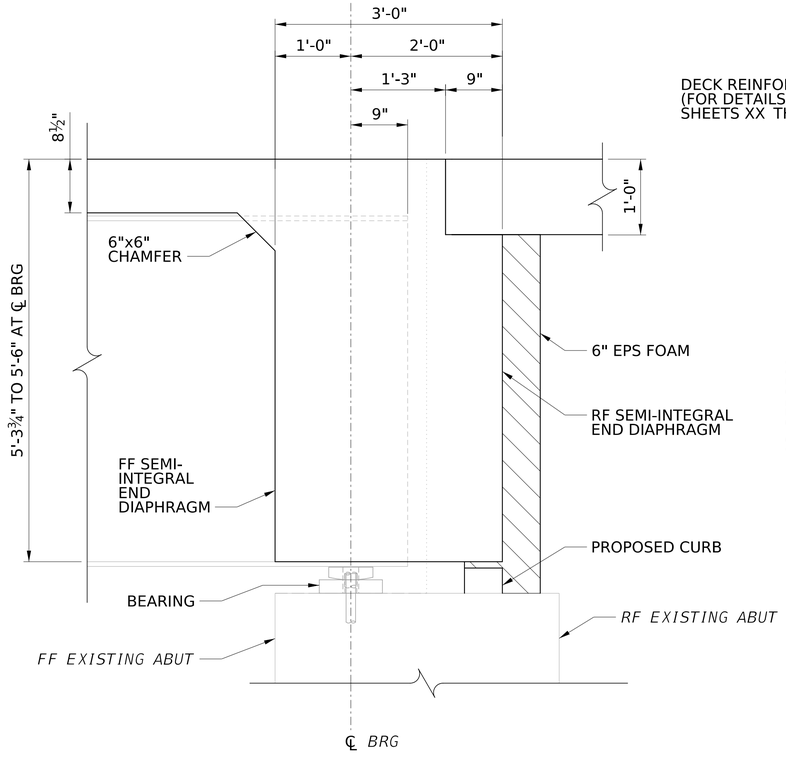

SECTION G-G

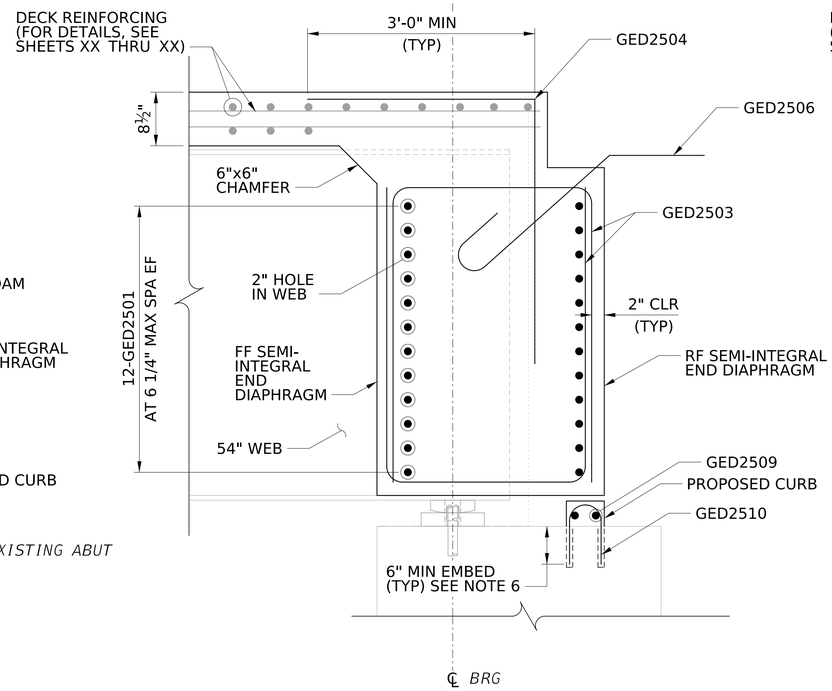

SECTION H-H

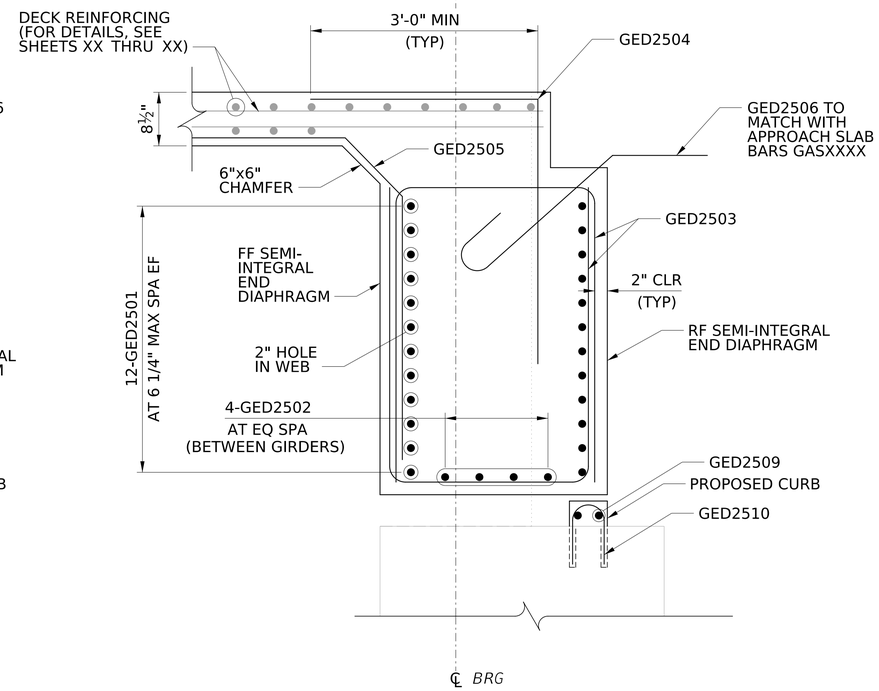

SECTION I-I

ABUTMENT 2 QUANTITIES			
ITEM NO.	DESCRIPTION	UNIT	QUANTITY
212001-000	STRUCTURE EXCAVATION	CY	X
307001-000	AGGREGATE BASE COURSE, CLASS 1	CY	X
601002-001	CLASS B CONCRETE	CY	X
601009-001	CLASS H CONCRETE	CY	X
601019-001	CONCRETE PROTECTIVE COATING, C3	SF	X
601030-000	PATCHING CONCRETE STRUCTURES, C1B	SF	X
601030-000	PATCHING CONCRETE STRUCTURES, C1C	SF	X
601031-001	EPOXY INJECTION CRACK REPAIR, C2	LF	X
601037-001	DOWEL HOLE, VARIABLE	EA	X
602002-003	GALVANIZED REINFORCING STEEL	LB	X
615028-001	GUIDED BEARING, ELASTOMERIC	EA	X
645001-001	PRIMARY REINFORCEMENT, 2,400 LBS/FT	SY	X
INCIDENTAL QUANTITY INFORMATION (TO ITEM 601002-001)			
	1" JOINT FILLER	SF	X
	2 ½" NOMINAL PREFORMED SILICONE COATED EXPANSION JOINT	LF	X

TEMPLATE

NOTES:

1. FOR GENERAL NOTES, SEE SHEETS X THRU X.
2. FOR LOCATION OF SECTIONS, G-G, H-H, AND I-I SEE SHEET XX.
3. FOR ADDITIONAL CURB DETAILS, SEE SHEET XX.
4. FOR ADDITIONAL NOTES, SEE SHEET XX.
6. USE HILTI HIT-RE EPOXY ANCHORING SYSTEM (OR APPROVED EQUAL) IN DOWEL HOLES. USE THE GREATER OF MINIMUM EMBEDMENT SHOWN ON PLANS OR IN ACCORDANCE WITH THE MANUFACTURER'S INSTRUCTIONS. PROVIDE HOLE DIAMETER IN ACCORDANCE WITH THE MANUFACTURER'S INSTRUCTIONS.

6 0 6 12 in.
1" = 1'-0"

NO.	REVISION	DATE	BY

WEST VIRGINIA DEPARTMENT OF TRANSPORTATION
DIVISION OF HIGHWAYS
ENGINEERING DIVISION

I-64 OVER KANAWHA RIVER
EUGENE A. CARTER MEMORIAL BRIDGE +3

SUBSTRUCTURE REPAIR
ABUTMENT C (4 OF X)

DESIGNED	DATE
ABO	11/25
DRAWN	
AFMO	11/25
CHECKED	
REVIEWED	

HDR ENGINEERING INC.
CONSULTING ENGINEERS
CHARLESTON, WV
681-341-6100

SHEET OF
BRIDGE NO. 2563.6

pw://pwhdruseas02.intranet.hdr:HDR_US_East_02/Documents/WV_DOT/WVDOT-Eugene_Carter_Bridge_3/6.0_CAD_BIM/6.2_WIP/HDR/6.2.2_Sheet_Files/23_Structure/2.024 Substructure Repair Abutment C (4 of X).dgn
$DD-MMM-YYYY HH:MM$
SNOLEN

PROJECT NUMBERS		DISTRICT	COUNTY	SHEET NO.	TOTAL
STATE	FEDERAL				
S320-64-57.44 00	NHPP-0064 (497)D	1	KANAWHA		

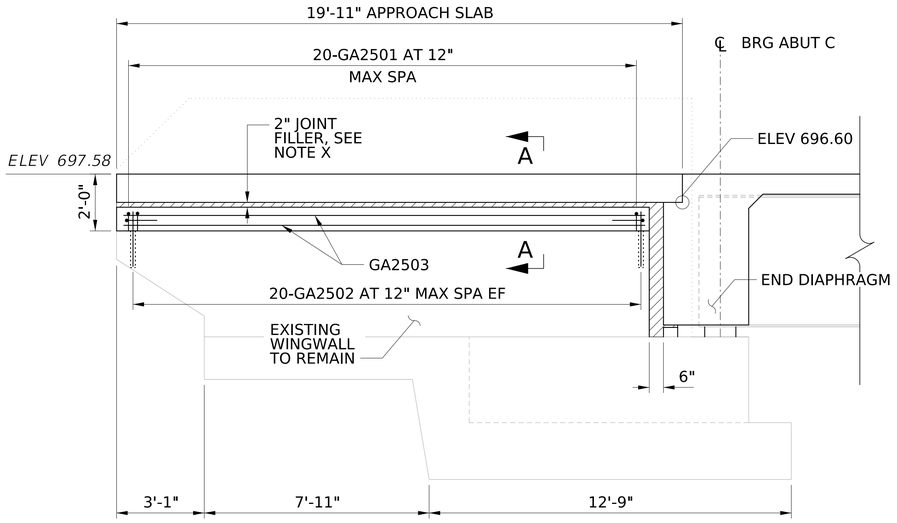

WINGWALL CA

1 0 1 2 3 ft.

⅜" = 1'-0"

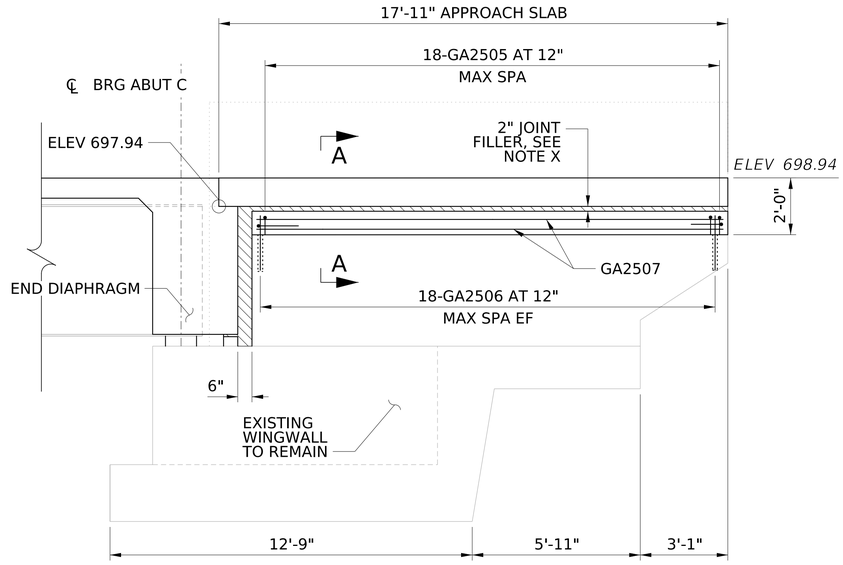

WINGWALL CB

1 0 1 2 3 ft.

⅜" = 1'-0"

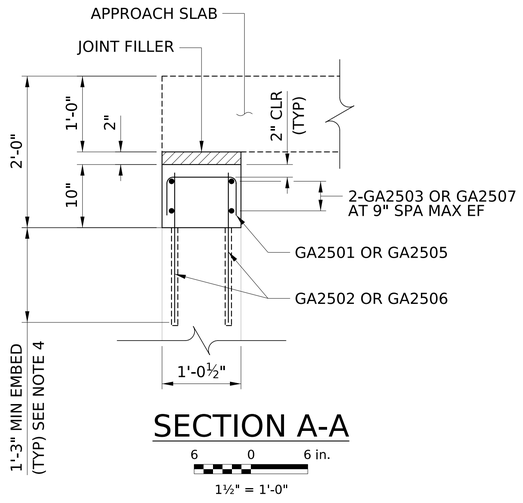

SECTION A-A

6 0 6 in.

1½" = 1'-0"

NOTES:

1. FOR GENERAL NOTES, SEE SHEETS X THRU X.
2. FOR ADDITIONAL ABUTMENT NOTES, SEE SHEET XX.
3. FOR REINFORCING SCHEDULE, SEE SHEET XX.
4. USE HILTI HIT-RE EPOXY ANCHORING SYSTEM (OR APPROVED EQUAL) IN DOWEL HOLES. USE THE GREATER OF MINIMUM EMBEDMENT SHOWN ON PLANS OR IN ACCORDANCE WITH THE MANUFACTURER'S INSTRUCTIONS. PROVIDE HOLE DIAMETER IN ACCORDANCE WITH THE MANUFACTURER'S INSTRUCTIONS.
5. FOR DETAILS OF JOINT FILLER BETWEEN REBUILT WINGWALL AND APPROACH SLAB, SEE SHEET XX.
6. FOR REINFORCEMENT OF BARRIERS MOUNTED ON WINGWALL, SEE SHEETS XX AND XX.

NO.	REVISION	DATE	BY

WEST VIRGINIA DEPARTMENT OF TRANSPORTATION
DIVISION OF HIGHWAYS
ENGINEERING DIVISION

I-64 OVER KANAWHA RIVER
EUGENE A. CARTER MEMORIAL BRIDGE +3

SUBSTRUCTURE REPAIR ABUTMENT C (5 OF X)

DESIGNED	ABO	DATE	11/25
DRAWN	AFMO		11/25
CHECKED			
REVIEWED			

HDR ENGINEERING INC.
CONSULTING ENGINEERS
CHARLESTON, WV
681-341-6100

SHEET OF

BRIDGE NO. 2563.6

SNOLEN $DD-MMM-YYYY HH:MM$ pw://pwhdruseas02.Intranet.hdr:HDR_US_East_02/Documents/WV_DOT/WVDOT-Eugene_Carter_Bridge_3/6.0_CAD_BIM/6.2_WIP/HDR/6.2.2_Sheet_Files/23_Structure/2.025 Substructure Repair Abutment C (5 of X).dgn

PROJECT NUMBERS		DISTRICT	COUNTY	SHEET NO.	TOTAL
STATE	FEDERAL				
S320-64-57.44 00	NHPP-0064 (497)D	1	KANAWHA		

PIER REINFORCEMENT SCHEDULE

MARK	SIZE	LENGTH	NO.	TYPE	A	B	C	D	E	F	G	H	J	K	R	REMARKS
Abutment C																
GED2501	5	26'-3	38	STR												
GED2502	5	6'-5	12	STR												
GED2503	5	10'-8	60	12	4'-0	2'-8	4'-0									
GED2504	5	8'-0	41	10	5'-0	3'-0										
GED2505	5	7'-0	30	54	2'-0	1'-2	3'-10							10"		
GED2506	5	4'-11	27	64	1'-11	2'-5					7"	1'-8 ½	5"			
GED2507	5	6'-8	38	12	2'-0	2'-8	2'-0									
GED2508	5	6'-4	12	10	3'-10	2'-6										
GED2509	5	26'-3	4	STR												
GED2510	5	11"	37	12	3"	5"	3"									
GED2511	5	1'-3	74	STR												EMBED IN EXISTING CONCRETE
GA2501	5	1'-8	20	12	6"	8"	6"									
GA2502	5	1'-11	40	STR												
GA2503	5	18'-3	4	STR												
GA2505	5	1'-8	18	12	6"	8"	6"									
GA2506	5	1'-11	36	STR												
GA2507	5	16'-3	4	STR												

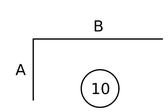

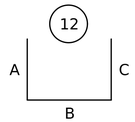

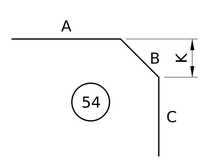

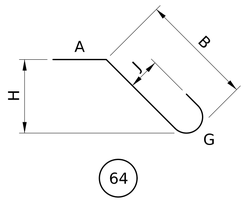

NO.	REVISION	DATE	BY

WEST VIRGINIA DEPARTMENT OF TRANSPORTATION
DIVISION OF HIGHWAYS
ENGINEERING DIVISION

I-64 OVER KANAWHA RIVER
EUGENE A. CARTER MEMORIAL BRIDGE +3

SUBSTRUCTURE REPAIR
ABUTMENT C (6 OF X)

DESIGNED	DATE
ABO	11/25
DRAWN	
AFMO	11/25
CHECKED	
REVIEWED	

HDR ENGINEERING INC.
CONSULTING ENGINEERS
CHARLESTON, WV
681-341-6100

SHEET OF

BRIDGE NO. 2563.6

SNOLEN $DD-MMM-YYYY HH:MM$ pw://pwhdruseas02.intranet.hdr:HDR_US_East_02/Documents/WV_DOT/WVDOT-Eugene_Carter_Bridge_3/6.0_CAD_BIM/6.2_WIP/HDR/6.2.2_Sheet_Files/23_Structure/2.026 Substructure Repair Abutment C (6 of X).dgn

PROJECT NUMBERS		DISTRICT	COUNTY	SHEET NO.	TOTAL
STATE	FEDERAL				
S320-64-57.44 00	NHPP-0064 (497)D	1	KANAWHA		

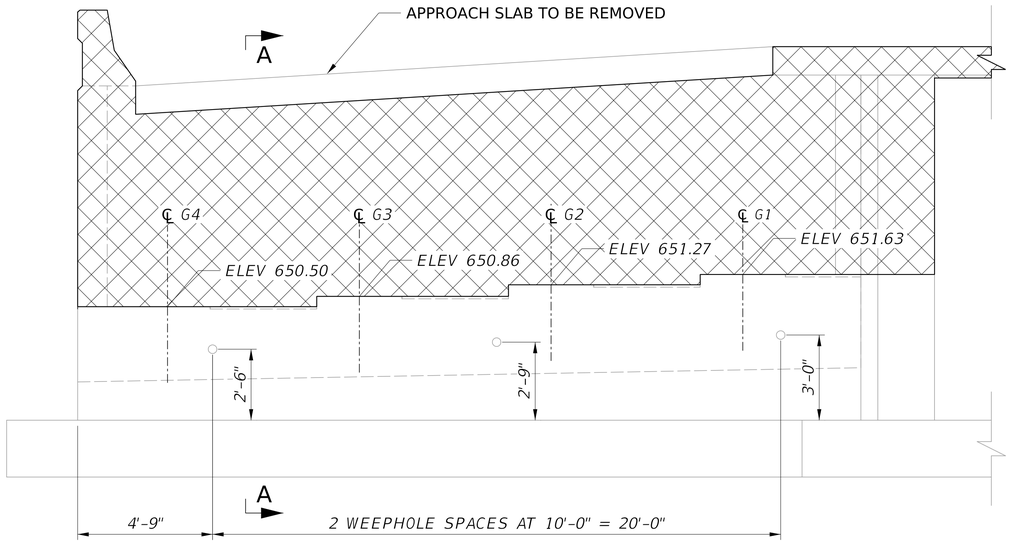

ABUTMENT D ELEVATION

(LOOKING STATION BACK)

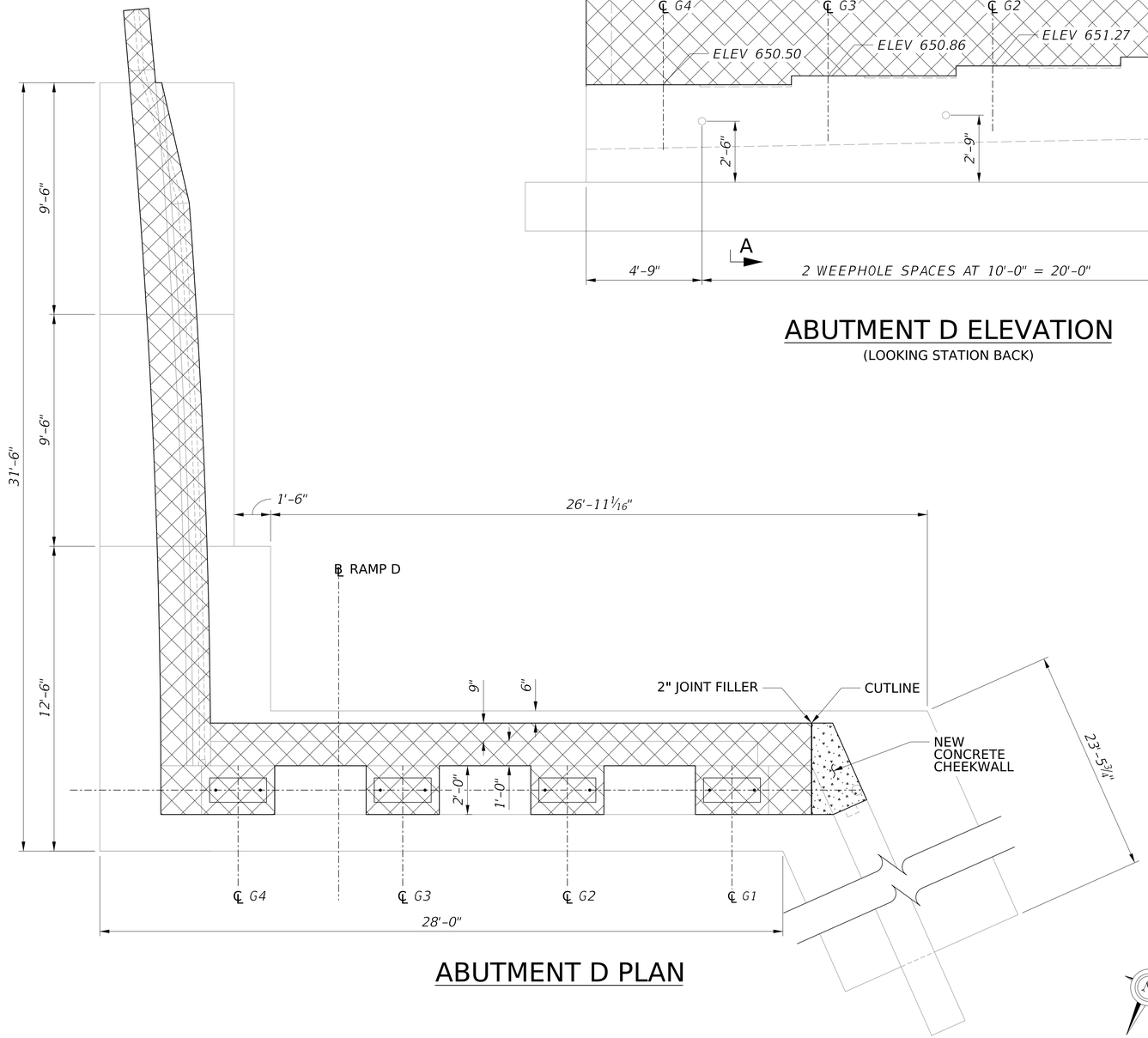

ABUTMENT D PLAN

1 0 1 2 3 ft.

3/8" = 1'-0"

CONCRETE REMOVAL NOTES:

1. EXISTING CONCRETE IS TO BE SAWCUT AT THE CUTLINES INDICATED IN THE PLANS.
2. A 1" DEEP SAWCUT SHALL BE MADE AROUND THE PERIMETER OF THE CONCRETE TO BE REMOVED AT THE LOCATIONS SHOWN ON THE PLANS. ELEVATIONS SHOWN ARE FROM EXISTING PLANS CONVERTED TO THE NAVD88 DATUM. ELEVATIONS ENCOUNTERED IN THE FIELD MAY VARY FROM VALUES SHOWN
3. PNEUMATIC HAMMERS WITH IMPACT RATINGS OF 30 FT/LBS OR LESS MAY BE USED IF REQUIRED.
4. CLEAN EXISTING CONCRETE IN ACCORDANCE WITH THE MANUFACTURERS RECOMMENDATIONS PRIOR TO PLACING THE EPOXY BONDING COMPOUND.
5. PRIOR TO PLACING THE NEW CONCRETE, COAT THE SURFACE OF THE EXISTING CONCRETE WHICH WILL BE IN CONTACT WITH NEW CONCRETE WITH THE EPOXY BONDING COMPOUND.
6. COST OF CLEANING EXISTING CONCRETE AND EPOXY BONDING COMPOUND IS INCIDENTAL TO THE UNIT PRICE FOR THE CLASS OF CONCRETE BEING PLACED.

LEGEND:

CONCRETE REMOVAL

NOTES:

1. FOR GENERAL NOTES, SEE SHEETS $GPND1$ & $GPE13$
2. FOR SECTION A-A, SEE SHEET $ABUTD02$
3. FOR ADDITIONAL DIMENSIONS AND INFORMATION, SEE EXISTING BRIDGE PLANS.
4. CLEAN ALL EXISTING WEEPHOLES THAT REMAIN AFTER DEMOLITION OF THE PORTIONS OF THE SUBSTRUCTURE UNITS AS INDICATED ON THE PLANS. PAYMENT FOR CLEANING OF WEEPHOLES IS INCIDENTAL TO ITEM 212001-000, "STRUCTURE EXCAVATION".
5. ADDITIONAL EXCAVATION REQUIRED FOR WINGWALL MODIFICATIONS IS INCIDENTAL TO ITEM 212001-000, STRUCTURE EXCAVATION.
6. ADJUSTED REPAIR QUANTITIES TOTALS INCLUDE 30% CONTINGENCY FOR CONCRETE REPAIR DETAILS, SEE SHEETS X THRU X.

NO.	REVISION	DATE	BY

WEST VIRGINIA DEPARTMENT OF TRANSPORTATION
DIVISION OF HIGHWAYS
ENGINEERING DIVISION

I-64 OVER KANAWHA RIVER
EUGENE A. CARTER MEMORIAL BRIDGE +3

SUBSTRUCTURE REPAIR ABUTMENT D (1 OF X)

DESIGNED	DATE
ABO	08/25
DRAWN	
AFMO	08/25
CHECKED	
REVIEWED	

HDR ENGINEERING INC.
CONSULTING ENGINEERS
CHARLESTON, WV
681-341-6100

SHEET OF

BRIDGE NO. 2563.6

SNOLEN $DD-MMM-YYYY HH:MM$ pw://pwhdruseas02.intranet.hdr:HDR_US_East_02/Documents/WV_DOT/WVDOT-Eugene_Carter_Bridge_3/6.0_CAD_BIM/6.2_WIP/HDR/6.2.2_Sheet_Files/23_Structure/2.030 Substructure Repair Abutment D (1 of x).dgn

PROJECT NUMBERS		DISTRICT	COUNTY	SHEET NO.	TOTAL
STATE	FEDERAL				
S320-64-57.44 00	NHPP-0064 (497)D	1	KANAWHA		

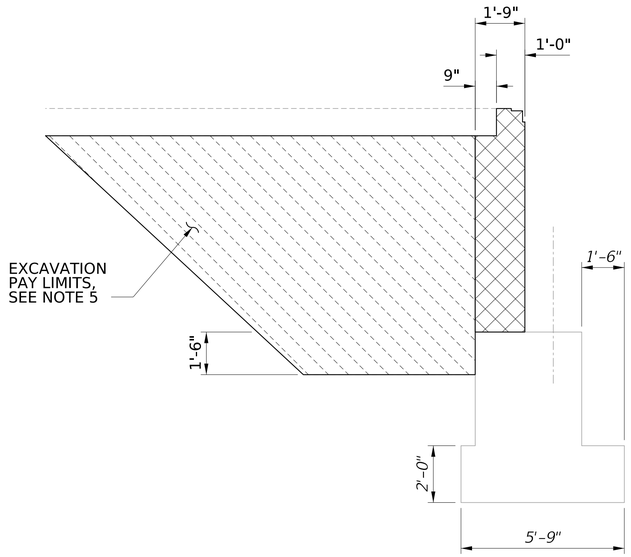

SECTION A-A

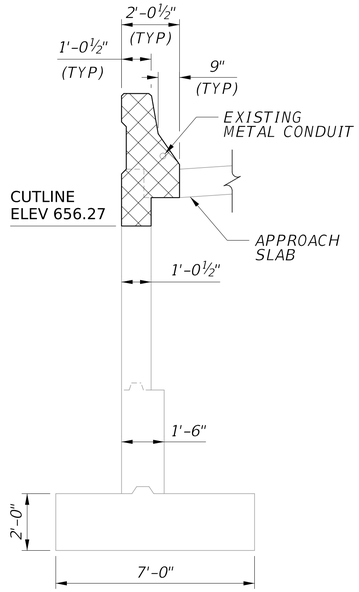

SECTION C-C

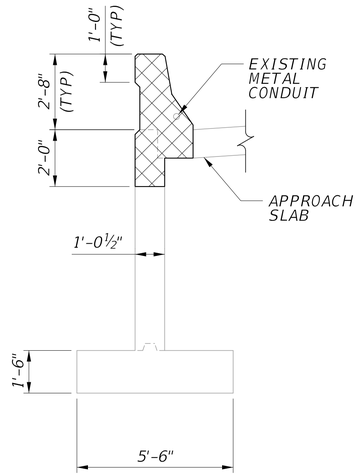

SECTION D-D

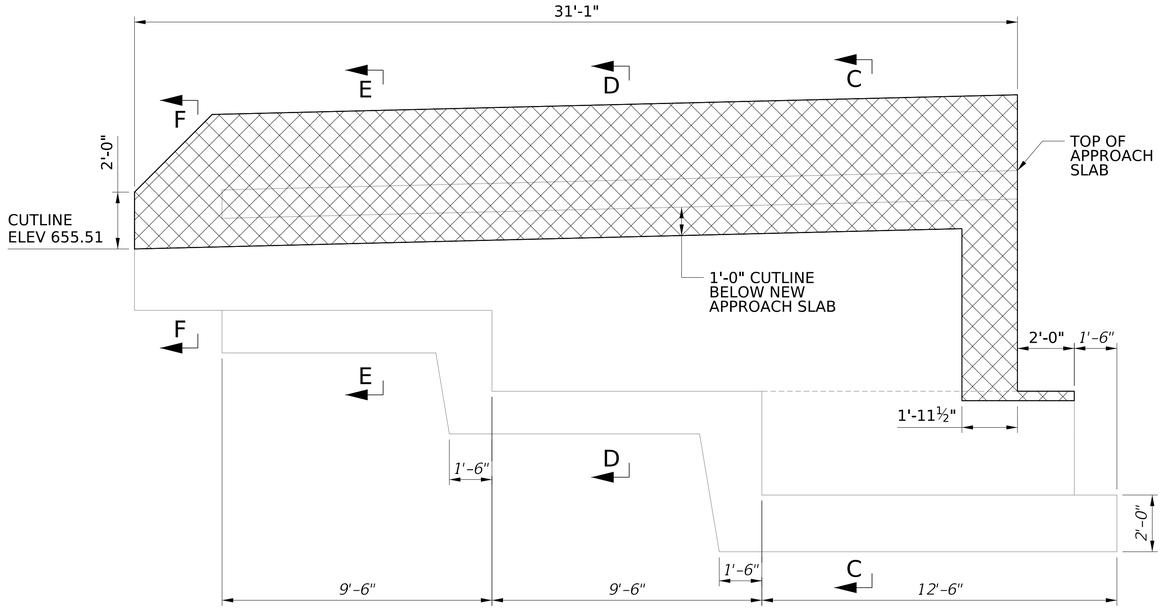

WING DA ELEVATION

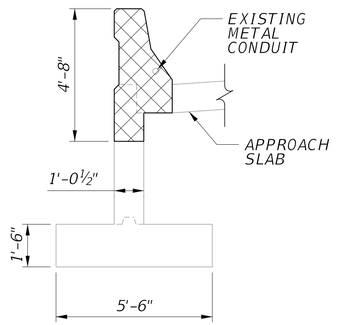

SECTION E-E

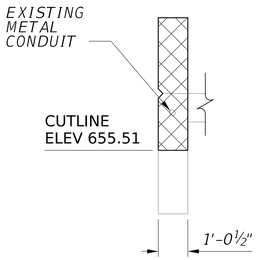

SECTION F-F

LEGEND:

CONCRETE REMOVAL

NOTES:

1. FOR GENERAL NOTES, SEE SHEETS $GPE01$ AND $GPE13$
2. FOR LOCATION OF SECTION A-A SEE SHEET XX.
3. FOR ADDITIONAL DIMENSIONS AND INFORMATION, SEE EXISTING BRIDGE PLANS.
4. ADDITIONAL EXCAVATION REQUIRED FOR WINGWALL MODIFICATIONS IS INCIDENTAL TO ITEM 212001-000, STRUCTURE EXCAVATION.
5. ADJUSTED REPAIR QUANTITIES TOTALS INCLUDE 30% CONTINGENCY FOR CONCRETE REPAIR DETAILS, SEE SHEETS X THRU X.

1 0 1 2 3 ft.

⅜" = 1'-0"

NO.	REVISION	DATE	BY

WEST VIRGINIA DEPARTMENT OF TRANSPORTATION
DIVISION OF HIGHWAYS
ENGINEERING DIVISION

I-64 OVER KANAWHA RIVER
EUGENE A. CARTER MEMORIAL BRIDGE +3

SUBSTRUCTURE REPAIR ABUTMENT D (2 OF X)

DESIGNED	DATE
ABO	08/25
DRAWN	
AFMO	08/25
CHECKED	
REVIEWED	

HDR ENGINEERING INC.
CONSULTING ENGINEERS
CHARLESTON, WV
681-341-6100

SHEET OF

BRIDGE NO. 2563.6

SNOLEN $DD-MMM-YYYY HH:MM$ pw://pwhdruseas02.intranet.hdr:HDR_US_East_02/Documents/WV_DOT/WVDOT-Eugene_Carter_Bridge_3/6.0_CAD_BIM/6.2_WIP/HDR/6.2.2_Sheet_Files/23_Structure/2.031 Substructure Repair Abutment D (2 of x).dgn

PROJECT NUMBERS		DISTRICT	COUNTY	SHEET NO.	TOTAL
STATE	FEDERAL				
S320-64-57.44 00	NHPP-0064 (497)D	1	KANAWHA		

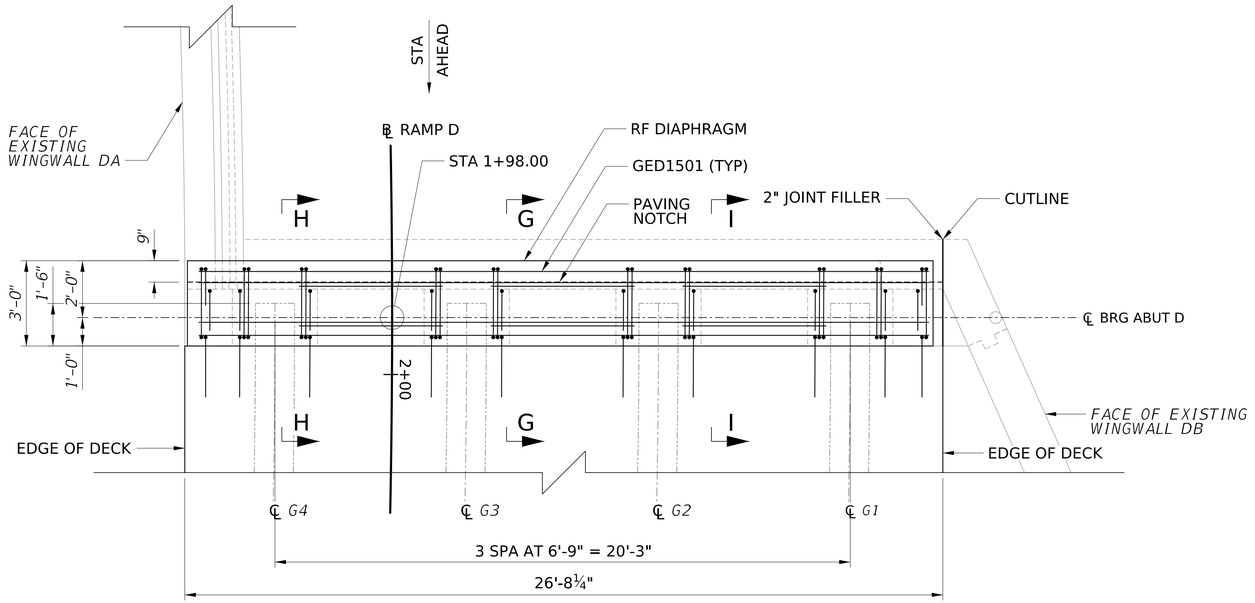

DIAPHRAGM ABUTMENT D PLAN

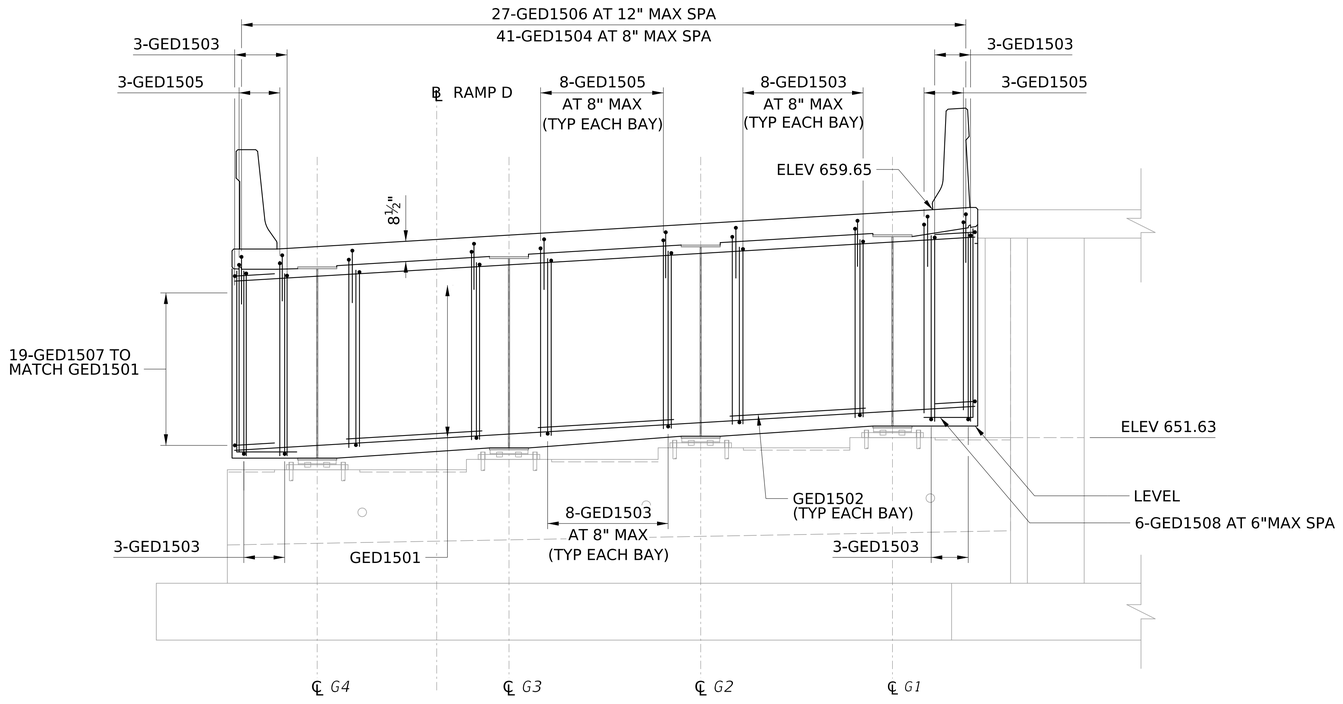

DIAPHRAGM ABUTMENT D ELEVATION

(LOOKING STATION BACK)

1 0 1 2 3 ft.

⅜" = 1'-0"

NOTES:

1. FOR GENERAL NOTES, SEE SHEETS XX AND XX.
2. FOR REINFORCING SCHEDULE, SEE SHEET XX.
3. CLEAN ALL EXISTING WEEPHOLES THAT REMAIN AFTER DEMOLITION OF THE PORTIONS OF THE SUBSTRUCTURE UNITS AS INDICATED ON THE PLANS. PAYMENT FOR CLEANING OF WEEPHOLES IS INCIDENTAL TO ITEM 212001-000, "STRUCTURE EXCAVATION".
4. ADDITIONAL EXCAVATION REQUIRED FOR WINGWALL MODIFICATIONS IS INCIDENTAL TO ITEM 212001-000, STRUCTURE EXCAVATION.

NO.	REVISION	DATE	BY

WEST VIRGINIA DEPARTMENT OF TRANSPORTATION
DIVISION OF HIGHWAYS
ENGINEERING DIVISION

I-64 OVER KANAWHA RIVER
EUGENE A. CARTER MEMORIAL BRIDGE +3

SUBSTRUCTURE REPAIR ABUTMENT D (3 OF X)

DESIGNED	ABO	08/25
DRAWN	AFMO	08/25
CHECKED		
REVIEWED		

HDR ENGINEERING INC.
CONSULTING ENGINEERS
CHARLESTON, WV
681-341-6100

SHEET OF

BRIDGE NO. 2563.6

SNOLEN $DD-MMM-YYYY HH:MM$ pw://pwhdruseas02.intranet.hdr:HDR_US_East_02/Documents/WV_DOT/WVDOT-Eugene_Carter_Bridge_3/6.0_CAD_BIM/6.2_WIP/HDR/6.2.2_Sheet_Files/23_Structure/2.033 Substructure Repair Abutment D (3 of X).dgn

PROJECT NUMBERS		DISTRICT	COUNTY	SHEET NO.	TOTAL
STATE	FEDERAL				
S320-64-57.44 00	NHPP-0064 (497)D	1	KANAWHA		

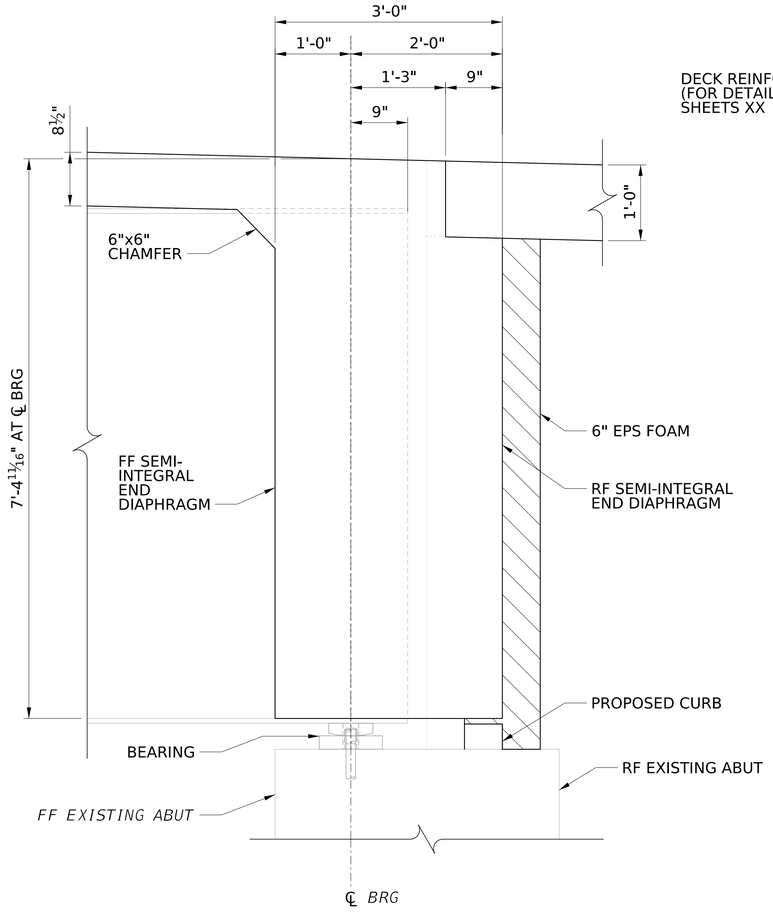

SECTION G-G

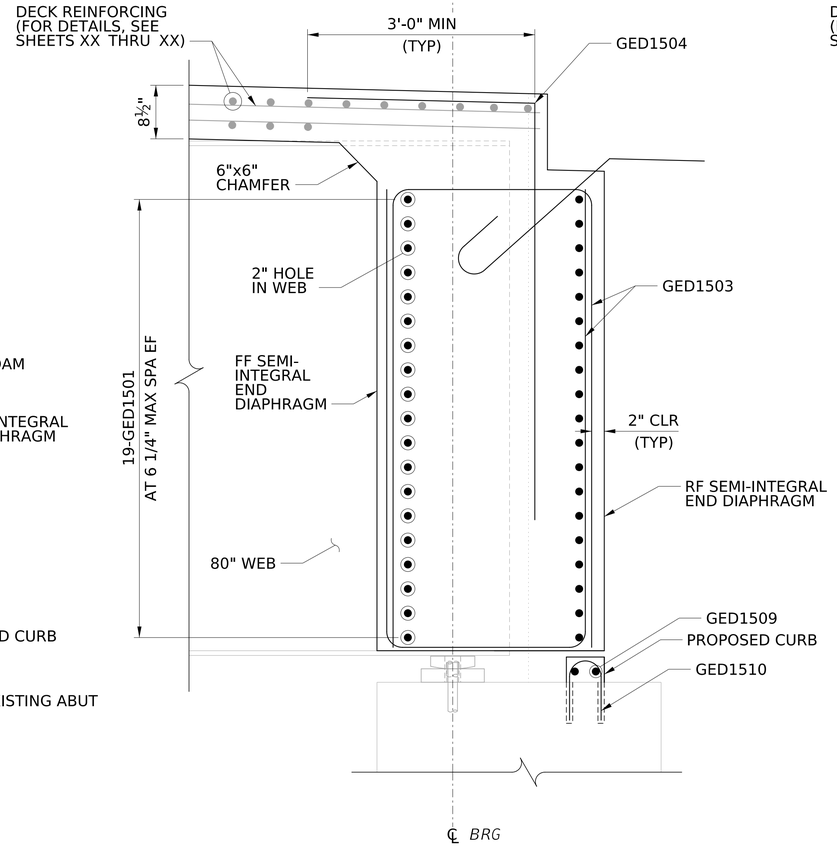

SECTION H-H

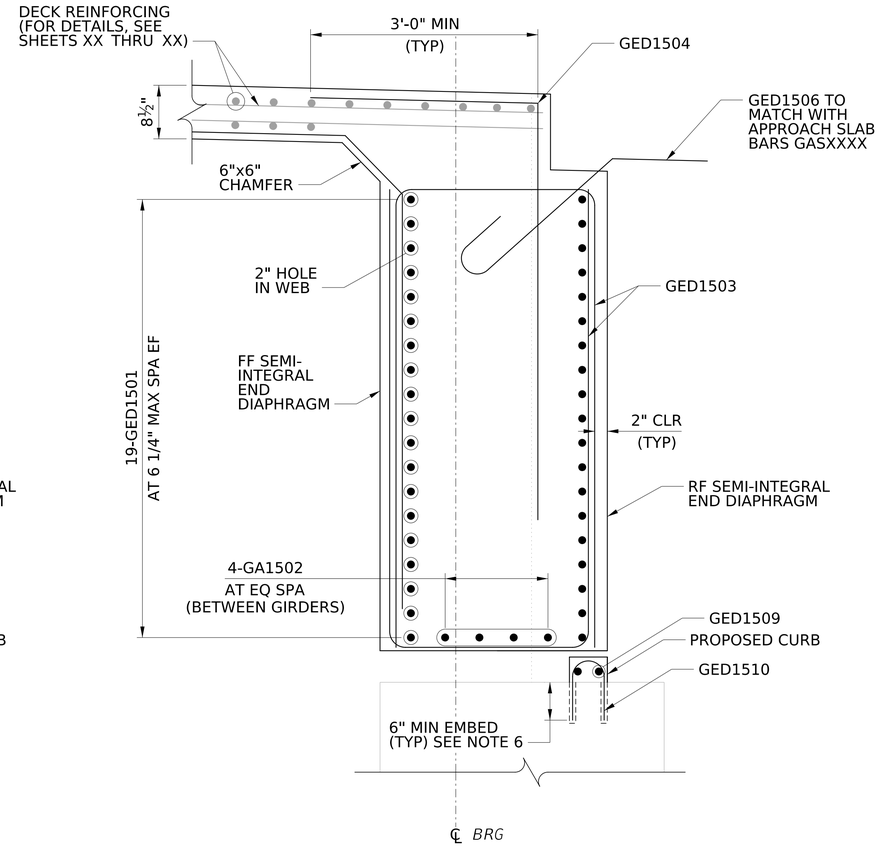

SECTION I-I

ABUTMENT 2 QUANTITIES			
ITEM NO.	DESCRIPTION	UNIT	QUANTITY
212001-000	STRUCTURE EXCAVATION	CY	X
307001-000	AGGREGATE BASE COURSE, CLASS 1	CY	X
601002-001	CLASS B CONCRETE	CY	X
601009-001	CLASS H CONCRETE	CY	X
601019-001	CONCRETE PROTECTIVE COATING, C3	SF	X
601030-000	PATCHING CONCRETE STRUCTURES, C1B	SF	X
601030-000	PATCHING CONCRETE STRUCTURES, C1C	SF	X
601031-001	EPOXY INJECTION CRACK REPAIR, C2	LF	X
601037-001	DOWEL HOLE, VARIABLE	EA	X
602002-003	GALVANIZED REINFORCING STEEL	LB	X
615028-001	GUIDED BEARING, ELASTOMERIC	EA	X
645001-001	PRIMARY REINFORCEMENT, 2,400 LBS/FT	SY	X
INCIDENTAL QUANTITY INFORMATION (TO ITEM 601002-001)			
	1" JOINT FILLER	SF	X
	2 ½" NOMINAL PREFORMED SILICONE COATED EXPANSION JOINT	LF	X

TEMPLATE

NOTES:

1. FOR GENERAL NOTES, SEE SHEETS X THRU X.
2. FOR LOCATION OF SECTIONS, G-G, H-H, AND I-I SEE SHEET XX.
3. FOR ADDITIONAL CURB DETAILS, SEE SHEET XX.
4. FOR ADDITIONAL NOTES, SEE SHEET XX.
6. USE HILTI HIT-RE EPOXY ANCHORING SYSTEM (OR APPROVED EQUAL) IN DOWEL HOLES. USE THE GREATER OF MINIMUM EMBEDMENT SHOWN ON PLANS OR IN ACCORDANCE WITH THE MANUFACTURER'S INSTRUCTIONS. PROVIDE HOLE DIAMETER IN ACCORDANCE WITH THE MANUFACTURER'S INSTRUCTIONS.

6 0 6 12 in.
1" = 1'-0"

NO.	REVISION	DATE	BY

WEST VIRGINIA DEPARTMENT OF TRANSPORTATION
DIVISION OF HIGHWAYS
ENGINEERING DIVISION

I-64 OVER KANAWHA RIVER
EUGENE A. CARTER MEMORIAL BRIDGE +3

SUBSTRUCTURE REPAIR ABUTMENT D (4 OF X)

DESIGNED	DATE
ABO	11/25
DRAWN	
AFMO	11/25
CHECKED	
REVIEWED	

HDR ENGINEERING INC.
CONSULTING ENGINEERS
CHARLESTON, WV
681-341-6100

SHEET OF
BRIDGE NO. 2563.6

pw://pwhdruseas02.intranet.hdr:HDR_US_East_02/Documents/WV_DOT/WVDOT-Eugene_Carter_Bridge_3/6.0_CAD_BIM/6.2_WIP/HDR/6.2.2_Sheet_Files/23_Structure/2.034 Substructure Repair Abutment D (4 of X).dgn
$DD-MMM-YYYY HH:MM$
SNOLEN

PROJECT NUMBERS		DISTRICT	COUNTY	SHEET NO.	TOTAL
STATE	FEDERAL				
S320-64-57.44 00	NHPP-0064 (497)D	1	KANAWHA		

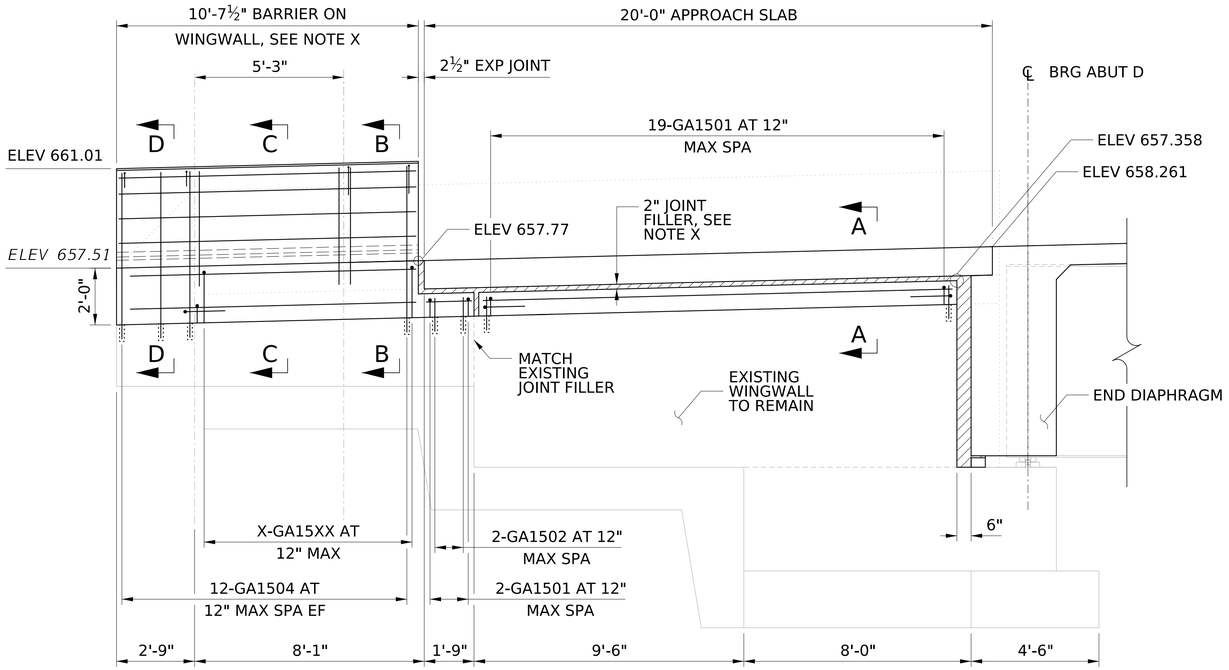

WINGWALL DA

1 0 1 2 3 ft.

⅜" = 1'-0"

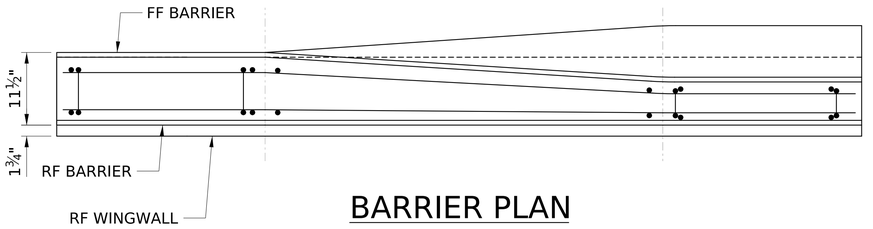

BARRIER PLAN

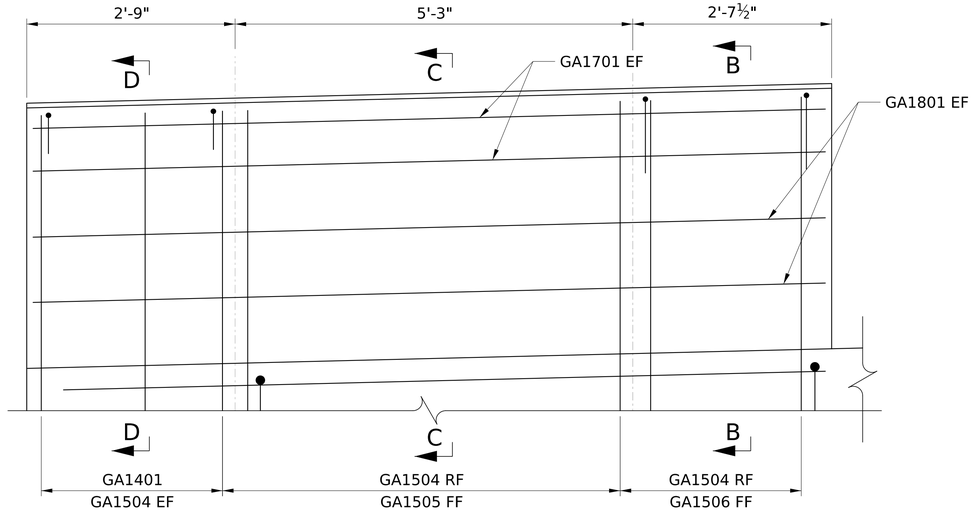

BARRIER ELEVATION

FRONT FACE

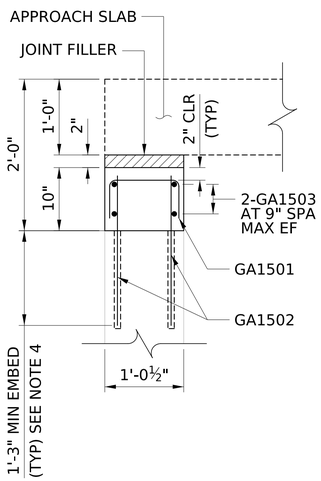

SECTION A-A

6 0 6 in.

1½" = 1'-0"

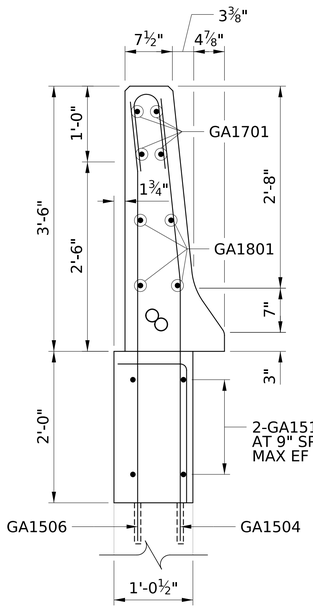

SECTION B-B

6 0 6 in.

1½" = 1'-0"

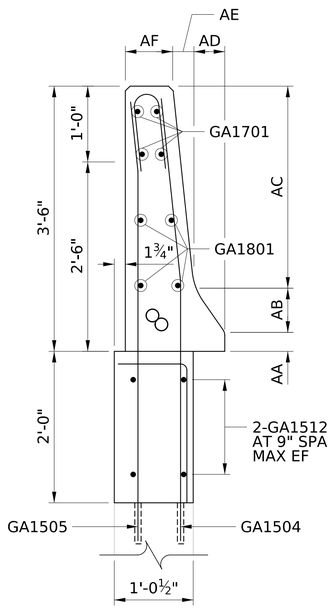

SECTION C-C

6 0 6 in.

1½" = 1'-0"

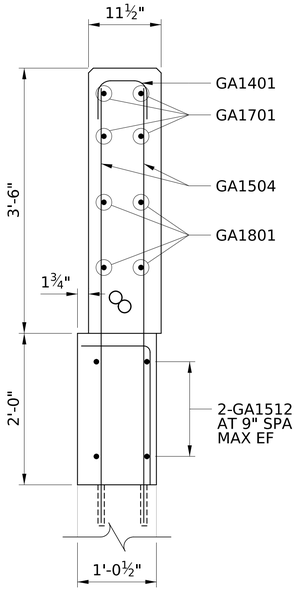

SECTION D-D

6 0 6 in.

1½" = 1'-0"

BARRIER DIMENSIONS	
CODE	DIMENSIONS IN SECTION B-B
AA	VARIES FROM 0'-3" TO 0'-0"
AB	VARIES FROM 0'-7" TO 0'-0"
AC	VARIES FROM 2'-8" TO 3'-6"
AD	VARIES FROM 0'-4⅞" TO 0'-0"
AE	VARIES FROM 0'-3⅜" TO 0'-0"
AF	VARIES FROM 0'-9" TO 0'-11½"

NOTES:

1. FOR GENERAL NOTES, SEE SHEETS X THRU X.
2. FOR ADDITIONAL ABUTMENT NOTES, SEE SHEET XX.
3. FOR REINFORCING SCHEDULE, SEE SHEET XX.
4. USE HILTI HIT-RE EPOXY ANCHORING SYSTEM (OR APPROVED EQUAL) IN DOWEL HOLES. USE THE GREATER OF MINIMUM EMBEDMENT SHOWN ON PLANS OR IN ACCORDANCE WITH THE MANUFACTURER'S INSTRUCTIONS. PROVIDE HOLE DIAMETER IN ACCORDANCE WITH THE MANUFACTURER'S INSTRUCTIONS.
5. FOR DETAILS OF JOINT FILLER BETWEEN REBUILT WINGWALL AND APPROACH SLAB, SEE SHEET XX.
6. FOR REINFORCEMENT OF BARRIERS MOUNTED ON WINGWALL, SEE SHEETS XX AND XX.

NO.	REVISION	DATE	BY

WEST VIRGINIA DEPARTMENT OF TRANSPORTATION
DIVISION OF HIGHWAYS
ENGINEERING DIVISION

I-64 OVER KANAWHA RIVER
EUGENE A. CARTER MEMORIAL BRIDGE +3
SUBSTRUCTURE REPAIR
ABUTMENT D (5 OF X)

DESIGNED	DATE
ABO	08/25
DRAWN	
AFMO	08/25
CHECKED	
REVIEWED	

HDR ENGINEERING INC.
CONSULTING ENGINEERS
CHARLESTON, WV
681-341-6100

SHEET OF

BRIDGE NO. 2563.6

pw://pwhdruseas02.intranet.hdr:HDR_US_East_02/Documents/WV_DOT/WVDOT-Eugene_Carter_Bridge_3/6.0_CAD_BIM/6.2_WIP/HDR/6.2.2_Sheet_Files/23_Structure/2.035 Substructure Repair Abutment D (5 of X).dgn
$DD-MMM-YYYY HH:MM$
SNOLEN

PROJECT NUMBERS		DISTRICT	COUNTY	SHEET NO.	TOTAL
STATE	FEDERAL				
S320-64-57.44 00	NHPP-0064 (497)D	1	KANAWHA		

PIER REINFORCEMENT SCHEDULE

MARK	SIZE	LENGTH	NO.	TYPE	A	B	C	D	E	F	G	H	J	K	R	REMARKS
Abutment D																
GED1501	5	26'-4	38	STR												
GED1502	5	6'-5	12	STR												
GED1503	5	15'-0	60	12	6'-2	2'-8	6'-2									
GED1504	5	10'-2	41	10	7'-2	3'-0										
GED1505	5	9'-2	30	54	2'-0	1'-2	6'-0							10"		
GED1506	5	4'-11	27	64	1'-11	2'-5					7"	1'-8 ½	5"			
GED1507	5	6'-8	38	12	2'-0	2'-8	2'-0									
GED1508	5	8'-6	12	10	6'-0	2'-6										
GED1509	5	26'-4	4	STR												
GED1510	5	11"	37	12	3"	5"	3"									
GED1511	5	1'-3	74	STR												EMBED IN EXISTING CONCRETE
GA1501	5	1'-8	23	12	6"	8"	6"									
GA1502	5	2'-0	46	STR												
GA1503	5	21'-0	4	STR												
GA1504	5	5'-4	23	STR												
GA1505	5	VARIES 5'-6 TO 5'-6	7	88	2'-1	8 ½"	2'-8									
GA1506	5	5'-6	4	88	2'-1	8 ½"	2'-8									
GA1401	4	1'-6	12	12	6"	6"	6"									
GA1701	7	10'-4	4	STR												
GA1801	8	10'-4	4	STR												

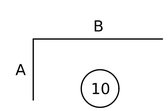

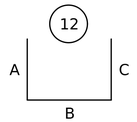

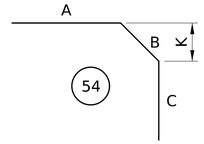

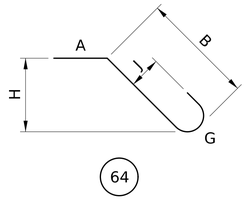

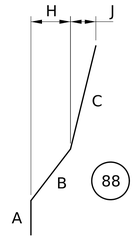

NO.	REVISION	DATE	BY

WEST VIRGINIA DEPARTMENT OF TRANSPORTATION
DIVISION OF HIGHWAYS
ENGINEERING DIVISION

I-64 OVER KANAWHA RIVER
EUGENE A. CARTER MEMORIAL BRIDGE +3

SUBSTRUCTURE REPAIR
ABUTMENT D (6 OF X)

DESIGNED	DATE
ABO	11/25
DRAWN	
AFMO	11/25
CHECKED	
REVIEWED	

HDR ENGINEERING INC.
CONSULTING ENGINEERS
CHARLESTON, WV
681-341-6100

SHEET OF

BRIDGE NO. 2563.6

SNOLEN $DD-MMM-YYYY HH:MM$ pw://pwhdruseas02.intranet.hdr:HDR_US_East_02/Documents/WV_DOT/WVDOT-Eugene_Carter_Bridge_3/6.0_CAD_BIM/6.2_WIP/HDR/6.2.2_Sheet_Files/23_Structure/2.036 Substructure Repair Abutment D (6 of X).dgn

PROJECT NUMBERS		DISTRICT	COUNTY	SHEET NO.	TOTAL
STATE	FEDERAL				
S320-64-57.44 00	NHPP-0064 (497)D	1	KANAWHA		

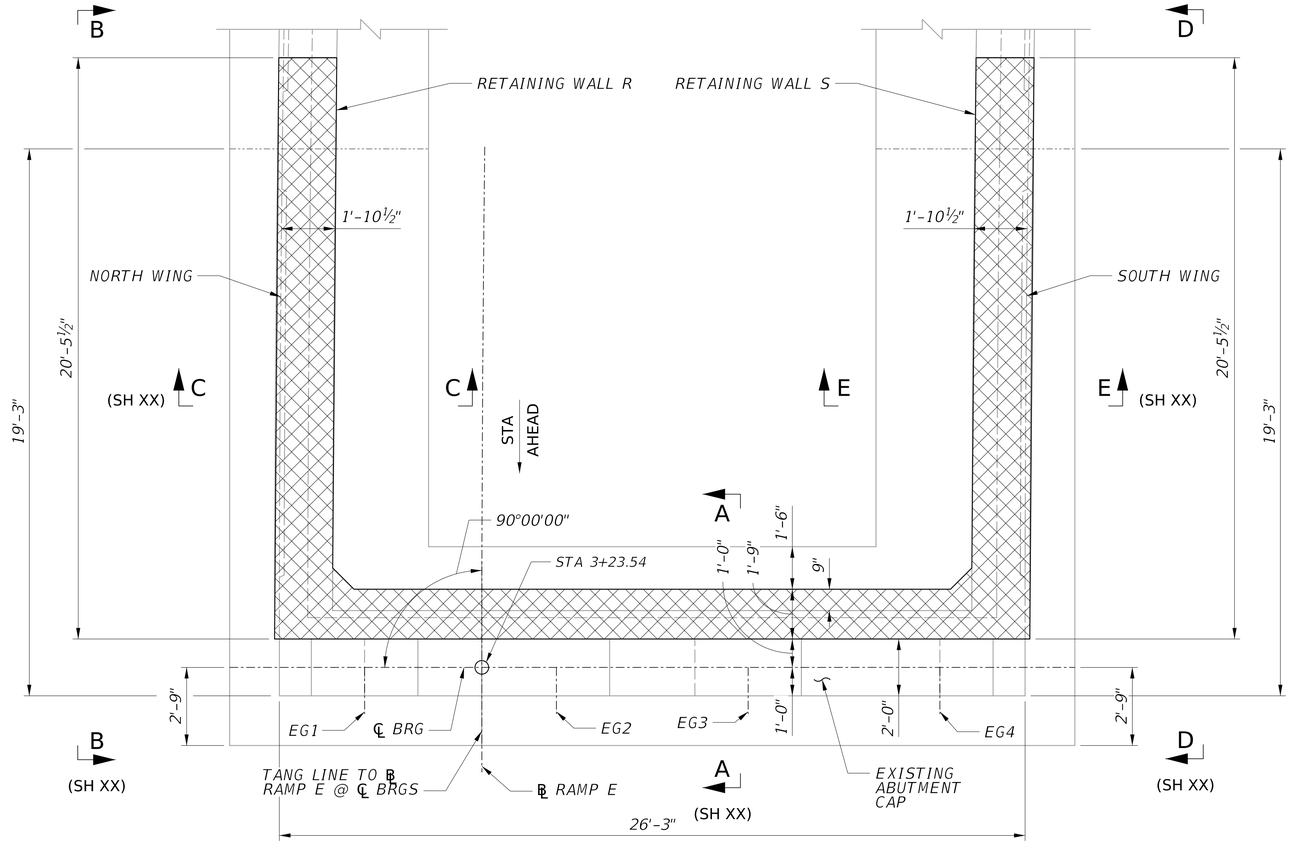

PLAN

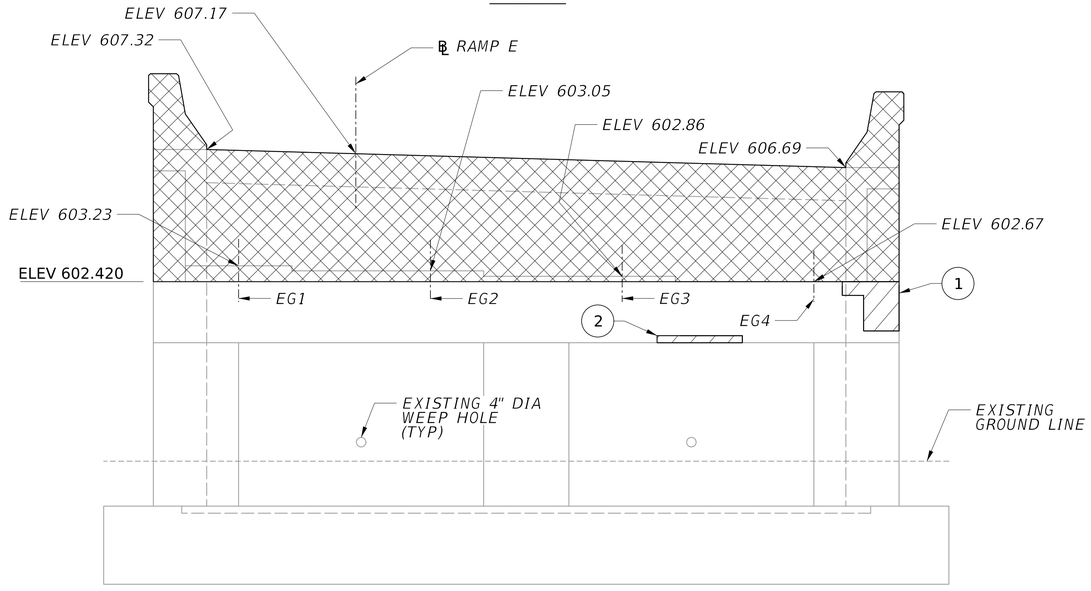

ELEVATION

(LOOKING BACK STATION)

CONCRETE REMOVAL NOTES:

1. EXISTING CONCRETE IS TO BE SAWCUT AT THE CUTLINES INDICATED IN THE PLANS.
2. A 1" DEEP SAWCUT SHALL BE MADE AROUND THE PERIMETER OF THE CONCRETE TO BE REMOVED AT THE LOCATIONS SHOWN ON THE PLANS. ELEVATIONS SHOWN ARE FROM EXISTING PLANS CONVERTED TO THE NAVD 88 DATUM. ELEVATIONS ENCOUNTERED IN THE FIELD MAY VARY FROM VALUES SHOWN.
3. PNEUMATIC HAMMERS WITH IMPACT RATINGS OF 30 FT/LBS OR LESS MAY BE USED IF REQUIRED.
4. CLEAN EXISTING CONCRETE IN ACCORDANCE WITH THE MANUFACTURERS RECOMMENDATIONS PRIOR TO PLACING THE EPOXY BONDING COMPOUND.
5. PRIOR TO PLACING NEW CONCRETE, COAT THE SURFACE OF THE EXISTING CONCRETE WHICH WILL BE IN CONTACT WITH NEW CONCRETE WITH THE EPOXY BONDING COMPOUND.
6. COST OF CLEANING EXISTING CONCRETE AND EPOXY BONDING COMPOUND IS INCIDENTAL TO THE UNIT PRICE FOR THE CLASS OF CONCRETE BEING PLACED.
7. BURN OFF ALL EXISTING VERTICAL REINFORCEMENT TO 2" BELOW BACKWALL CUTLINE ELEVATION AND FILL HOLE WITH NON-SHRINK, NON-METALIC GROUT PRIOR TO PLACING BACKFILL AND EPS.

SUMMARY OF CONCRETE REPAIR QUANTITIES

ID	UNITS	ESTIMATED QUANTITY	REPAIR
1	SF	1.9	C1
2	SF	2.5	C1
TOTAL C1 (DOCUMENTED)		4.4	
TOTAL C1 (ADJUSTED)		5.7	
	LF	X	C2
TOTAL C2 (DOCUMENTED)		0.0	
TOTAL C2 (ADJUSTED)		0.0	

C1 QUANTITY INCLUDES BOTH C1B AND C1C REPAIRS.

LEGEND:

- (*) REPAIR ID NUMBER
- C1 CONCRETE REPAIR
- CONCRETE REMOVAL
- C2 EPOXY INJECTION CRACK REPAIR

NOTES:

1. FOR GENERAL NOTES, SEE SHEETS XX THRU XX.
2. FOR ADDITIONAL DIMENSIONS AND INFORMATION, SEE EXISTING BRIDGE PLANS.
3. ADJUSTED REPAIR QUANTITIES TOTALS INCLUDE 30% CONTINGENCY FOR CONCRETE REPAIR DETAILS, SEE SHEET XX THRU XX.
4. CLEAN EXISTING WEEP HOLES THAT REMAIN AFTER DEMOLITION OF THE PORTIONS OF THE SUBSTRUCTURE UNITS AS INDICATED ON THE PLANS. PAYMENT FOR CLEANING OF WEEP HOLES IN INCIDENTAL TO ITEM 212001-000, "STRUCTURE EXCAVATION".
5. ELEVATIONS SHOWN ARE FROM ORIGINAL CONSTRUCTION PLANS STATIONS CONVERTED TO NAVD 88 DATUM, AND ARE GIVEN AT ℄ BEARING ABUTMENT E.

1 0 1 2 3 ft.

⅜" = 1'-0"

NO.	REVISION	DATE	BY

WEST VIRGINIA DEPARTMENT OF TRANSPORTATION
DIVISION OF HIGHWAYS
ENGINEERING DIVISION

I-64 OVER KANAWHA RIVER
EUGENE A. CARTER MEMORIAL BRIDGE +3

SUBSTRUCTURE REPAIRS ABUTMENT E REMOVAL (1 OF 2)

DESIGNED	DATE
LYH	12/25
DRAWN	DATE
DJC	12/25
CHECKED	
REVIEWED	

Mead & Hunt

MEAD & HUNT INC.
CONSULTING ENGINEERS
CHARLESTON, WV
304-345-6712

SHEET OF
BRIDGE NO. 2563.6

X:\324160\251911.01\TECH\Structures\Ramp E\sheets\str_abt_001_Ramp E_Eugene Carter Memorial Bridge.dgn
$DD-MMM-YYYY HH:MM$
1420djc

PROJECT NUMBERS		DISTRICT	COUNTY	SHEET NO.	TOTAL
STATE	FEDERAL				
S320-64-57.44 00	NHPP-0064 (497)D	1	KANAWHA		

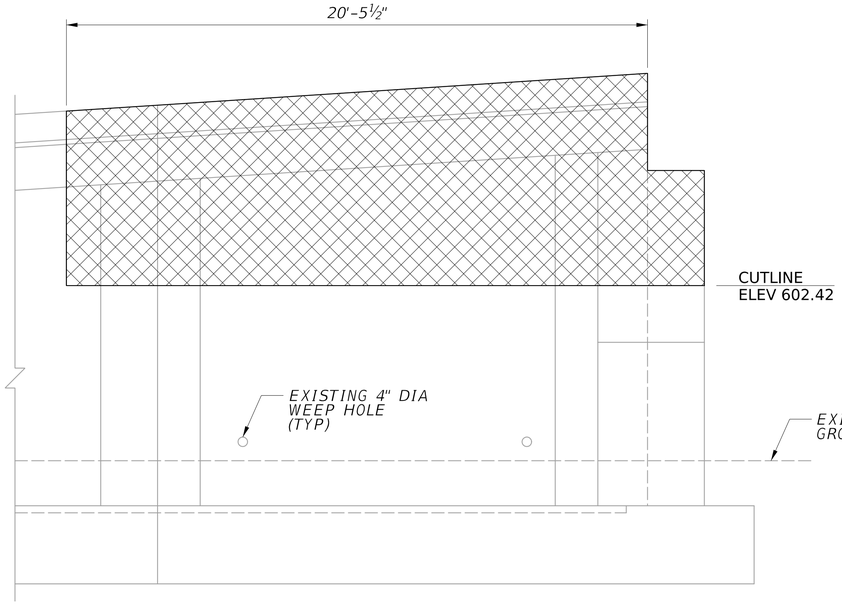

VIEW B-B

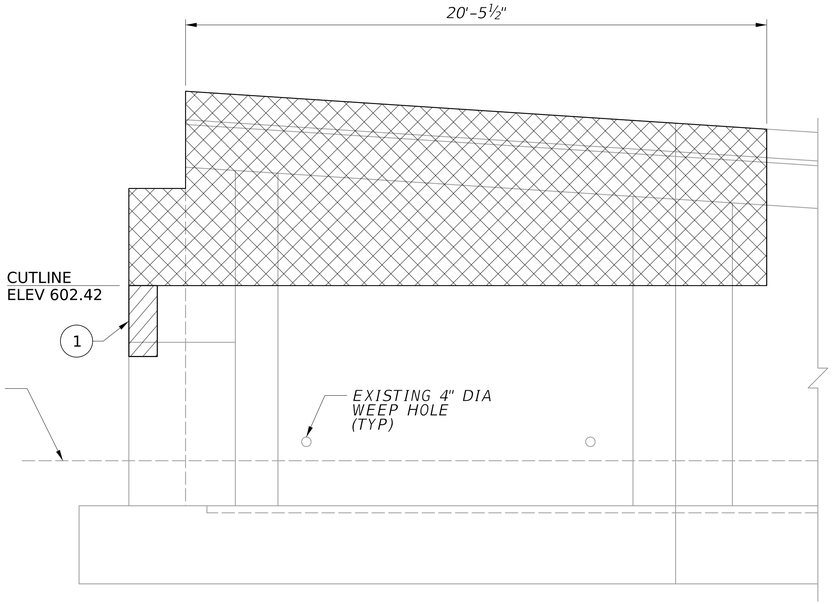

VIEW D-D

SUMMARY OF CONCRETE REPAIR QUANTITIES			
ID	UNITS	ESTIMATED QUANTITY	REPAIR
1	SF	2.5	C1
TOTAL C1 (DOCUMENTED)		2.5	
TOTAL C1 (ADJUSTED)		3.3	
X	LF	X	C2
TOTAL C2 (DOCUMENTED)		X	
TOTAL C2 (ADJUSTED)		X	

C1 QUANTITY INCLUDES BOTH C1B AND C1C REPAIRS.

SECTION A-A

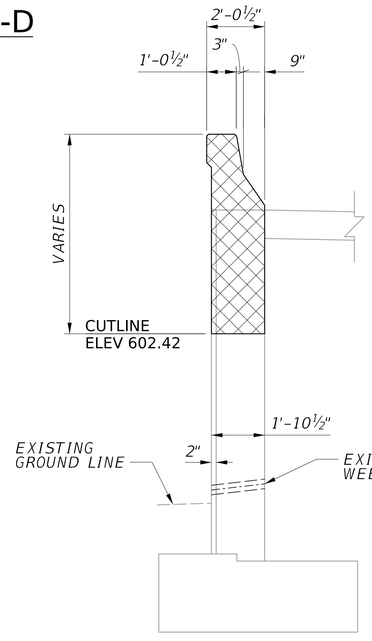

SECTION C-C

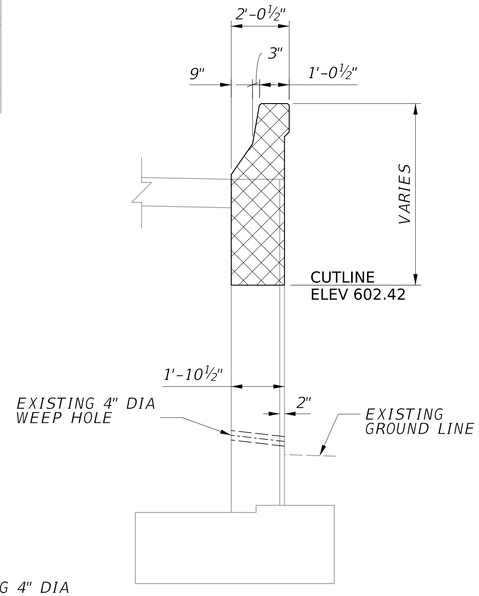

SECTION E-E

LEGEND:

- (*) REPAIR ID NUMBER
- C1 CONCRETE REPAIR
- CONCRETE REMOVAL
- C2 EPOXY INJECTION CRACK REPAIR

NOTES:

1. FOR GENERAL NOTES, SEE SHEETS XX THRU XX.
2. FOR LOCATION OF SECTIONS A-A, B-B, C-C, D-D, E-E, SEE SHEET X.
3. FOR ADDITIONAL DIMENSIONS AND INFORMATION, SEE EXISTING BRIDGE PLANS.
4. CLEAN ALL EXISTING WEEP HOLES THAT REMAIN AFTER DEMOLITION OF THE PORTIONS OF THE SUBSTRUCTURE UNITS AS INDICATED ON THE PLANS. PAYMENT FOR CLEANING OF WEEP HOLES IS INCIDENTAL TO ITEM 212001-000, "STRUCTURE EXCAVATION".
5. ADDITIONAL EXCAVATION REQUIRED FOR WINGWALL MODIFICATIONS IS INCIDENTAL TO ITEM 212001-000, STRUCTURE EXCAVATION.
6. ADJUSTED REPAIR QUANTITIES TOTALS INCLUDE 30% CONTINGENCY FOR CONCRETE REPAIR DETAILS, SEE SHEETS X THRU X.

1 0 1 2 3 ft.

⅜" = 1'-0"

NO.	REVISION	DATE	BY

WEST VIRGINIA DEPARTMENT OF TRANSPORTATION
DIVISION OF HIGHWAYS
ENGINEERING DIVISION

I-64 OVER KANAWHA RIVER
EUGENE A. CARTER MEMORIAL BRIDGE +3

SUBSTRUCTURE REPAIRS
ABUTMENT E REMOVAL (2 OF 2)

DESIGNED	DATE
LYH	12/25
DRAWN	
DJC	12/25
CHECKED	
REVIEWED	

Mead & Hunt

MEAD & HUNT INC.
CONSULTING ENGINEERS
CHARLESTON, WV
304-345-6712

SHEET
OF
BRIDGE NO.
2563.6

X:\32416002\251911.01\TECH\Structures\Ramp E\sheets\str_abt_002_Ramp E_Eugene Carter Memorial Bridge.dgn
$DD-MMM-YYYY HH:MM$
1420djc

PROJECT NUMBERS		DISTRICT	COUNTY	SHEET NO.	TOTAL
STATE	FEDERAL				
S320-64-57.44 00	NHPP-0064 (497)D	1	KANAWHA		

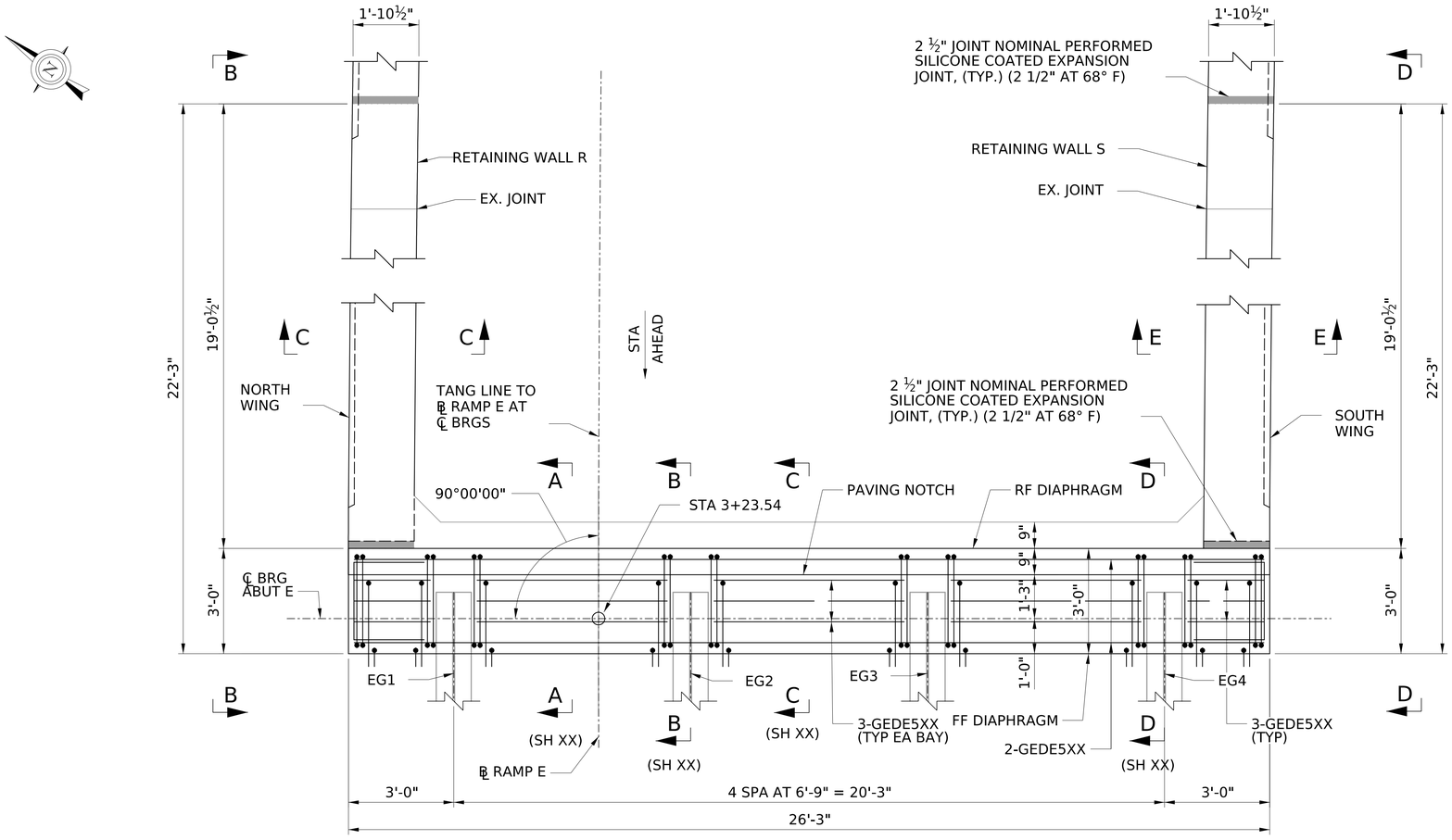

PLAN

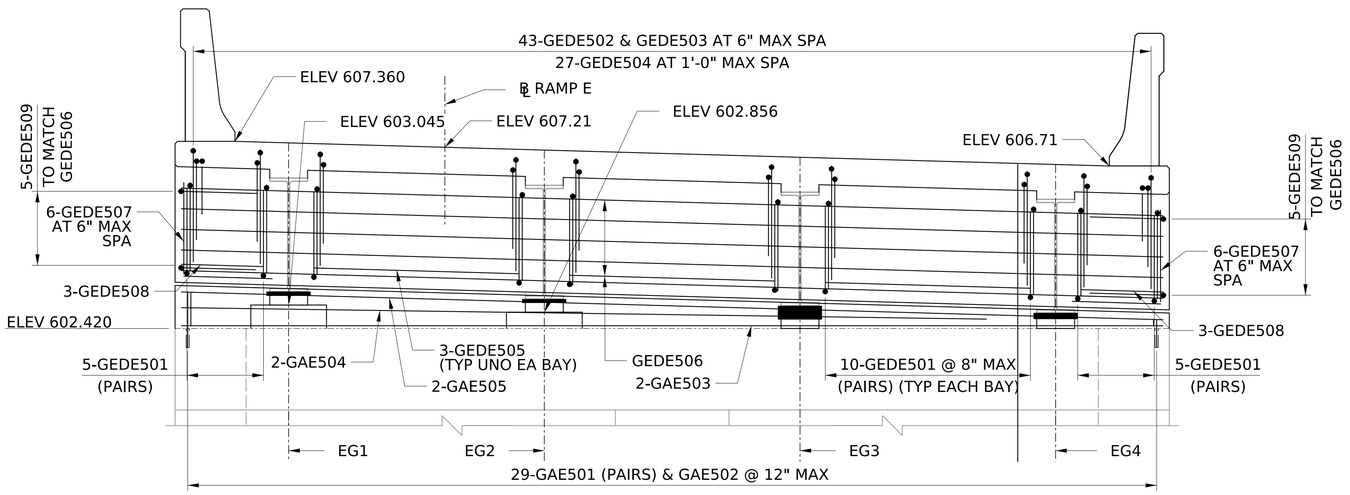

ELEVATION
(LOOKING BACK STATION)

1 0 1 2 ft.
½" = 1'-0"

NOTES:

1. FOR GENERAL NOTES, SEE SHEETS XX THRU XX.
2. FOR SECTION A-A, C-C, AND E-E, SEE SHEET X.
3. FOR VIEW B-B & D-D, AND ADDITIONAL WINGWALL DETAILS, SEE SHEET X.
4. FOR ADDITIONAL CURB DETAILS, SEE SHEET X.
5. FOR REINFORCING SCHEDULE, SEE SHEET X.
6. FOR PEDESTAL DETAILS SEE SHEET X.
7. FOR BEARING DETAILS SEE SHEET X THRU X.
8. EXISTING STEEL DIAPHRAGM (NOT SHOWN) TO REMAIN AND BE ENCASED IN CONCRETE END DIAPHRAGM.
9. END DIAPHRAGMS SHALL BE CLASS H CONCRETE. ABUTMENT PEDESTALS AND WINGWALLS SHALL BE CLASS B CONCRETE.
10. REBAR CLEAR COVER SHALL BE 2" UNLESS OTHERWISE NOTES.

NO.	REVISION	DATE	BY

WEST VIRGINIA DEPARTMENT OF TRANSPORTATION
DIVISION OF HIGHWAYS
ENGINEERING DIVISION

I-64 OVER KANAWHA RIVER
EUGENE A. CARTER MEMORIAL BRIDGE +3

SUBSTRUCTURE REPAIRS
ABUTMENT E PROPOSED (1 OF 4)

DESIGNED	DATE
LYH	12/25
DRAWN	
DJC	12/25
CHECKED	
REVIEWED	

Mead & Hunt

MEAD & HUNT INC.
CONSULTING ENGINEERS
CHARLESTON, WV
304-345-6712

SHEET
OF
BRIDGE NO.
2563.6

X:\324160025\1911.01\TECH\Structures\Ramp E\sheets\str_abt_003_Ramp E_Eugene Carter Memorial Bridge.dgn
$DD-MMM-YYYY HH:MM$
1420djc

PROJECT NUMBERS		DISTRICT	COUNTY	SHEET NO.	TOTAL
STATE	FEDERAL				
S320-64-57.44 00	NHPP-0064 (497)D	1	KANAWHA		

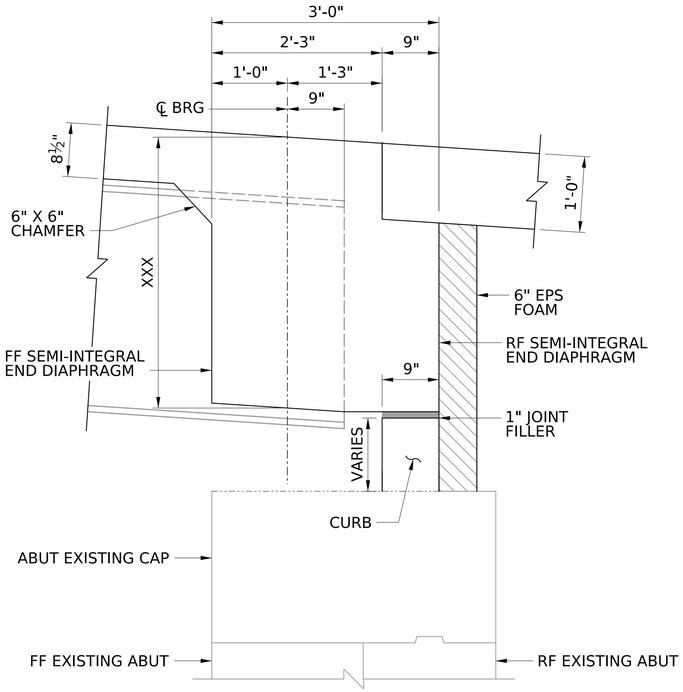

SECTION A-A

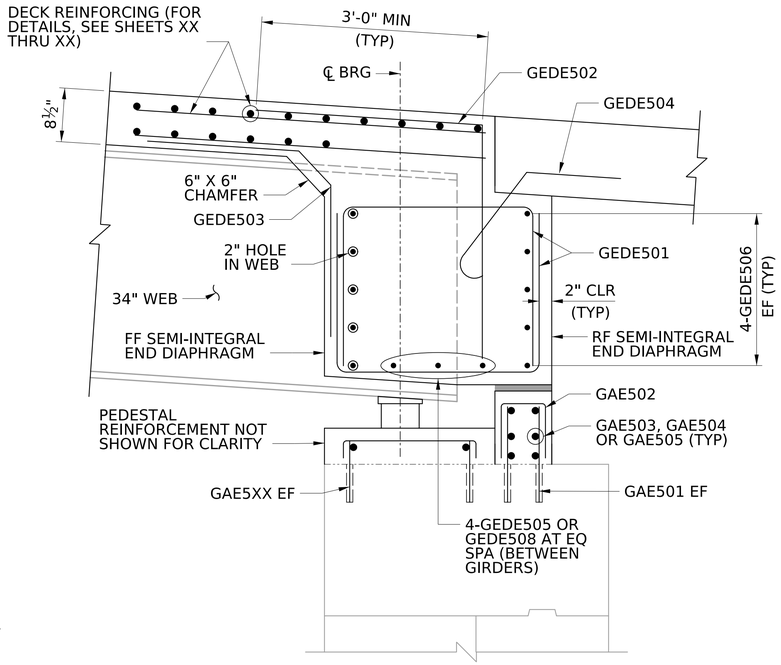

SECTION B-B

ABUTMENT E QUANTITIES

ITEM NO	DESCRIPTION	UNIT	QUANTITIES
601002-001	CLASS B CONCRETE	CY	X
601009-001	CLASS H CONCRETE	CY	X
	INCIDENTAL ITEMS (FOR INFORMATION ONLY)		
	NEOPRENE SHEETING	SF	X
	HOLE IN EXISTING STEEL WEBS	EA	X
601019-001	CONCRETE PROTECTIVE COATING	SF	X
601037-001	DOWEL HOLE, VARIABLE	EA	X
602002-001	EPOXY COATED REINFORCING STEEL BAR	LB	X

CLASS B CONCRETE SHALL BE USED IN THE CURB,
ALL OTHER CONCRETE SHALL BE CLASS H.

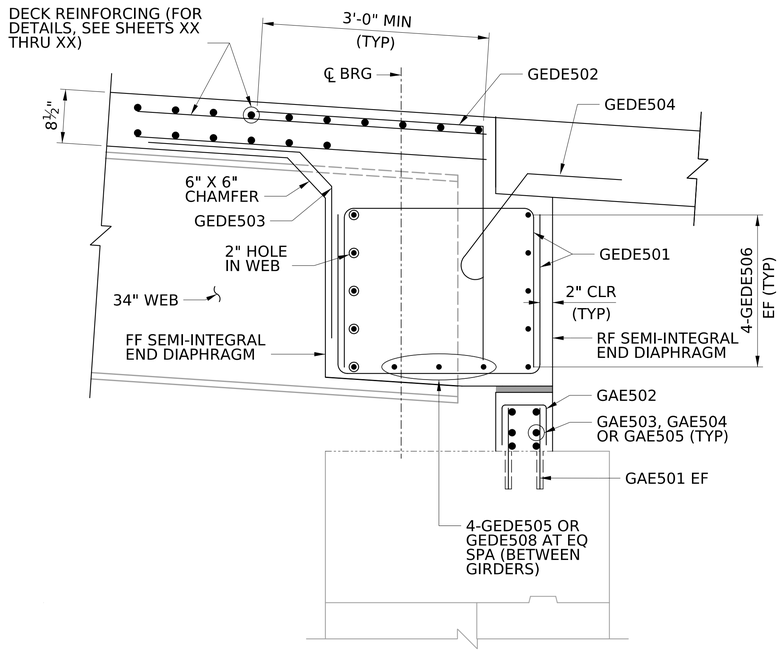

SECTION C-C

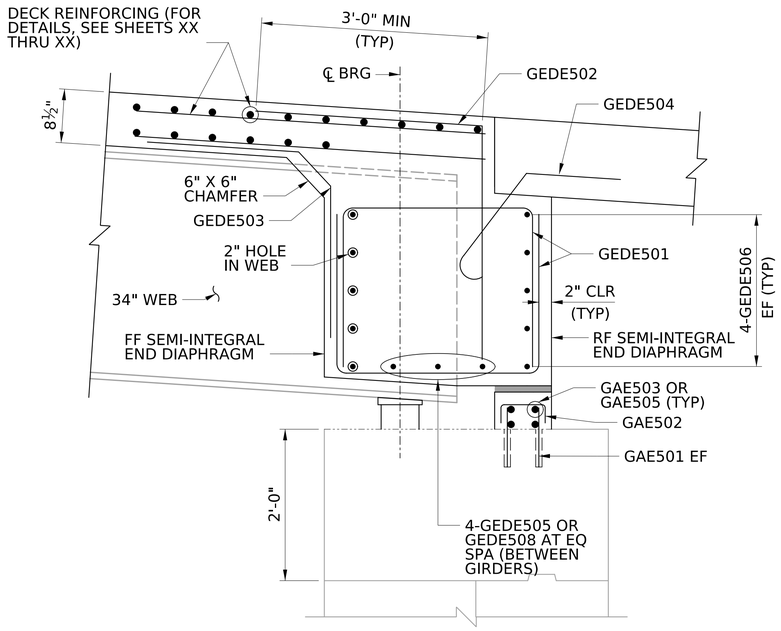

SECTION D-D

NOTES:

1. FOR GENERAL NOTES, SEE SHEETS XX THRU XX.
2. FOR LOCATION OF SECTIONS F-F, G-G, AND H-H, SEE SHEET XX.
3. FOR ADDITIONAL CURB DETAILS, SEE SHEET X.
4. FOR ADDITIONAL NOTES, SEE SHEET X.
5. USE HILTI HIT-RE EPOXY ANCHORING SYSTEM (OR APPROVED EQUAL) IN DOWEL HOLES, USE THE GREATER OF MINIMUM EMBEDMENT SHOWN ON PLANS OR IN ACCORDANCE WITH MANUFACTURER'S INSTRUCTIONS. PROVIDE HOLE DIAMETER IN ACCORDANCE WITH THE MANUFACTURER'S INSTRUCTIONS.

6 0 6 12 in.
1" = 1'-0"

NO.	REVISION	DATE	BY

WEST VIRGINIA DEPARTMENT OF TRANSPORTATION
DIVISION OF HIGHWAYS
ENGINEERING DIVISION

I-64 OVER KANAWHA RIVER
EUGENE A. CARTER MEMORIAL BRIDGE +3
SUBSTRUCTURE REPAIRS
ABUTMENT E PROPOSED (2 OF 4)

DESIGNED LYH	DATE 12/25
DRAWN DJC	12/25
CHECKED	
REVIEWED	

Mead & Hunt

MEAD & HUNT INC.
CONSULTING ENGINEERS
CHARLESTON, WV
304-345-6712

SHEET
OF
BRIDGE NO. 2563.6

14220djc $DD-MMM-YYYY HH:MM$ X:\324160025191 1.01\TECH\Structures\Ramp Elsheets\str_abt_004_Ramp E_Eugene Carter Memorial Bridge.dgn

PROJECT NUMBERS		DISTRICT	COUNTY	SHEET NO.	TOTAL
STATE	FEDERAL				
S320-64-57.44 00	NHPP-0064 (497)D	1	KANAWHA		

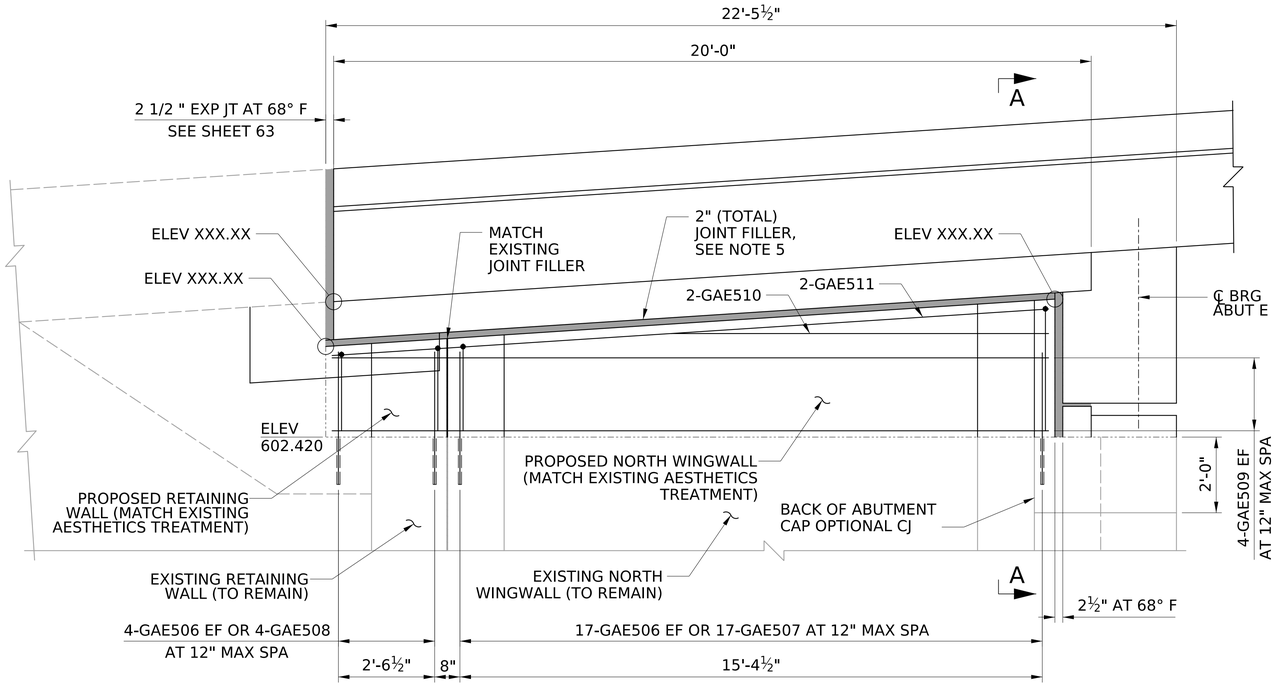

VIEW B-B

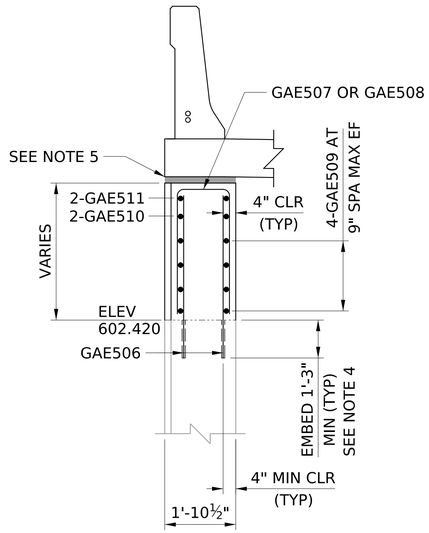

SECTION A-A

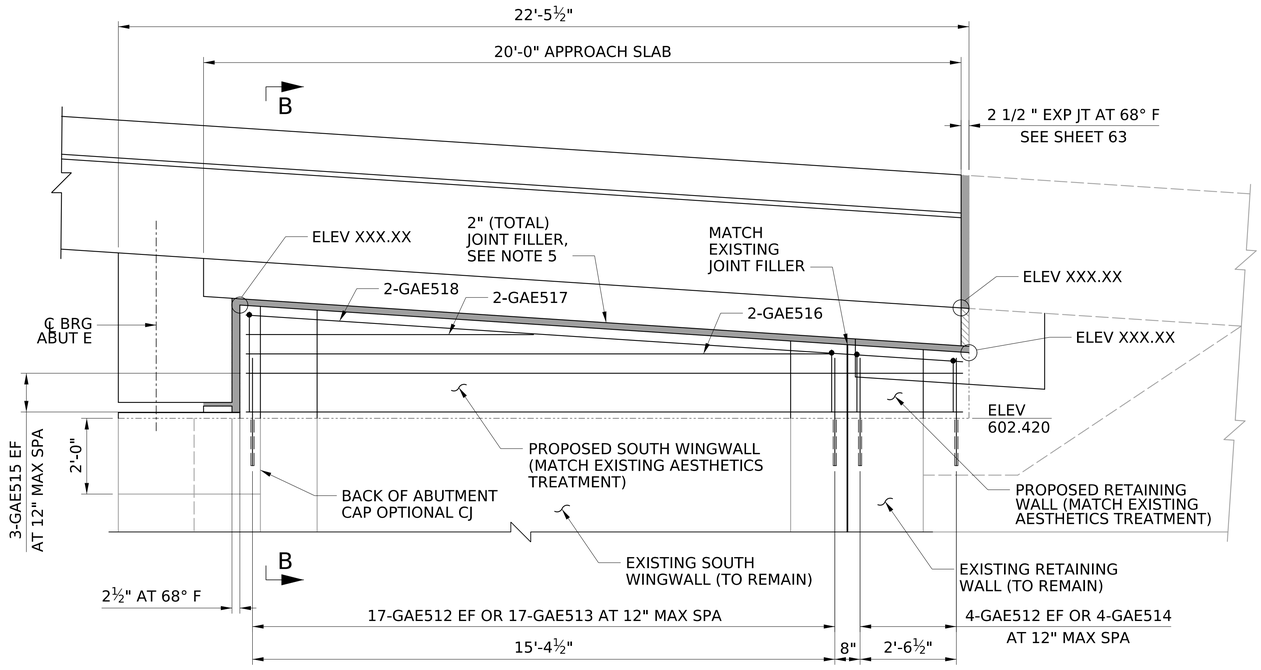

VIEW D-D

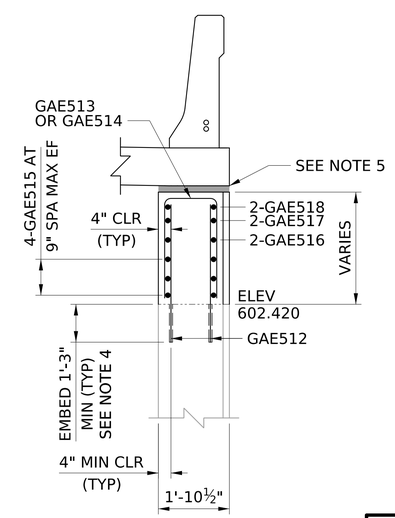

SECTION B-B

1 0 1 2 ft.
½" = 1'-0"

NOTES:

1. FOR GENERAL NOTES, SEE SHEETS XX THRU XX.
2. FOR ADDITIONAL ABUTMENT NOTES, SEE SHEET X.
3. FOR REINFORCING SCHEDULE, SEE SHEET X.
4. USE HILTI HIT-RE EPOXY ANCHORING SYSTEM (OR APPROVED EQUAL) IN DOWEL HOLES, USE THE GREATER OF MINIMUM EMBEDMENT SHOWN ON PLANS OR IN ACCORDANCE WITH MANUFACTURER'S INSTRUCTIONS. PROVIDE HOLE DIAMETER IN ACCORDANCE WITH THE MANUFACTURER'S INSTRUCTIONS.
5. FOR DETAILS OF JOINT FILLER BETWEEN REBUILT WINGWALL AND APPROACH SLAB, SEE SHEET X.
6. FOR REINFORCEMENT OF BARRIERS MOUNTED ON WINGWALL, SEE SHEETS X AND X.

NO.	REVISION	DATE	BY

WEST VIRGINIA DEPARTMENT OF TRANSPORTATION
DIVISION OF HIGHWAYS
ENGINEERING DIVISION

I-64 OVER KANAWHA RIVER
EUGENE A. CARTER MEMORIAL BRIDGE +3
SUBSTRUCTURE REPAIRS
ABUTMENT E PROPOSED (3 OF 4)

DESIGNED	DATE
LYH	12/25
DRAWN	
DJC	12/25
CHECKED	
REVIEWED	

Mead & Hunt
MEAD & HUNT INC.
CONSULTING ENGINEERS
CHARLESTON, WV
304-345-6712

SHEET OF
BRIDGE NO. 2563.6

X:\3241600\251911.01\TECH\Structures\Ramp E\sheets\str_abt_005_Ramp E_Eugene Carter Memorial Bridge.dgn
$DD-MMM-YYYY HH:MM$
1420djc

PROJECT NUMBERS		DISTRICT	COUNTY	SHEET NO.	TOTAL
STATE	FEDERAL				
S320-64-57.44 00	NHPP-0064 (497)D	1	KANAWHA		

ABUTMENT E REINFORCING

MARK	NO	LENGTH	WEIGHT	TYPE	A	B	C	D	E	G	J	NOTES
TOTAL REINFORCING			X	LBS								

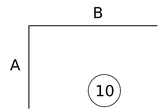

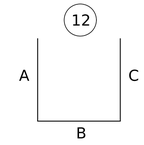

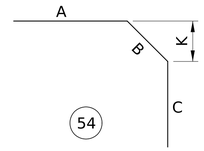

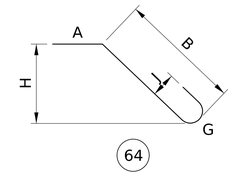

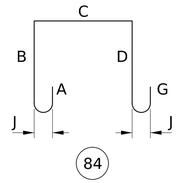

NOTES:

1. FOR GENERAL NOTES, SEE SHEETS XX AND XX.
2. REINFORCING BARS SHALL BE IN ACCORDANCE WITH SECTION 602 OF THE STANDARD SPECIFICATIONS.
3. BENDING OF REINFORCING BARS SHALL BE IN ACCORDANCE WITH SECTION 602.5. RAIL-STEEL BARS SHALL NOT BE FIELD BENT OR STRAIGHTENED.
4. REINFORCING BAR SCHEDULE IS FOR INFORMATION ONLY. VERIFY SCHEDULE PRIOR TO BIDDING AND FABRICATION.
5. NO CORRECTION IN LENGTH FOR BEND CURVATURE IS TO BE MADE.
6. ALL DIMENSIONS ARE OUT-TO-OUT OF BAR EXCEPT "A" AND "G" ON STANDARD 135° AND 180° HOOKS, AND "R" WHICH IS SHOWN TO THE INSIDE OF THE BAR.
7. IF NOT SHOWN, "J" DIMENSIONS ON 180° HOOKS ARE STANDARD HOOKS.
8. NUMBERS IN CIRCLES INDICATE BAR TYPE.
9. UNLESS NOTED OTHERWISE, REINFORCING BARS SHALL BE AASHTO M31 GRADE 60 AND SHALL BE CONTINUOUS HOT-DIP GALVANIZED IN ACCORDANCE WITH ASTM A1094 OR ASTM A767, PAYABLE UNDER ITEM 602002-003 "GALVANIZED REINFORCING STEEL".

NO.	REVISION	DATE	BY

WEST VIRGINIA DEPARTMENT OF TRANSPORTATION
DIVISION OF HIGHWAYS
ENGINEERING DIVISION

I-64 OVER KANAWHA RIVER
EUGENE A. CARTER MEMORIAL BRIDGE +3
SUBSTRUCTURE REPAIRS
ABUTMENT E PROPOSED (4 OF 4)

DESIGNED	LYH	DATE	10/25
DRAWN	DJC		10/25
CHECKED			
REVIEWED			

Mead & Hunt

MEAD & HUNT INC.
CONSULTING ENGINEERS
CHARLESTON, WV
304-345-6712

SHEET OF

BRIDGE NO. 2563.6

1420djc $DD-MMM-YYYY HH:MM$ X:\32416001\251911.01\TECH\Structures\Ramp E\sheets\str_abt_006_Ramp E_Eugene Carter Memorial Bridge.dgn

PROJECT NUMBERS		DISTRICT	COUNTY	SHEET NO.	TOTAL
STATE	FEDERAL				
S320-64-57.44 00	NHPP-0064 (497)D	1	KANAWHA		

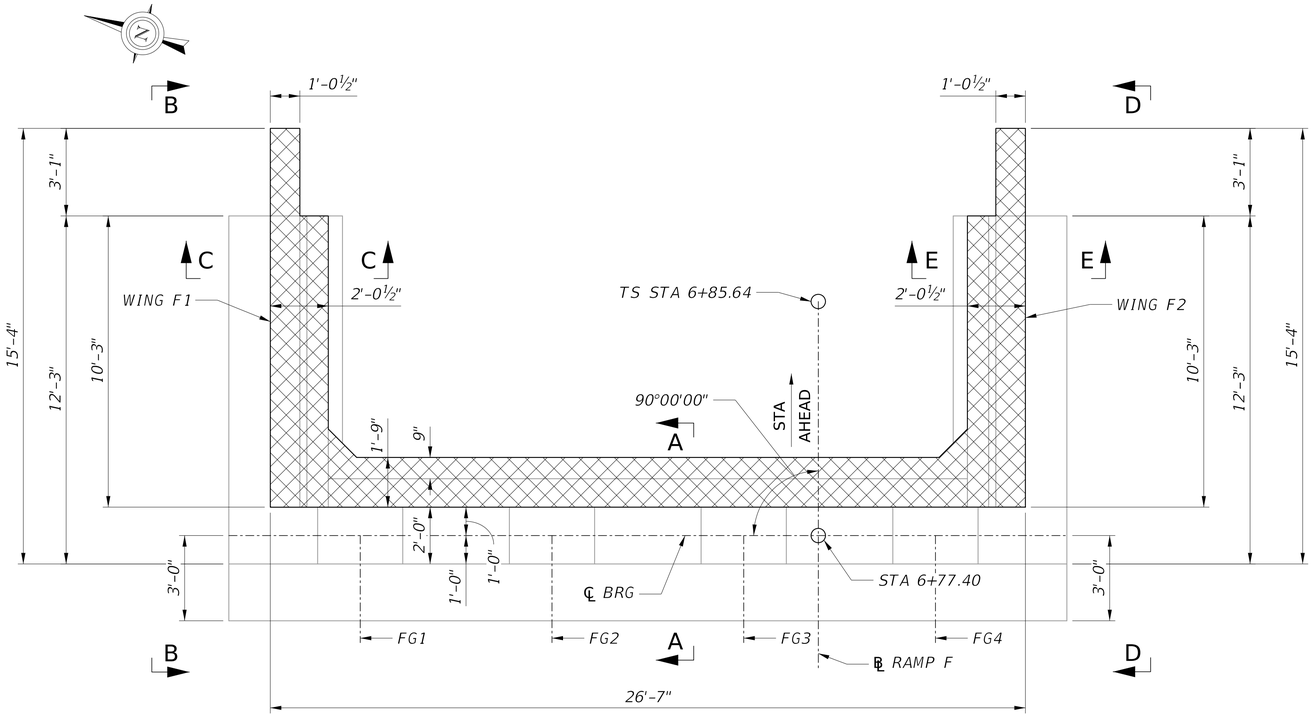

PLAN

CONCRETE REMOVAL NOTES:

1. EXISTING CONCRETE IS TO BE SAWCUT AT THE CUTLINES INDICATED IN THE PLANS.
2. A 1" DEEP SAWCUT SHALL BE MADE AROUND THE PERIMETER OF THE CONCRETE TO BE REMOVED AT THE LOCATIONS SHOWN ON THE PLANS. ELEVATIONS SHOWN ARE FROM EXISTING PLANS CONVERTED TO THE NAVD 88 DATUM. ELEVATIONS ENCOUNTERED IN THE FIELD MAY VARY FROM VALUES SHOWN.
3. PNEUMATIC HAMMERS WITH IMPACT RATINGS OF 30 FT/LBS OR LESS MAY BE USED IF REQUIRED.
4. CLEAN EXISTING CONCRETE IN ACCORDANCE WITH THE MANUFACTURERS RECOMMENDATIONS PRIOR TO PLACING THE EPOXY BONDING COMPOUND.
5. PRIOR TO PLACING NEW CONCRETE, COAT THE SURFACE OF THE EXISTING CONCRETE WHICH WILL BE IN CONTACT WITH NEW CONCRETE WITH THE EPOXY BONDING COMPOUND.
6. COST OF CLEANING EXISTING CONCRETE AND EPOXY BONDING COMPOUND IS INCIDENTAL TO THE UNIT PRICE FOR THE CLASS OF CONCRETE BEING PLACED.
7. BURN OFF ALL EXISTING VERTICAL REINFORCEMENT TO 2" BELOW BACKWALL CUTLINE ELEVATION AND FILL HOLE WITH NON-SHRINK, NON-METALIC GROUT PRIOR TO PLACING BACKFILL AND EPS.

SUMMARY OF CONCRETE REPAIR QUANTITIES			
ID	UNITS	ESTIMATED QUANTITY	REPAIR
1	SF	3.0	C1
TOTAL C1 (DOCUMENTED)		3.0	
TOTAL C1 (ADJUSTED)		3.9	
	LF	X	C2
TOTAL C2 (DOCUMENTED)		0.0	
TOTAL C2 (ADJUSTED)		0.0	

C1 QUANTITY INCLUDES BOTH C1B AND C1C REPAIRS.

LEGEND:

- (*) REPAIR ID NUMBER
- C1 CONCRETE REPAIR
- CONCRETE REMOVAL
- C2 EPOXY INJECTION CRACK REPAIR

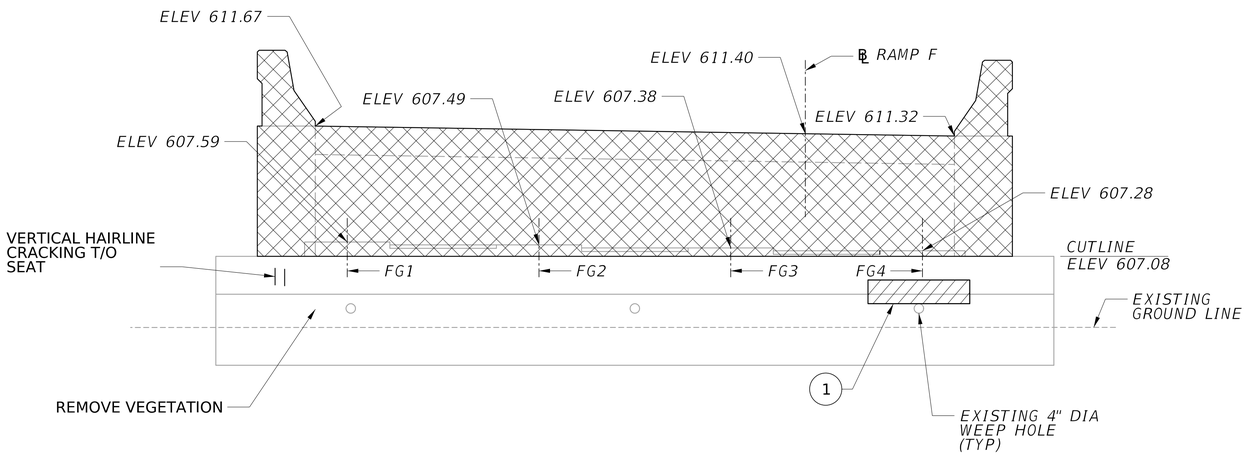

ELEVATION
(LOOKING AHEAD STATION)

NOTES:

1. FOR GENERAL NOTES, SEE SHEETS XX THRU XX.
2. FOR ADDITIONAL DIMENSIONS AND INFORMATION, SEE EXISTING BRIDGE PLANS.
3. ADJUSTED REPAIR QUANTITIES TOTALS INCLUDE 30% CONTINGENCY FOR CONCRETE REPAIR DETAILS, SEE SHEET XX THRU XX.
4. CLEAN EXISTING WEEP HOLES THAT REMAIN AFTER DEMOLITION OF THE PORTIONS OF THE SUBSTRUCTURE UNITS AS INDICATED ON THE PLANS. PAYMENT FOR CLEANING OF WEEPHOLES IN INCIDENTAL TO ITEM 212001-000, "STRUCTURE EXCAVATION".
5. ELEVATIONS SHOWN ARE FROM ORIGINAL CONSTRUCTION PLANS STATIONS CONVERTED TO NAVD 88 DATUM, AND ARE GIVEN AT ℄ BEARING ABUTMENT E.

NO.	REVISION	DATE	BY

WEST VIRGINIA DEPARTMENT OF TRANSPORTATION
DIVISION OF HIGHWAYS
ENGINEERING DIVISION

I-64 OVER KANAWHA RIVER
EUGENE A. CARTER MEMORIAL BRIDGE +3

SUBSTRUCTURE REPAIRS ABUTMENT F REMOVAL (1 OF 2)

DESIGNED	DATE
LYH	12/25
DRAWN	
DJC	12/25
CHECKED	
REVIEWED	

1 0 1 2 3 ft.
⅜" = 1'-0"

Mead & Hunt

MEAD & HUNT INC.
CONSULTING ENGINEERS
CHARLESTON, WV
304-345-6712

SHEET
OF
BRIDGE NO.
2563.6

1420djc $DD-MMM-YYYY HH:MM$ X:\324160025191l.01\TECH\Structures\Ramp F\sheets\str_abt_001_Ramp F_Eugene Carter Memorial Bridge.dgn

PROJECT NUMBERS		DISTRICT	COUNTY	SHEET NO.	TOTAL
STATE	FEDERAL				
S320-64-57.44 00	NHPP-0064 (497)D	1	KANAWHA		

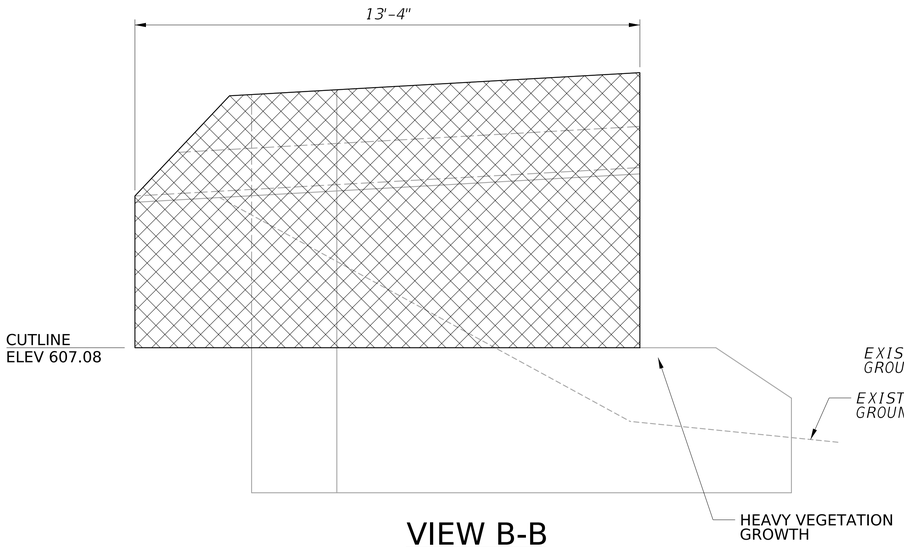

VIEW B-B

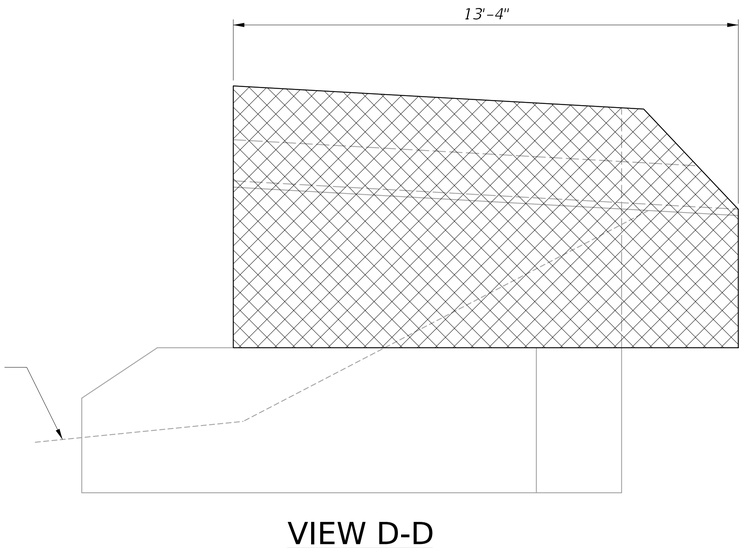

VIEW D-D

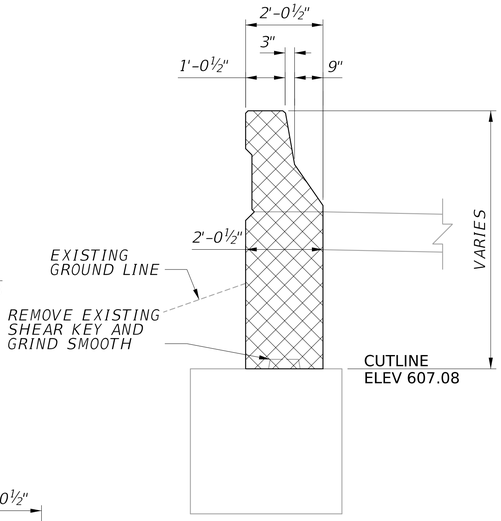

SECTION C-C

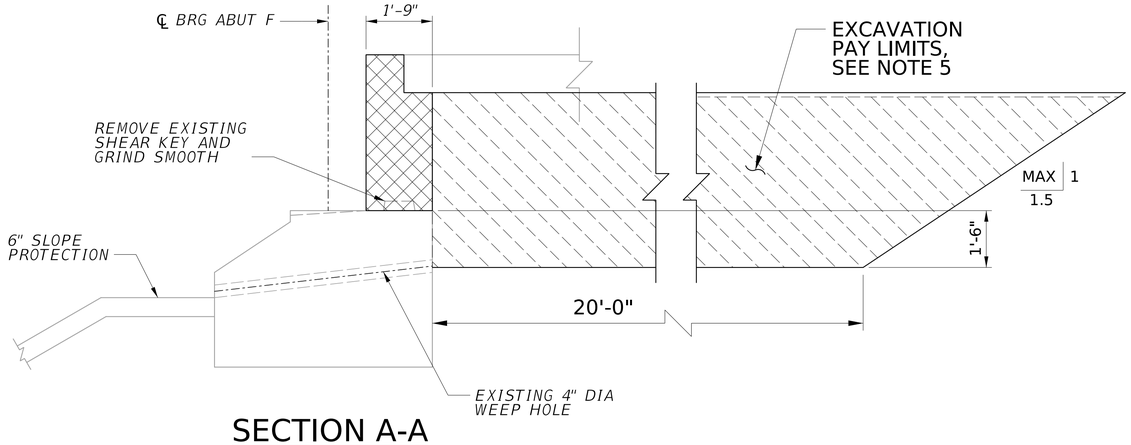

SECTION A-A

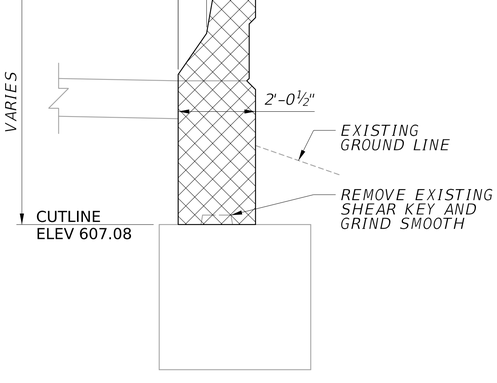

SECTION E-E

LEGEND:

- (*) REPAIR ID NUMBER
- C1 CONCRETE REPAIR
- CONCRETE REMOVAL
- C2 EPOXY INJECTION CRACK REPAIR

NOTES:

1. FOR GENERAL NOTES, SEE SHEETS XX AND XX.
2. FOR LOCATION OF SECTIONS A-A, B-B, C-C, D-D, E-E, SEE SHEET X.
3. FOR ADDITIONAL DIMENSIONS AND INFORMATION, SEE EXISTING BRIDGE PLANS.
4. CLEAN ALL EXISTING WEEP HOLES THAT REMAIN AFTER DEMOLITION OF THE PORTIONS OF THE SUBSTRUCTURE UNITS AS INDICATED ON THE PLANS. PAYMENT FOR CLEANING OF WEEP HOLES IS INCIDENTAL TO ITEM 212001-000, "STRUCTURE EXCAVATION".
5. ADDITIONAL EXCAVATION REQUIRED FOR WINGWALL MODIFICATIONS IS INCIDENTAL TO ITEM 212001-000, STRUCTURE EXCAVATION.
6. ADJUSTED REPAIR QUANTITIES TOTALS INCLUDE 30% CONTINGENCY FOR CONCRETE REPAIR DETAILS, SEE SHEETS X THRU X.

1 0 1 2 ft.
½" = 1'-0"

NO.	REVISION	DATE	BY

WEST VIRGINIA DEPARTMENT OF TRANSPORTATION
DIVISION OF HIGHWAYS
ENGINEERING DIVISION

I-64 OVER KANAWHA RIVER
EUGENE A. CARTER MEMORIAL BRIDGE +3
SUBSTRUCTURE REPAIRS
ABUTMENT F REMOVAL (2 OF 2)

DESIGNED	DATE
LYH	12/25
DRAWN	
DJC	12/25
CHECKED	
REVIEWED	

Mead & Hunt

MEAD & HUNT INC.
CONSULTING ENGINEERS
CHARLESTON, WV
304-345-6712

SHEET
OF
BRIDGE NO.
2563.6

1420djc $DD-MMM-YYYY HH:MM$ X:\324160025\1911.01\TECH\Structures\Ramp F\sheets\str_abt_002_Ramp F_Eugene Carter Memorial Bridge.dgn

PROJECT NUMBERS		DISTRICT	COUNTY	SHEET NO.	TOTAL
STATE	FEDERAL				
S320-64-57.44 00	NHPP-0064 (497)D	1	KANAWHA		

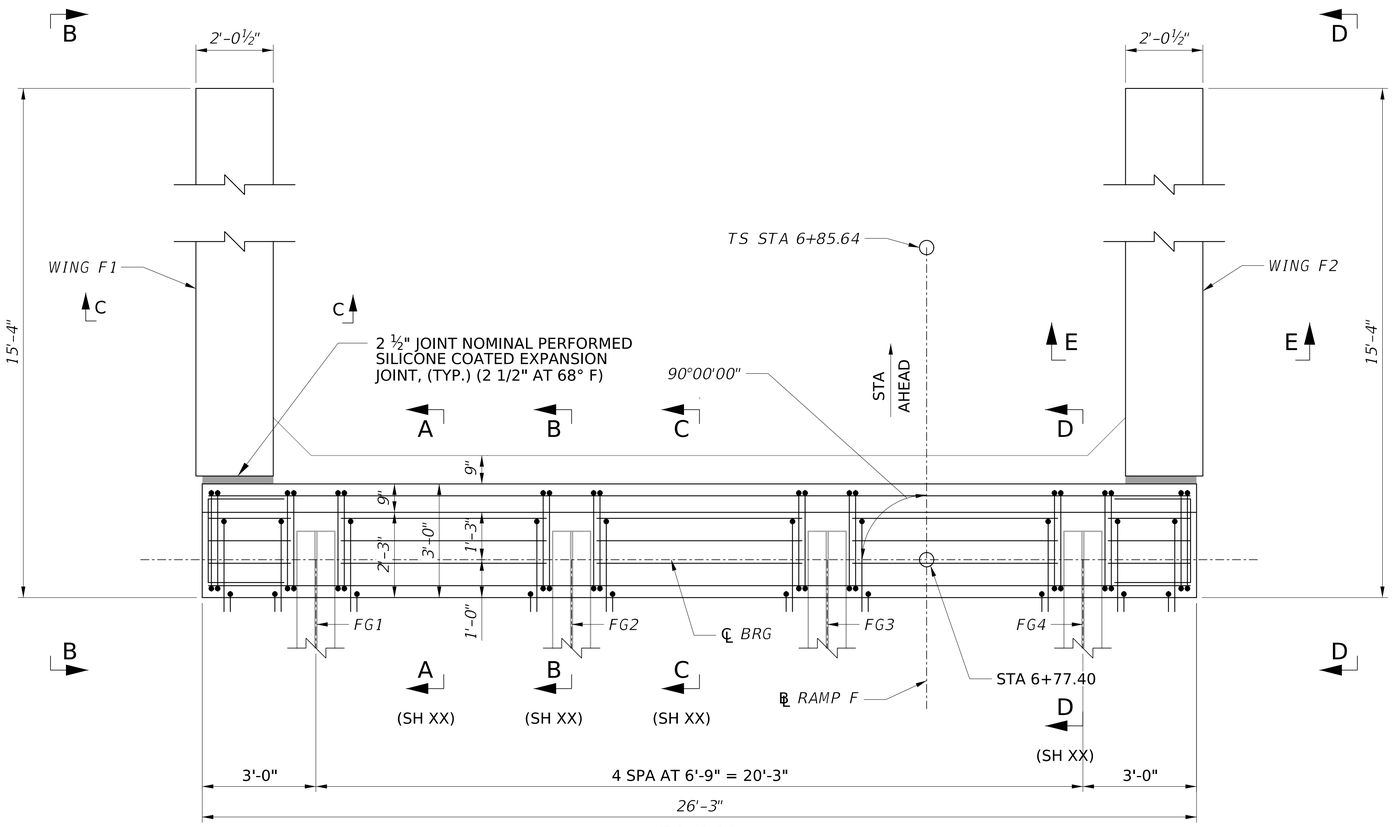

PLAN

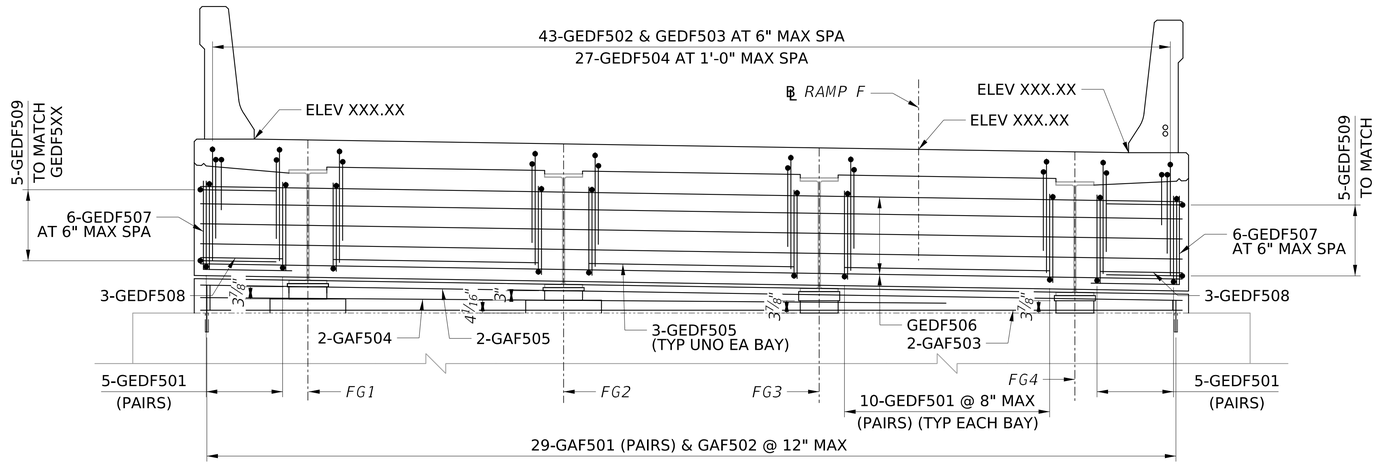

ELEVATION

(LOOKING AHEAD STATION)

1 0 1 2 ft.

½" = 1'-0"

NOTES:

1. FOR GENERAL NOTES, SEE SHEETS XX THRU XX.
2. FOR SECTION A-A, C-C, AND E-E, SEE SHEET X.
3. FOR VIEW B-B & D-D, AND ADDITIONAL WINGWALL DETAILS, SEE SHEET X.
4. FOR ADDITIONAL CURB DETAILS, SEE SHEET X.
5. FOR REINFORCING SCHEDULE, SEE SHEET X.
6. FOR PEDESTAL DETAILS SEE SHEET X.
7. FOR BEARING DETAILS SEE SHEET X THRU X.
8. EXISTING STEEL DIAPHRAGM (NOT SHOWN) TO REMAIN AND BE ENCASED IN CONCRETE END DIAPHRAGM.
9. END DIAPHRAGMS SHALL BE CLASS H CONCRETE. ABUTMENT PEDESTALS AND WINGWALLS SHALL BE CLASS B CONCRETE.
10. REBAR CLEAR COVER SHALL BE 2" UNLESS OTHERWISE NOTES.

NO.	REVISION	DATE	BY

WEST VIRGINIA DEPARTMENT OF TRANSPORTATION
DIVISION OF HIGHWAYS
ENGINEERING DIVISION

I-64 OVER KANAWHA RIVER
EUGENE A. CARTER MEMORIAL BRIDGE +3

SUBSTRUCTURE REPAIRS ABUTMENT F PROPOSED (1 OF 4)

DESIGNED	DATE
LYH	12/25
DRAWN	
DJC	12/25
CHECKED	
REVIEWED	

Mead & Hunt

MEAD & HUNT INC.
CONSULTING ENGINEERS
CHARLESTON, WV
304-345-6712

SHEET OF

BRIDGE NO. 2563.6

1420djc $DD-MMM-YYYY HH:MM$ X:\324160025191 1.01\TECH\Structures\Ramp F\sheets\str_abt_003_Ramp F_Eugene Carter Memorial Bridge.dgn

PROJECT NUMBERS		DISTRICT	COUNTY	SHEET NO.	TOTAL
STATE	FEDERAL				
S320-64-57.44 00	NHPP-0064 (497)D	1	KANAWHA		

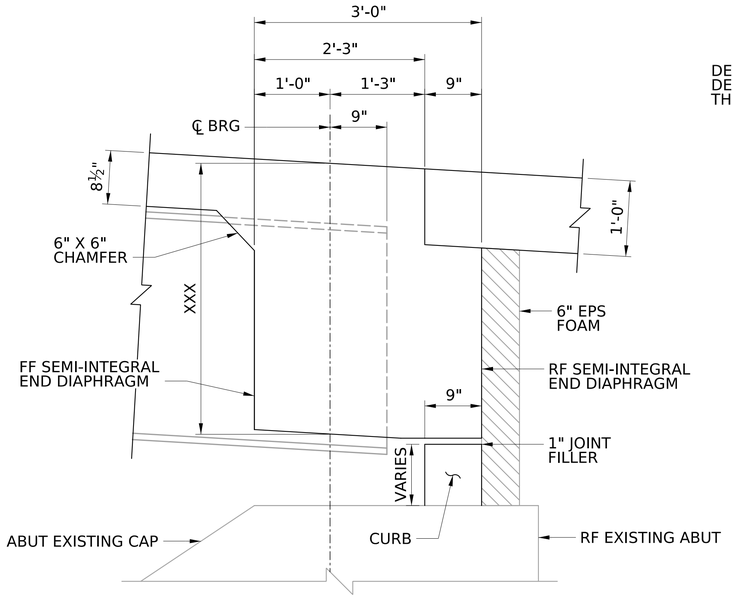

SECTION A-A

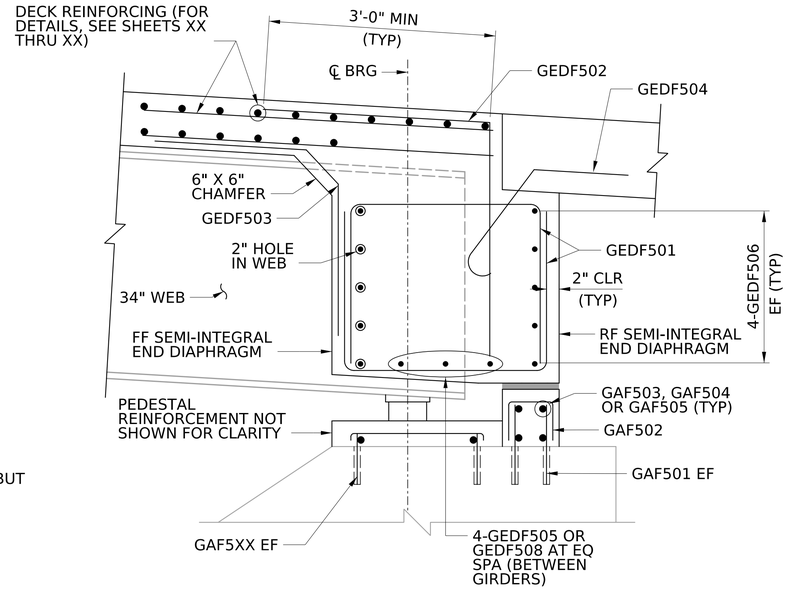

SECTION B-B

ABUTMENT F QUANTITIES

ITEM NO	DESCRIPTION	UNIT	QUANTITIES
601002-001	CLASS B CONCRETE	CY	X
601009-001	CLASS H CONCRETE	CY	X
	INCIDENTAL ITEMS (FOR INFORMATION ONLY)		
	NEOPRENE SHEETING	SF	X
	HOLE IN EXISTING STEEL WEBS	EA	X
601019-001	CONCRETE PROTECTIVE COATING	SF	X
601037-001	DOWEL HOLE, VARIABLE	EA	X
602002-001	EPOXY COATED REINFORCING STEEL BAR	LB	X

CLASS B CONCRETE SHALL BE USED IN THE CURB,
ALL OTHER CONCRETE SHALL BE CLASS H.

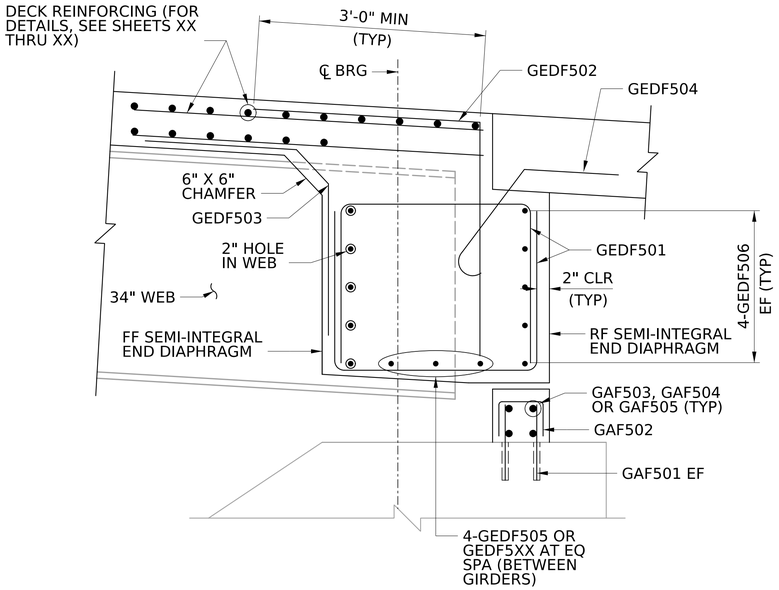

SECTION C-C

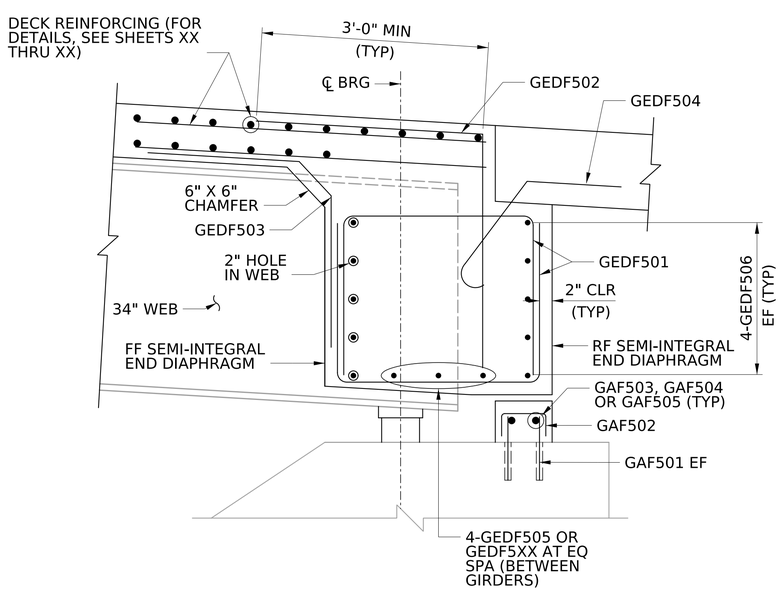

SECTION D-D

NOTES:

1. FOR GENERAL NOTES, SEE SHEETS XX THRU XX.
2. FOR LOCATION OF SECTIONS F-F, G-G, AND H-H, SEE SHEET XX.
3. FOR ADDITIONAL CURB DETAILS, SEE SHEET X.
4. FOR ADDITIONAL NOTES, SEE SHEET X.
5. USE HILTI HIT-RE EPOXY ANCHORING SYSTEM (OR APPROVED EQUAL) IN DOWEL HOLES, USE THE GREATER OF MINIMUM EMBEDMENT SHOWN ON PLANS OR IN ACCORDANCE WITH MANUFACTURER'S INSTRUCTIONS. PROVIDE HOLE DIAMETER IN ACCORDANCE WITH THE MANUFACTURER'S INSTRUCTIONS.

NO.	REVISION	DATE	BY

WEST VIRGINIA DEPARTMENT OF TRANSPORTATION
DIVISION OF HIGHWAYS
ENGINEERING DIVISION

I-64 OVER KANAWHA RIVER
EUGENE A. CARTER MEMORIAL BRIDGE +3
SUPERSTRUCTURE REPAIRS
ABUTMENT F PROPOSED (2 OF 4)

DESIGNED	DATE
LYH	12/25
DRAWN	
DJC	12/25
CHECKED	
REVIEWED	

6 0 6 12 in.
1" = 1'-0"

Mead & Hunt
MEAD & HUNT INC.
CONSULTING ENGINEERS
CHARLESTON, WV
304-345-6712

SHEET OF
BRIDGE NO. 2563.6

1420djc $DD-MMM-YYYY HH:MM$ X:\32416002\251911.01\TECH\Structures\Ramp F\sheets\str_abt_004_Ramp F_Eugene Carter Memorial Bridge.dgn

PROJECT NUMBERS		DISTRICT	COUNTY	SHEET NO.	TOTAL
STATE	FEDERAL				
S320-64-57.44 00	NHPP-0064 (497)D	1	KANAWHA		

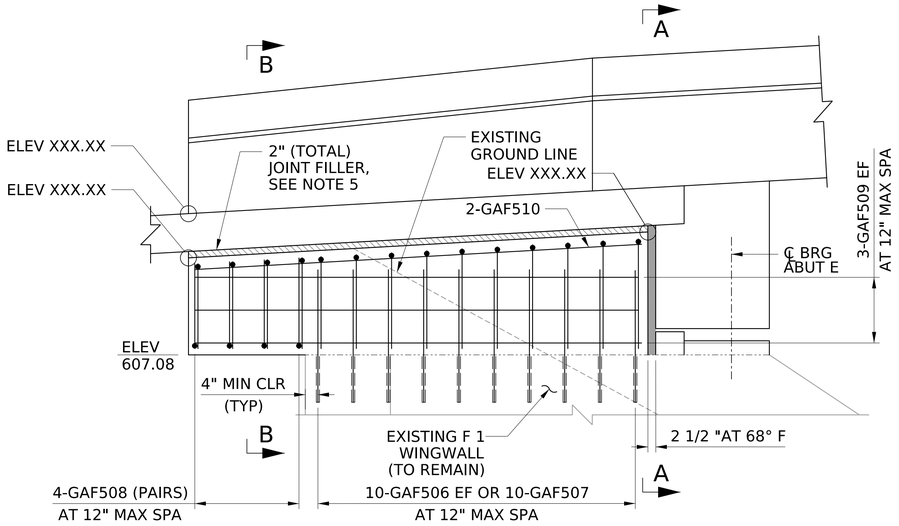

VIEW B-B

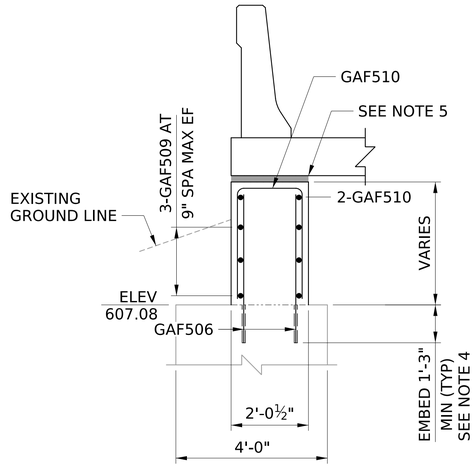

SECTION A-A

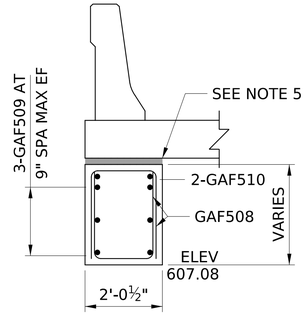

SECTION B-B

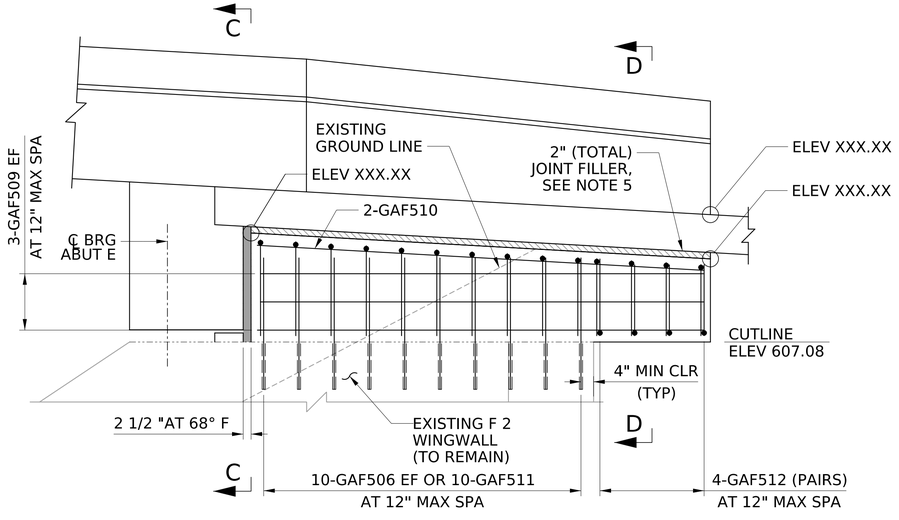

VIEW D-D

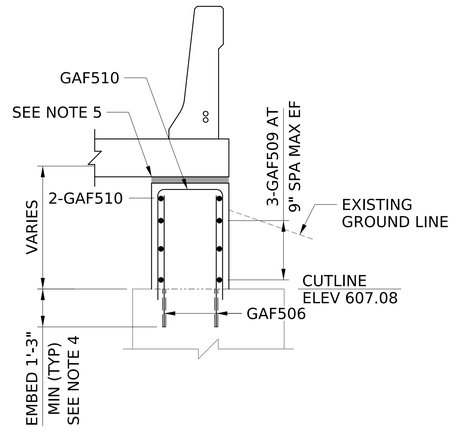

SECTION C-C

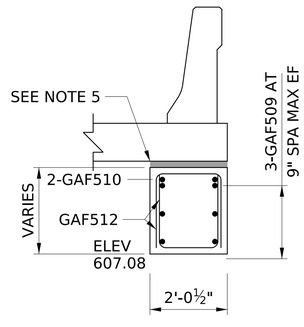

SECTION D-D

NOTES:

1. FOR GENERAL NOTES, SEE SHEETS XX THRU XX.
2. FOR ADDITIONAL ABUTMENT NOTES, SEE SHEET X.
3. FOR REINFORCING SCHEDULE, SEE SHEET X.
4. USE HILTI HIT-RE EPOXY ANCHORING SYSTEM (OR APPROVED EQUAL) IN DOWEL HOLES, USE THE GREATER OF MINIMUM EMBEDMENT SHOWN ON PLANS OR IN ACCORDANCE WITH MANUFACTURER'S INSTRUCTIONS. PROVIDE HOLE DIAMETER IN ACCORDANCE WITH THE MANUFACTURER'S INSTRUCTIONS.
5. FOR DETAILS OF JOINT FILLER BETWEEN REBUILT WINGWALL AND APPROACH SLAB, SEE SHEET X.
6. FOR REINFORCEMENT OF BARRIERS MOUNTED ON WINGWALL, SEE SHEETS X AND X.

1 0 1 2 ft.

½" = 1'-0"

NO.	REVISION	DATE	BY

WEST VIRGINIA DEPARTMENT OF TRANSPORTATION
DIVISION OF HIGHWAYS
ENGINEERING DIVISION

I-64 OVER KANAWHA RIVER
EUGENE A. CARTER MEMORIAL BRIDGE +3

SUBSTRUCTURE REPAIRS
ABUTMENT F PROPOSED (3 OF 4)

DESIGNED	LYH	12/25
DRAWN	DJC	12/25
CHECKED		
REVIEWED		

Mead & Hunt

MEAD & HUNT INC.
CONSULTING ENGINEERS
CHARLESTON, WV
304-345-6712

SHEET
OF
BRIDGE NO.
2563.6

1420djc $$DD-MMM-YYYY HH:MM$ X:\324160025191 1.01\TECH\Structures\Ramp F\sheets\str_abt_005_Ramp F_Eugene Carter Memorial Bridge.dgn

PROJECT NUMBERS		DISTRICT	COUNTY	SHEET NO.	TOTAL
STATE	FEDERAL				
S320-64-57.44 00	NHPP-0064 (497)D	1	KANAWHA		

ABUTMENT F REINFORCING

MARK	NO	LENGTH	WEIGHT	TYPE	A	B	C	D	E	G	J	NOTES
TOTAL REINFORCING			X	LBS								

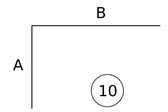

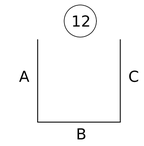

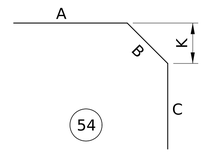

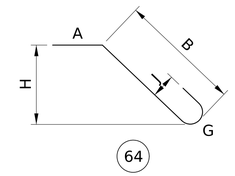

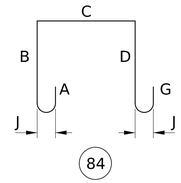

NOTES:

1. FOR GENERAL NOTES, SEE SHEETS XX AND XX.
2. REINFORCING BARS SHALL BE IN ACCORDANCE WITH SECTION 602 OF THE STANDARD SPECIFICATIONS.
3. BENDING OF REINFORCING BARS SHALL BE IN ACCORDANCE WITH SECTION 602.5. RAIL-STEEL BARS SHALL NOT BE FIELD BENT OR STRAIGHTENED.
4. REINFORCING BAR SCHEDULE IS FOR INFORMATION ONLY. VERIFY SCHEDULE PRIOR TO BIDDING AND FABRICATION.
5. NO CORRECTION IN LENGTH FOR BEND CURVATURE IS TO BE MADE.
6. ALL DIMENSIONS ARE OUT-TO-OUT OF BAR EXCEPT "A" AND "G" ON STANDARD 135° AND 180° HOOKS, AND "R" WHICH IS SHOWN TO THE INSIDE OF THE BAR.
7. IF NOT SHOWN, "J" DIMENSIONS ON 180° HOOKS ARE STANDARD HOOKS.
8. NUMBERS IN CIRCLES INDICATE BAR TYPE.
9. UNLESS NOTED OTHERWISE, REINFORCING BARS SHALL BE AASHTO M31 GRADE 60 AND SHALL BE CONTINUOUS HOT-DIP GALVANIZED IN ACCORDANCE WITH ASTM A1094 OR ASTM A767, PAYABLE UNDER ITEM 602002-003 "GALVANIZED REINFORCING STEEL".

NO.	REVISION	DATE	BY

WEST VIRGINIA DEPARTMENT OF TRANSPORTATION
DIVISION OF HIGHWAYS
ENGINEERING DIVISION

I-64 OVER KANAWHA RIVER
EUGENE A. CARTER MEMORIAL BRIDGE +3
SUBSTRUCTURE REPAIRS
ABUTMENT F PROPOSED (4 OF 4)

DESIGNED	DATE
LYH	12/25
DRAWN	
DJC	12/25
CHECKED	
REVIEWED	

Mead & Hunt

MEAD & HUNT INC.
CONSULTING ENGINEERS
CHARLESTON, WV
304-345-6712

SHEET OF

BRIDGE NO. 2563.6

1420djc $DD-MMM-YYYY HH:MM$ X:\3241600\251911.01\TECH\StructuresRamp F\sheets\str_abt_006_Ramp F_Eugene Carter Memorial Bridge.dgn

PROJECT NUMBERS		DISTRICT	COUNTY	SHEET NO.	TOTAL
STATE	FEDERAL				
S320-64-57.44 00	NHPP-0064 (497)D	1	KANAWHA		

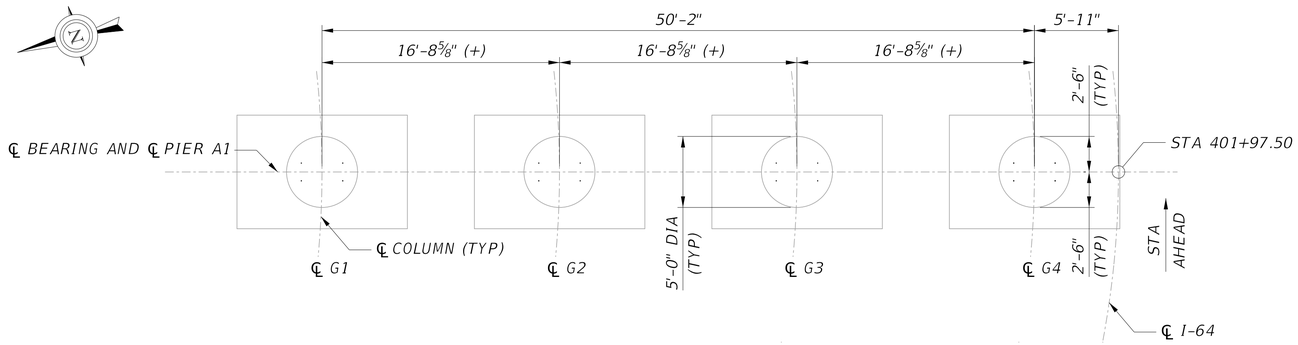

PIER A1 PLAN
(LOOKING STATION AHEAD)

SUMMARY OF CONCRETE REPAIR QUANTITIES			
ID	UNIT	ESTIMATED QUANTITY	REPAIR
1	SF	1	C1
2	SF	1	C1
TOTAL C1 (DOCUMENTED)		2	
TOTAL C1 (ADJUSTED)		3	
TOTAL C2 (DOCUMENTED)		0	
TOTAL C2 (ADJUSTED)		0	

C1 QUANTITY INCLUDES BOTH C1B AND C1C REPAIRS.

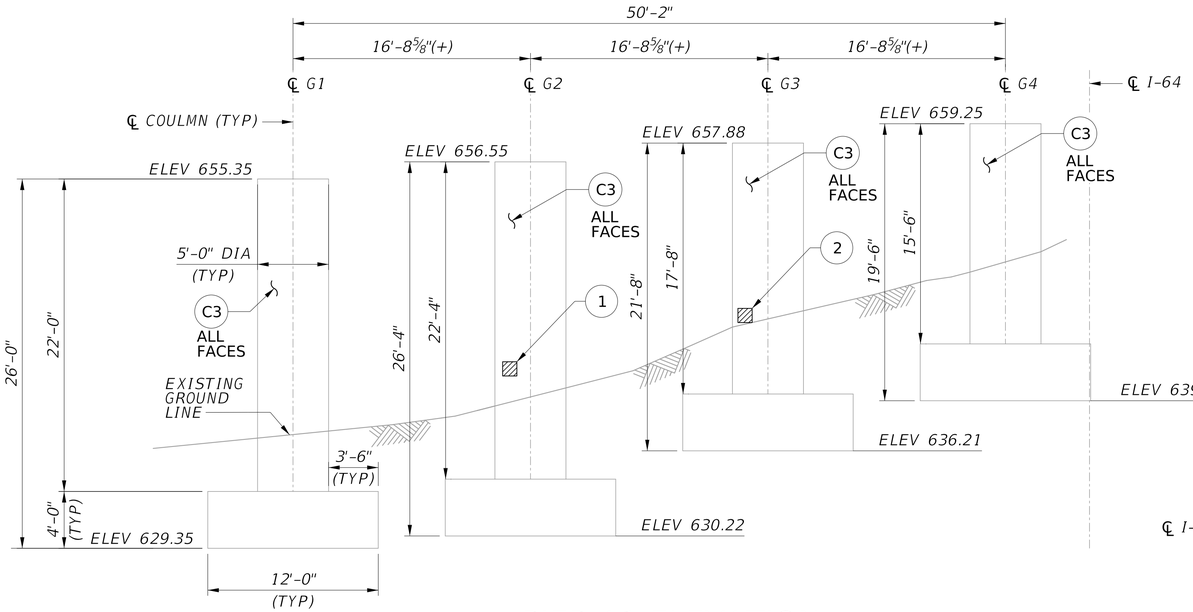

PIER A1 ELEVATION
(LOOKING STATION AHEAD)

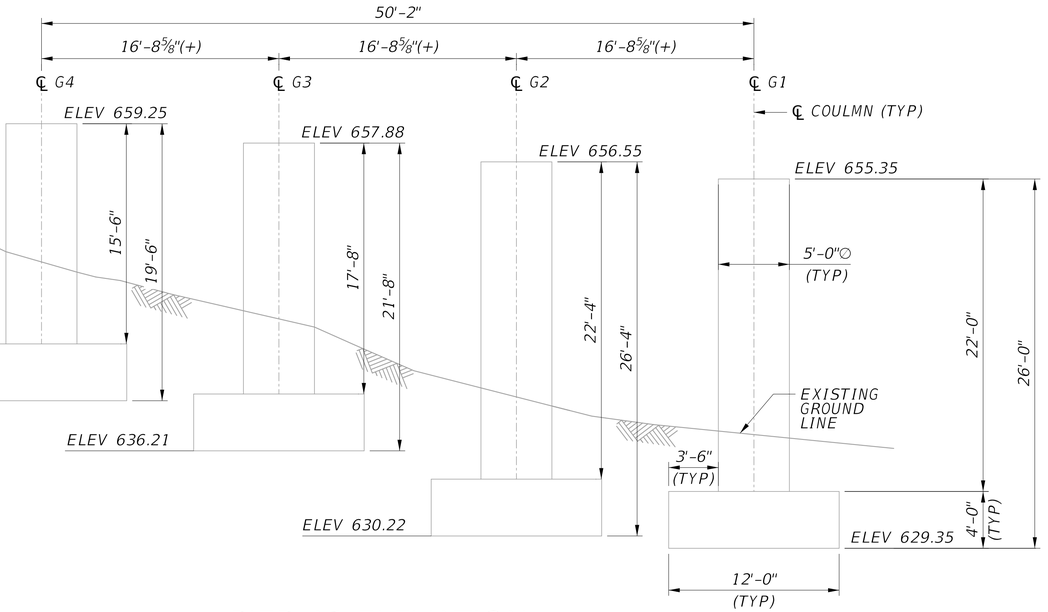

PIER A1 ELEVATION
(LOOKING STATION BACK)

LEGEND:

- CONCRETE REMOVAL
- CONCRETE REPAIR
- (#) REPAIR ID NUMBER

2 0 2 4 6 ft.
3/16" = 1'-0"

NOTES:

1. FOR GENERAL NOTES, SEE SHEETS XX THRU XX.
2. ELEVATIONS SHOWN ARE FROM ORIGINAL CONSTRUCTION PLANS STATIONS CONVERTED TO NAVD 88 DATUM, AND ARE GIVEN AT ℄ PIER.

NO.	REVISION	DATE	BY

WEST VIRGINIA DEPARTMENT OF TRANSPORTATION
DIVISION OF HIGHWAYS
ENGINEERING DIVISION

I-64 OVER KANAWHA RIVER
EUGENE A. CARTER MEMORIAL BRIDGE +3
SUBSTRUCTURE REPAIR
PIER A1

DESIGNED	LJG	DATE	08/25
DRAWN	SCN	DATE	08/25
CHECKED			
REVIEWED			

HDR ENGINEERING INC.
CONSULTING ENGINEERS
CHARLESTON, WV
681-341-6100

SHEET OF
BRIDGE NO. 2563.6

pw://pwhdruseas02.intranet.hdr:HDR_US_East_02/Documents/WV_DOT/WVDOT-Eugene_Carter_Bridge_3/6.0_CAD_BIM/6.2_WIP/HDR/6.2.2_Sheet_Files/23_Structure/2.101 Substructure Repair Pier A1.dgn
$DD-MMM-YYYY HH:MM$
SNOLEN

PROJECT NUMBERS		DISTRICT	COUNTY	SHEET NO.	TOTAL
STATE	FEDERAL				
S320-64-57.44 00	NHPP-0064 (497)D	1	KANAWHA		

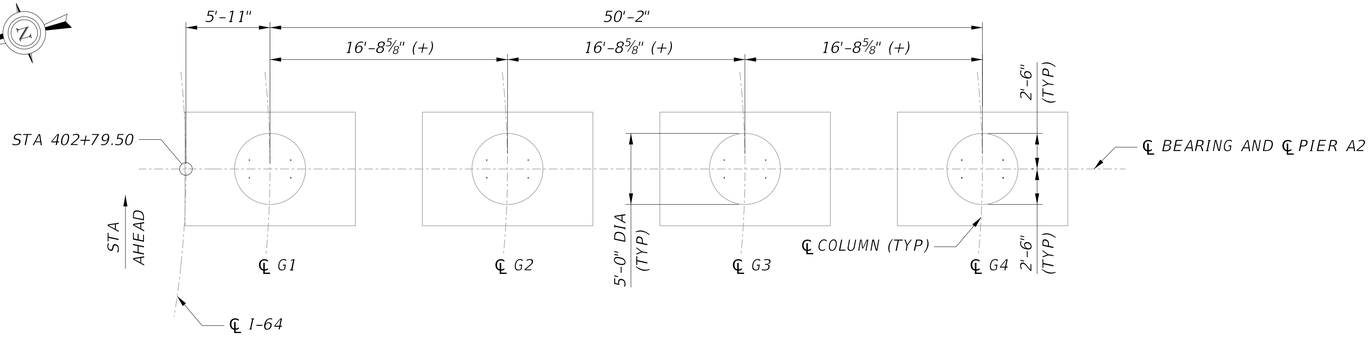

PIER A2 PLAN

(LOOKING STATION AHEAD)

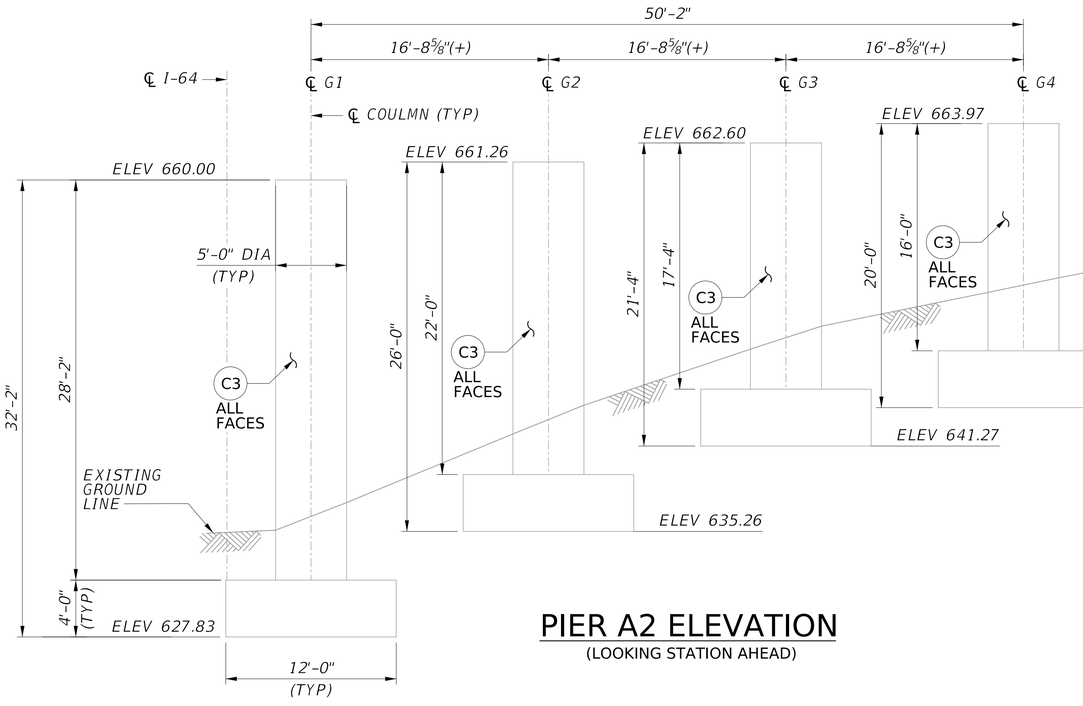

PIER A2 ELEVATION

(LOOKING STATION AHEAD)

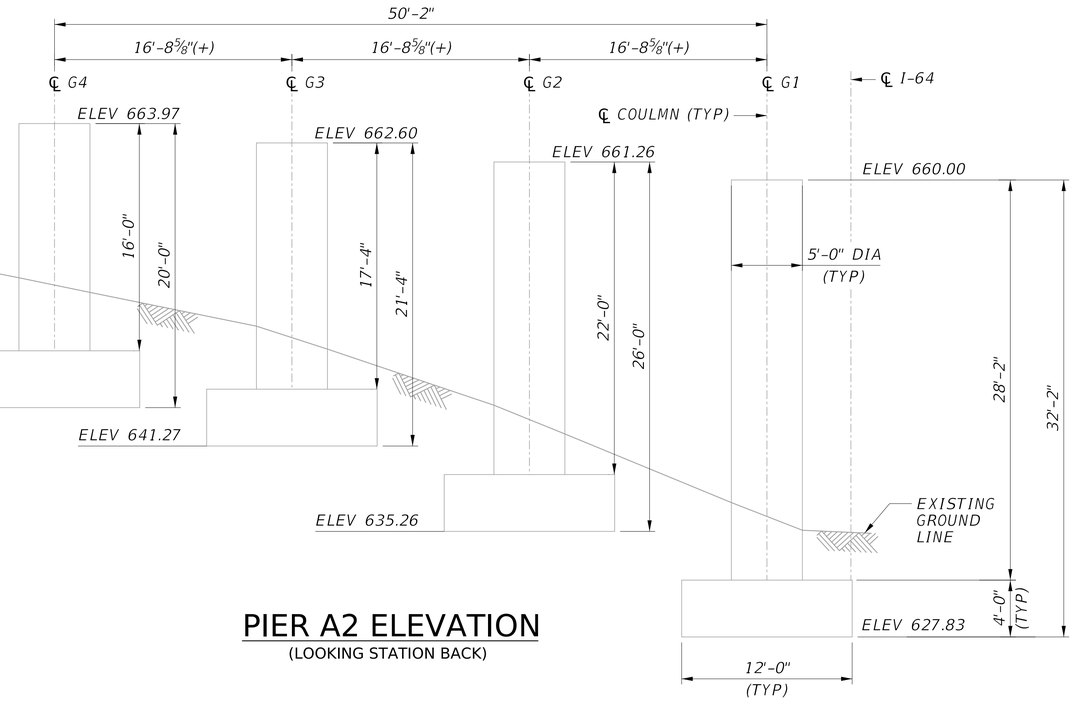

PIER A2 ELEVATION

(LOOKING STATION BACK)

LEGEND:

- CONCRETE REMOVAL
- CONCRETE REPAIR
- (#) REPAIR ID NUMBER

NOTES:

1. FOR GENERAL NOTES, SEE SHEETS XX THRU XX.
2. ELEVATIONS SHOWN ARE FROM ORIGINAL CONSTRUCTION PLANS STATIONS CONVERTED TO NAVD 88 DATUM, AND ARE GIVEN AT ℄ PIER.

2 0 2 4 6 ft.

3/16" = 1'-0"

NO.	REVISION	DATE	BY

WEST VIRGINIA DEPARTMENT OF TRANSPORTATION
DIVISION OF HIGHWAYS
ENGINEERING DIVISION

I-64 OVER KANAWHA RIVER
EUGENE A. CARTER MEMORIAL BRIDGE +3

SUBSTRUCTURE REPAIR
PIER A2

DESIGNED	DATE
LJG	08/25
DRAWN	
AFMO	08/25
CHECKED	
REVIEWED	

HDR ENGINEERING INC.
CONSULTING ENGINEERS
CHARLESTON, WV
681-341-6100

SHEET
OF
BRIDGE NO.
2563.6

SNOLEN $DD-MMM-YYYY HH:MM$ pw://pwhdruseas02.intranet.hdr:HDR_US_East_02/Documents/WV_DOT/WVDOT-Eugene_Carter_Bridge_3/6.0_CAD_BIM/6.2_WIP/HDR/6.2.2_Sheet_Files/23_Structure/2.102 Substructure Repair Pier A2.dgn

PROJECT NUMBERS		DISTRICT	COUNTY	SHEET NO.	TOTAL
STATE	FEDERAL				
S320-64-57.44 00	NHPP-0064 (497)D	1	KANAWHA		

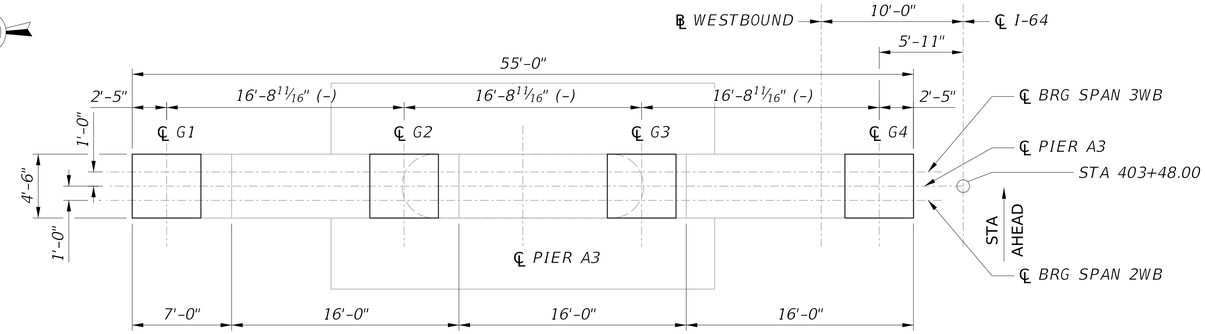

PIER A3 PLAN

(LOOKING STATION AHEAD)

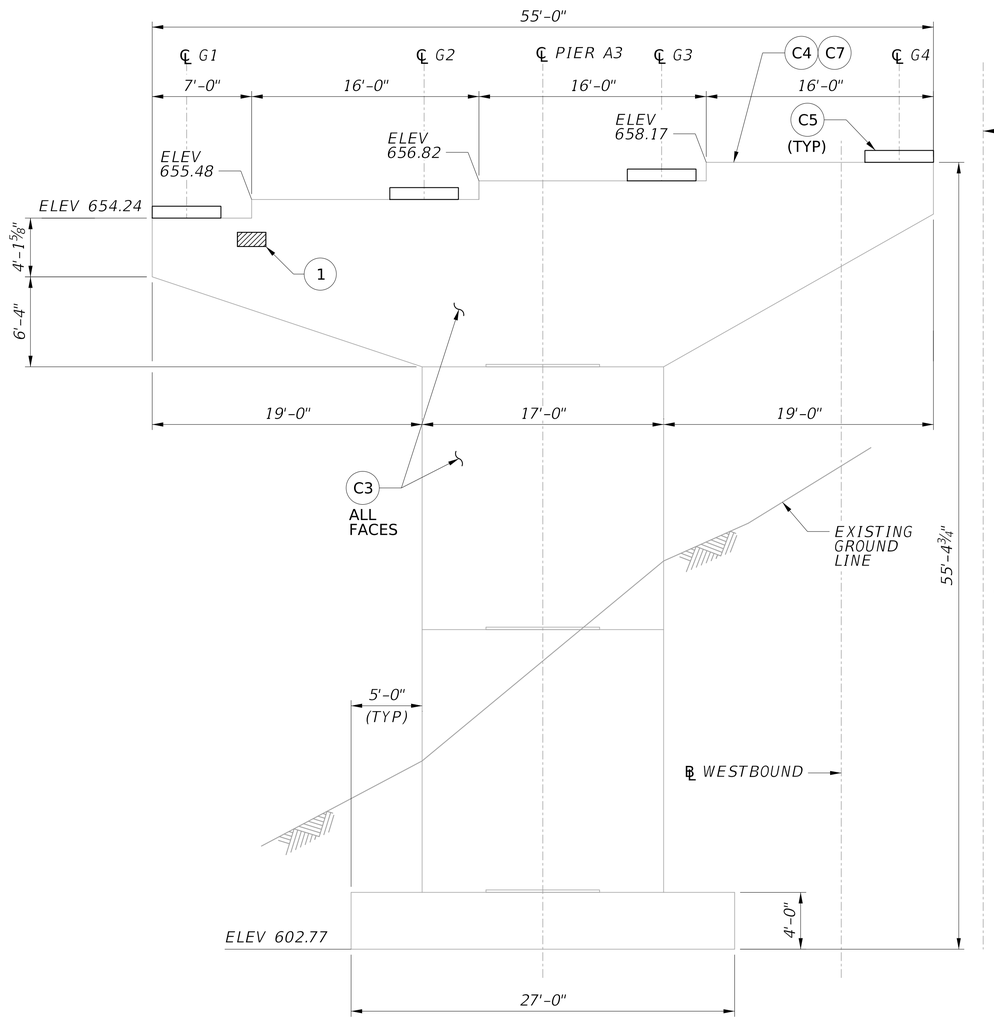

PIER A3 ELEVATION

(LOOKING STATION AHEAD)

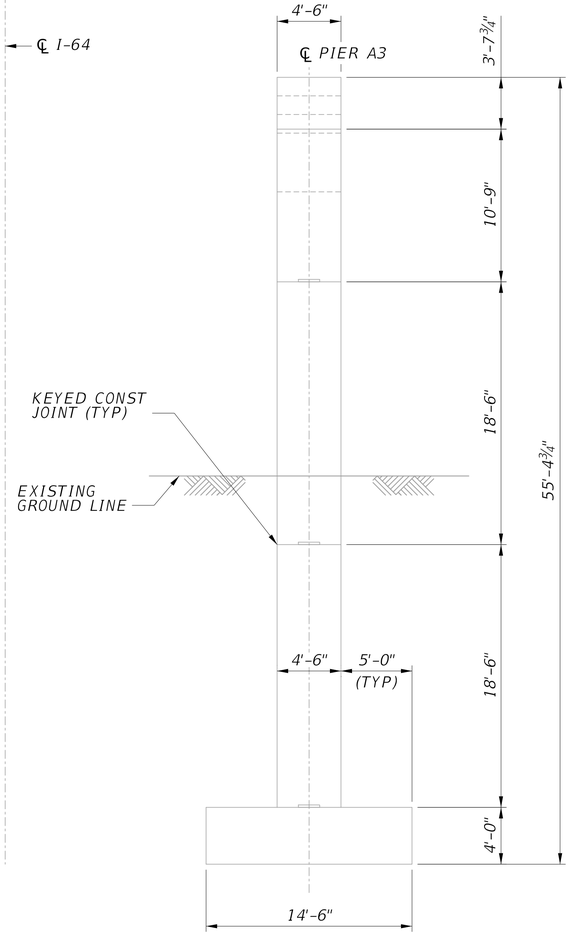

PIER A3 END VIEW

(SOUTH FACE)

SUMMARY OF CONCRETE REPAIR QUANTITIES			
ID	UNIT	ESTIMATED QUANTITY	REPAIR
1	SF	2	C1
2	SF	2	C1
TOTAL C1 (DOCUMENTED)		4	
TOTAL C1 (ADJUSTED)		6	
TOTAL C2 (DOCUMENTED)		0	
TOTAL C2 (ADJUSTED)		0	

C1 QUANTITY INCLUDES BOTH C1B AND C1C REPAIRS.

** DOWNSPOUTING ON THIS PIER TO BE REPLACED

LEGEND:

- CONCRETE REMOVAL
- CONCRETE REPAIR
- (#) REPAIR ID NUMBER

NOTES:

1. FOR GENERAL NOTES, SEE SHEETS XX THRU XX.
2. FOR PIER BEARING PEDESTAL DETAILS, SEE SHEETS XX THRU XX.
3. ELEVATIONS SHOWN ARE FROM ORIGINAL CONSTRUCTION PLANS STATIONS CONVERTED TO NAVD 88 DATUM, AND ARE GIVEN AT ℄ PIER.

2 0 2 4 6 ft.

3/16" = 1'-0"

NO.	REVISION	DATE	BY

WEST VIRGINIA DEPARTMENT OF TRANSPORTATION
DIVISION OF HIGHWAYS
ENGINEERING DIVISION

I-64 OVER KANAWHA RIVER
EUGENE A. CARTER MEMORIAL BRIDGE +3

SUBSTRUCTURE REPAIR PIER A3 (1 OF 2)

DESIGNED	DATE
LJG	08/25
DRAWN	
AFMO	08/25
CHECKED	
REVIEWED	

HDR ENGINEERING INC.
CONSULTING ENGINEERS
CHARLESTON, WV
681-341-6100

SHEET OF

BRIDGE NO. 2563.6

$DD-MMM-YYYY HH:MM$ pw://pwhdruseas02.intranet.hdr:HDR_US_East_02/Documents/WV_DOT/WVDOT-Eugene_Carter_Bridge_3/6.0_CAD_BIM/6.2_WIP/HDR/6.2.2_Sheet_Files/23_Structure/2.103 Substructure Repair Pier A3 (1 of 2).dgn SNOLEN

PROJECT NUMBERS		DISTRICT	COUNTY	SHEET NO.	TOTAL
STATE	FEDERAL				
S320-64-57.44 00	NHPP-0064 (497)D	1	KANAWHA		

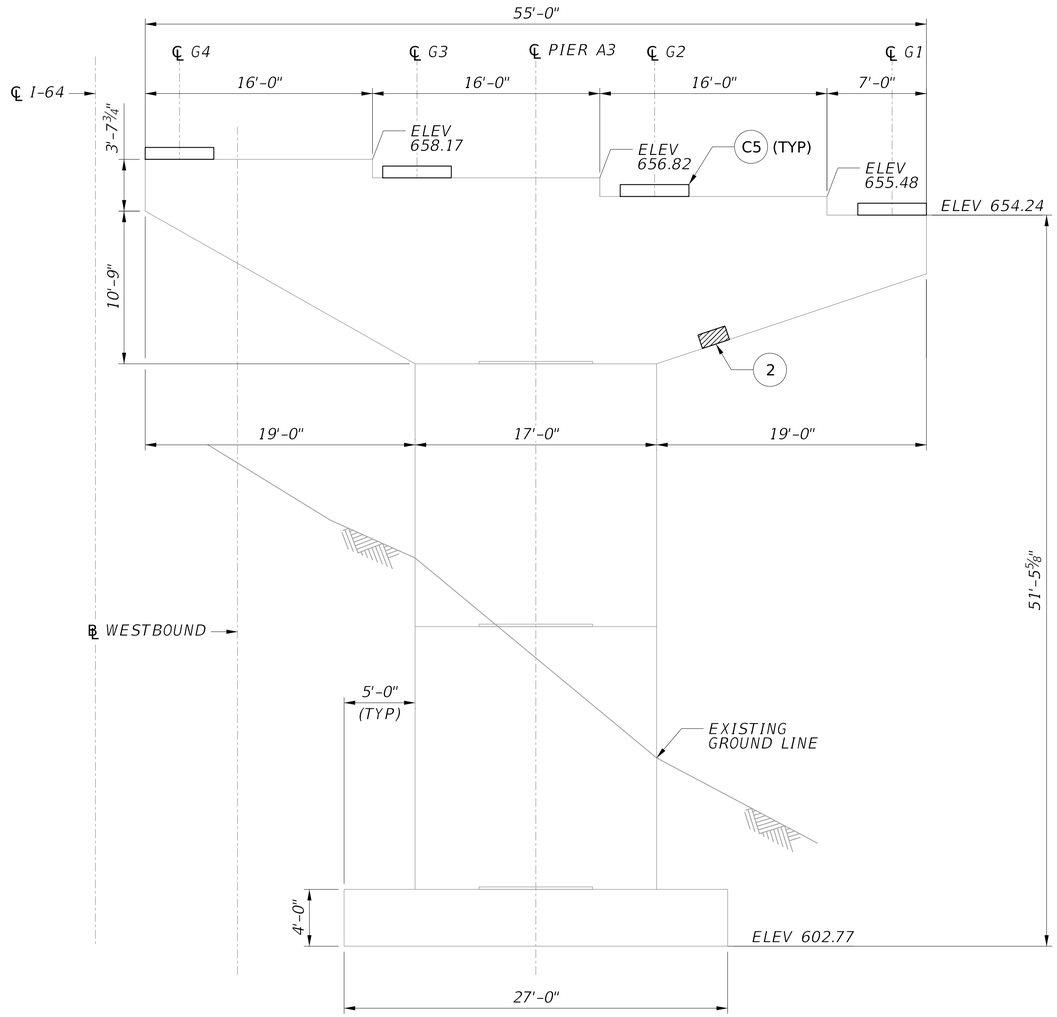

PIER A3 ELEVATION

(LOOKING STATION BACK)
(RAILROAD SIDE)

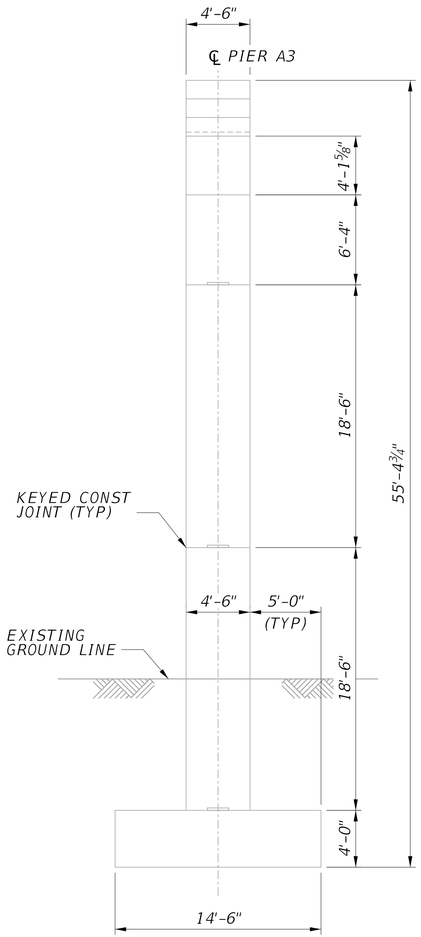

PIER A3 END VIEW

(NORTH FACE)
(END TOWARDS RAILROAD)

LEGEND:

- CONCRETE REMOVAL
- CONCRETE REPAIR
- (#) REPAIR ID NUMBER

2 0 2 4 6 ft.
3/16" = 1'-0"

NO.	REVISION	DATE	BY

WEST VIRGINIA DEPARTMENT OF TRANSPORTATION
DIVISION OF HIGHWAYS
ENGINEERING DIVISION

I-64 OVER KANAWHA RIVER
EUGENE A. CARTER MEMORIAL BRIDGE +3

SUBSTRUCTURE REPAIR PIER A3 (2 OF 2)

DESIGNED	LJG	DATE	08/25
DRAWN	AFMO		08/25
CHECKED			
REVIEWED			

HDR ENGINEERING INC.
CONSULTING ENGINEERS
CHARLESTON, WV
681-341-6100

SHEET OF
BRIDGE NO. 2563.6

SNOLEN $DD-MMM-YYYY HH:MM$ pw://pwhdruseas02.intranet.hdr:HDR_US_East_02/Documents/WV_DOT/WVDOT-Eugene_Carter_Bridge_3/6.0_CAD_BIM/6.2_WIP/HDR/6.2.2_Sheet_Files/23_Structure/2.104 Substructure Repair Pier A3 (2 of 2).dgn

PROJECT NUMBERS		DISTRICT	COUNTY	SHEET NO.	TOTAL
STATE	FEDERAL				
S320-64-57.44 00	NHPP-0064 (497)D	1	KANAWHA		

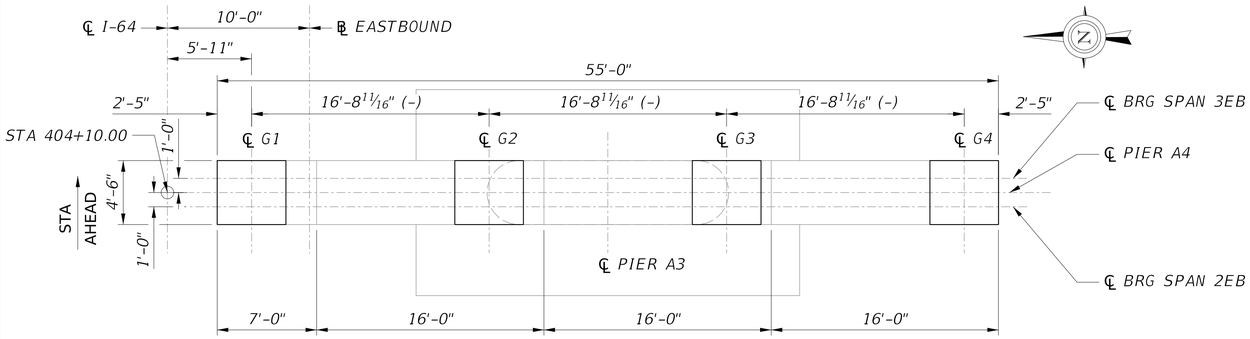

PIER A4 PLAN

(LOOKING STATIONS AHEAD)

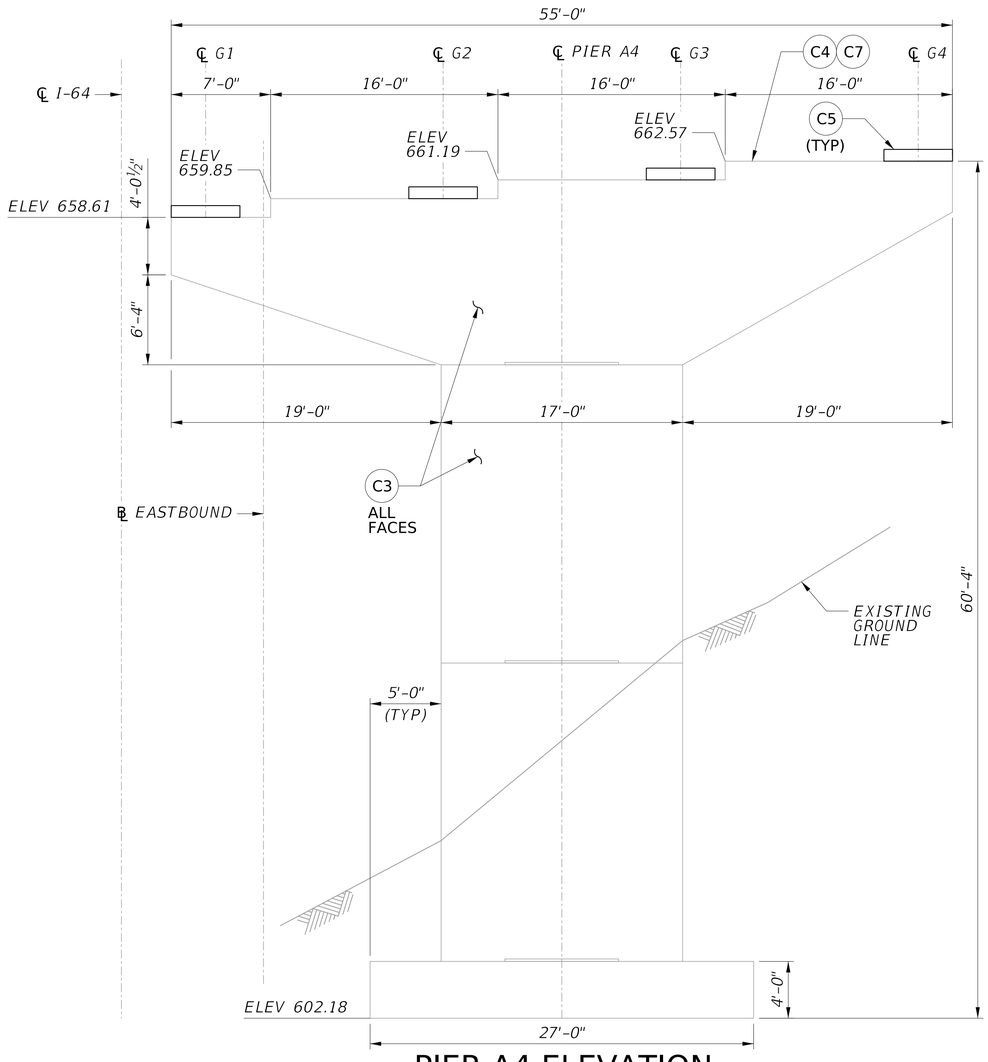

PIER A4 ELEVATION

(LOOKING STATION AHEAD)

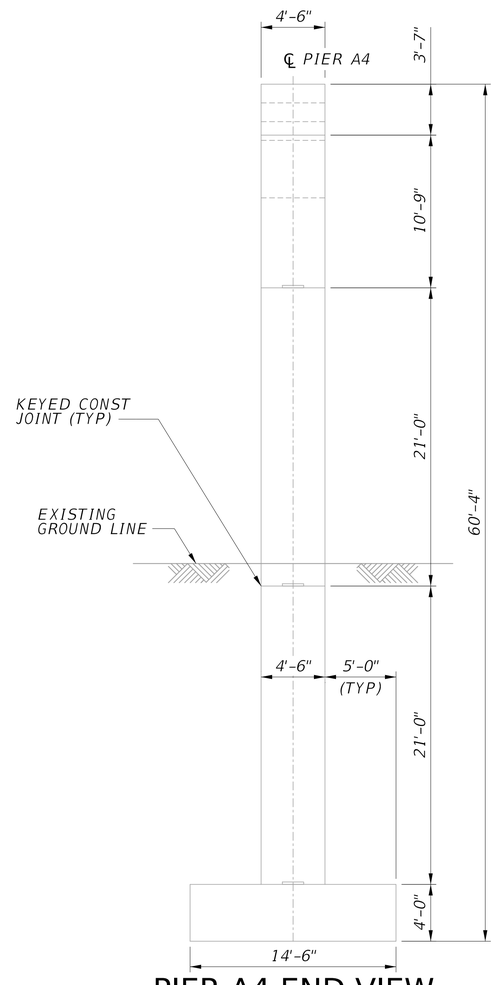

PIER A4 END VIEW

(SOUTH FACE)

** DOWNSPOUTING ON THIS PIER TO BE REPLACED

LEGEND:

- CONCRETE REMOVAL
- CONCRETE REPAIR
- (#) REPAIR ID NUMBER

NOTES:

1. FOR GENERAL NOTES, SEE SHEETS XX THRU XX.
2. FOR PIER BEARING PEDESTAL DETAILS, SEE SHEETS XX THRU XX.
3. ELEVATIONS SHOWN ARE FROM ORIGINAL CONSTRUCTION PLANS STATIONS CONVERTED TO NAVD 88 DATUM, AND ARE GIVEN AT ℄ PIER.

NO.	REVISION	DATE	BY

2 0 2 4 6 ft.

3/16" = 1'-0"

WEST VIRGINIA DEPARTMENT OF TRANSPORTATION
DIVISION OF HIGHWAYS
ENGINEERING DIVISION

I-64 OVER KANAWHA RIVER
EUGENE A. CARTER MEMORIAL BRIDGE +3

SUBSTRUCTURE REPAIR PIER A4 (1 OF 2)

DESIGNED	LJG	08/25
DRAWN	AFMO	08/25
CHECKED		
REVIEWED		

HDR ENGINEERING INC.
CONSULTING ENGINEERS
CHARLESTON, WV
681-341-6100

SHEET OF

BRIDGE NO. 2563.6

SNOLEN $DD-MMM-YYYY HH:MM$ pw://pwhdruseas02.intranet.hdr:HDR_US_East_02/Documents/WV_DOT/WVDOT-Eugene_Carter_Bridge_3/6.0_CAD_BIM/6.2_WIP/HDR/6.2.2_Sheet_Files/23_Structure/2.105 Substructure Repair Pier A4 (1 of 2).dgn

PROJECT NUMBERS		DISTRICT	COUNTY	SHEET NO.	TOTAL
STATE	FEDERAL				
S320-64-57.44 00	NHPP-0064 (497)D	1	KANAWHA		

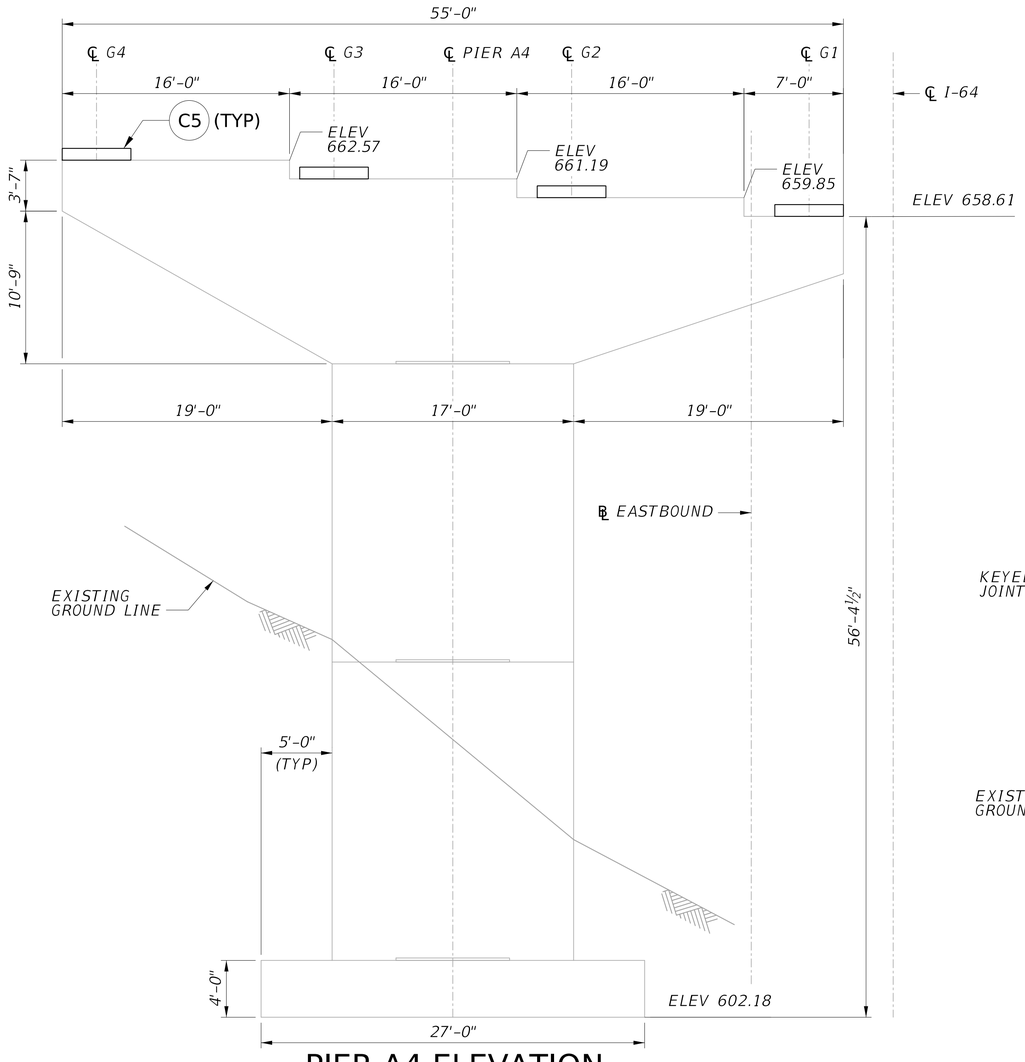

PIER A4 ELEVATION

(LOOKING STATION BACK)
(RAILROAD SIDE)

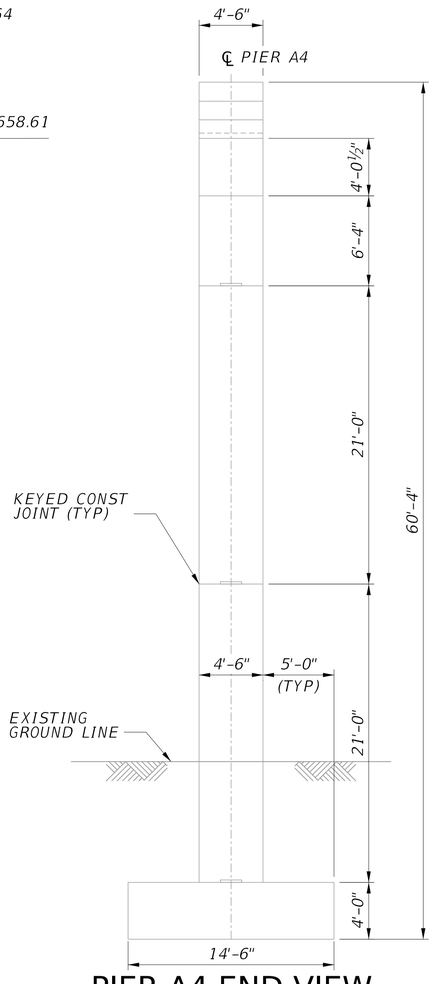

PIER A4 END VIEW

(NORTH FACE)
(END TOWARDS RAILROAD)

LEGEND:

- CONCRETE REMOVAL
- CONCRETE REPAIR
- (#) REPAIR ID NUMBER

2 0 2 4 6 ft.
3/16" = 1'-0"

NO.	REVISION	DATE	BY

WEST VIRGINIA DEPARTMENT OF TRANSPORTATION
DIVISION OF HIGHWAYS
ENGINEERING DIVISION

I-64 OVER KANAWHA RIVER
EUGENE A. CARTER MEMORIAL BRIDGE +3

SUBSTRUCTURE REPAIR
PIER A4 (2 OF 2)

DESIGNED	LJG	DATE	08/25
DRAWN	AFMO		08/25
CHECKED			
REVIEWED			

HDR ENGINEERING INC.
CONSULTING ENGINEERS
CHARLESTON, WV
681-341-6100

SHEET OF
BRIDGE NO. 2563.6

SNOLEN $DD-MMM-YYYY HH:MM$ pw://pwhdruseas02.intranet.hdr:HDR_US_East_02/Documents/WV_DOT/WVDOT-Eugene_Carter_Bridge_3/6.0_CAD_BIM/6.2_WIP/HDR/6.2.2_Sheet_Files/23_Structure/2.106 Substructure Repair Pier A4 (2 of 2).dgn

PROJECT NUMBERS		DISTRICT	COUNTY	SHEET NO.	TOTAL
STATE	FEDERAL				
S320-64-57.44 00	NHPP-0064 (497)D	1	KANAWHA		

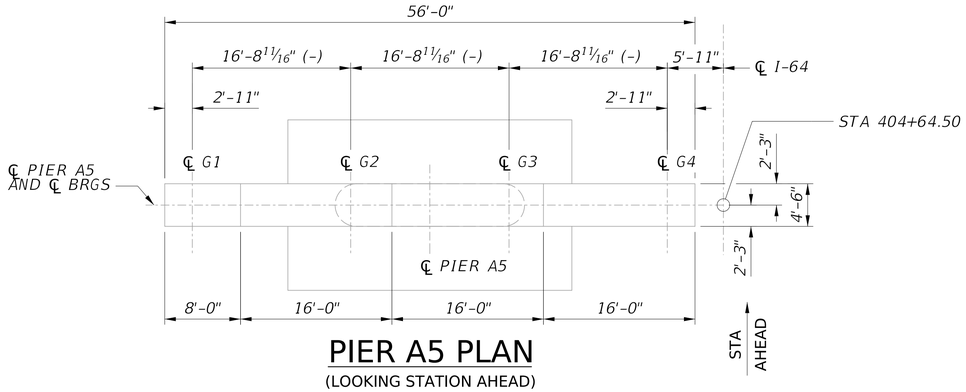

PIER A5 PLAN

(LOOKING STATION AHEAD)

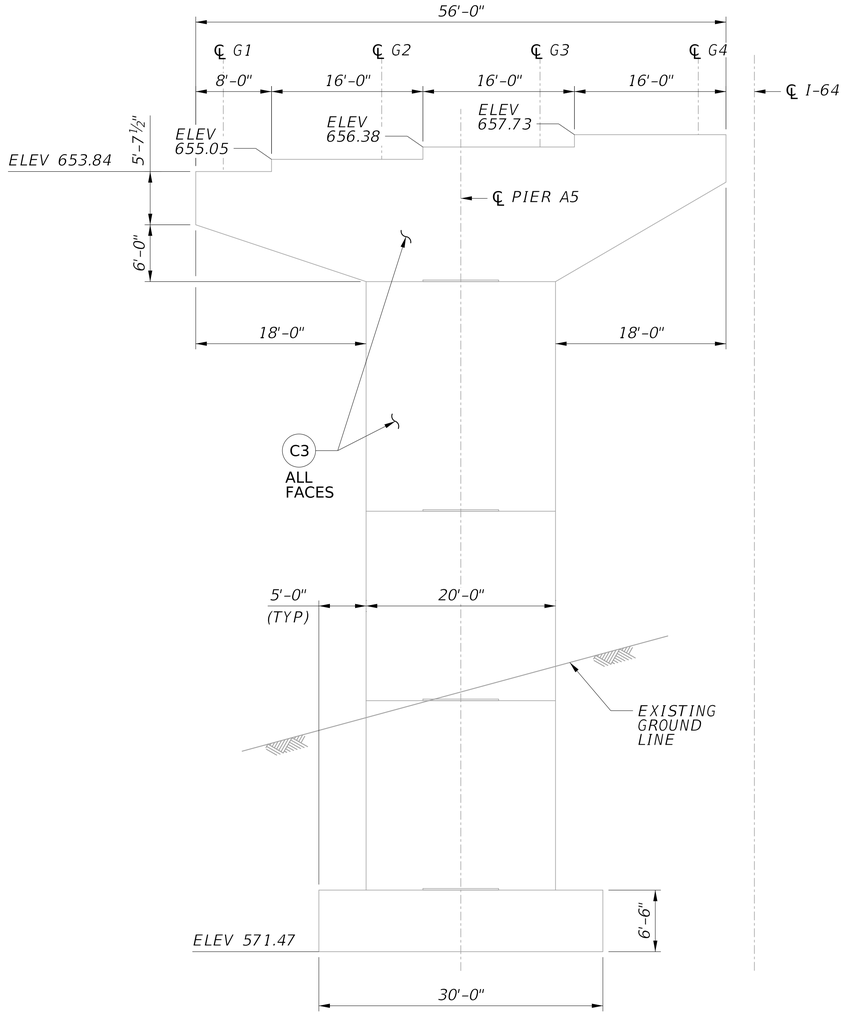

PIER A5 ELEVATION

(LOOKING STATION AHEAD)
(RAILROAD SIDE)

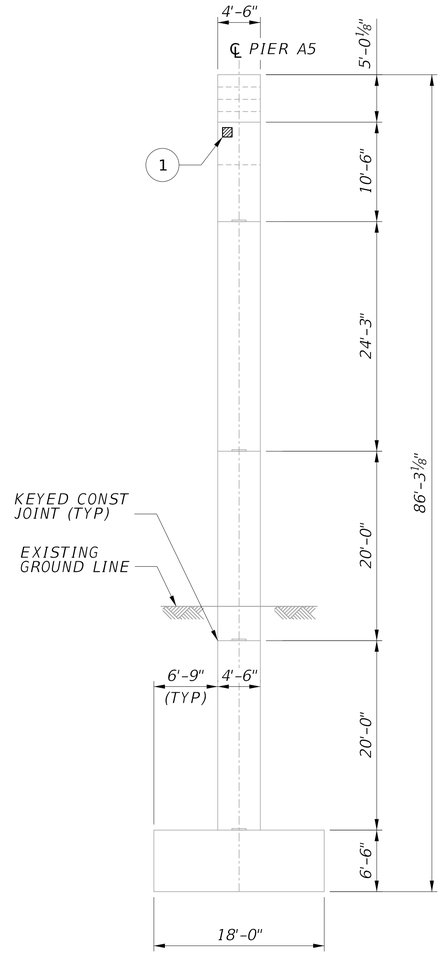

PIER A5 END VIEW

(SOUTH FACE)
(END TOWARDS RAILROAD)

SUMMARY OF CONCRETE REPAIR QUANTITIES			
ID	UNIT	ESTIMATED QUANTITY	REPAIR
1	SF	1	C1
TOTAL C1 (DOCUMENTED)		1	
TOTAL C1 (ADJUSTED)		2	
TOTAL C2 (DOCUMENTED)		0	
TOTAL C2 (ADJUSTED)		0	

C1 QUANTITY INCLUDES BOTH C1B AND C1C REPAIRS.

** DOWNSPOUTING ON THIS PIER TO BE REPLACED

LEGEND:

- CONCRETE REMOVAL
- CONCRETE REPAIR
- (#) REPAIR ID NUMBER

NOTES:

1. FOR GENERAL NOTES, SEE SHEETS XX THRU XX.
2. ELEVATIONS SHOWN ARE FROM ORIGINAL CONSTRUCTION PLANS STATIONS CONVERTED TO NAVD 88 DATUM, AND ARE GIVEN AT ℄ PIER.

2 0 4 8 ft.

⅛" = 1'-0"

NO.	REVISION	DATE	BY

WEST VIRGINIA DEPARTMENT OF TRANSPORTATION
DIVISION OF HIGHWAYS
ENGINEERING DIVISION

I-64 OVER KANAWHA RIVER
EUGENE A. CARTER MEMORIAL BRIDGE +3

SUBSTRUCTURE REPAIR
PIER A5 (1 OF 2)

DESIGNED	DATE
LJG	08/25
DRAWN	
AFMO	08/25
CHECKED	
REVIEWED	

HDR ENGINEERING INC.
CONSULTING ENGINEERS
CHARLESTON, WV
681-341-6100

SHEET OF

BRIDGE NO. 2563.6

SNOLEN $DD-MMM-YYYY HH:MM$ pw://pwhdruseas02.Intranet.hdr:HDR_US_East_02/Documents/WV_DOT/WVDOT-Eugene_Carter_Bridge_3/6.0_CAD_BIM/6.2_WIP/HDR/6.2.2_Sheet_Files/23_Structure/2.107 Substructure Repair Pier A5 (1 of 2).dgn

PROJECT NUMBERS		DISTRICT	COUNTY	SHEET NO.	TOTAL
STATE	FEDERAL				
S320-64-57.44 00	NHPP-0064 (497)D	1	KANAWHA		

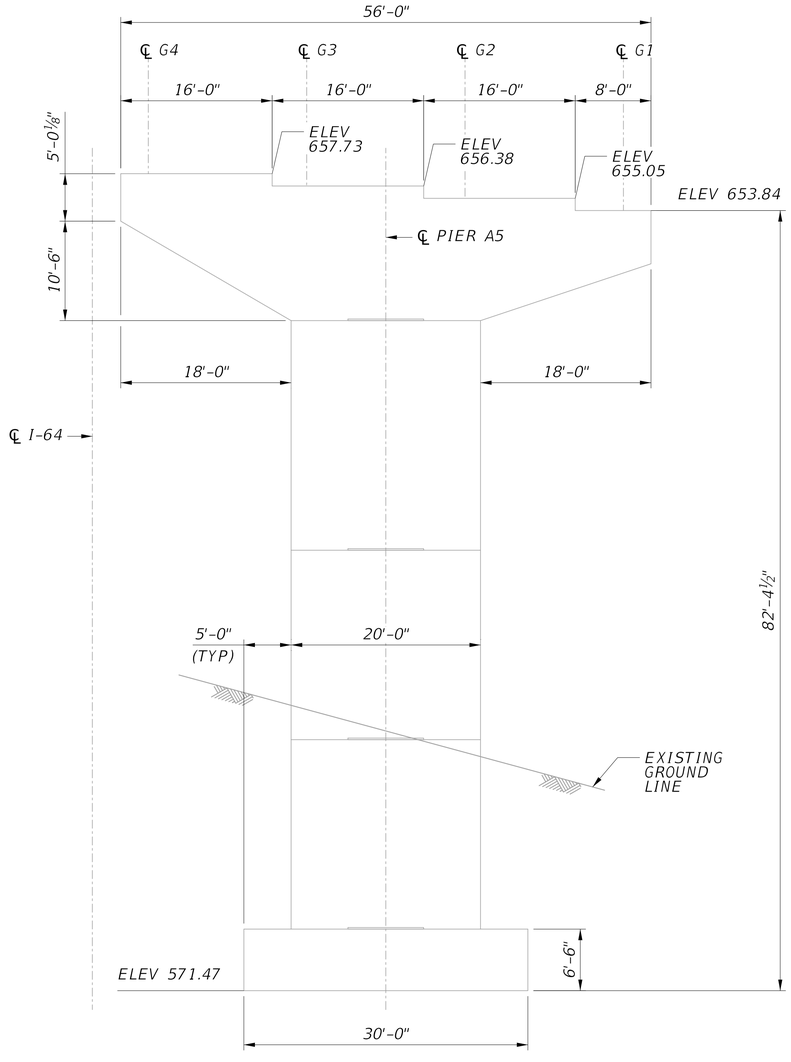

PIER A5 ELEVATION

(LOOKING STATION BACK)

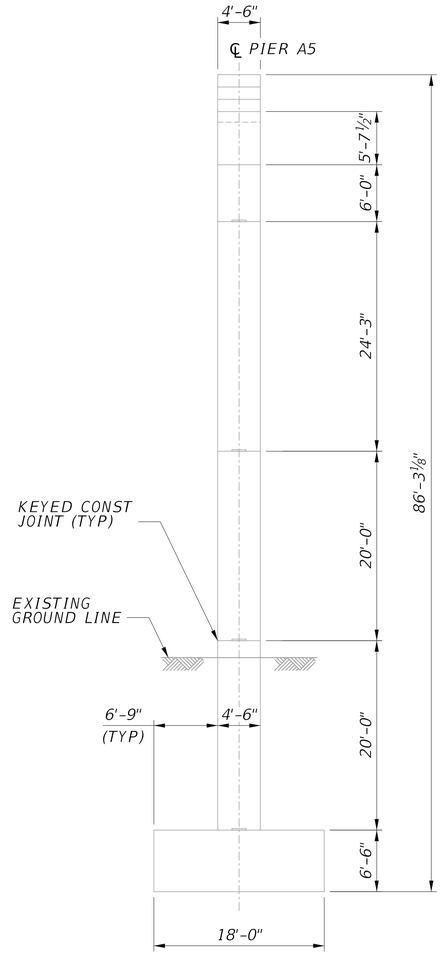

PIER A5 END VIEW

(NORTH FACE)

LEGEND:

- CONCRETE REMOVAL
- CONCRETE REPAIR
- (#) REPAIR ID NUMBER

2 0 4 8 ft.

⅛" = 1'-0"

NO.	REVISION	DATE	BY

WEST VIRGINIA DEPARTMENT OF TRANSPORTATION
DIVISION OF HIGHWAYS
ENGINEERING DIVISION

I-64 OVER KANAWHA RIVER
EUGENE A. CARTER MEMORIAL BRIDGE +3

SUBSTRUCTURE REPAIR
PIER A5 (2 OF 2)

DESIGNED	LJG	08/25
DRAWN	AFMO	08/25
CHECKED		
REVIEWED		

HDR ENGINEERING INC.
CONSULTING ENGINEERS
CHARLESTON, WV
681-341-6100

SHEET OF

BRIDGE NO. 2563.6

SNOLEN $DD-MMM-YYYY HH:MM$ pw://pwhdruseas02.Intranet.hdr:HDR_US_East_02/Documents/WV_DOT/WVDOT-Eugene_Carter_Bridge_3/6.0_CAD_BIM/6.2_WIP/HDR/6.2.2_Sheet_Files/23_Structure/2.108 Substructure Repair Pier A5 (2 of 2).dgn

PROJECT NUMBERS		DISTRICT	COUNTY	SHEET NO.	TOTAL
STATE	FEDERAL				
S320-64-57.44 00	NHPP-0064 (497)D	1	KANAWHA		

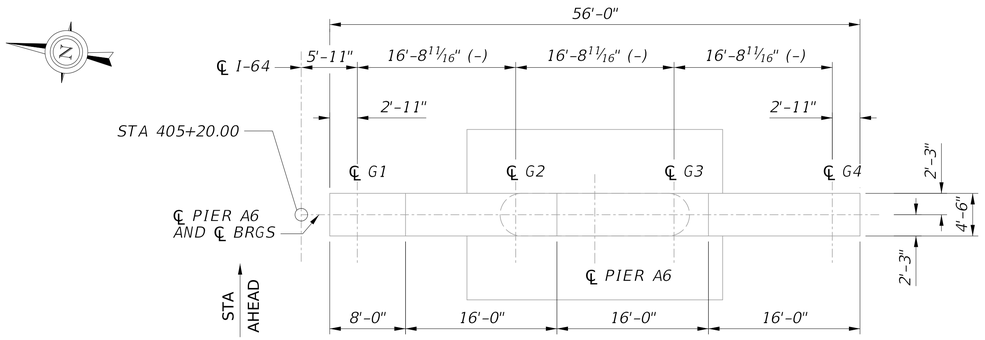

PIER A6 PLAN

(LOOKING STATION AHEAD)

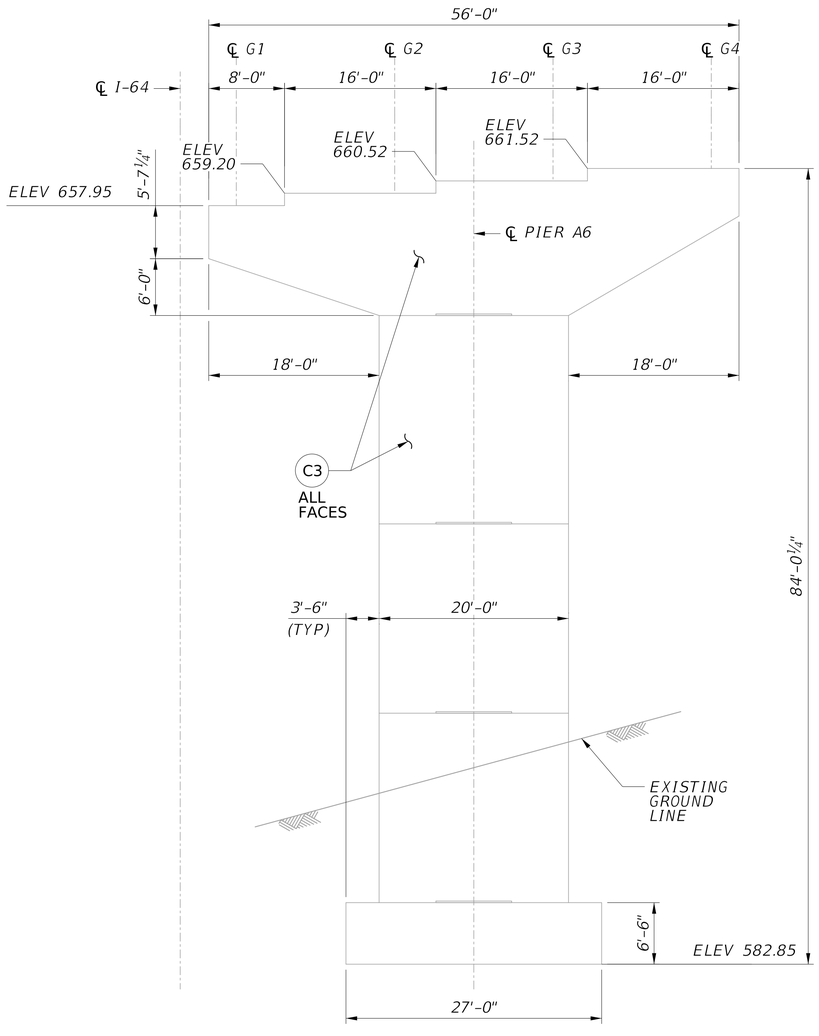

PIER A6 ELEVATION

(LOOKING STATION AHEAD)
(RAILROAD SIDE)

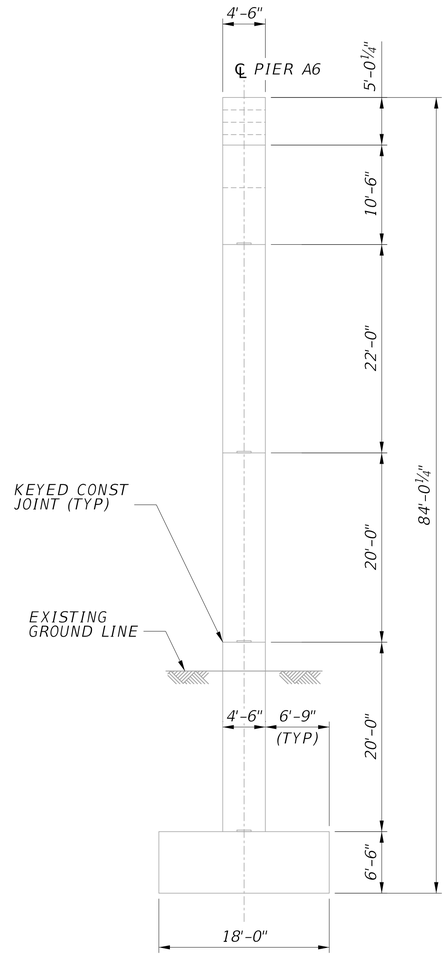

PIER A6 END VIEW

(SOUTH FACE)
(END TOWARDS RAILROAD)

** DOWNSPOUTING ON THIS PIER TO BE REPLACED

LEGEND:

- CONCRETE REMOVAL
- CONCRETE REPAIR
- (#) REPAIR ID NUMBER

NOTES:

1. FOR GENERAL NOTES, SEE SHEETS XX THRU XX.
2. ELEVATIONS SHOWN ARE FROM ORIGINAL CONSTRUCTION PLANS STATIONS CONVERTED TO NAVD 88 DATUM, AND ARE GIVEN AT ℄ PIER.

2 0 4 8 ft.

⅛" = 1'-0"

NO.	REVISION	DATE	BY

WEST VIRGINIA DEPARTMENT OF TRANSPORTATION
DIVISION OF HIGHWAYS
ENGINEERING DIVISION

I-64 OVER KANAWHA RIVER
EUGENE A. CARTER MEMORIAL BRIDGE +3

SUBSTRUCTURE REPAIR PIER A6 (1 OF 2)

DESIGNED	LJG	08/25
DRAWN	AFMO	08/25
CHECKED		
REVIEWED		

HDR ENGINEERING INC.
CONSULTING ENGINEERS
CHARLESTON, WV
681-341-6100

SHEET OF

BRIDGE NO. 2563.6

SNOLEN $DD-MMM-YYYY HH:MM$ pw://pwhdruseas02.Intranet.hdr:HDR_US_East_02/Documents/WV_DOT/WVDOT-Eugene_Carter_Bridge_3/6.0_CAD_BIM/6.2_WIP/HDR/6.2.2_Sheet_Files/23_Structure/2.109 Substructure Repair Pier A6 (1 of 2).dgn

PROJECT NUMBERS		DISTRICT	COUNTY	SHEET NO.	TOTAL
STATE	FEDERAL				
S320-64-57.44 00	NHPP-0064 (497)D	1	KANAWHA		

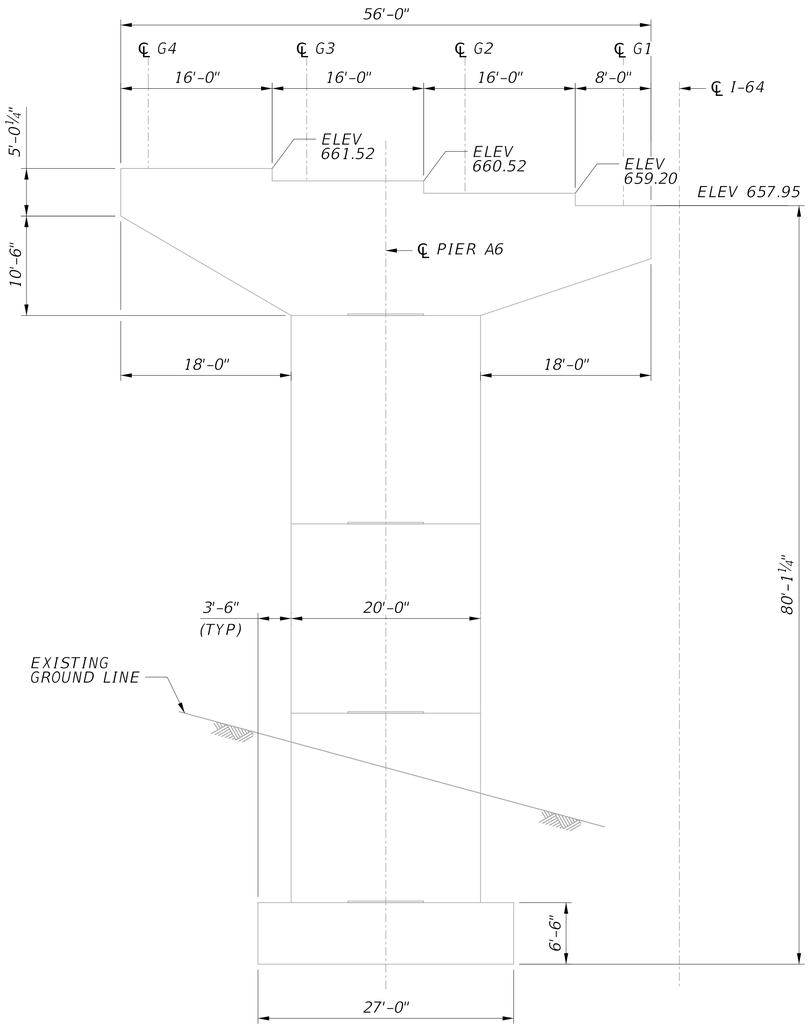

PIER A6 ELEVATION

(LOOKING STATION BACK)

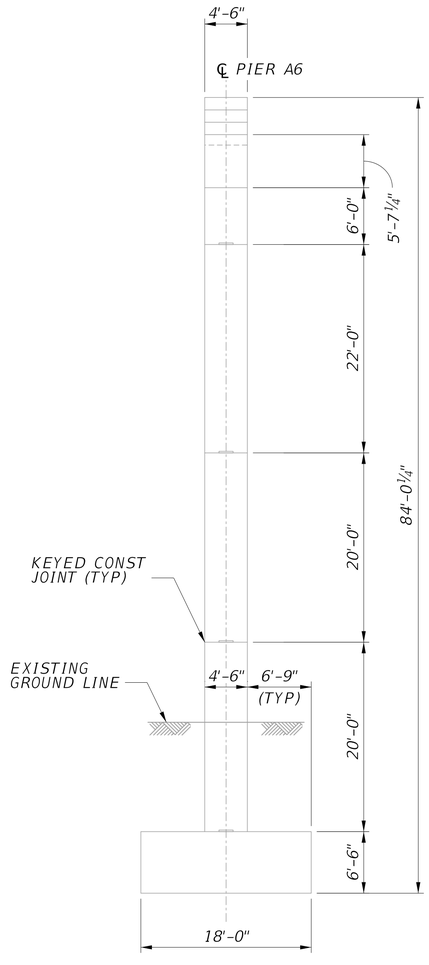

PIER A6 END VIEW

(NORTH FACE)

LEGEND:

- CONCRETE REMOVAL
- CONCRETE REPAIR
- (#) REPAIR ID NUMBER

2 0 4 8 ft.

⅛" = 1'-0"

NO.	REVISION	DATE	BY

WEST VIRGINIA DEPARTMENT OF TRANSPORTATION
DIVISION OF HIGHWAYS
ENGINEERING DIVISION

I-64 OVER KANAWHA RIVER
EUGENE A. CARTER MEMORIAL BRIDGE +3

SUBSTRUCTURE REPAIR
PIER A6 (2 OF 2)

DESIGNED	LJG
DATE	08/25
DRAWN	AFMO
DATE	08/25
CHECKED	
REVIEWED	

HDR ENGINEERING INC.
CONSULTING ENGINEERS
CHARLESTON, WV
681-341-6100

SHEET OF

BRIDGE NO. 2563.6

SNOLEN $DD-MMM-YYYY HH:MM$ pw://pwhdruseas02.bentley.hdr:HDR_US_East_02/Documents/WV_DOT/WVDOT-Eugene_Carter_Bridge_3/6.0_CAD_BIM/6.2_WIP/HDR/6.2.2_Sheet_Files/23_Structure/2.110 Substructure Repair Pier A6 (2 of 2).dgn

PROJECT NUMBERS		DISTRICT	COUNTY	SHEET NO.	TOTAL
STATE	FEDERAL				
S320-64-57.44 00	NHPP-0064 (497)D	1	KANAWHA		

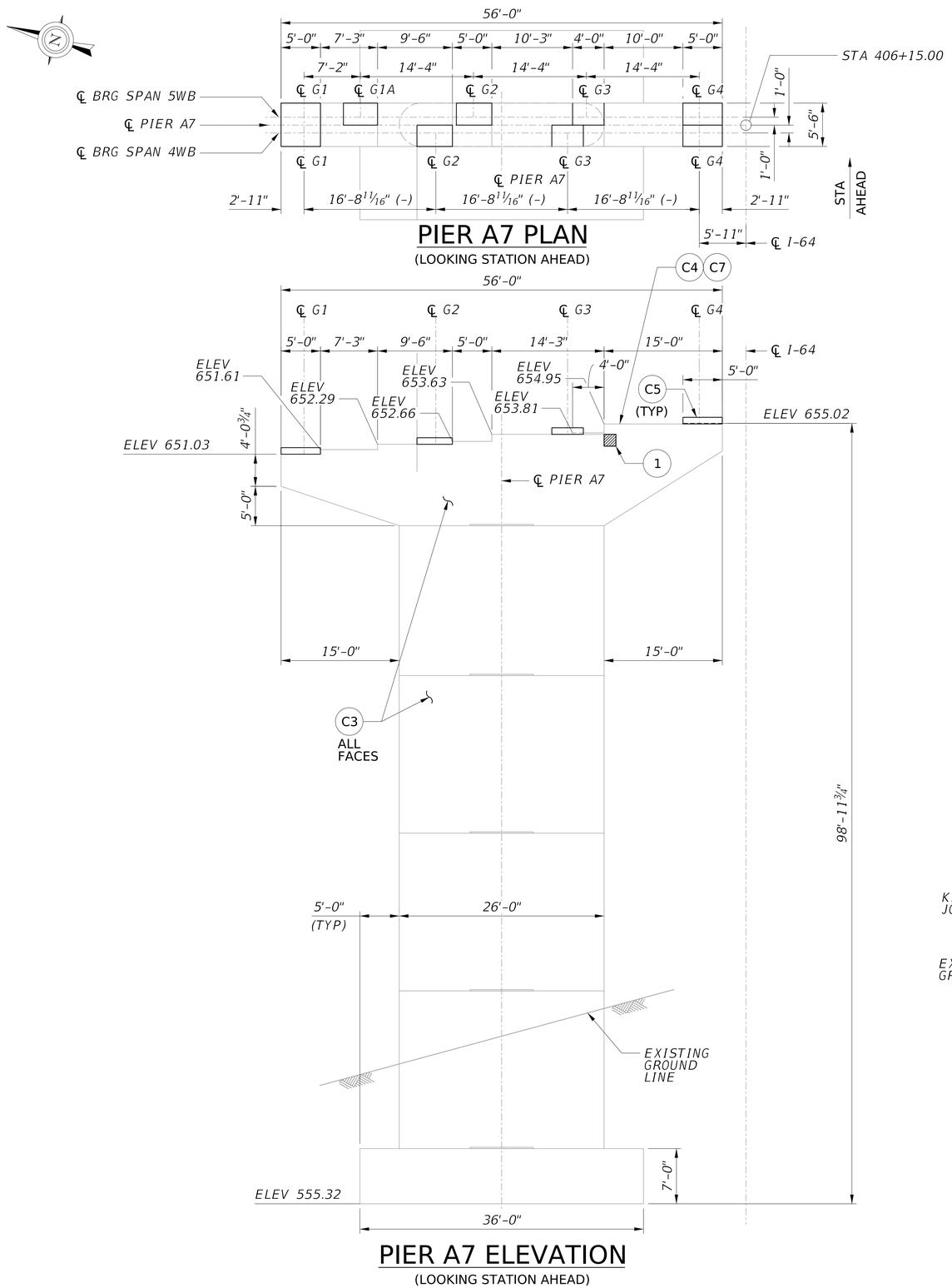

PIER A7 PLAN

(LOOKING STATION AHEAD)

PIER A7 ELEVATION

(LOOKING STATION AHEAD)

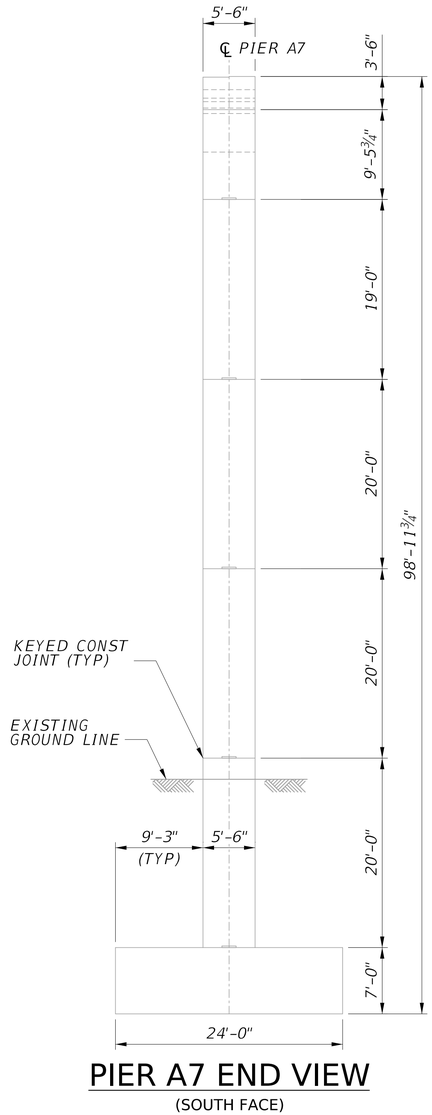

PIER A7 END VIEW

(SOUTH FACE)

SUMMARY OF CONCRETE REPAIR QUANTITIES			
ID	UNIT	ESTIMATED QUANTITY	REPAIR
1	SF	3	C1
TOTAL C1 (DOCUMENTED)		3	
TOTAL C1 (ADJUSTED)		5	
2	LF	8	C2
3	LF	6	C2
TOTAL C2 (DOCUMENTED)		14	
TOTAL C2 (ADJUSTED)		21	

C1 QUANTITY INCLUDES BOTH C1B AND C1C REPAIRS.

** DOWNSPOUTING ON THIS PIER TO BE REPLACED

LEGEND:

- CONCRETE REMOVAL
- CONCRETE REPAIR
- (#) REPAIR ID NUMBER

NOTES:

1. FOR GENERAL NOTES, SEE SHEETS XX THRU XX.
2. FOR PIER BEARING PEDESTAL DETAILS, SEE SHEETS XX THRU XX.
3. ELEVATIONS SHOWN ARE FROM ORIGINAL CONSTRUCTION PLANS STATIONS CONVERTED TO NAVD 88 DATUM, AND ARE GIVEN AT ℄ PIER.

2 0 4 8 ft.

⅛" = 1'-0"

NO.	REVISION	DATE	BY

WEST VIRGINIA DEPARTMENT OF TRANSPORTATION
DIVISION OF HIGHWAYS
ENGINEERING DIVISION

I-64 OVER KANAWHA RIVER
EUGENE A. CARTER MEMORIAL BRIDGE +3

SUBSTRUCTURE REPAIR PIER A7 (1 OF 2)

DESIGNED	LJG	DATE	08/25
DRAWN	AFMO	DATE	08/25
CHECKED			
REVIEWED			

HDR ENGINEERING INC.
CONSULTING ENGINEERS
CHARLESTON, WV
681-341-6100

SHEET OF

BRIDGE NO. 2563.6

SNOLEN $DD-MMM-YYYY HH:MM$ pw://pwhdruseas02.intranet.hdr:HDR_US_East_02/Documents/WV_DOT/WVDOT-Eugene_Carter_Bridge_3/6.0_CAD_BIM/6.2_WIP/HDR/6.2.2_Sheet_Files/23_Structure/2.111 Substructure Repair Pier A7 (1 of 2).dgn

PROJECT NUMBERS		DISTRICT	COUNTY	SHEET NO.	TOTAL
STATE	FEDERAL				
S320-64-57.44 00	NHPP-0064 (497)D	1	KANAWHA		

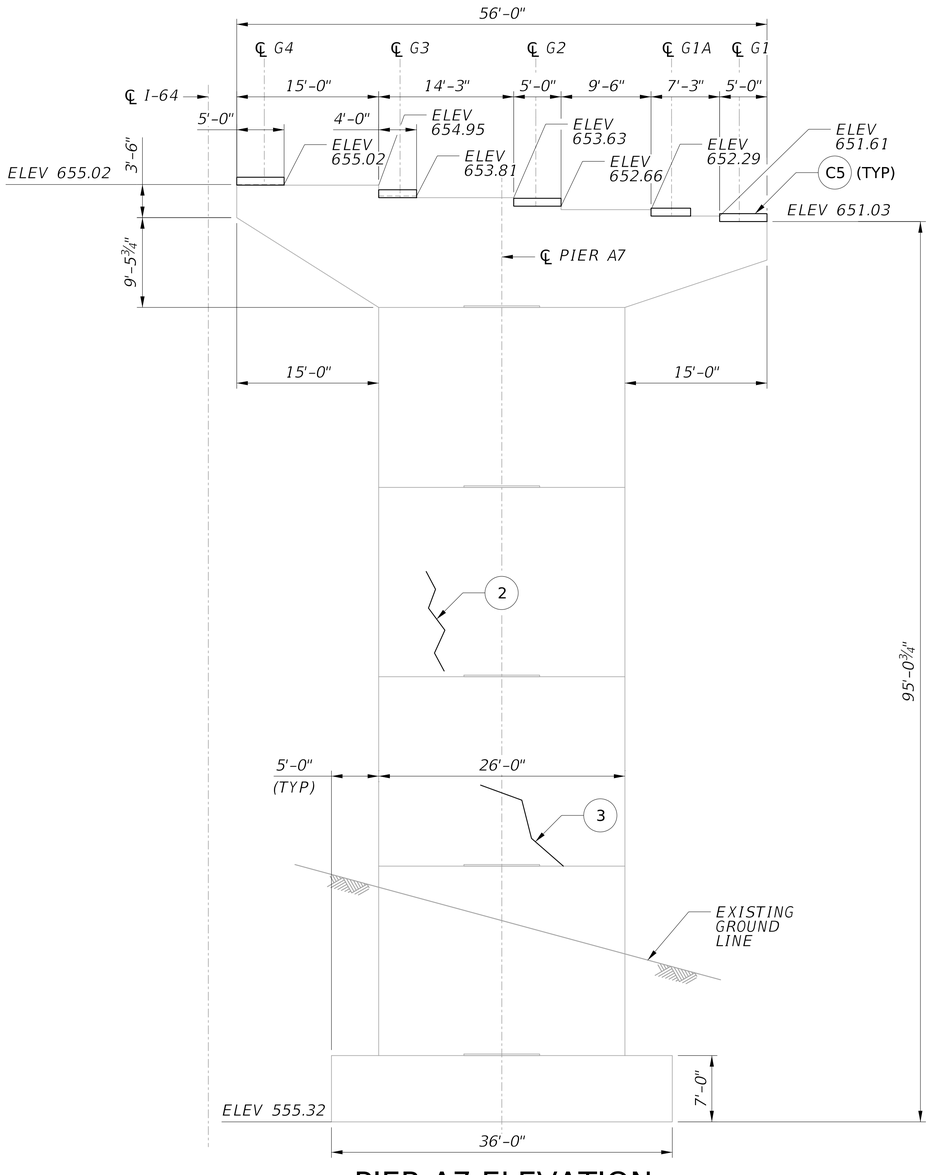

PIER A7 ELEVATION

(LOOKING STATION BACK)

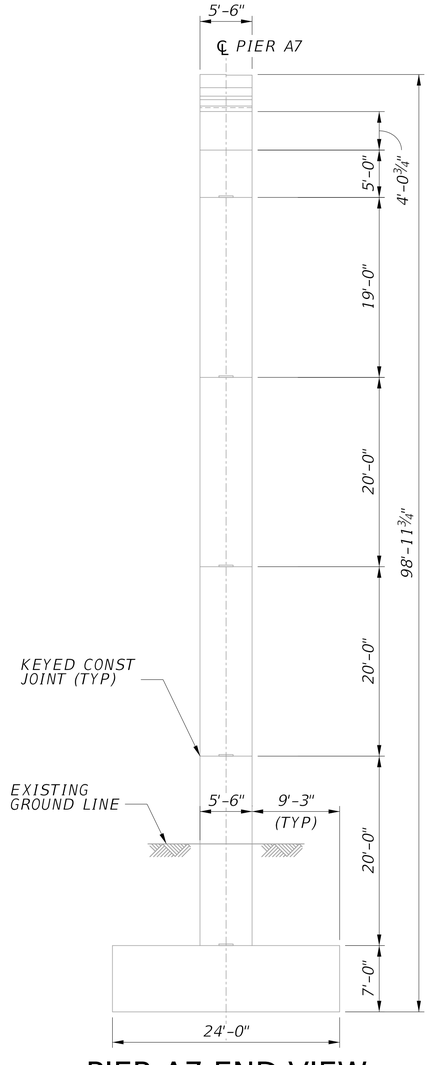

PIER A7 END VIEW

(NORTH FACE)

LEGEND:

- CONCRETE REMOVAL
- CONCRETE REPAIR
- # REPAIR ID NUMBER
- EPOXY INJECTION CRACK REPAIR

2 0 4 8 ft.

⅛" = 1'-0"

NO.	REVISION	DATE	BY

WEST VIRGINIA DEPARTMENT OF TRANSPORTATION
DIVISION OF HIGHWAYS
ENGINEERING DIVISION

I-64 OVER KANAWHA RIVER
EUGENE A. CARTER MEMORIAL BRIDGE +3

SUBSTRUCTURE REPAIR
PIER A7 (2 OF 2)

DESIGNED	LJG	DATE	08/25
DRAWN	AFMO	DATE	08/25
CHECKED			
REVIEWED			

HDR ENGINEERING INC.
CONSULTING ENGINEERS
CHARLESTON, WV
681-341-6100

SHEET OF

BRIDGE NO. 2563.6

SNOLEN $DD-MMM-YYYY HH:MM$ pw://pwhdruseas02.Intranet.hdr:HDR_US_East_02/Documents/WV_DOT/WVDOT-Eugene_Carter_Bridge_3/6.0_CAD_BIM/6.2_WIP/HDR/6.2.2_Sheet_Files/23_Structure/2.112 Substructure Repair Pier A7 (2 of 2).dgn

PROJECT NUMBERS		DISTRICT	COUNTY	SHEET NO.	TOTAL
STATE	FEDERAL				
S320-64-57.44 00	NHPP-0064 (497)D	1	KANAWHA		

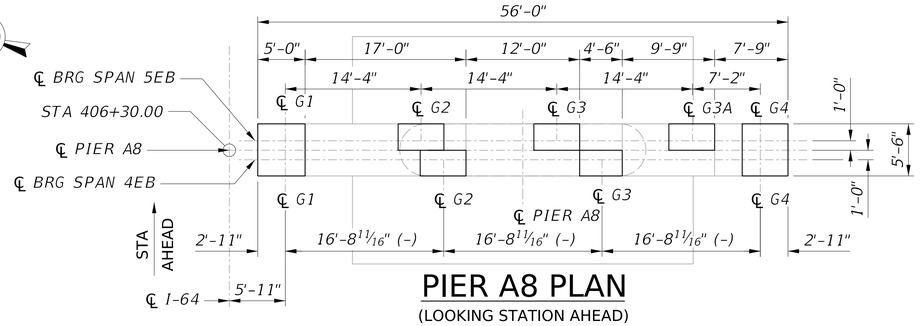

PIER A8 PLAN

(LOOKING STATION AHEAD)

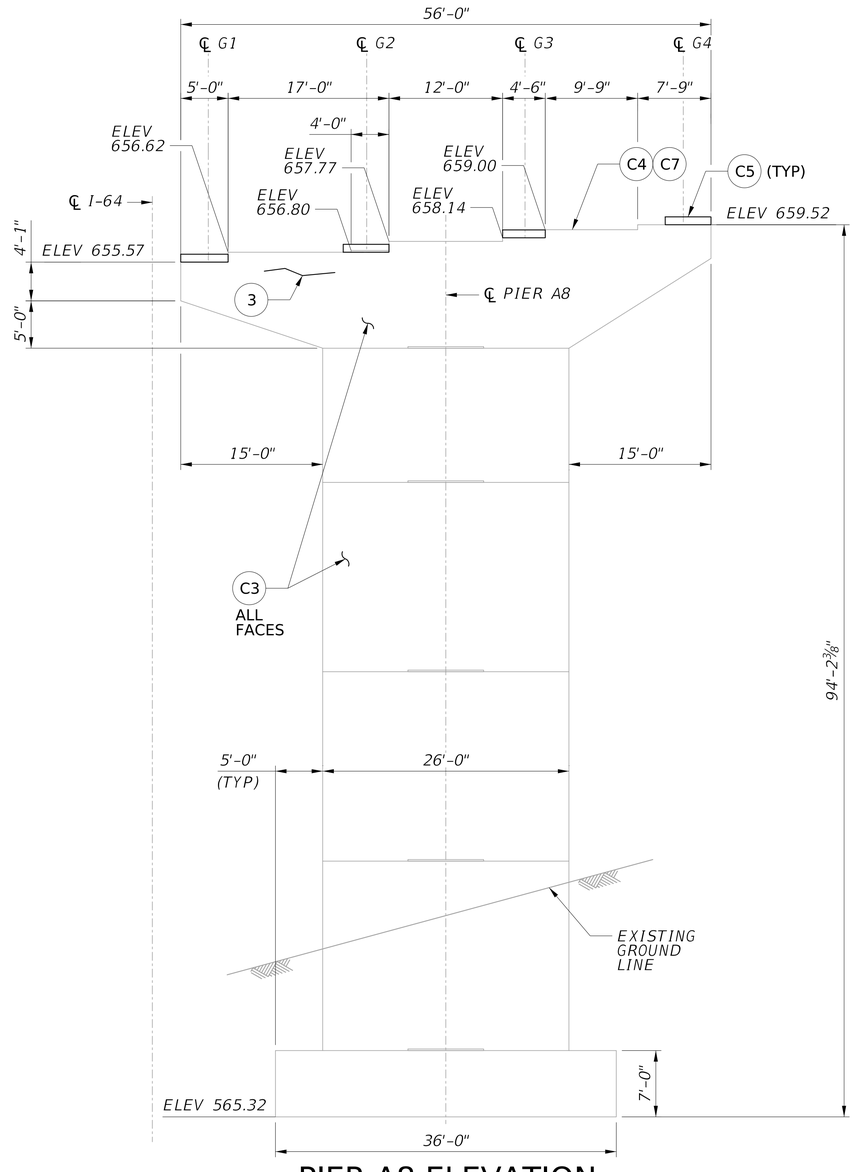

PIER A8 ELEVATION

(LOOKING STATION AHEAD)

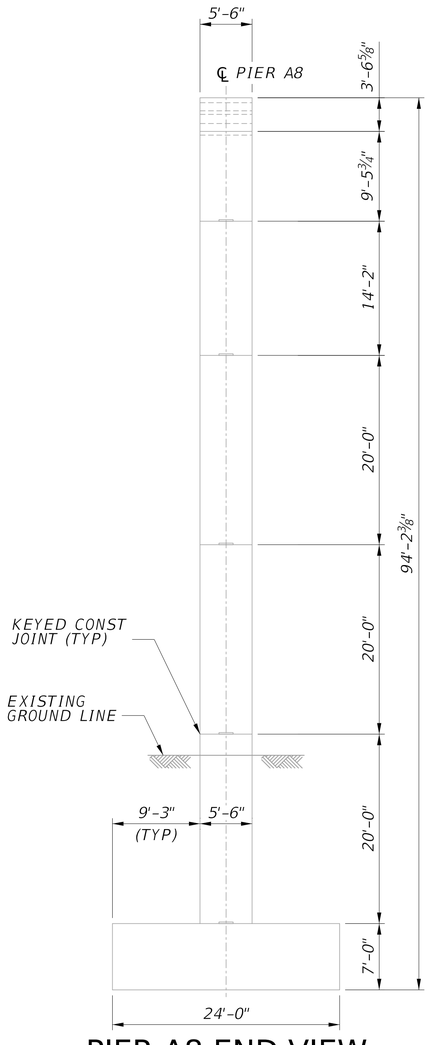

PIER A8 END VIEW

(SOUTH FACE)

SUMMARY OF CONCRETE REPAIR QUANTITIES

ID	UNIT	ESTIMATED QUANTITY	REPAIR
1	SF	20	C1
2	SF	1	C1
TOTAL C1 (DOCUMENTED)		21	
TOTAL C1 (ADJUSTED)		32	
3	LF	1	C2
TOTAL C2 (DOCUMENTED)		1	
TOTAL C2 (ADJUSTED)		2	

C1 QUANTITY INCLUDES BOTH C1B AND C1C REPAIRS.

** DOWNSPOUTING ON THIS PIER TO BE REPLACED

LEGEND:

- CONCRETE REMOVAL
- CONCRETE REPAIR
- # REPAIR ID NUMBER
- EPOXY INJECTION CRACK REPAIR

NOTES:

1. FOR GENERAL NOTES, SEE SHEETS XX THRU XX.
2. FOR PIER BEARING PEDESTAL DETAILS, SEE SHEETS XX THRU XX.
3. ELEVATIONS SHOWN ARE FROM ORIGINAL CONSTRUCTION PLANS STATIONS CONVERTED TO NAVD 88 DATUM, AND ARE GIVEN AT ℄ PIER.

2 0 4 8 ft.

⅛" = 1'-0"

NO.	REVISION	DATE	BY

WEST VIRGINIA DEPARTMENT OF TRANSPORTATION
DIVISION OF HIGHWAYS
ENGINEERING DIVISION

I-64 OVER KANAWHA RIVER
EUGENE A. CARTER MEMORIAL BRIDGE +3

SUBSTRUCTURE REPAIR PIER A8 (1 OF 2)

DESIGNED	LJG
DATE	08/25
DRAWN	AFMO
DATE	08/25
CHECKED	
REVIEWED	

HDR ENGINEERING INC.
CONSULTING ENGINEERS
CHARLESTON, WV
681-341-6100

SHEET
OF
BRIDGE NO.
2563.6

SNOLEN $DD-MMM-YYYY HH:MM$ pw://pwhdruseas02.intranet.hdr:HDR_US_East_02/Documents/WV_DOT/WVDOT-Eugene_Carter_Bridge_3/6.0_CAD_BIM/6.2_WIP/HDR/6.2.2_Sheet_Files/23_Structure/2.113 Substructure Repair Pier A8 (1 of 2).dgn

PROJECT NUMBERS		DISTRICT	COUNTY	SHEET NO.	TOTAL
STATE	FEDERAL				
S320-64-57.44 00	NHPP-0064 (497)D	1	KANAWHA		

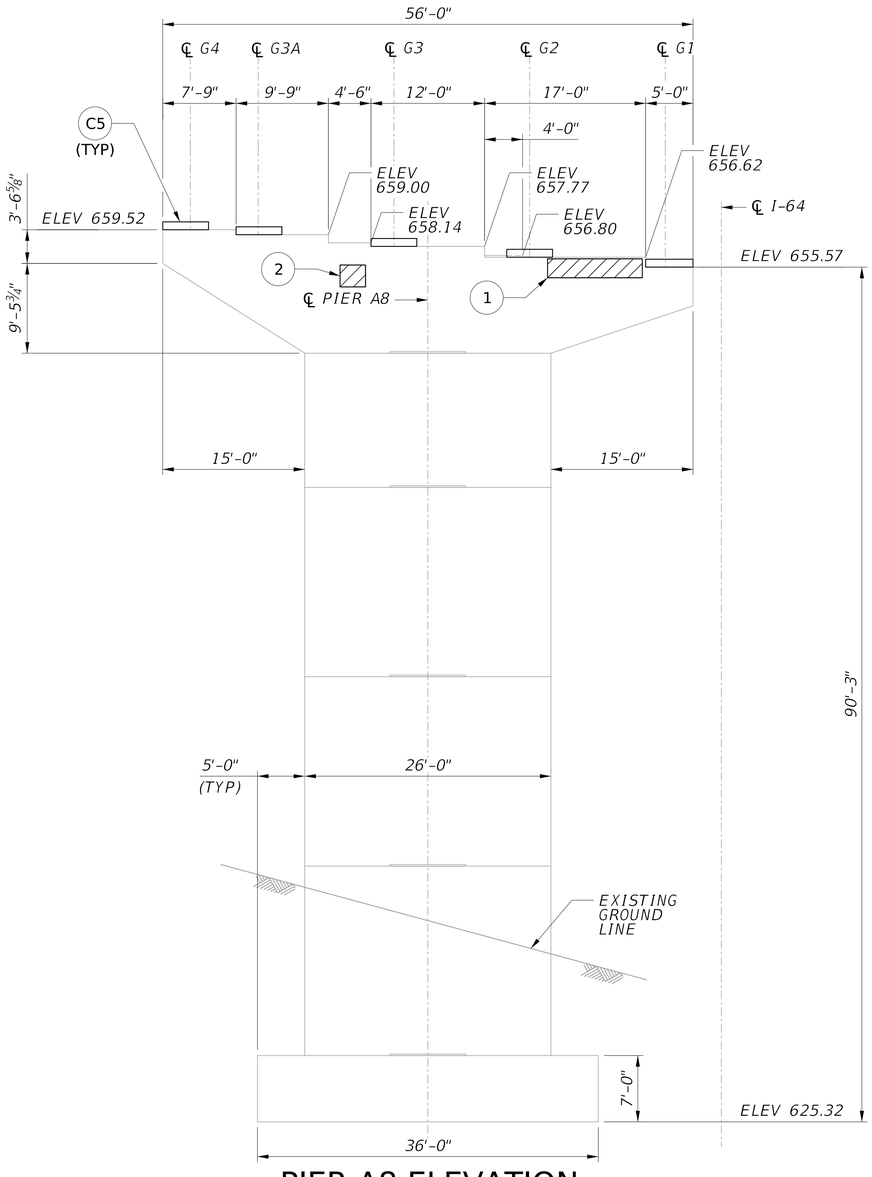

PIER A8 ELEVATION

(LOOKING STATION BACK)

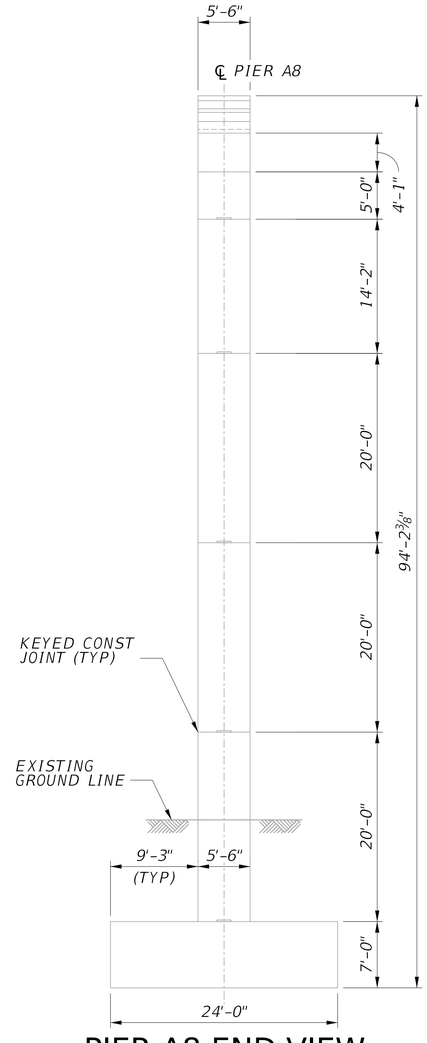

PIER A8 END VIEW

(NORTH FACE)

LEGEND:

- CONCRETE REMOVAL
- CONCRETE REPAIR
- (#) REPAIR ID NUMBER

2 0 4 8 ft.

1/8" = 1'-0"

NO.	REVISION	DATE	BY

WEST VIRGINIA DEPARTMENT OF TRANSPORTATION
DIVISION OF HIGHWAYS
ENGINEERING DIVISION

I-64 OVER KANAWHA RIVER
EUGENE A. CARTER MEMORIAL BRIDGE +3

SUBSTRUCTURE REPAIR PIER A8 (2 OF 2)

DESIGNED	LJG	DATE	08/25
DRAWN	AFMO		08/25
CHECKED			
REVIEWED			

HDR ENGINEERING INC.
CONSULTING ENGINEERS
CHARLESTON, WV
681-341-6100

SHEET OF

BRIDGE NO. 2563.6

SNOLEN $DD-MMM-YYYY HH:MM$ pw://pwhdruseas02.intranet.hdr:HDR_US_East_02/Documents/WV_DOT/WVDOT-Eugene_Carter_Bridge_3/6.0_CAD_BIM/6.2_WIP/HDR/6.2.2_Sheet_Files/23_Structure/2.114 Substructure Repair Pier A8 (2 of 2).dgn

PROJECT NUMBERS		DISTRICT	COUNTY	SHEET NO.	TOTAL
STATE	FEDERAL				
S320-64-57.44 00	NHPP-0064 (497)D	1	KANAWHA		

SUMMARY OF CONCRETE REPAIR QUANTITIES			
ID	UNIT	ESTIMATED QUANTITY	REPAIR
TOTAL C1 (DOCUMENTED)		0	
TOTAL C1 (ADJUSTED)		0	
1	LF	3	C2
2	LF	24	C2
TOTAL C2 (DOCUMENTED)		27	
TOTAL C2 (ADJUSTED)		41	

C1 QUANTITY INCLUDES BOTH C1B AND C1C REPAIRS.

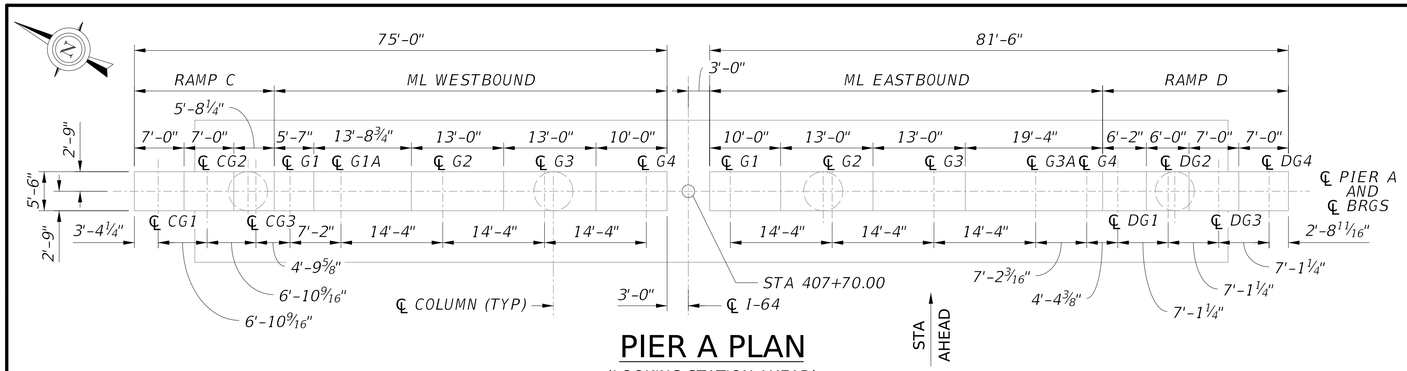

PIER A PLAN

(LOOKING STATION AHEAD)

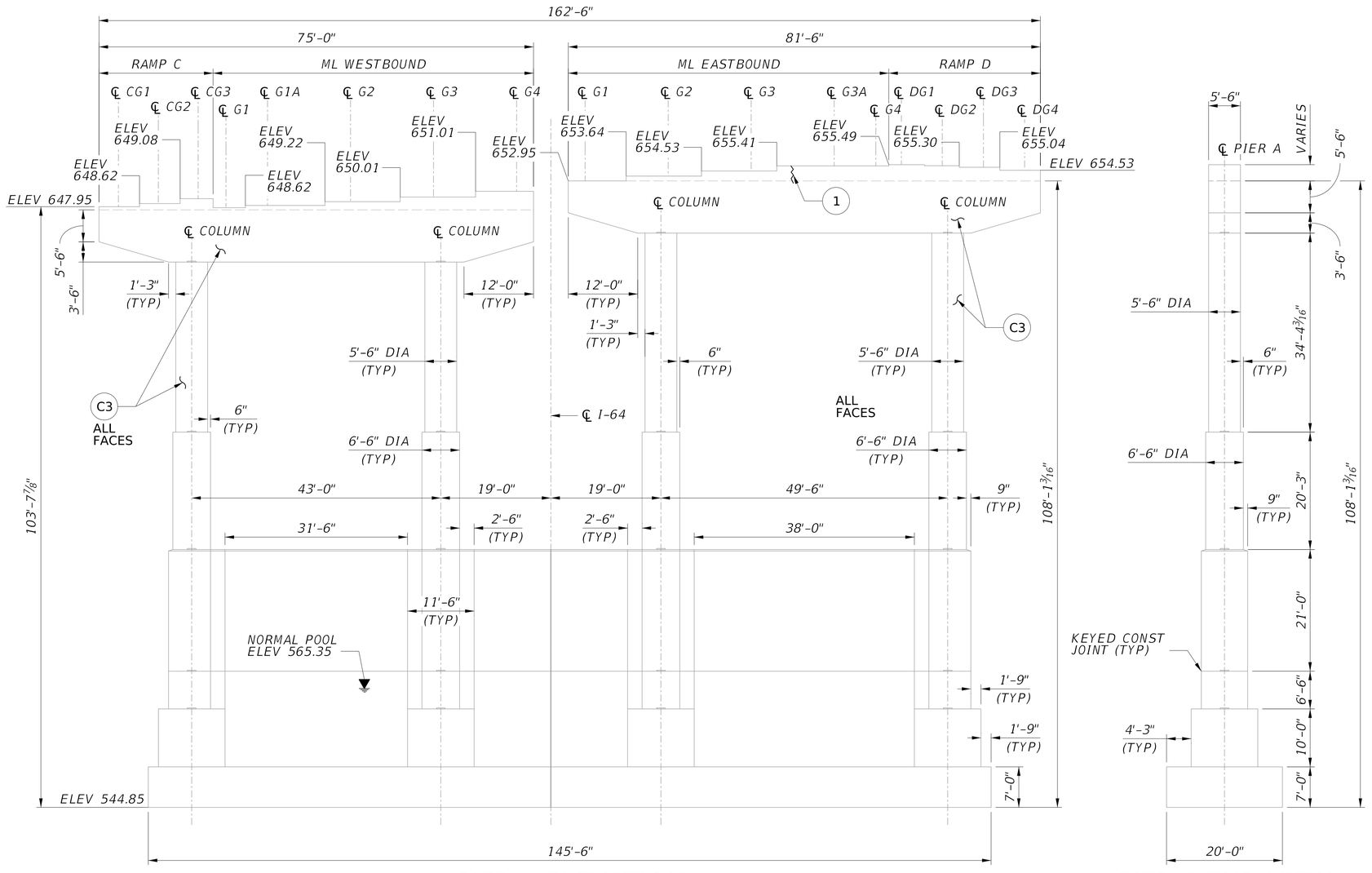

PIER A ELEVATION

(LOOKING STATION AHEAD)

PIER A END VIEW

(SOUTH FACE)

LEGEND:

- CONCRETE REMOVAL
- CONCRETE REPAIR
- (#) REPAIR ID NUMBER
- EPOXY INJECTION CRACK REPAIR

NOTES:

1. FOR GENERAL NOTES, SEE SHEETS XX THRU XX.
2. ELEVATIONS SHOWN ARE FROM ORIGINAL CONSTRUCTION PLANS STATIONS CONVERTED TO NAVD 88 DATUM, AND ARE GIVEN AT ℄ PIER.

2 0 4 8 12 ft.

3⁄32" = 1'-0"

NO.	REVISION	DATE	BY

WEST VIRGINIA DEPARTMENT OF TRANSPORTATION
DIVISION OF HIGHWAYS
ENGINEERING DIVISION

I-64 OVER KANAWHA RIVER
EUGENE A. CARTER MEMORIAL BRIDGE +3

SUBSTRUCTURE REPAIR PIER A (1 OF 2)

DESIGNED	LJG	DATE	08/25
DRAWN	AFMO		08/25
CHECKED			
REVIEWED			

HDR ENGINEERING INC.
CONSULTING ENGINEERS
CHARLESTON, WV
681-341-6100

SHEET OF

BRIDGE NO. 2563.6

SNOLEN $DD-MMM-YYYY HH:MM$ pw://pwhdruseas02.intranet.hdr:HDR_US_East_02/Documents/WV_DOT/WVDOT-Eugene_Carter_Bridge_3/6.0_CAD_BIM/6.2_WIP/HDR/6.2.2_Sheet_Files/23_Structure/2.121 Substructure Repair Pier A (1 of 2).dgn

PROJECT NUMBERS		DISTRICT	COUNTY	SHEET NO.	TOTAL
STATE	FEDERAL				
S320-64-57.44 00	NHPP-0064 (497)D	1	KANAWHA		

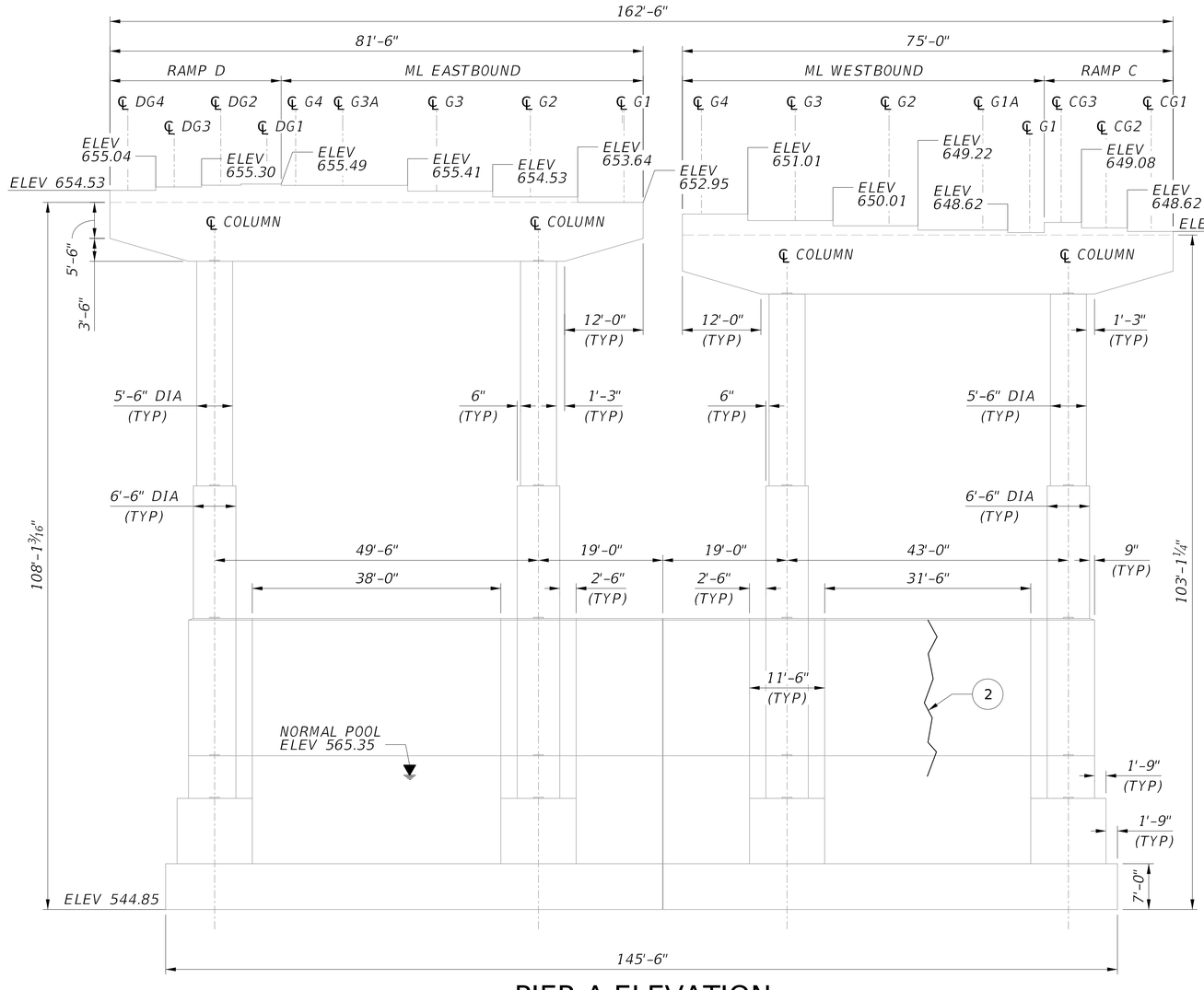

PIER A ELEVATION

(LOOKING STATION BACK)

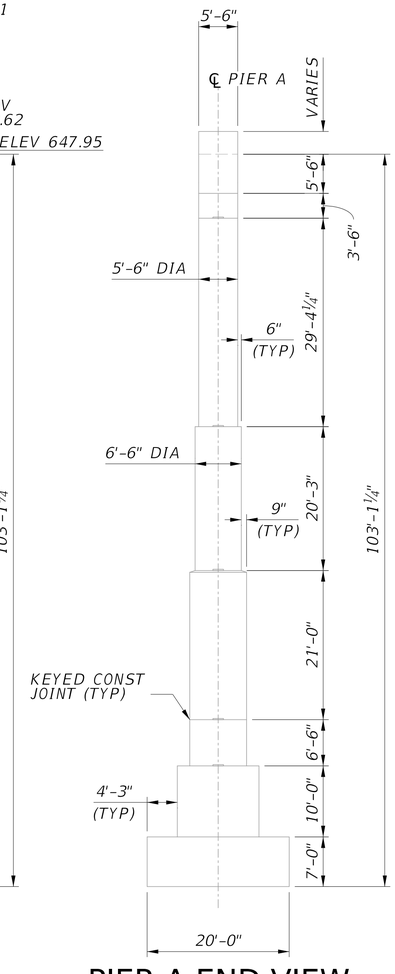

PIER A END VIEW

(NORTH FACE)

LEGEND:

- CONCRETE REMOVAL
- CONCRETE REPAIR
- (#) REPAIR ID NUMBER
- EPOXY INJECTION CRACK REPAIR

2 0 4 8 12 ft.

3/32" = 1'-0"

NO.	REVISION	DATE	BY

WEST VIRGINIA DEPARTMENT OF TRANSPORTATION
DIVISION OF HIGHWAYS
ENGINEERING DIVISION

I-64 OVER KANAWHA RIVER
EUGENE A. CARTER MEMORIAL BRIDGE +3

SUBSTRUCTURE REPAIR
PIER A (2 OF 2)

DESIGNED	DATE
LJG	08/25
DRAWN	
AFMO	08/25
CHECKED	
REVIEWED	

HDR ENGINEERING INC.
CONSULTING ENGINEERS
CHARLESTON, WV
681-341-6100

SHEET OF

BRIDGE NO. 2563.6

SNOLEN $DD-MMM-YYYY HH:MM$ pw://pwhdruseas02.intranet.hdr:HDR_US_East_02/Documents/WV_DOT/WVDOT-Eugene_Carter_Bridge_3/6.0_CAD_BIM/6.2_WIP/HDR/6.2.2_Sheet_Files/23_Structure/2.122 Substructure Repair Pier A (2 of 2).dgn

PROJECT NUMBERS		DISTRICT	COUNTY	SHEET NO.	TOTAL
STATE	FEDERAL				
S320-64-57.44 00	NHPP-0064 (497)D	1	KANAWHA		

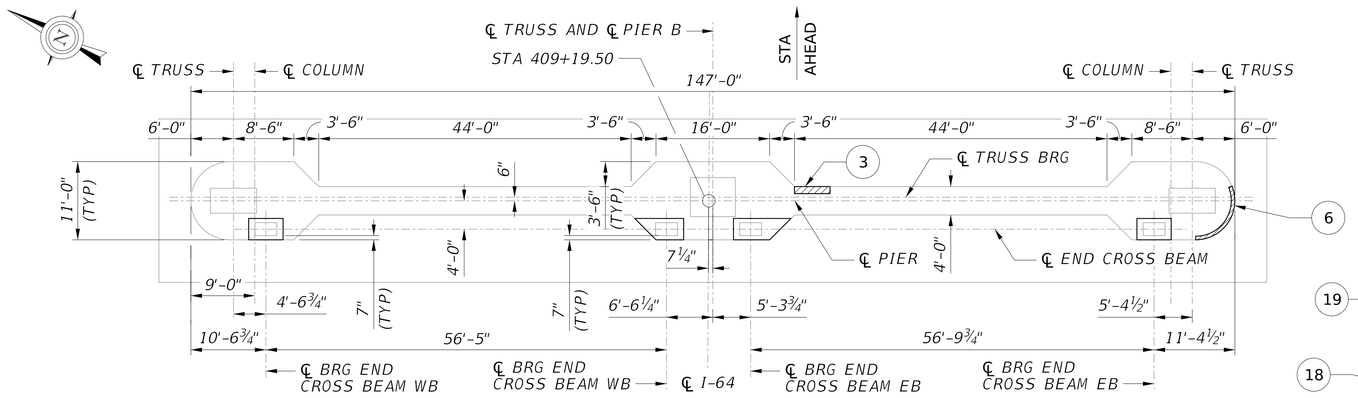

PIER B PLAN

(LOOKING STATION AHEAD)

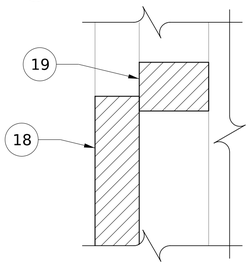

SECTION A-A

NOT TO SCALE

LEGEND:

- CONCRETE REMOVAL
- CONCRETE REPAIR
- (#) REPAIR ID NUMBER
- EPOXY INJECTION CRACK REPAIR

NOTES:

1. FOR GENERAL NOTES, SEE SHEETS XX THRU XX.
2. FOR PIER BEARING PEDESTAL DETAILS, SEE SHEETS XX THRU XX.
3. ELEVATIONS SHOWN ARE FROM ORIGINAL CONSTRUCTION PLANS STATIONS CONVERTED TO NAVD 88 DATUM, AND ARE GIVEN AT ℄ PIER.

SUMMARY OF CONCRETE REPAIR QUANTITIES

ID	UNIT	ESTIMATED QUANTITY	REPAIR
1	SF	8	C1
2	SF	10	C1
3	SF	5	C1
4	SF	6	C1
5	SF	12	C1
6	SF	30	C1
7	SF	2	C1
8	SF	1	C1
9	SF	5	C1
10	SF	174	C1
11	SF	10	C1
12	SF	165	C1
13	SF	8	C1
14	SF	36	C1
15	SF	74	C1
16	SF	18	C1
17	SF	12	C1
18	SF	30	C1
19	SF	12	C1
20	SF	4	C1
21	SF	40	C1
22	SF	2	C1
23	SF	1	C1
24	SF	3	C1
TOTAL C1 (DOCUMENTED)		668	
TOTAL C1 (ADJUSTED)		869	
25	LF	4	C2
26	LF	3	C2
27	LF	8	C2
28	LF	6	C2
29	LF	42	C2
30	LF	21	C2
31	LF	5	C2
32	LF	10	C2
33	LF	30	C2
34	LF	60	C2
35	LF	60	C2
36	LF	60	C2
37	LF	20	C2
38	LF	16	C2
39	LF	20	C2
40	LF	15	C2
41	LF	21	C2
TOTAL C2 (DOCUMENTED)		401	
TOTAL C2 (ADJUSTED)		522	

C1 QUANTITY INCLUDES BOTH C1B AND C1C REPAIRS.

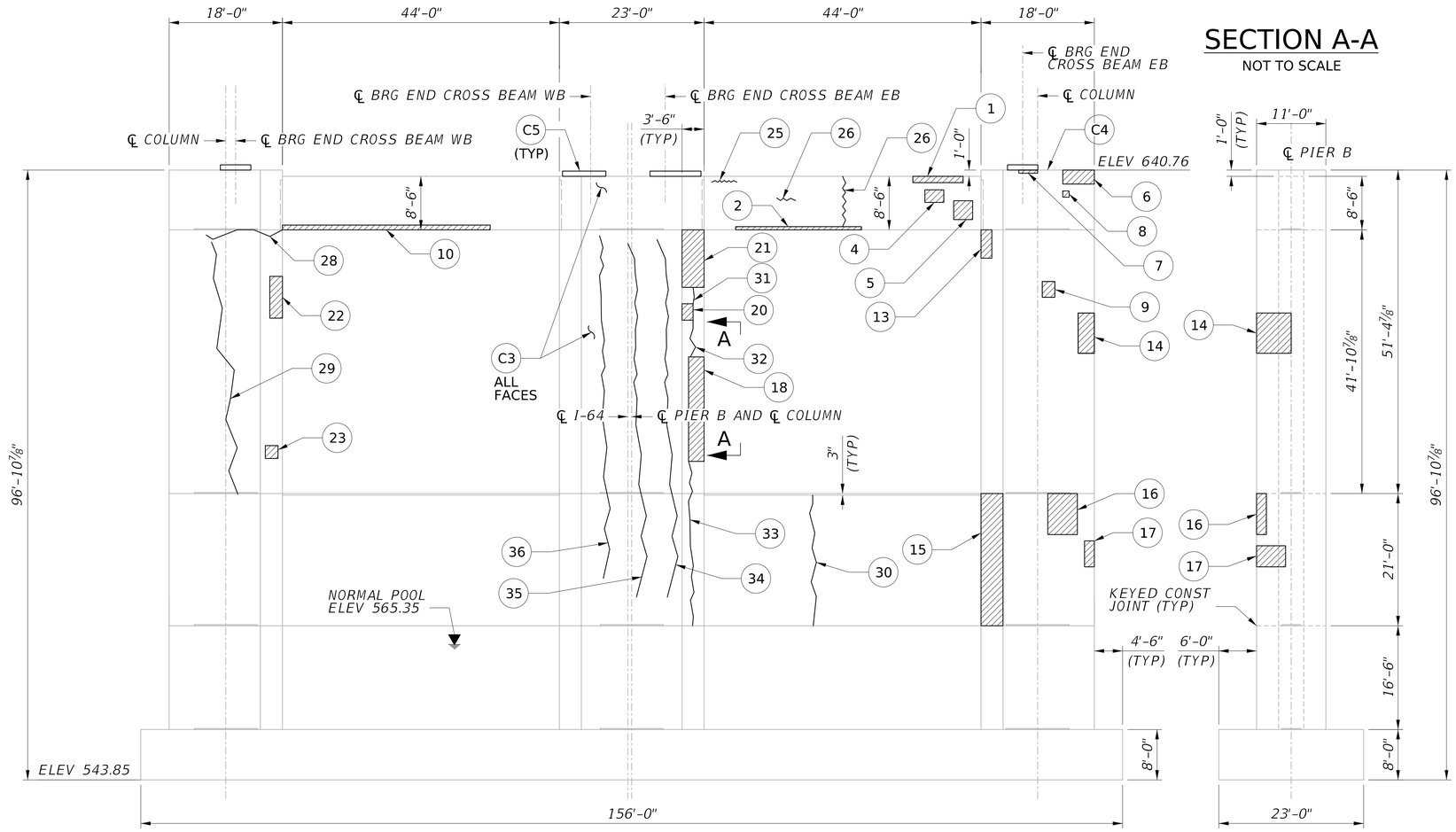

PIER B ELEVATION

(LOOKING STATION AHEAD)

PIER B END VIEW

(SOUTH FACE)

2 0 4 8 12 ft.

3/32" = 1'-0"

NO.	REVISION	DATE	BY

WEST VIRGINIA DEPARTMENT OF TRANSPORTATION
DIVISION OF HIGHWAYS
ENGINEERING DIVISION

I-64 OVER KANAWHA RIVER
EUGENE A. CARTER MEMORIAL BRIDGE +3

SUBSTRUCTURE REPAIR
PIER B (1 OF 2)

DESIGNED	LJG	DATE	08/25
DRAWN	AFMO	DATE	08/25
CHECKED			
REVIEWED			

HDR ENGINEERING INC.
CONSULTING ENGINEERS
CHARLESTON, WV
681-341-6100

SHEET OF

BRIDGE NO. 2563.6

pw://pwhdruseas02.intranet.hdr:HDR_US_East_02/Documents/WV_DOT/WVDOT-Eugene_Carter_Bridge_3/6.0_CAD_BIM/6.2_WIP/HDR/6.2.2_Sheet_Files/23_Structure/2.123 Substructure Repair Pier B (1 of 2).dgn
$DD-MMM-YYYY HH:MM$
SNOLEN

PROJECT NUMBERS		DISTRICT	COUNTY	SHEET NO.	TOTAL
STATE	FEDERAL				
S320-64-57.44 00	NHPP-0064 (497)D	1	KANAWHA		

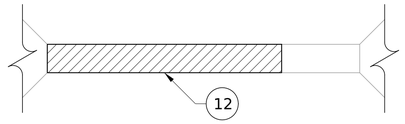

SECTION A-A

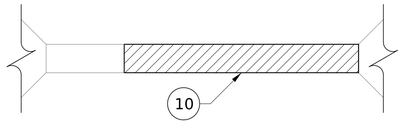

SECTION B-B

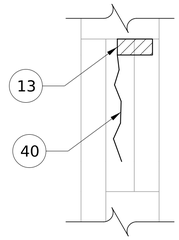

SECTION C-C

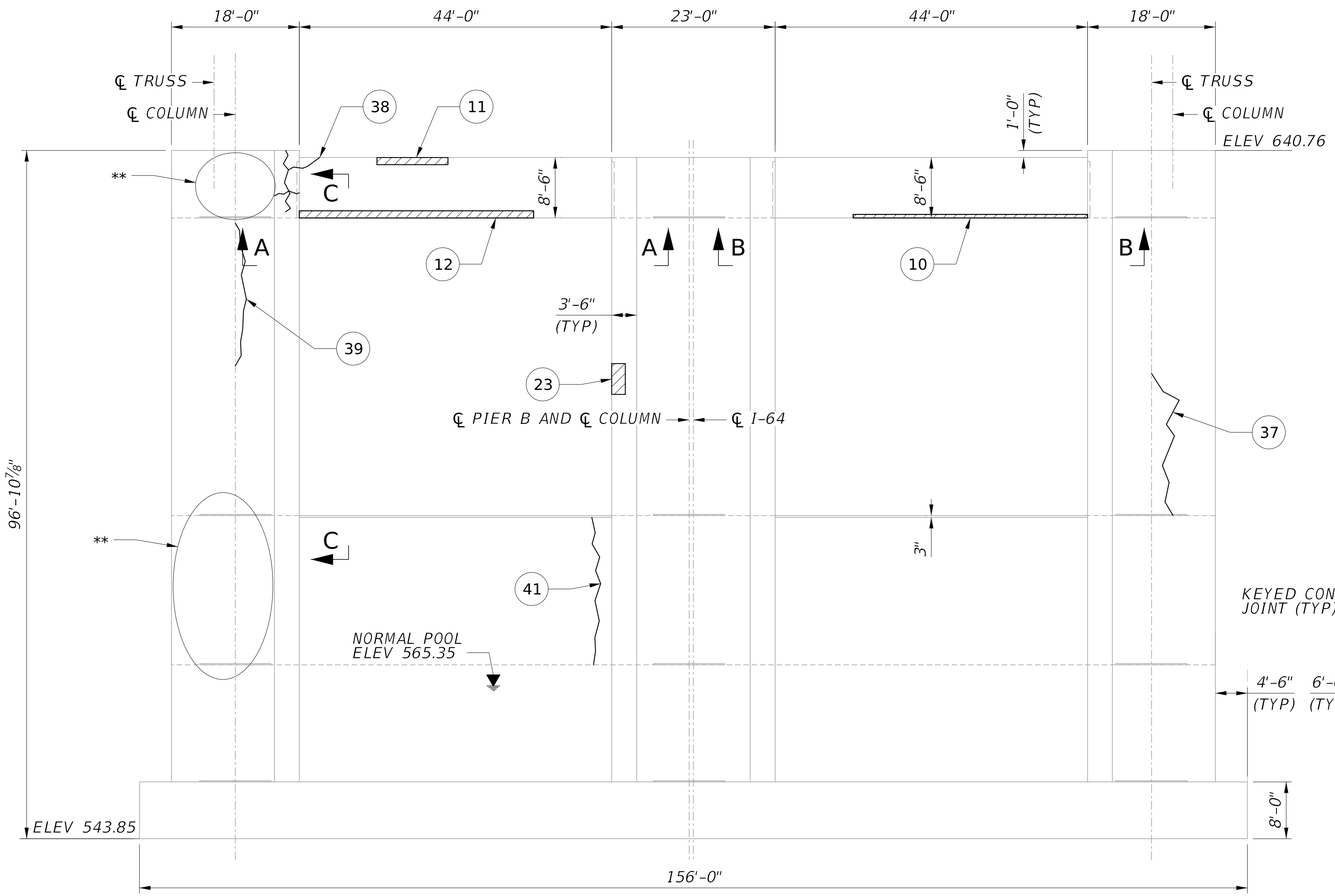

PIER B ELEVATION

(LOOKING STATION BACK)

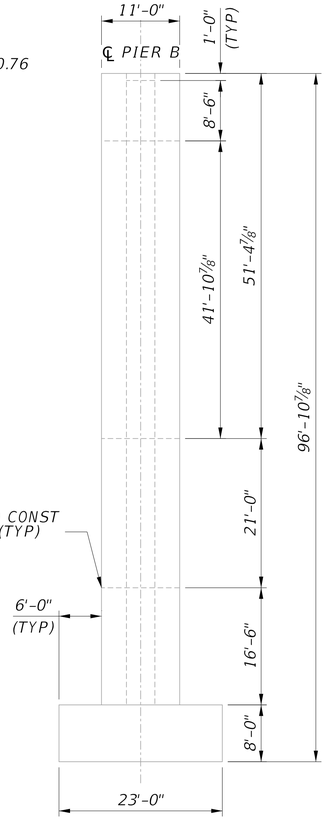

PIER B END VIEW

(NORTH FACE)

** MAP CRACKING NOTED, EPOXY INJECT CRACKS AT THE DIRECTION OF THE DOH. IF EPOXY INJECTION IS NOT REQUIRED, ENSURE PENETRATION OF WATERPROOFING INTO THE CRACKS.

LEGEND:

- CONCRETE REMOVAL
- CONCRETE REPAIR
- (#) REPAIR ID NUMBER
- EPOXY INJECTION CRACK REPAIR

2 0 4 8 12 ft.

3/32" = 1'-0"

NO.	REVISION	DATE	BY

WEST VIRGINIA DEPARTMENT OF TRANSPORTATION
DIVISION OF HIGHWAYS
ENGINEERING DIVISION

I-64 OVER KANAWHA RIVER
EUGENE A. CARTER MEMORIAL BRIDGE +3

SUBSTRUCTURE REPAIR
PIER B (2 OF 2)

DESIGNED	DATE
LJG	08/25
DRAWN	
AFMO	08/25
CHECKED	
REVIEWED	

HDR ENGINEERING INC.
CONSULTING ENGINEERS
CHARLESTON, WV
681-341-6100

SHEET OF

BRIDGE NO. 2563.6

SNOLEN $DD-MMM-YYYY HH:MM$ pw://pwhdruseas02.intranet.hdr:HDR_US_East_02/Documents/WV_DOT/WVDOT-Eugene_Carter_Bridge_3/6.0_CAD_BIM/6.2_WIP/HDR/6.2.2_Sheet_Files/23_Structure/2.124 Substructure Repair Pier B (2 of 2).dgn

PROJECT NUMBERS		DISTRICT	COUNTY	SHEET NO.	TOTAL
STATE	FEDERAL				
S320-64-57.44 00	NHPP-0064 (497)D	1	KANAWHA		

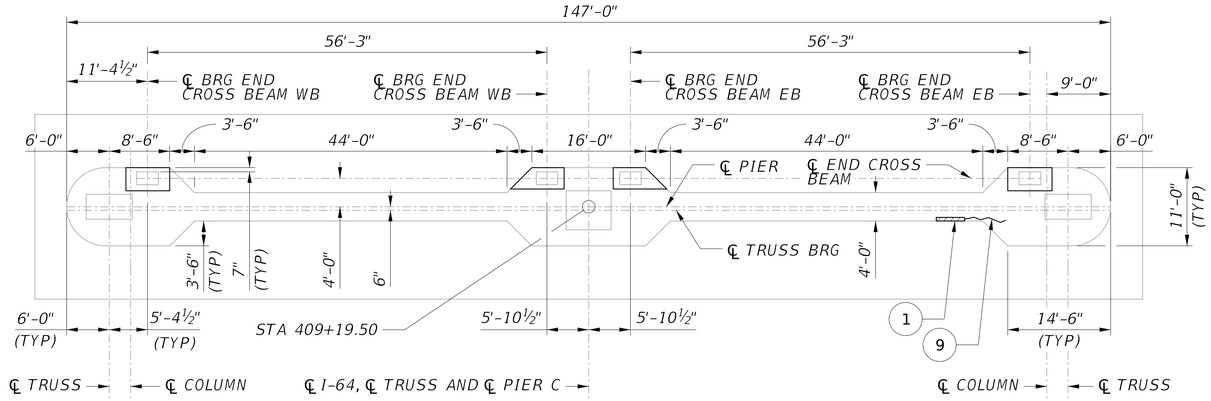

PIER C PLAN

(LOOKING STATION AHEAD)

SUMMARY OF CONCRETE REPAIR QUANTITIES			
ID	UNIT	ESTIMATED QUANTITY	REPAIR
1	SF	4	C1
2	SF	4	C1
3	SF	1	C1
4	SF	16	C1
5	SF	1	C1
6	SF	24	C1
7	SF	60	C1
TOTAL C1 (DOCUMENTED)		110	
TOTAL C1 (ADJUSTED)		143	
8	LF	8	C2
9	LF	2	C2
10	LF	25	C2
11	LF	2	C2
TOTAL C2 (DOCUMENTED)		37	
TOTAL C2 (ADJUSTED)		49	

C1 QUANTITY INCLUDES BOTH C1B AND C1C REPAIRS.

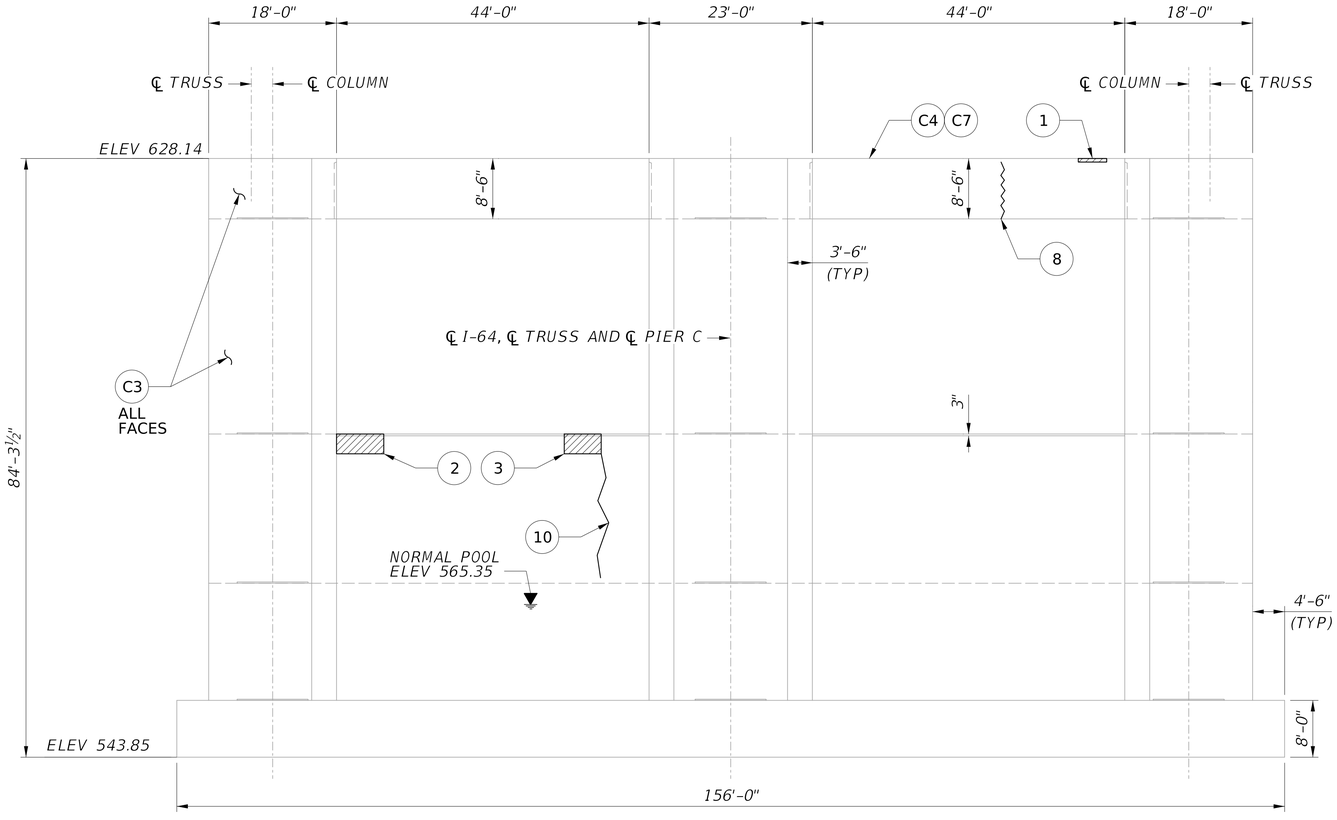

PIER C ELEVATION

(LOOKING STATION AHEAD)

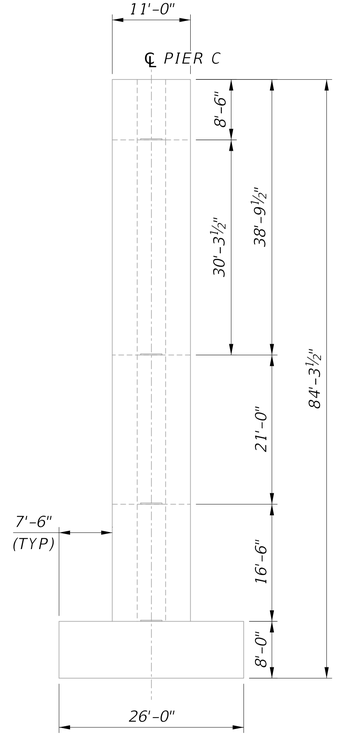

PIER C END VIEW

(SOUTH FACE)

LEGEND:

- CONCRETE REMOVAL
- CONCRETE REPAIR
- (#) REPAIR ID NUMBER
- EPOXY INJECTION CRACK REPAIR

NOTES:

1. FOR GENERAL NOTES, SEE SHEETS XX THRU XX.
2. FOR PIER BEARING PEDESTAL DETAILS, SEE SHEETS XX THRU XX.
3. ELEVATIONS SHOWN ARE FROM ORIGINAL CONSTRUCTION PLANS STATIONS CONVERTED TO NAVD 88 DATUM, AND ARE GIVEN AT ℄ PIER.

2 0 4 8 12 ft.

3/32" = 1'-0"

NO.	REVISION	DATE	BY

WEST VIRGINIA DEPARTMENT OF TRANSPORTATION
DIVISION OF HIGHWAYS
ENGINEERING DIVISION

I-64 OVER KANAWHA RIVER
EUGENE A. CARTER MEMORIAL BRIDGE +3

SUBSTRUCTURE REPAIR PIER C (1 OF 2)

DESIGNED LJG	DATE 08/25
DRAWN AFMO	DATE 08/25
CHECKED	
REVIEWED	

HDR ENGINEERING INC.
CONSULTING ENGINEERS
CHARLESTON, WV
681-341-6100

SHEET OF

BRIDGE NO. 2563.6

SNOLEN $DD-MMM-YYYY HH:MM$ pw://pwhdruseas02.intranet.hdr:HDR_US_East_02/Documents/WV_DOT/WVDOT-Eugene_Carter_Bridge_3/6.0_CAD_BIM/6.2_WIP/HDR/6.2.2_Sheet_Files/23_Structure/2.125 Substructure Repair Pier C (1 of 2).dgn

PROJECT NUMBERS		DISTRICT	COUNTY	SHEET NO.	TOTAL
STATE	FEDERAL				
S320-64-57.44 00	NHPP-0064 (497)D	1	KANAWHA		

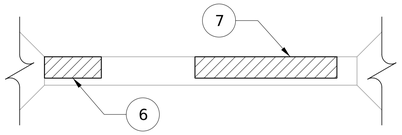

SECTION A-A

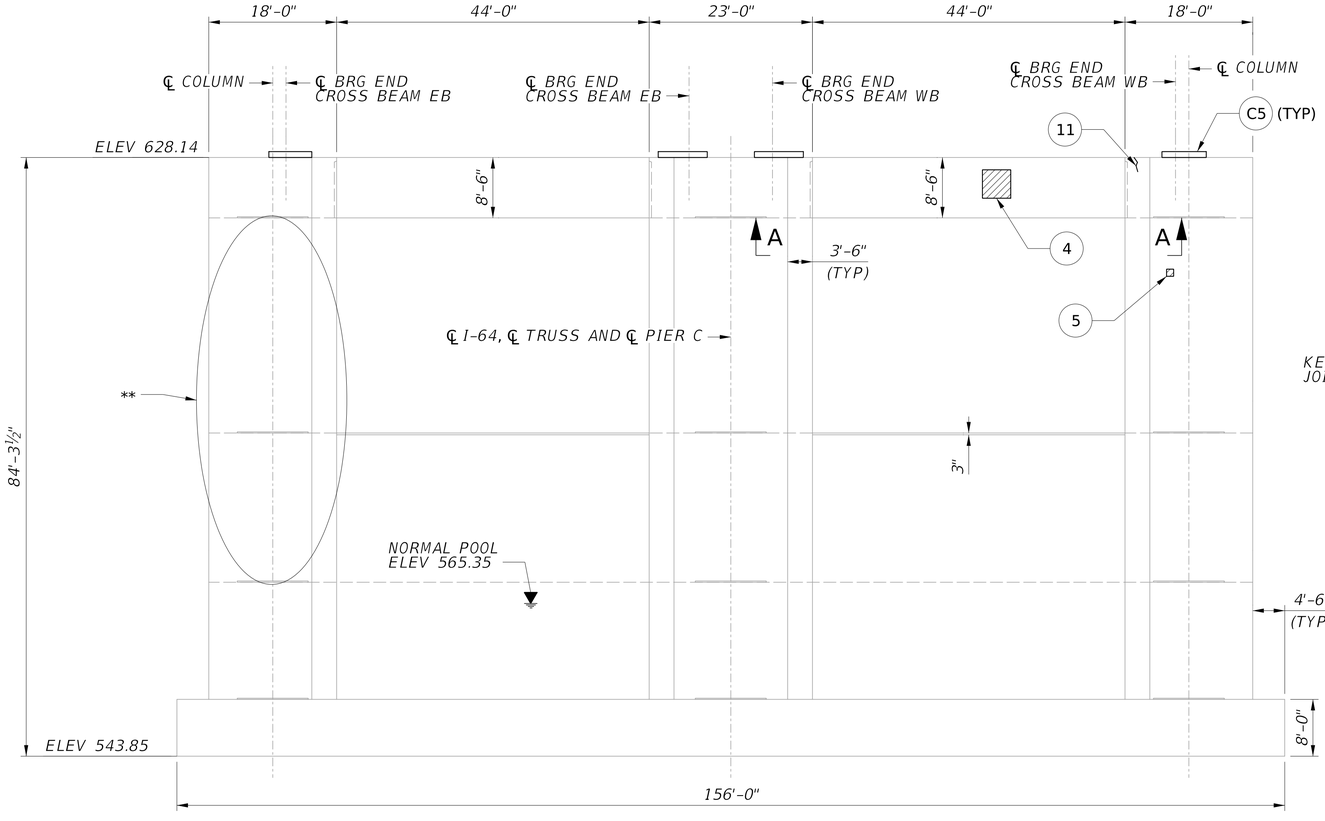

PIER C ELEVATION

(LOOKING STATION BACK)

** MAP CRACKING NOTED, EPOXY INJECT CRACKS AT THE DIRECTION OF THE DOH. IF EPOXY INJECTION IS NOT REQUIRED, ENSURE PENETRATION OF WATERPROOFING INTO THE CRACKS.

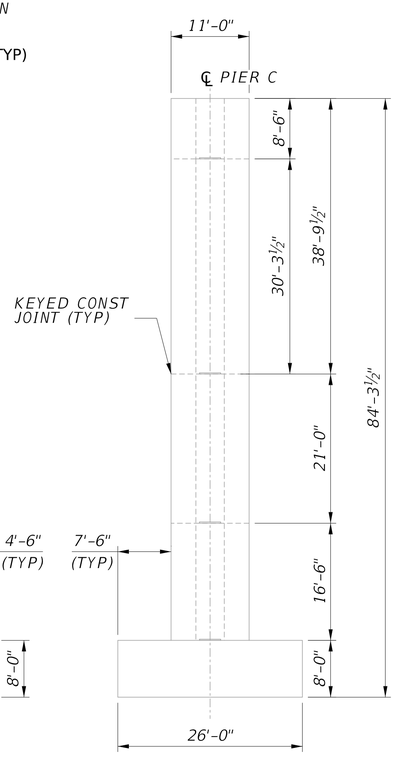

PIER C END VIEW

(NORTH FACE)

LEGEND:

- CONCRETE REMOVAL
- CONCRETE REPAIR
- (#) REPAIR ID NUMBER
- EPOXY INJECTION CRACK REPAIR

2 0 4 8 12 ft.

3/32" = 1'-0"

NO.	REVISION	DATE	BY

WEST VIRGINIA DEPARTMENT OF TRANSPORTATION
DIVISION OF HIGHWAYS
ENGINEERING DIVISION

I-64 OVER KANAWHA RIVER
EUGENE A. CARTER MEMORIAL BRIDGE +3

SUBSTRUCTURE REPAIR
PIER C (2 OF 2)

DESIGNED	DATE
LJG	08/25
DRAWN	
AFMO	08/25
CHECKED	
REVIEWED	

HDR ENGINEERING INC.
CONSULTING ENGINEERS
CHARLESTON, WV
681-341-6100

SHEET OF

BRIDGE NO. 2563.6

$DD-MMM-YYYY HH:MM$ pw://pwhdruseas02.intranet.hdr:HDR_US_East_02/Documents/WV_DOT/WVDOT-Eugene_Carter_Bridge_3/6.0_CAD_BIM/6.2_WIP/HDR/6.2.2_Sheet_Files/23_Structure/2.126 Substructure Repair Pier C (2 of 2).dgn SNOLEN

PROJECT NUMBERS		DISTRICT	COUNTY	SHEET NO.	TOTAL
STATE	FEDERAL				
S320-64-57.44 00	NHPP-0064 (497)D	1	KANAWHA		

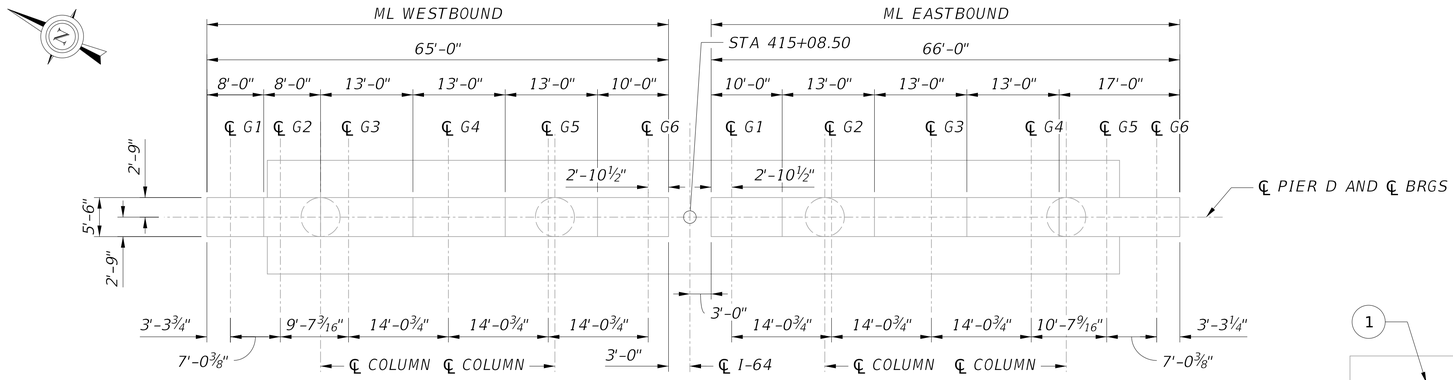

PIER D PLAN

(LOOKING STATION AHEAD)

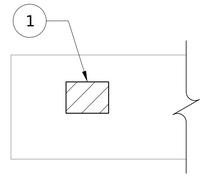

SECTION A-A

NOT TO SCALE

SUMMARY OF CONCRETE REPAIR QUANTITIES			
ID	UNIT	ESTIMATED QUANTITY	REPAIR
1	SF	1	C1
2	SF	1	C1
TOTAL C1 (DOCUMENTED)		2	
TOTAL C1 (ADJUSTED)		3	
TOTAL C2 (DOCUMENTED)		0	
TOTAL C2 (ADJUSTED)		0	

C1 QUANTITY INCLUDES BOTH C1B AND C1C REPAIRS.

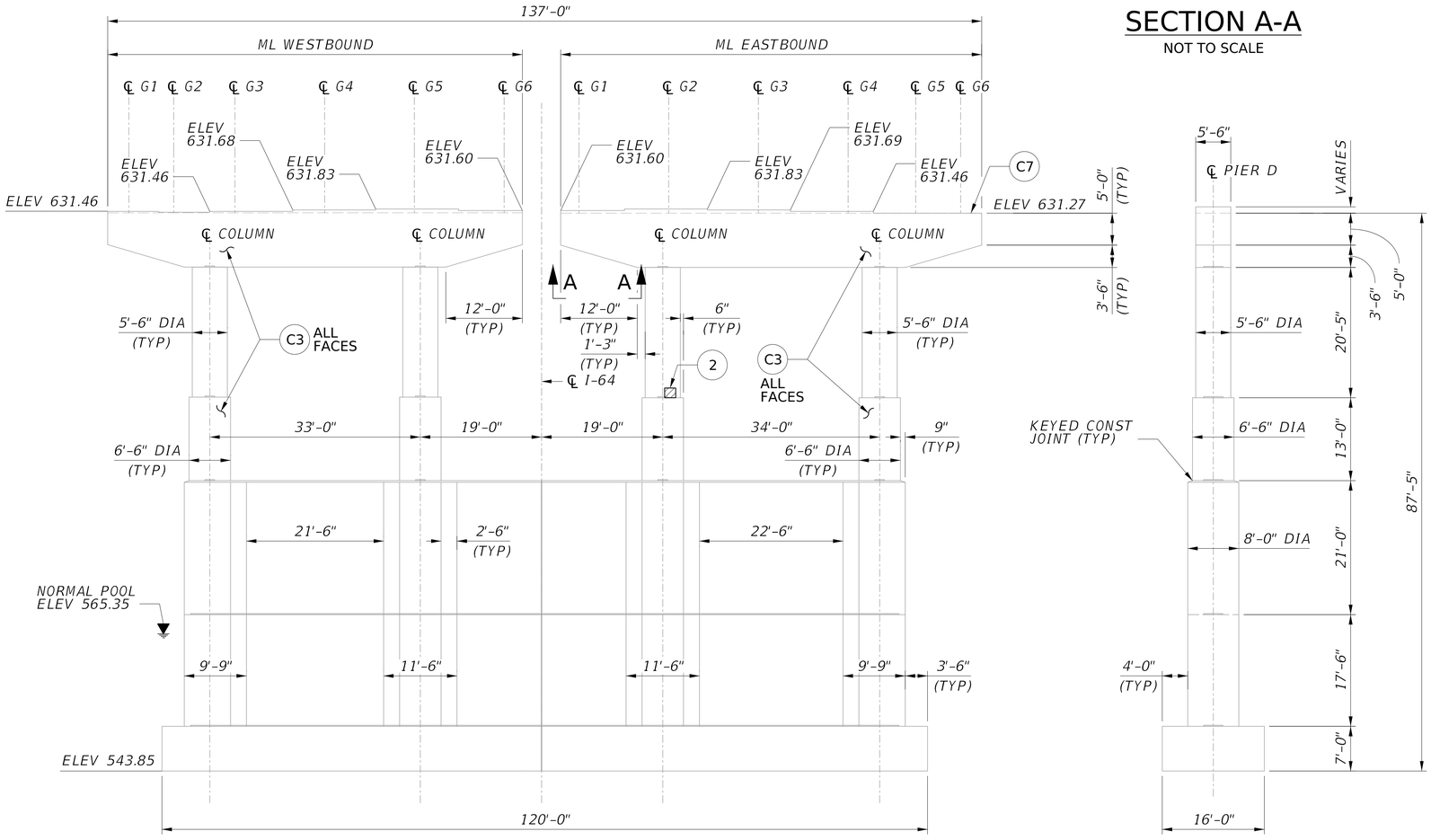

PIER D ELEVATION

(LOOKING STATION AHEAD)

PIER D END VIEW

(SOUTH FACE)

LEGEND:

- CONCRETE REMOVAL
- CONCRETE REPAIR
- (#) REPAIR ID NUMBER

NOTES:

1. FOR GENERAL NOTES, SEE SHEETS XX THRU XX.
2. ELEVATIONS SHOWN ARE FROM ORIGINAL CONSTRUCTION PLANS STATIONS CONVERTED TO NAVD 88 DATUM, AND ARE GIVEN AT ℄ PIER.

2 0 4 8 12 ft.

$^{3}/_{32}$" = 1'-0"

NO.	REVISION	DATE	BY

WEST VIRGINIA DEPARTMENT OF TRANSPORTATION
DIVISION OF HIGHWAYS
ENGINEERING DIVISION

I-64 OVER KANAWHA RIVER
EUGENE A. CARTER MEMORIAL BRIDGE +3

SUBSTRUCTURE REPAIR
PIER D (1 OF 2)

DESIGNED	DATE
LJG	08/25
DRAWN	
AFMO	08/25
CHECKED	
REVIEWED	

HDR ENGINEERING INC.
CONSULTING ENGINEERS
CHARLESTON, WV
681-341-6100

SHEET
OF
BRIDGE NO.
2563.6

SNOLEN $DD-MMM-YYYY HH:MM$ pw://pwhdruseas02.intranet.hdr:HDR_US_East_02/Documents/WV_DOT/WVDOT-Eugene_Carter_Bridge_3/6.0_CAD_BIM/6.2_WIP/HDR/6.2.2_Sheet_Files/23_Structure/2.127 Substructure Repair Pier D (1 of 2).dgn

PROJECT NUMBERS		DISTRICT	COUNTY	SHEET NO.	TOTAL
STATE	FEDERAL				
S320-64-57.44 00	NHPP-0064 (497)D	1	KANAWHA		

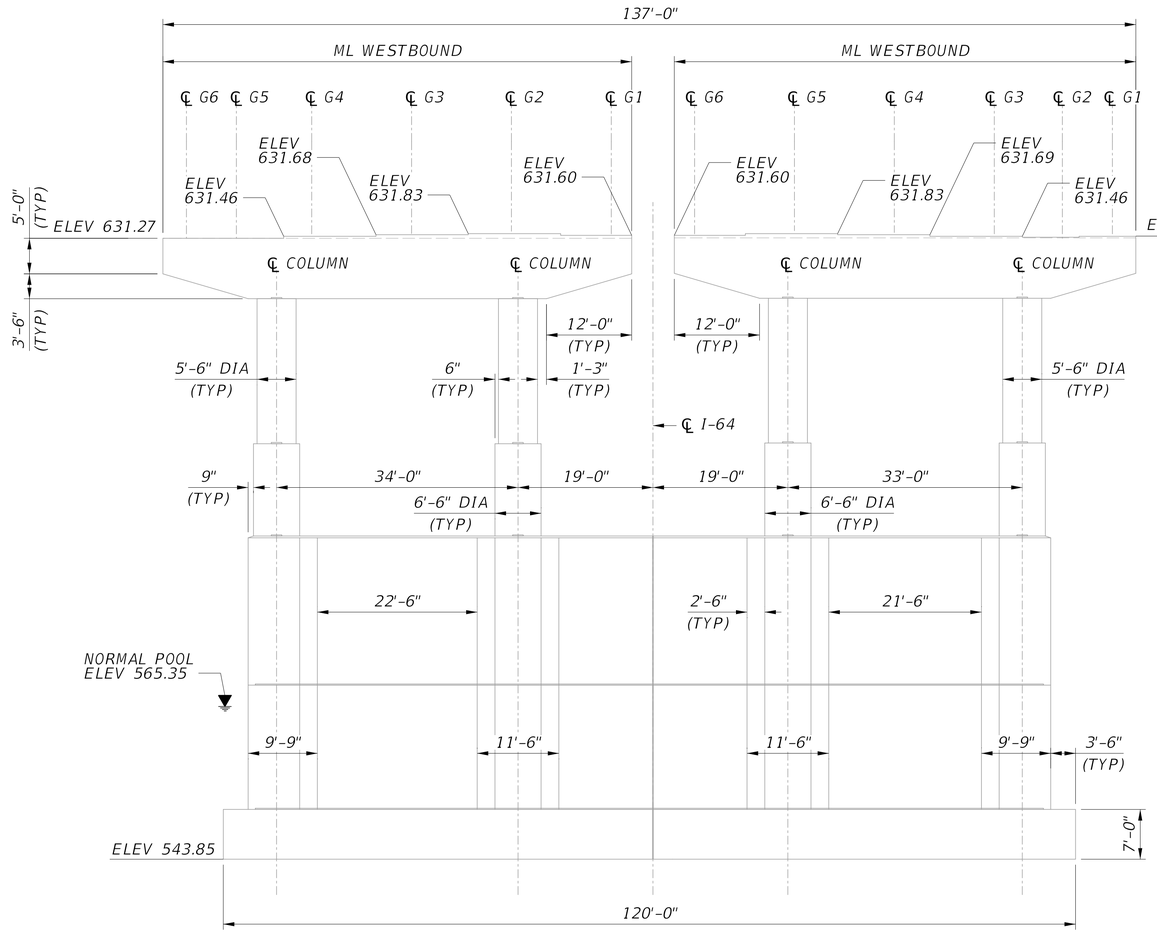

PIER D ELEVATION

(LOOKING STATION BACK)

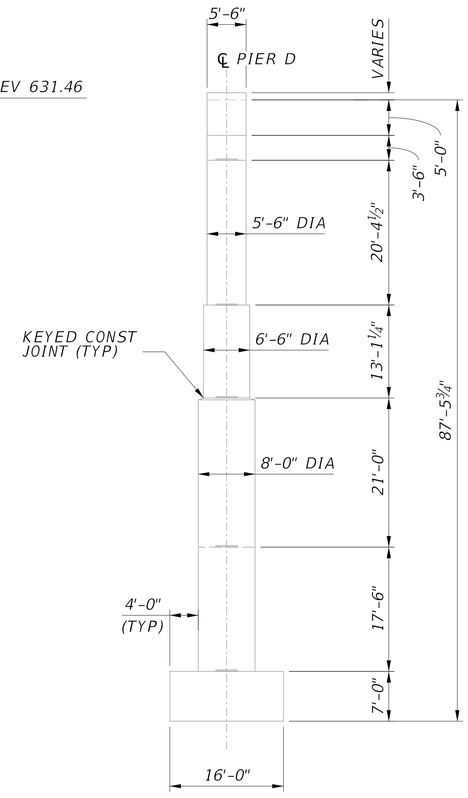

PIER D END VIEW

(NORTH FACE)

LEGEND:

- CONCRETE REMOVAL
- CONCRETE REPAIR
- (#) REPAIR ID NUMBER

2 0 4 8 12 ft.

3/32" = 1'-0"

NO.	REVISION	DATE	BY

WEST VIRGINIA DEPARTMENT OF TRANSPORTATION
DIVISION OF HIGHWAYS
ENGINEERING DIVISION

I-64 OVER KANAWHA RIVER
EUGENE A. CARTER MEMORIAL BRIDGE +3

SUBSTRUCTURE REPAIR
PIER D (2 OF 2)

DESIGNED	LJG
DATE	08/25
DRAWN	AFMO
DATE	08/25
CHECKED	
REVIEWED	

HDR ENGINEERING INC.
CONSULTING ENGINEERS
CHARLESTON, WV
681-341-6100

SHEET
OF
BRIDGE NO.
2563.6

SNOLEN $DD-MMM-YYYY HH:MM$ pw://pwhdruseas02.intranet.hdr:HDR_US_East_02/Documents/WV_DOT/WVDOT-Eugene_Carter_Bridge_3/6.0_CAD_BIM/6.2_WIP/HDR/6.2.2_Sheet_Files/23_Structure/2.128 Substructure Repair Pier D (2 of 2).dgn

PROJECT NUMBERS		DISTRICT	COUNTY	SHEET NO.	TOTAL
STATE	FEDERAL				
S320-64-57.44 00	NHPP-0064 (497)D	1	KANAWHA		

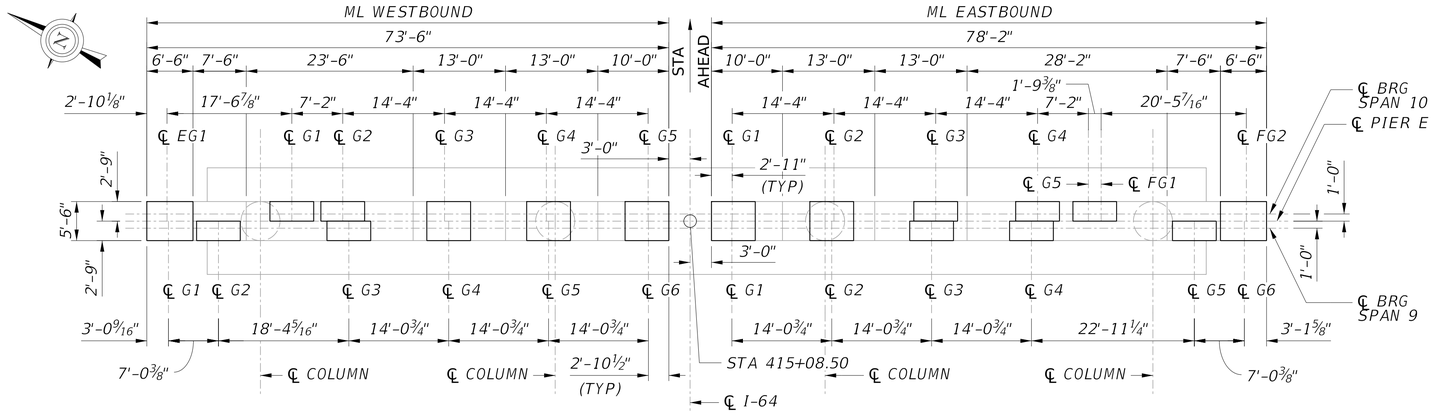

PIER E PLAN

(LOOKING STATION AHEAD)

SUMMARY OF CONCRETE REPAIR QUANTITIES			
ID	UNIT	ESTIMATED QUANTITY	REPAIR
1	SF	2	C1
2	SF	10	C1
3	SF	4	C1
TOTAL C1 (DOCUMENTED)		16	
TOTAL C1 (ADJUSTED)		24	
TOTAL C2 (DOCUMENTED)		0	
TOTAL C2 (ADJUSTED)		0	

C1 QUANTITY INCLUDES BOTH C1B AND C1C REPAIRS.

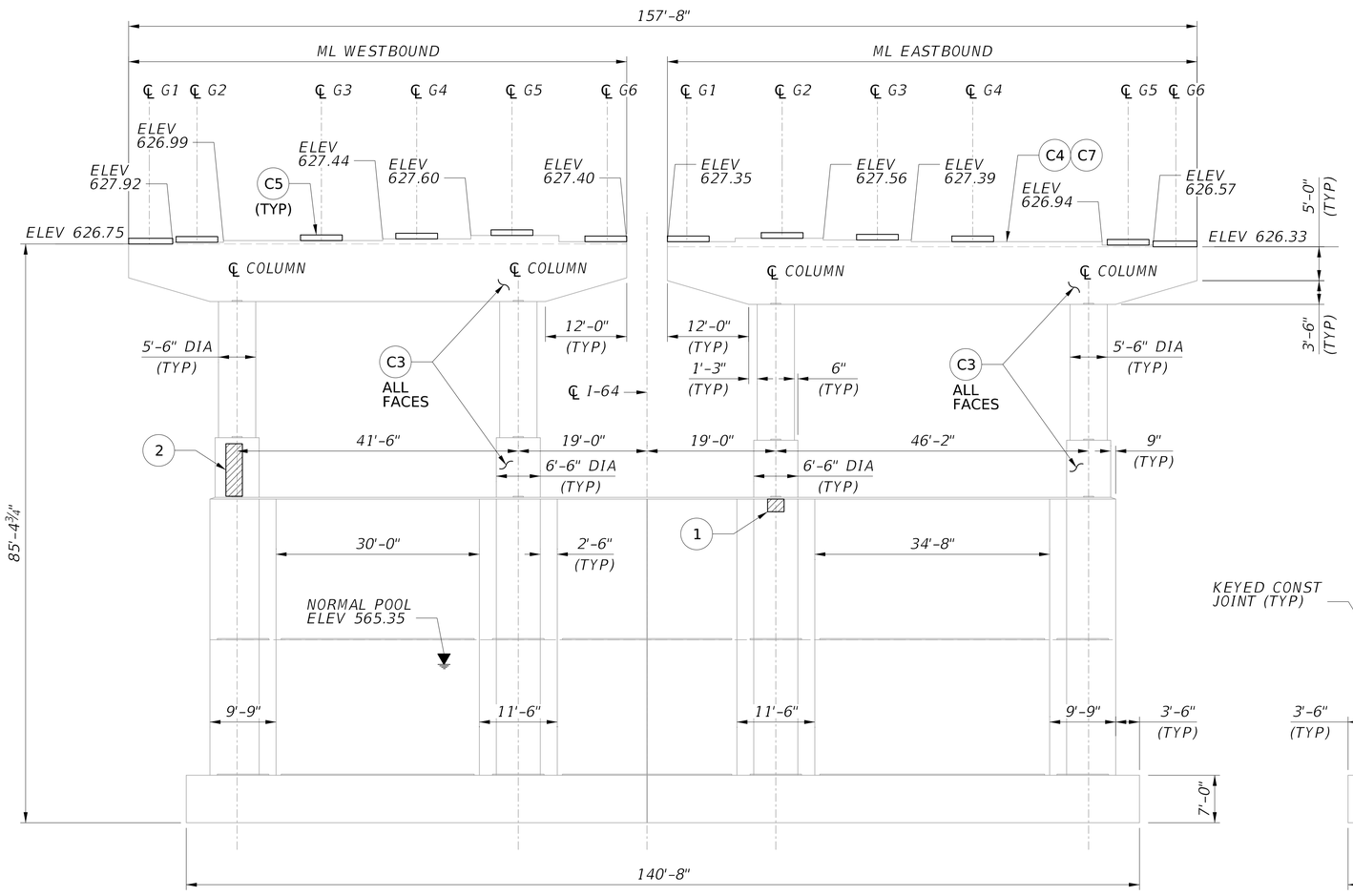

PIER E ELEVATION

(LOOKING STATION AHEAD)

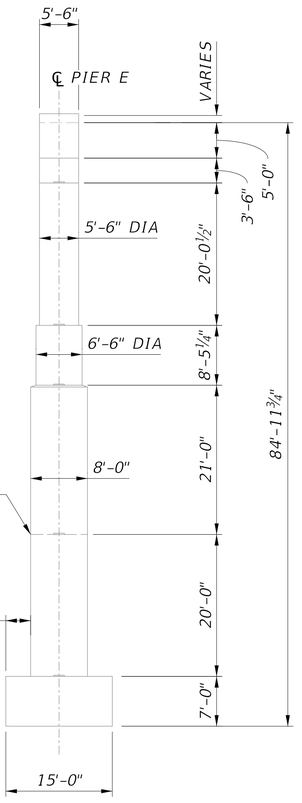

PIER E END VIEW

(SOUTH FACE)

LEGEND:

- CONCRETE REMOVAL
- CONCRETE REPAIR
- (#) REPAIR ID NUMBER

NOTES:

1. FOR GENERAL NOTES, SEE SHEETS XX THRU XX.
2. FOR PIER BEARING PEDESTAL DETAILS, SEE SHEETS XX THRU XX.
3. ELEVATIONS SHOWN ARE FROM ORIGINAL CONSTRUCTION PLANS STATIONS CONVERTED TO NAVD 88 DATUM, AND ARE GIVEN AT ℄ PIER.

2 0 4 8 12 ft.

3/32" = 1'-0"

NO.	REVISION	DATE	BY

WEST VIRGINIA DEPARTMENT OF TRANSPORTATION
DIVISION OF HIGHWAYS
ENGINEERING DIVISION

I-64 OVER KANAWHA RIVER
EUGENE A. CARTER MEMORIAL BRIDGE +3

SUBSTRUCTURE REPAIR PIER E (1 OF 2)

DESIGNED	DATE
LJG	08/25
DRAWN	
AFMO	08/25
CHECKED	
REVIEWED	

HDR ENGINEERING INC.
CONSULTING ENGINEERS
CHARLESTON, WV
681-341-6100

SHEET OF

BRIDGE NO. 2563.6

SNOLEN $DD-MMM-YYYY HH:MM$ pw://pwhdruseas02.Intranet.hdr:HDR_US_East_02/Documents/WV_DOT/WVDOT-Eugene_Carter_Bridge_3/6.0_CAD_BIM/6.2_WIP/HDR/6.2.2_Sheet_Files/23_Structure/2.129 Substructure Repair Pier E (1 of 2).dgn

PROJECT NUMBERS		DISTRICT	COUNTY	SHEET NO.	TOTAL
STATE	FEDERAL				
S320-64-57.44 00	NHPP-0064 (497)D	1	KANAWHA		

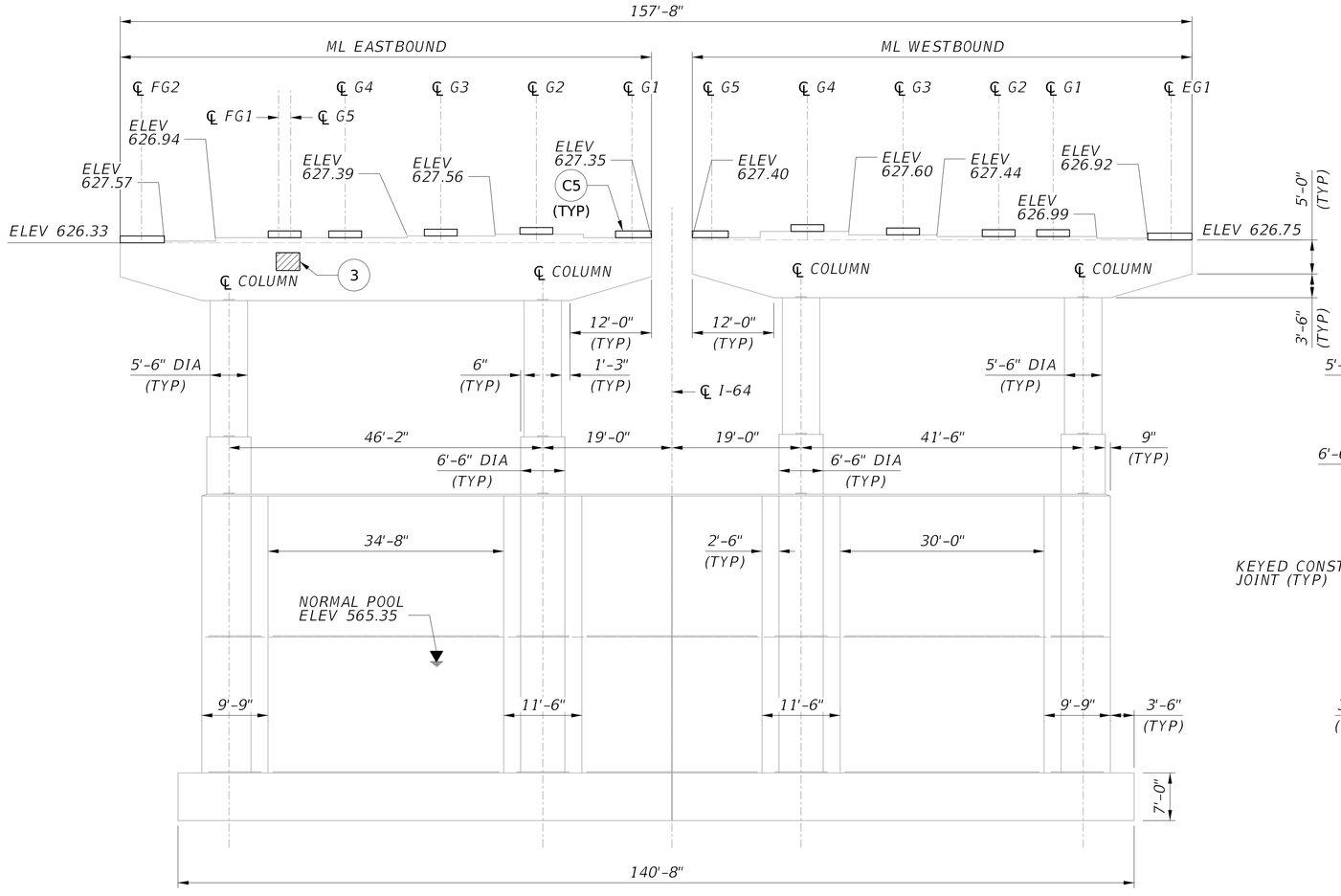

PIER E ELEVATION

(LOOKING STATION BACK)

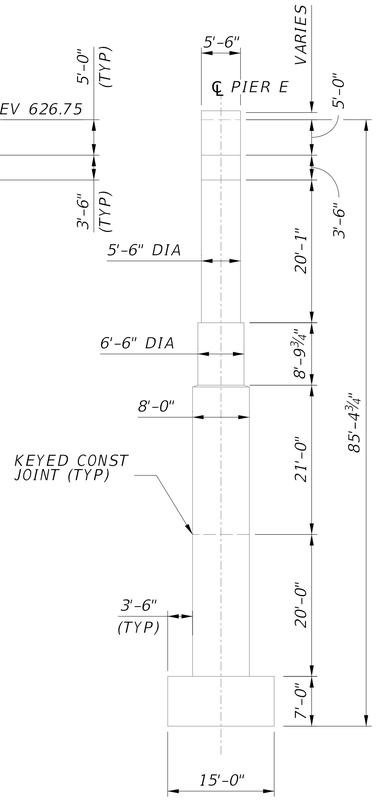

PIER E END VIEW

(NORTH FACE)

LEGEND:

- CONCRETE REMOVAL
- CONCRETE REPAIR
- (#) REPAIR ID NUMBER

2 0 4 8 12 ft.

3/32" = 1'-0"

NO.	REVISION	DATE	BY

WEST VIRGINIA DEPARTMENT OF TRANSPORTATION
DIVISION OF HIGHWAYS
ENGINEERING DIVISION

I-64 OVER KANAWHA RIVER
EUGENE A. CARTER MEMORIAL BRIDGE +3

SUBSTRUCTURE REPAIR
PIER E (2 OF 2)

DESIGNED	DATE
LJG	08/25
DRAWN	
AFMO	08/25
CHECKED	
REVIEWED	

HDR ENGINEERING INC.
CONSULTING ENGINEERS
CHARLESTON, WV
681-341-6100

SHEET OF

BRIDGE NO. 2563.6

SNOLEN $DD-MMM-YYYY HH:MM$ pw://pwhdruseas02.intranet.hdr:HDR_US_East_02/Documents/WV_DOT/WVDOT-Eugene_Carter_Bridge_3/6.0_CAD_BIM/6.2_WIP/HDR/6.2.2_Sheet_Files/23_Structure/2.130 Substructure Repair Pier E (2 of 2).dgn

PROJECT NUMBERS		DISTRICT	COUNTY	SHEET NO.	TOTAL
STATE	FEDERAL				
S320-64-57.44 00	NHPP-0064 (497)D	1	KANAWHA		

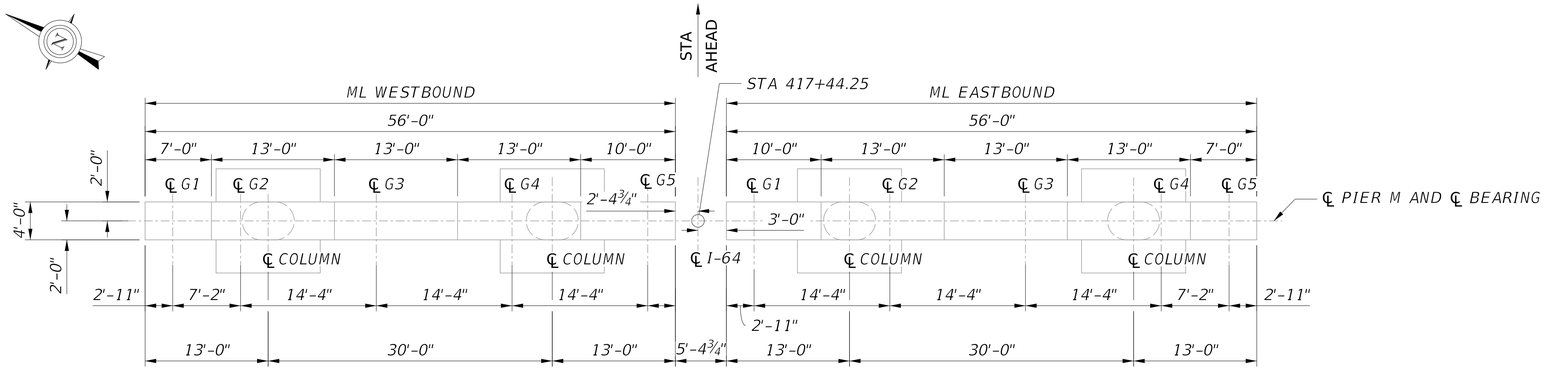

PIER M PLAN

(LOOKING STATION AHEAD)

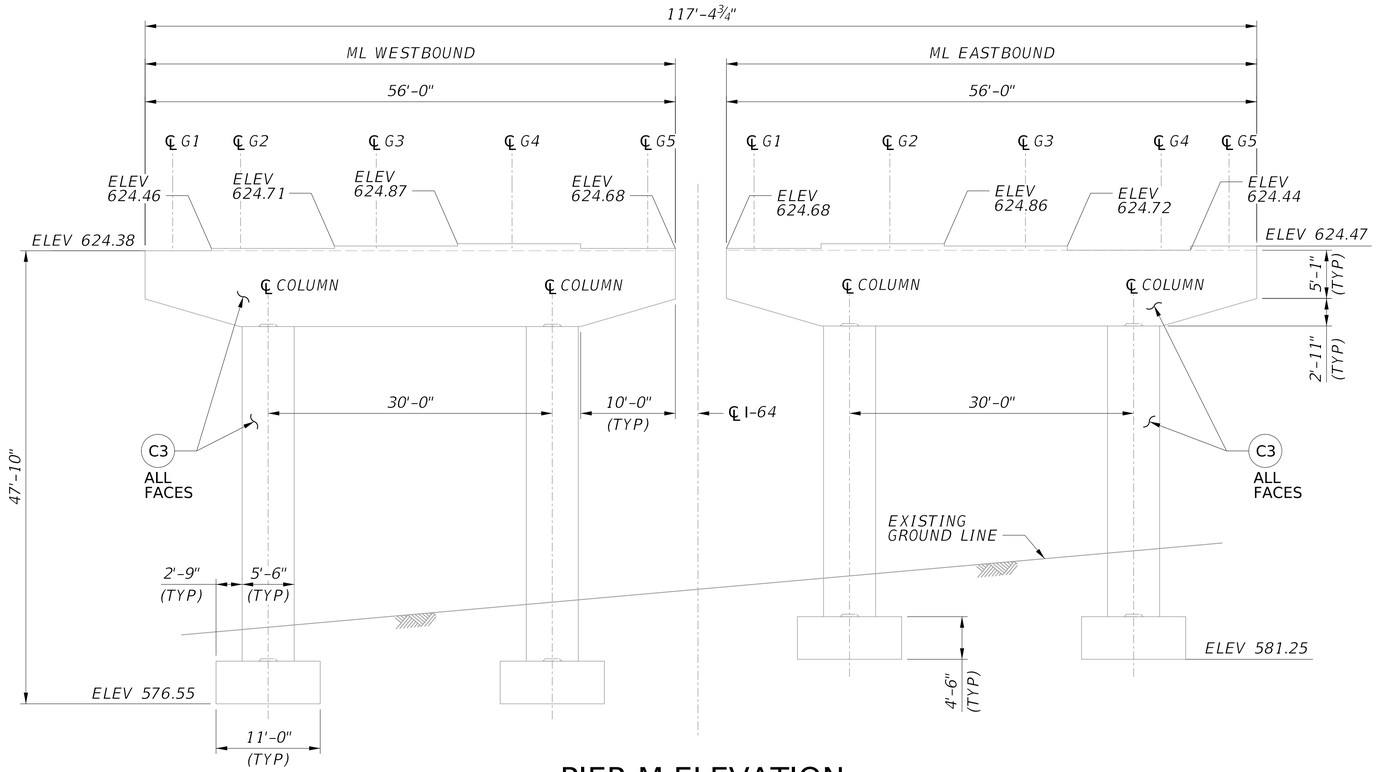

PIER M ELEVATION

(LOOKING STATION AHEAD)

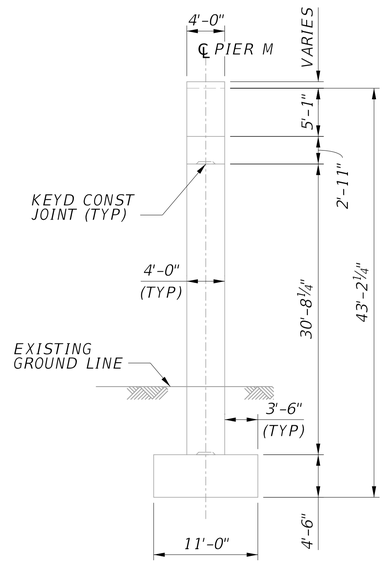

PIER M END VIEW

(SOUTH FACE)

2 0 4 8 ft.

⅛" = 1'-0"

** DOWNSPOUTING ON THIS PIER TO BE REPLACED

LEGEND:

- CONCRETE REMOVAL
- CONCRETE REPAIR
- (#) REPAIR ID NUMBER

NOTES:

1. FOR GENERAL NOTES, SEE SHEETS XX THRU XX.
2. ELEVATIONS SHOWN ARE FROM ORIGINAL CONSTRUCTION PLANS STATIONS CONVERTED TO NAVD 88 DATUM, AND ARE GIVEN AT ℄ PIER.

NO.	REVISION	DATE	BY

WEST VIRGINIA DEPARTMENT OF TRANSPORTATION
DIVISION OF HIGHWAYS
ENGINEERING DIVISION

I-64 OVER KANAWHA RIVER
EUGENE A. CARTER MEMORIAL BRIDGE +3

SUBSTRUCTURAL REPAIR PIER M (1 OF 2)

DESIGNED	DATE
LJG	08/25
DRAWN	
AFMO	08/25
CHECKED	
REVIEWED	

HDR ENGINEERING INC.
CONSULTING ENGINEERS
CHARLESTON, WV
681-341-6100

SHEET OF

BRIDGE NO. 2563.6

SNOLEN $DD-MMM-YYYY HH:MM$ pw://pwhdruseas02.intranet.hdr:HDR_US_East_02/Documents/WV_DOT/WVDOT-Eugene_Carter_Bridge_3/6.0_CAD_BIM/6.2_WIP/HDR/6.2.2_Sheet_Files/23_Structure/2.131 Substructure Repair Pier M (1 of 2).dgn

PROJECT NUMBERS		DISTRICT	COUNTY	SHEET NO.	TOTAL
STATE	FEDERAL				
S320-64-57.44 00	NHPP-0064 (497)D	1	KANAWHA		

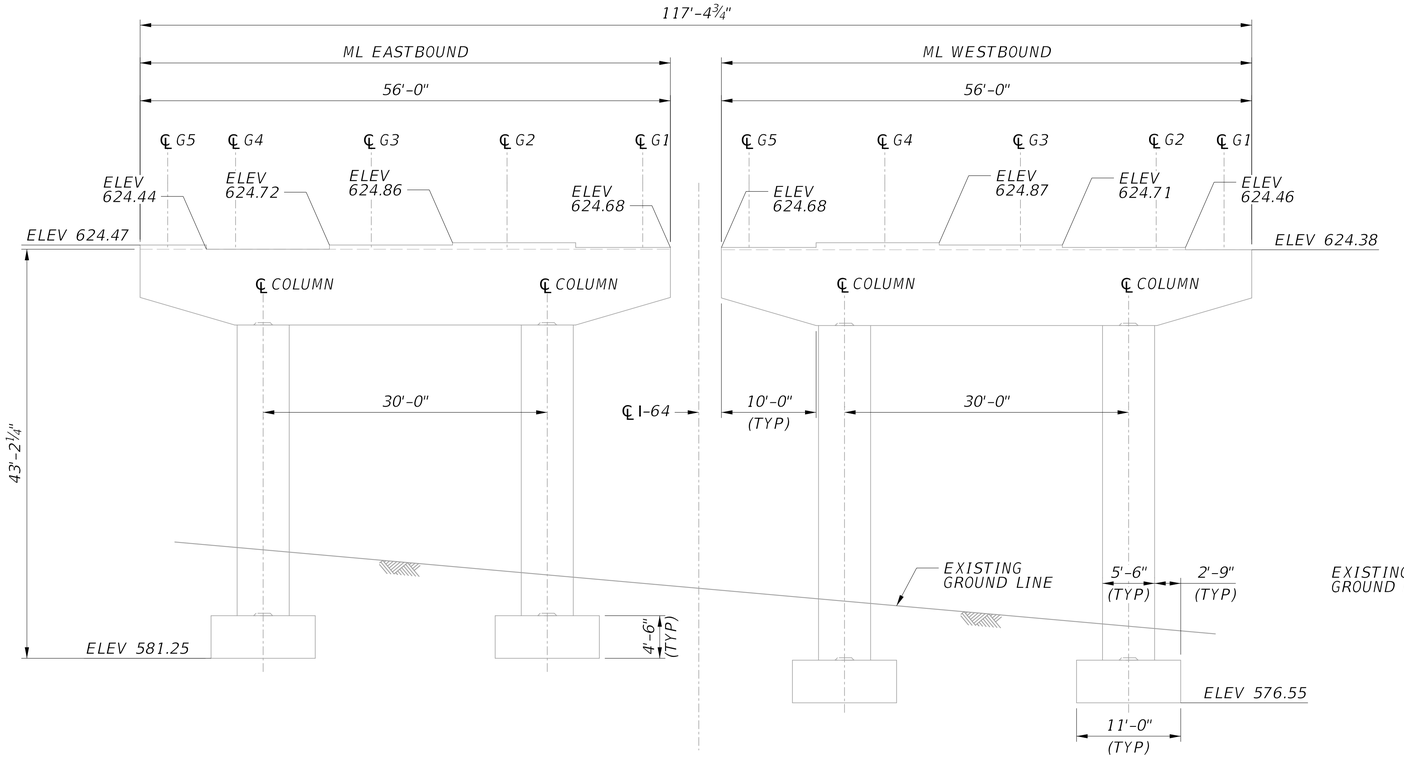

PIER M ELEVATION

(LOOKING STATION BACK)

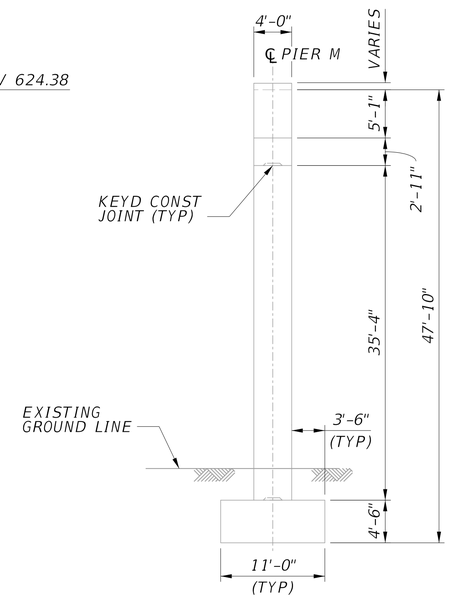

PIER M END VIEW

(NORTH FACE)

LEGEND:

- CONCRETE REMOVAL
- CONCRETE REPAIR
- (#) REPAIR ID NUMBER

2 0 4 8 ft.

⅛" = 1'-0"

NO.	REVISION	DATE	BY

WEST VIRGINIA DEPARTMENT OF TRANSPORTATION
DIVISION OF HIGHWAYS
ENGINEERING DIVISION

I-64 OVER KANAWHA RIVER
EUGENE A. CARTER MEMORIAL BRIDGE +3

SUBSTRUCTURAL REPAIR
PIER M (2 OF 2)

DESIGNED	DATE
LJG	08/25
DRAWN	
AFMO	08/25
CHECKED	
REVIEWED	

HDR ENGINEERING INC.
CONSULTING ENGINEERS
CHARLESTON, WV
681-341-6100

SHEET OF

BRIDGE NO. 2563.6

SNOLEN $DD-MMM-YYYY HH:MM$ pw://pwhdruseas02.intranet.hdr:HDR_US_East_02/Documents/WV_DOT/WVDOT-Eugene_Carter_Bridge_3/6.0_CAD_BIM/6.2_WIP/HDR/6.2.2_Sheet_Files/23_Structure/2.132 Substructure Repair Pier M (2 of 2).dgn

PROJECT NUMBERS		DISTRICT	COUNTY	SHEET NO.	TOTAL
STATE	FEDERAL				
S320-64-57.44 00	NHPP-0064 (497)D	1	KANAWHA		

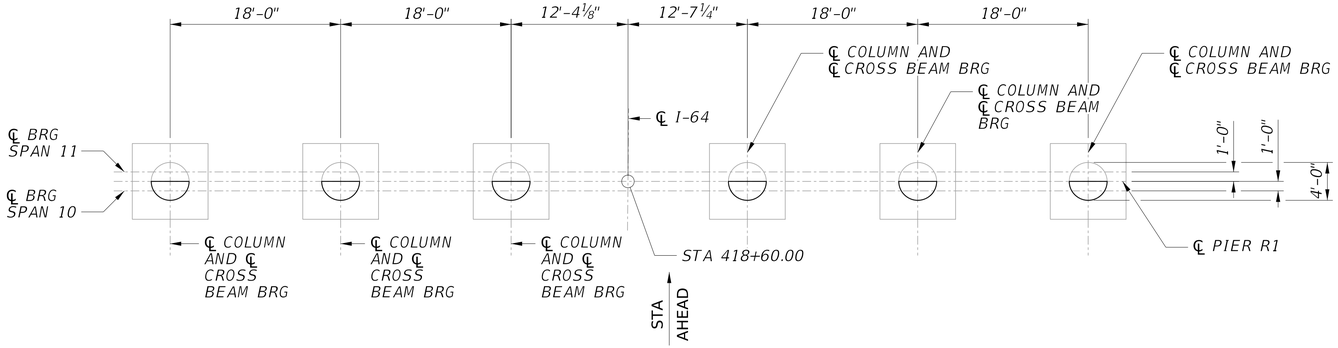

PIER R1 PLAN

(LOOKING STATION AHEAD)

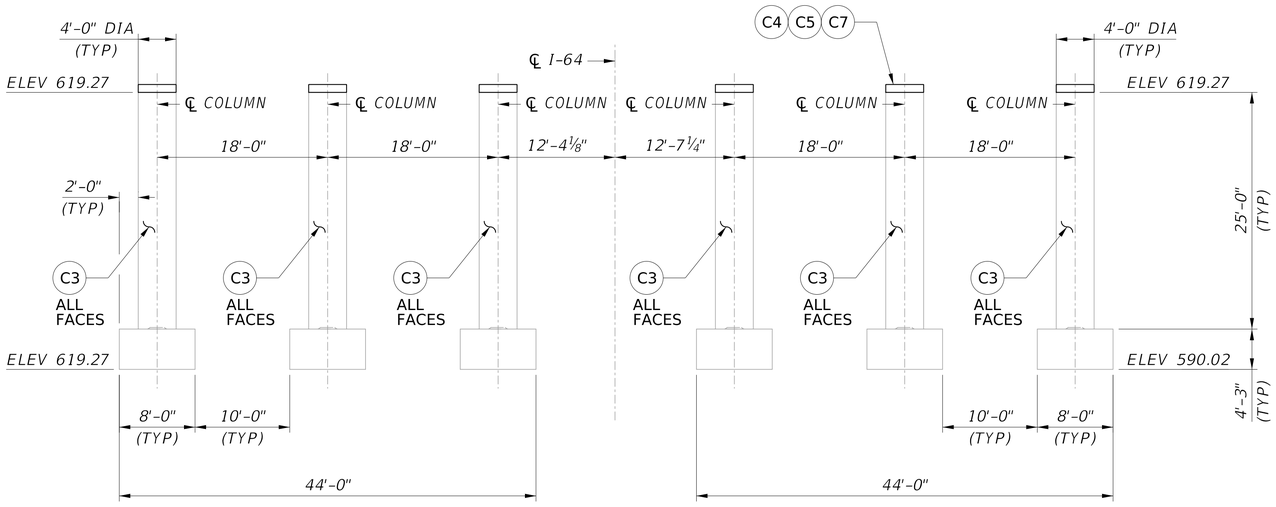

PIER R1 ELEVATION

(LOOKING STATION AHEAD)

SUMMARY OF CONCRETE REPAIR QUANTITIES			
ID	UNIT	ESTIMATED QUANTITY	REPAIR
1	SF	1	C1
2	SF	1	C1
TOTAL C1 (DOCUMENTED)		2	
TOTAL C1 (ADJUSTED)		3	
TOTAL C2 (DOCUMENTED)		0	
TOTAL C2 (ADJUSTED)		0	

C1 QUANTITY INCLUDES BOTH C1B AND C1C REPAIRS.

LEGEND:

- CONCRETE REMOVAL
- CONCRETE REPAIR
- (#) REPAIR ID NUMBER

NOTES:

1. FOR GENERAL NOTES, SEE SHEETS XX THRU XX.
2. FOR PIER BEARING PEDESTAL DETAILS, SEE SHEETS XX THRU XX.
3. ELEVATIONS SHOWN ARE FROM ORIGINAL CONSTRUCTION PLANS STATIONS CONVERTED TO NAVD 88 DATUM, AND ARE GIVEN AT ℄ PIER.

2 0 4 8 ft.

⅛" = 1'-0"

NO.	REVISION	DATE	BY

WEST VIRGINIA DEPARTMENT OF TRANSPORTATION
DIVISION OF HIGHWAYS
ENGINEERING DIVISION

I-64 OVER KANAWHA RIVER
EUGENE A. CARTER MEMORIAL BRIDGE +3

SUBSTRUCTURE REPAIR PIER R1 (1 OF 2)

DESIGNED	DATE
LJG	05/24
DRAWN	
AFMO	05/24
CHECKED	
REVIEWED	

HDR ENGINEERING INC.
CONSULTING ENGINEERS
CHARLESTON, WV
681-341-6100

SHEET OF

BRIDGE NO. 2563.6

SNOLEN $DD-MMM-YYYY HH:MM$ pw://pwhdruseas02.intranet.hdr:HDR_US_East_02/Documents/WV_DOT/WVDOT-Eugene_Carter_Bridge_3/6.0_CAD_BIM/6.2_WIP/HDR/6.2.2_Sheet_Files/23_Structure/2.133 Substructure Repair Pier R1 (1 of 2).dgn

PROJECT NUMBERS		DISTRICT	COUNTY	SHEET NO.	TOTAL
STATE	FEDERAL				
S320-64-57.44 00	NHPP-0064 (497)D	1	KANAWHA		

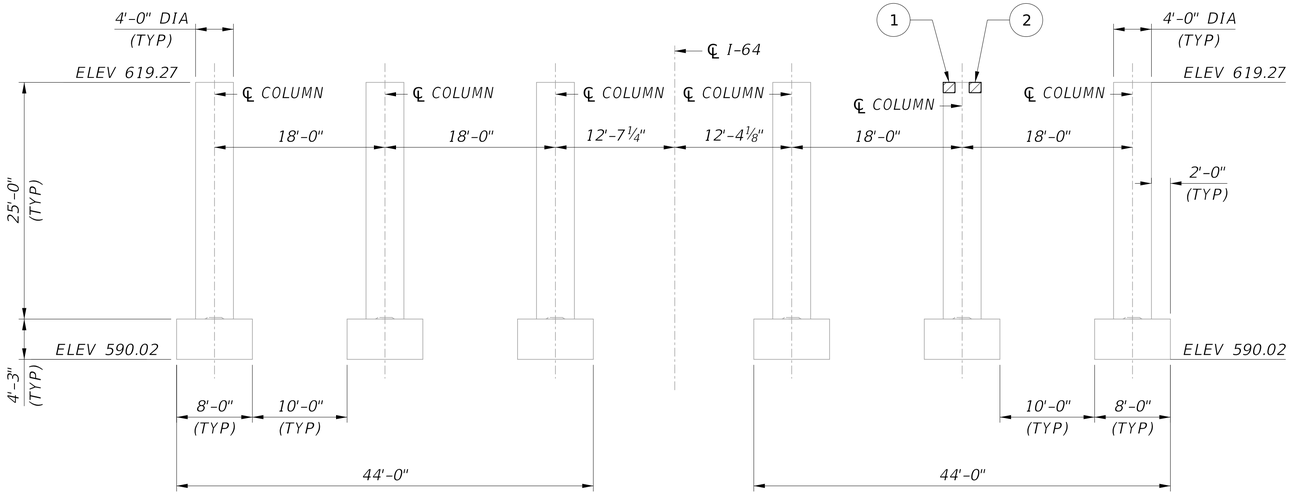

PIER R1 ELEVATION

(LOOKING STATION BACK)

LEGEND:

- CONCRETE REMOVAL
- CONCRETE REPAIR
- (#) REPAIR ID NUMBER

2 0 4 8 ft.

⅛" = 1'-0"

NO.	REVISION	DATE	BY

WEST VIRGINIA DEPARTMENT OF TRANSPORTATION
DIVISION OF HIGHWAYS
ENGINEERING DIVISION

I-64 OVER KANAWHA RIVER
EUGENE A. CARTER MEMORIAL BRIDGE +3

SUBSTRUCTURE REPAIR
PIER R1 (2 OF 2)

DESIGNED LJG	DATE 05/24
DRAWN AFMO	05/24
CHECKED	
REVIEWED	

HDR ENGINEERING INC.
CONSULTING ENGINEERS
CHARLESTON, WV
681-341-6100

SHEET OF

BRIDGE NO. 2563.6

SNOLEN $DD-MMM-YYYY HH:MM$ pw://pwhdruseas02.intranet.hdr:HDR_US_East_02/Documents/WV_DOT/WVDOT-Eugene_Carter_Bridge_3/6.0_CAD_BIM/6.2_WIP/HDR/6.2.2_Sheet_Files/23_Structure/2.134 Substructure Repair Pier R1 (2 of 2).dgn

PROJECT NUMBERS		DISTRICT	COUNTY	SHEET NO.	TOTAL
STATE	FEDERAL				
S320-64-57.44 00	NHPP-0064 (497)D	1	KANAWHA		

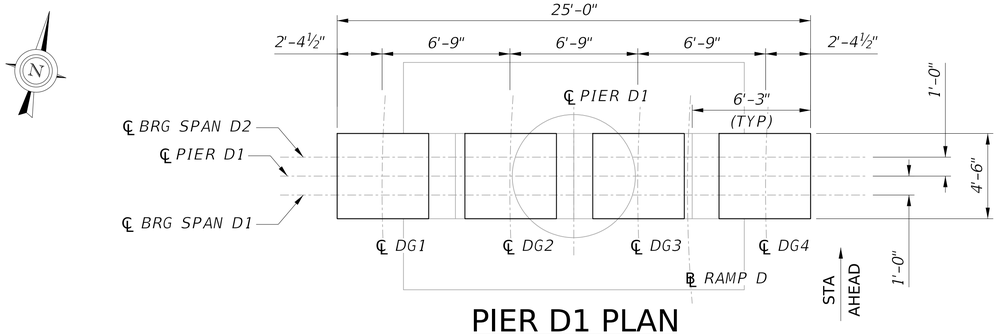

PIER D1 PLAN

(LOOKING STATION AHEAD)

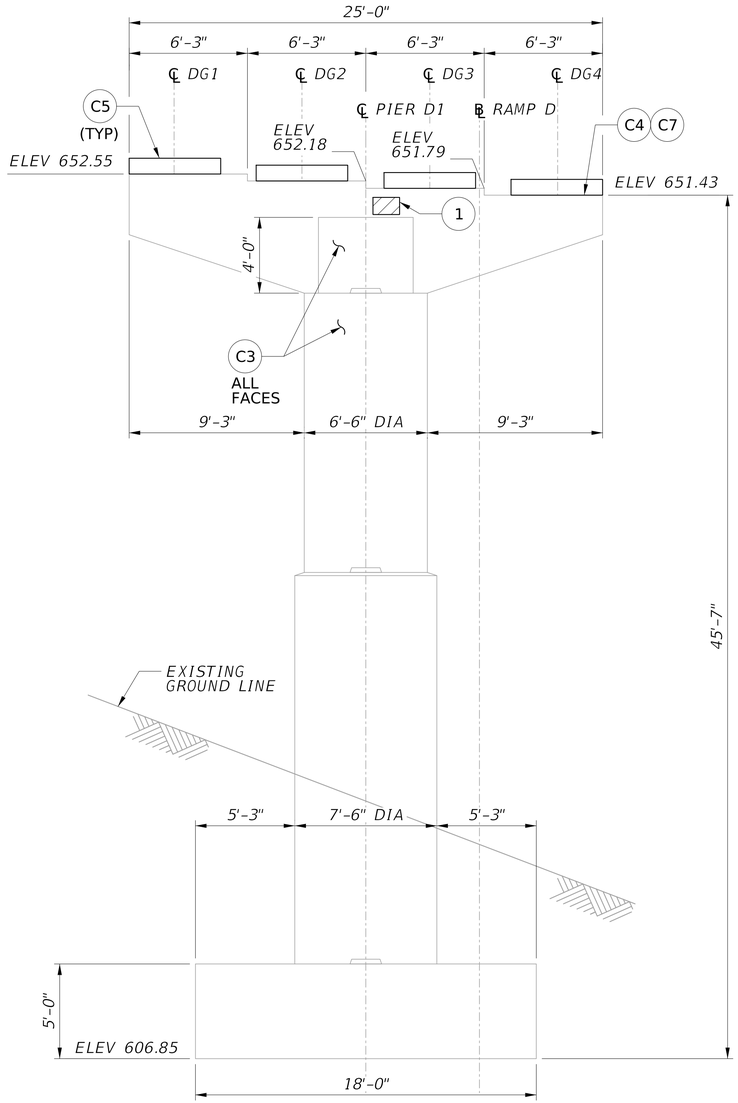

PIER D1 ELEVATION

(LOOKING STATION AHEAD)

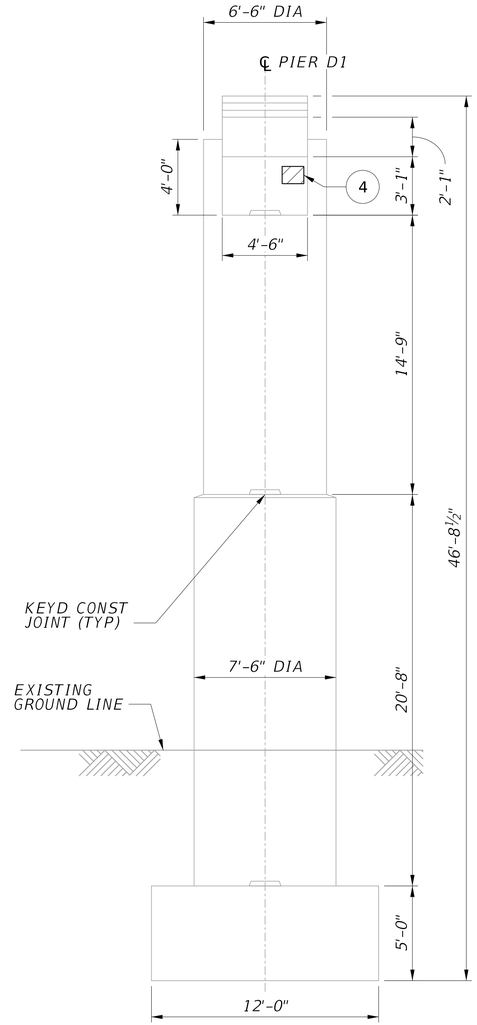

PIER D1 END VIEW

(EAST FACE)
(END TOWARDS RAILROAD)

SUMMARY OF CONCRETE REPAIR QUANTITIES

ID	UNIT	ESTIMATED QUANTITY	REPAIR
1	SF	2	C1
2	SF	3	C1
3	SF	5	C1
4	SF	1	C1
TOTAL C1 (DOCUMENTED)		11	
TOTAL C1 (ADJUSTED)		17	
TOTAL C2 (DOCUMENTED)		0	
TOTAL C2 (ADJUSTED)		0	

C1 QUANTITY INCLUDES BOTH C1B AND C1C REPAIRS.

LEGEND:

CONCRETE REMOVAL

CONCRETE REPAIR

REPAIR ID NUMBER

** DOWNSPOUTING ON THIS PIER TO BE REPLACED

NOTES:

1. FOR GENERAL NOTES, SEE SHEETS XX THRU XX.
2. FOR PIER BEARING PEDESTAL DETAILS, SEE SHEETS XX THRU XX.
3. ELEVATIONS SHOWN ARE FROM ORIGINAL CONSTRUCTION PLANS STATIONS CONVERTED TO NAVD 88 DATUM, AND ARE GIVEN AT ℄ PIER.

2 0 2 4 ft.
¼" = 1'-0"

NO.	REVISION	DATE	BY

WEST VIRGINIA DEPARTMENT OF TRANSPORTATION
DIVISION OF HIGHWAYS
ENGINEERING DIVISION

I-64 OVER KANAWHA RIVER
EUGENE A. CARTER MEMORIAL BRIDGE +3

SUBSTRUCTURE REPAIR
PIER D1 (1 OF 2)

DESIGNED	DATE
LJG	08/25
DRAWN	
AFMO	08/25
CHECKED	
REVIEWED	

HDR ENGINEERING INC.
CONSULTING ENGINEERS
CHARLESTON, WV
681-341-6100

SHEET OF

BRIDGE NO. 2563.6

SNOLEN $DD-MMM-YYYY HH:MM$ pw://pwhdruseas02.intranet.hdr:HDR_US_East_02/Documents/WV_DOT/WVDOT-Eugene_Carter_Bridge_3/6.0_CAD_BIM/6.2_WIP/HDR/6.2.2_Sheet_Files/23_Structure/2.161 Substructure Repair Pier D1 (1 of 2).dgn

PROJECT NUMBERS		DISTRICT	COUNTY	SHEET NO.	TOTAL
STATE	FEDERAL				
S320-64-57.44 00	NHPP-0064 (497)D	1	KANAWHA		

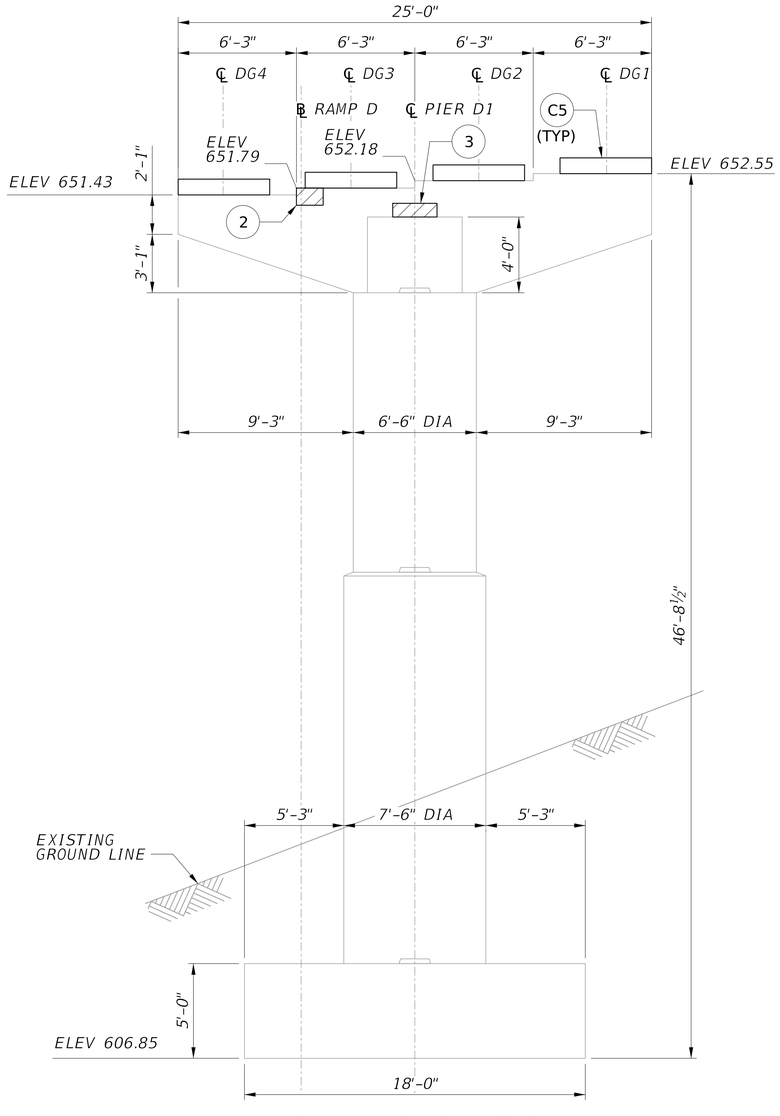

PIER D1 ELEVATION

(LOOKING STATION BACK)
(RAILROAD SIDE)

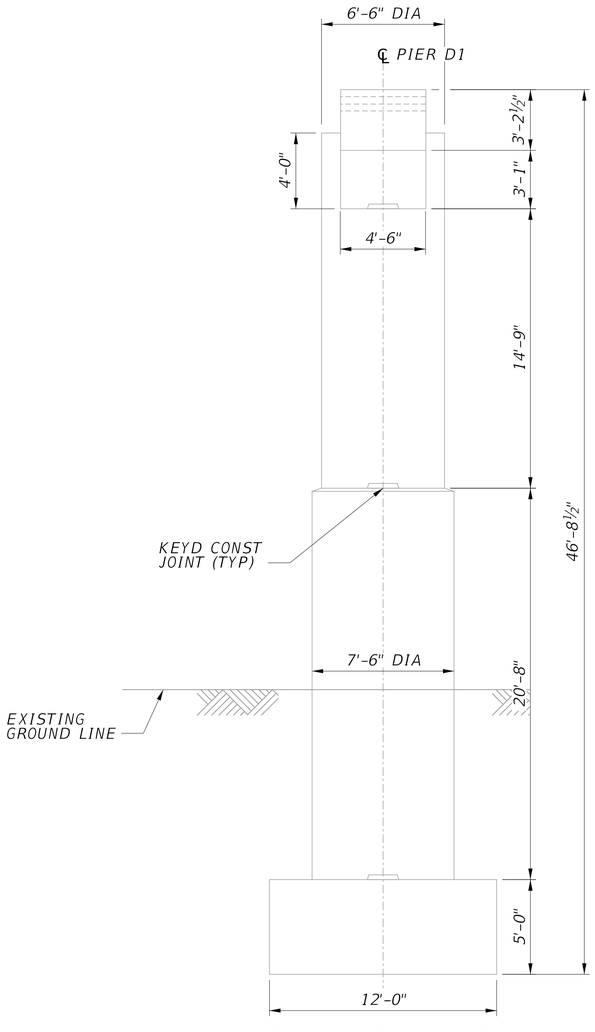

PIER D1 END VIEW

(WEST FACE)

LEGEND:

- CONCRETE REMOVAL
- CONCRETE REPAIR
- (#) REPAIR ID NUMBER

2 0 2 4 ft.

¼" = 1'-0"

NO.	REVISION	DATE	BY

WEST VIRGINIA DEPARTMENT OF TRANSPORTATION
DIVISION OF HIGHWAYS
ENGINEERING DIVISION

I-64 OVER KANAWHA RIVER
EUGENE A. CARTER MEMORIAL BRIDGE +3

SUBSTRUCTURE REPAIR
PIER D1 (2 OF 2)

DESIGNED	LJG	DATE	08/25
DRAWN	AFMO		08/25
CHECKED			
REVIEWED			

HDR ENGINEERING INC.
CONSULTING ENGINEERS
CHARLESTON, WV
681-341-6100

SHEET
OF
BRIDGE NO.
2563.6

SNOLEN $DD-MMM-YYYY HH:MM$ pw://pwhdruseas02.intranet.hdr:HDR_US_East_02/Documents/WV_DOT/WVDOT-Eugene_Carter_Bridge_3/6.0_CAD_BIM/6.2_WIP/HDR/6.2.2_Sheet_Files/23_Structure/2.162 Substructure Repair Pier D1 (2 of 2).dgn

PROJECT NUMBERS		DISTRICT	COUNTY	SHEET NO.	TOTAL
STATE	FEDERAL				
S320-64-57.44 00	NHPP-0064 (497)D	1	KANAWHA		

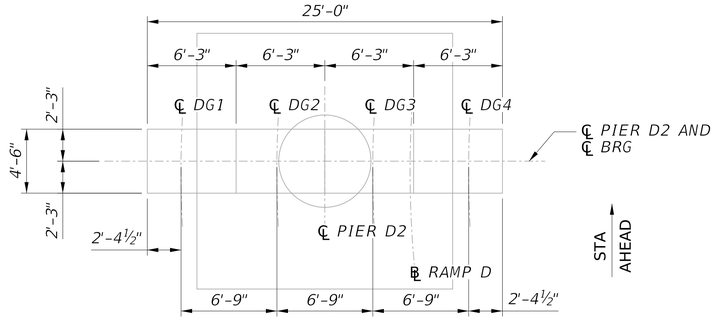

PIER D2 PLAN

(LOOKING STATION AHEAD)

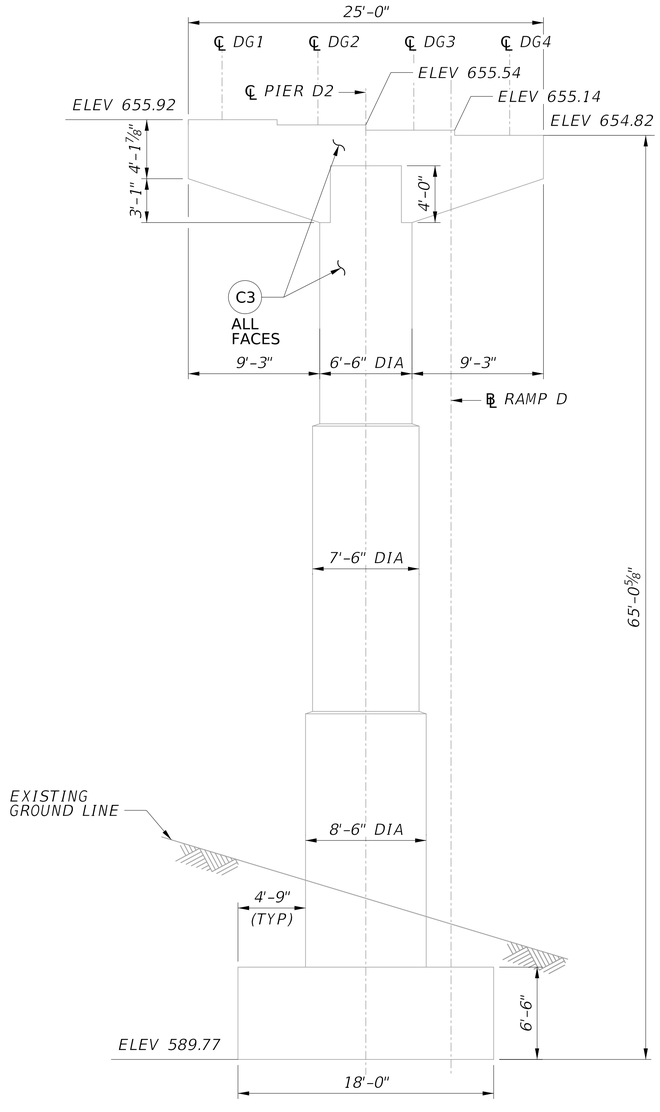

PIER D2 ELEVATION

(LOOKING STATION AHEAD)
(RAILROAD SIDE)

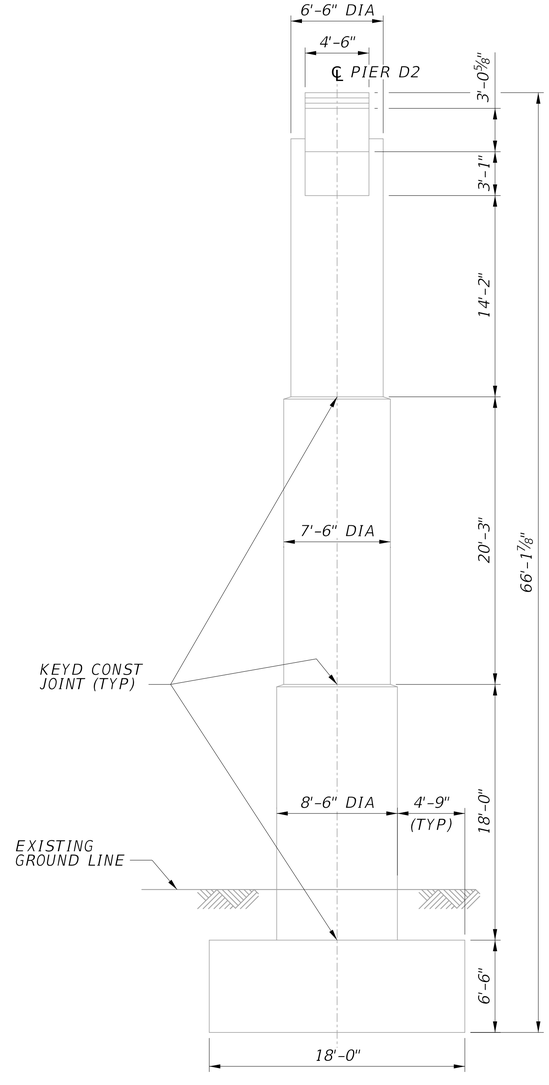

PIER D2 END VIEW

(EAST FACE)

LEGEND:

- CONCRETE REMOVAL
- CONCRETE REPAIR
- (#) REPAIR ID NUMBER

** DOWNSPOUTING ON THIS PIER TO BE REPLACED

NOTES:

1. FOR GENERAL NOTES, SEE SHEETS XX THRU XX.
2. ELEVATIONS SHOWN ARE FROM ORIGINAL CONSTRUCTION PLANS STATIONS CONVERTED TO NAVD 88 DATUM, AND ARE GIVEN AT ℄ PIER.

2 0 2 4 6 ft.
3/16" = 1'-0"

NO.	REVISION	DATE	BY

WEST VIRGINIA DEPARTMENT OF TRANSPORTATION
DIVISION OF HIGHWAYS
ENGINEERING DIVISION

I-64 OVER KANAWHA RIVER
EUGENE A. CARTER MEMORIAL BRIDGE +3

SUBSTRUCTURE REPAIR PIER D2 (1 OF 2)

DESIGNED	DATE
LJG	08/25
DRAWN	
AFMO	08/25
CHECKED	
REVIEWED	

HDR ENGINEERING INC.
CONSULTING ENGINEERS
CHARLESTON, WV
681-341-6100

SHEET OF
BRIDGE NO. 2563.6

SNOLEN $DD-MMM-YYYY HH:MM$ pw://pwhdruseas02.Intranet.hdr:HDR_US_East_02/Documents/WV_DOT/WVDOT-Eugene_Carter_Bridge_3/6.0_CAD_BIM/6.2_WIP/HDR/6.2.2_Sheet_Files/23_Structure/2.163 Substructure Repair Pier D2 (1 of 2).dgn

PROJECT NUMBERS		DISTRICT	COUNTY	SHEET NO.	TOTAL
STATE	FEDERAL				
S320-64-57.44 00	NHPP-0064 (497)D	1	KANAWHA		

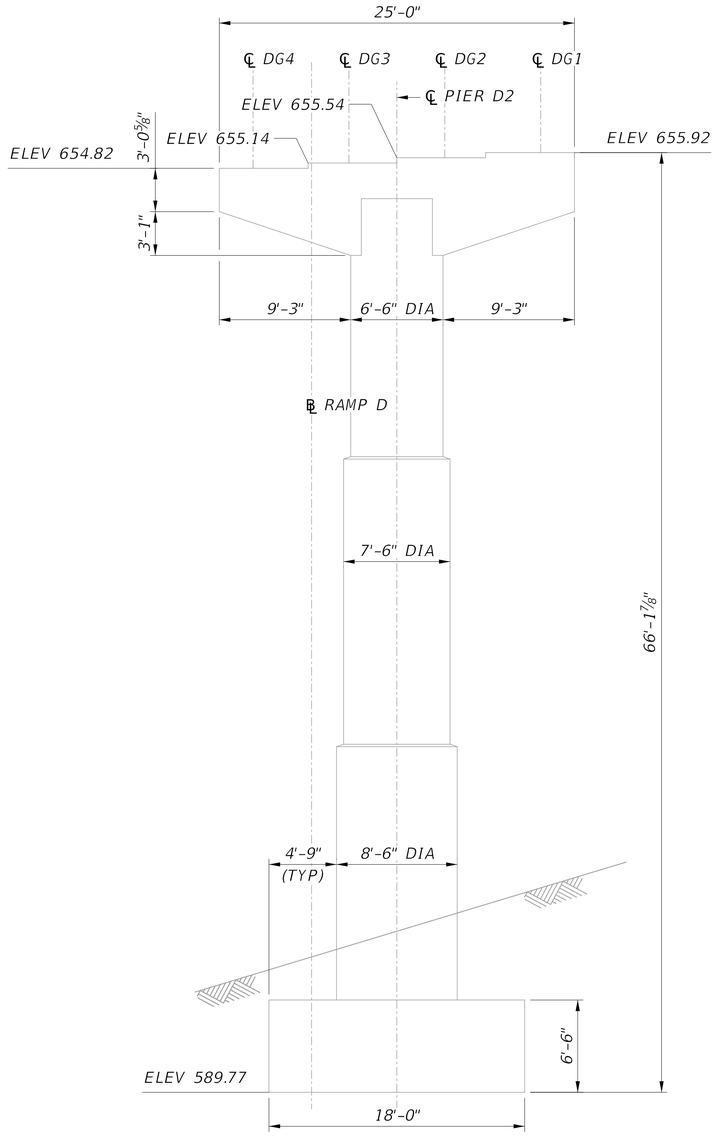

PIER D2 ELEVATION

(LOOKING STATION BACK)

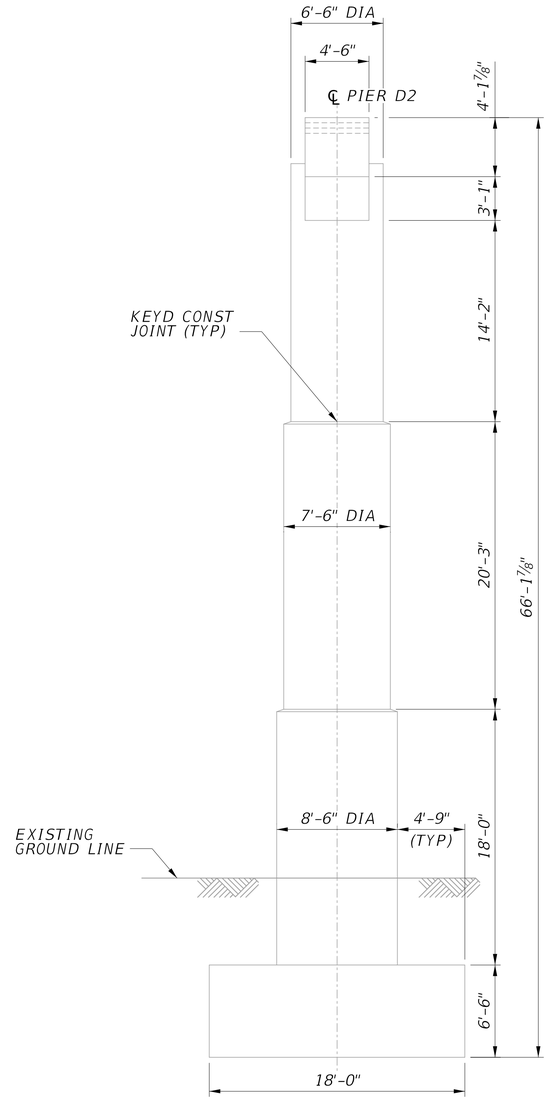

PIER D2 END VIEW

(WEST FACE)
(END TOWARDS RAILROAD)

LEGEND:

- CONCRETE REMOVAL
- CONCRETE REPAIR
- (#) REPAIR ID NUMBER

2 0 2 4 6 ft.

3/16" = 1'-0"

NO.	REVISION	DATE	BY

WEST VIRGINIA DEPARTMENT OF TRANSPORTATION
DIVISION OF HIGHWAYS
ENGINEERING DIVISION

I-64 OVER KANAWHA RIVER
EUGENE A. CARTER MEMORIAL BRIDGE +3

SUBSTRUCTURE REPAIR
PIER D2 (2 OF 2)

DESIGNED	LJG	DATE	08/25
DRAWN	AFMO		08/25
CHECKED			
REVIEWED			

HDR ENGINEERING INC.
CONSULTING ENGINEERS
CHARLESTON, WV
681-341-6100

SHEET OF

BRIDGE NO. 2563.6

SNOLEN $DD-MMM-YYYY HH:MM$ pw://pwhdruseas02.intranet.hdr:HDR_US_East_02/Documents/WV_DOT/WVDOT-Eugene_Carter_Bridge_3/6.0_CAD_BIM/6.2_WIP/HDR/6.2.2_Sheet_Files/23_Structure/2.164 Substructure Repair Pier D2 (2 of 2).dgn

PROJECT NUMBERS		DISTRICT	COUNTY	SHEET NO.	TOTAL
STATE	FEDERAL				
S320-64-57.44 00	NHPP-0064 (497)D	1	KANAWHA		

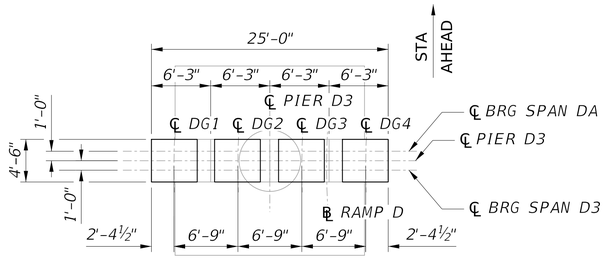

PIER D3 PLAN

(LOOKING STATION AHEAD)

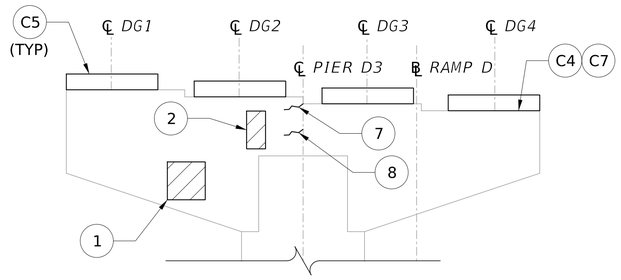

PIER D3 CAP ELEVATION

(LOOKING STATION AHEAD)

2 0 2 4 ft.

¼" = 1'-0"

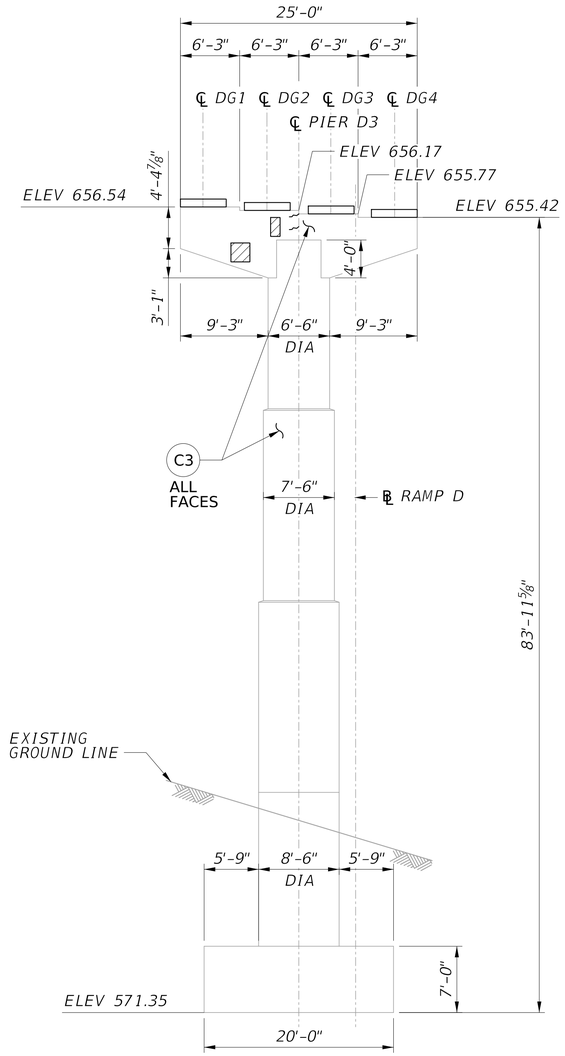

PIER D3 ELEVATION

(LOOKING STATION AHEAD)

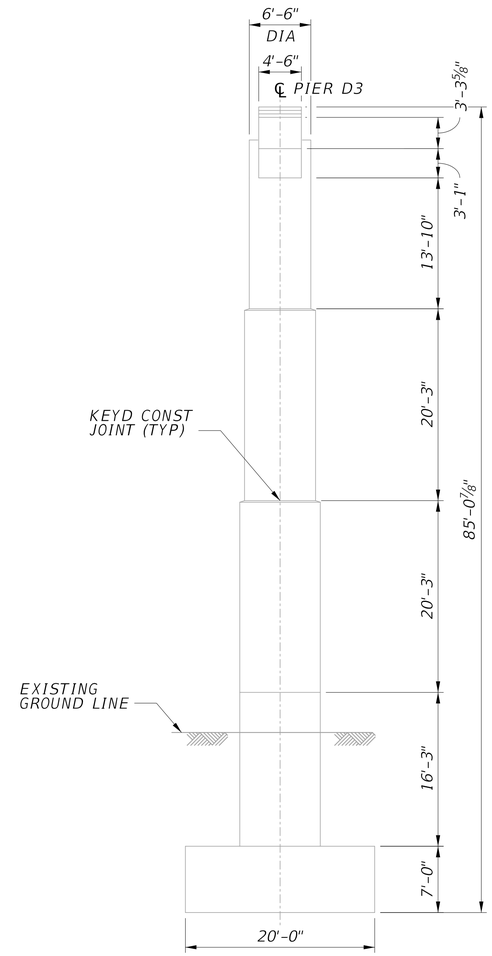

PIER D3 END VIEW

(EAST FACE)

2 0 4 8 ft.

⅛" = 1'-0"

SUMMARY OF CONCRETE REPAIR QUANTITIES

ID	UNIT	ESTIMATED QUANTITY	REPAIR
1	SF	4	C1
2	SF	2	C1
3	SF	12	C1
4	SF	3	C1
5	SF	7	C1
6	SF	4	C1
TOTAL C1 (DOCUMENTED)		32	
TOTAL C1 (ADJUSTED)		48	
7	LF	1	C2
8	LF	1	C2
TOTAL C2 (DOCUMENTED)		2	
TOTAL C2 (ADJUSTED)		3	

C1 QUANTITY INCLUDES BOTH C1B AND C1C REPAIRS.

LEGEND:

- CONCRETE REMOVAL
- CONCRETE REPAIR
- (#) REPAIR ID NUMBER
- EPOXY INJECTION CRACK REPAIR

NOTES:

1. FOR GENERAL NOTES, SEE SHEETS XX THRU XX.
2. FOR PIER BEARING PEDESTAL DETAILS, SEE SHEETS XX THRU XX.
3. ELEVATIONS SHOWN ARE FROM ORIGINAL CONSTRUCTION PLANS STATIONS CONVERTED TO NAVD 88 DATUM, AND ARE GIVEN AT ℄ PIER.

NO.	REVISION	DATE	BY

WEST VIRGINIA DEPARTMENT OF TRANSPORTATION
DIVISION OF HIGHWAYS
ENGINEERING DIVISION

I-64 OVER KANAWHA RIVER
EUGENE A. CARTER MEMORIAL BRIDGE +3
SUBSTRUCTURE REPAIR
PIER D3 (1 OF 2)

DESIGNED	DATE
LJG	08/25
DRAWN	
AFMO	08/25
CHECKED	
REVIEWED	

HDR ENGINEERING INC.
CONSULTING ENGINEERS
CHARLESTON, WV
681-341-6100

SHEET OF

BRIDGE NO. 2563.6

$DD-MMM-YYYY HH:MM$ pw://pwhdruseas02.intranet.hdr:HDR_US_East_02/Documents/WV_DOT/WVDOT-Eugene_Carter_Bridge_3/6.0_CAD_BIM/6.2_WIP/HDR/6.2.2_Sheet_Files/23_Structure/2.165 Substructure Repair Pier D3 (1 of 2).dgn SNOLEN

PROJECT NUMBERS		DISTRICT	COUNTY	SHEET NO.	TOTAL
STATE	FEDERAL				
S320-64-57.44 00	NHPP-0064 (497)D	1	KANAWHA		

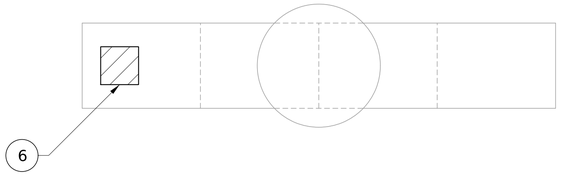

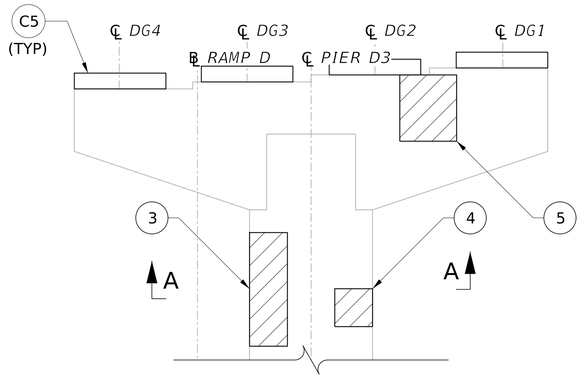

SECTION A-A

2 0 2 4 ft.
¼" = 1'-0"

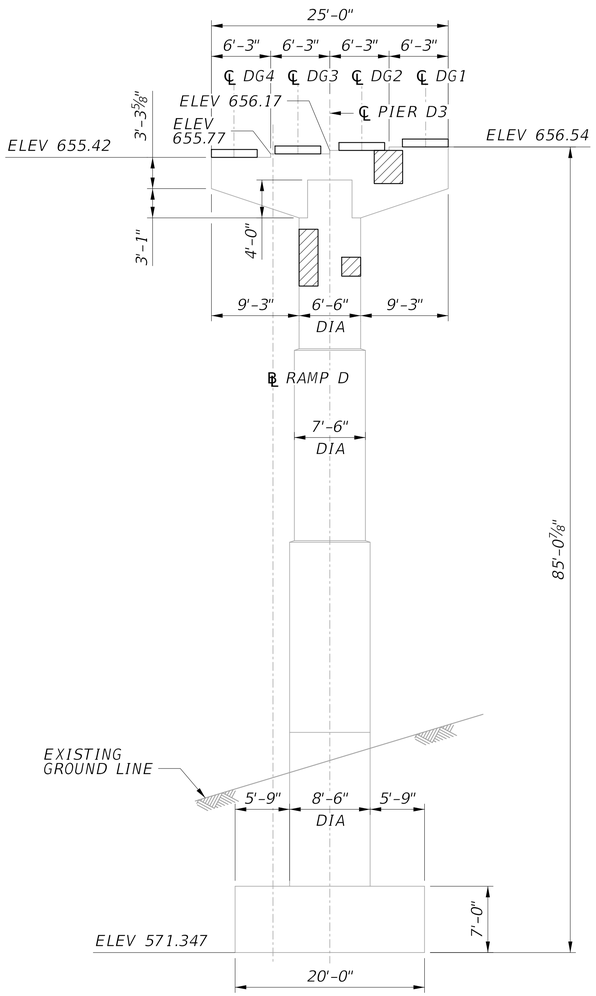

PIER D3 ELEVATION

(LOOKING STATION BACK)

PIER D3 CAP ELEVATION

(LOOKING STATION BACK)

2 0 2 4 ft.
¼" = 1'-0"

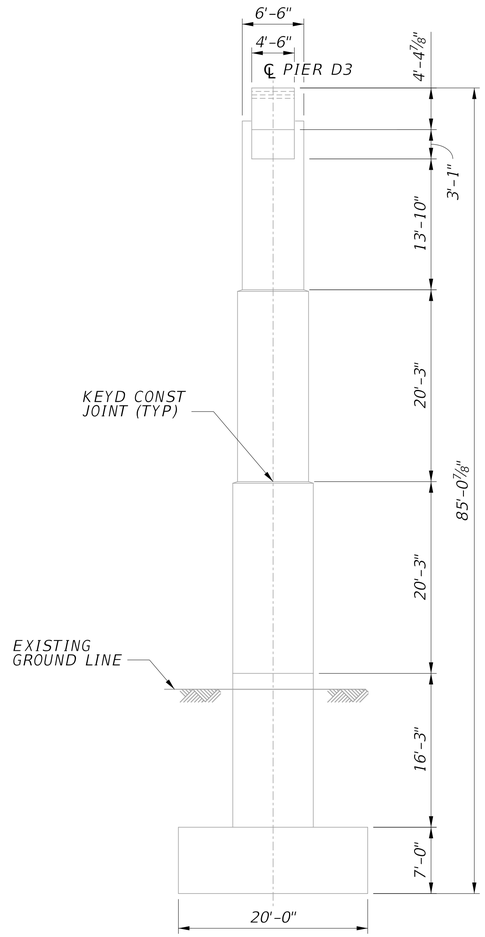

PIER D3 END VIEW

(NORTH FACE)

LEGEND:

- CONCRETE REMOVAL
- CONCRETE REPAIR
- (#) REPAIR ID NUMBER
- EPOXY INJECTION CRACK REPAIR

2 0 4 8 ft.
⅛" = 1'-0"

NO.	REVISION	DATE	BY

WEST VIRGINIA DEPARTMENT OF TRANSPORTATION
DIVISION OF HIGHWAYS
ENGINEERING DIVISION

I-64 OVER KANAWHA RIVER
EUGENE A. CARTER MEMORIAL BRIDGE +3

SUBSTRUCTURE REPAIR
PIER D3 (2 OF 2)

DESIGNED	DATE
LJG	08/25
DRAWN	
AFMO	08/25
CHECKED	
REVIEWED	

HDR ENGINEERING INC.
CONSULTING ENGINEERS
CHARLESTON, WV
681-341-6100

SHEET OF
BRIDGE NO. 2563.6

SNOLEN $DD-MMM-YYYY HH:MM$ pw://pwhdruseas02.intranet.hdr:HDR_US_East_02/Documents/WV_DOT/WVDOT-Eugene_Carter_Bridge_3/6.0_CAD_BIM/6.2_WIP/HDR/6.2.2_Sheet_Files/23_Structure/2.166 Substructure Repair Pier D3 (2 of 2).dgn

PROJECT NUMBERS		DISTRICT	COUNTY	SHEET NO.	TOTAL
STATE	FEDERAL				
S320-64-57.44 00	NHPP-0064 (497)D	1	KANAWHA		

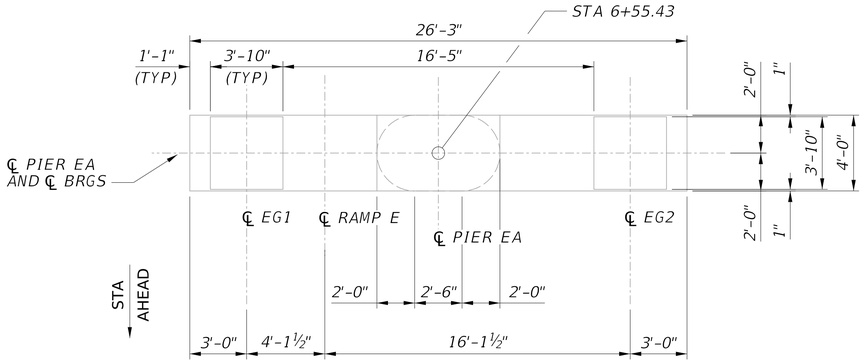

PIER EA PLAN

(LOOKING STATION AHEAD)

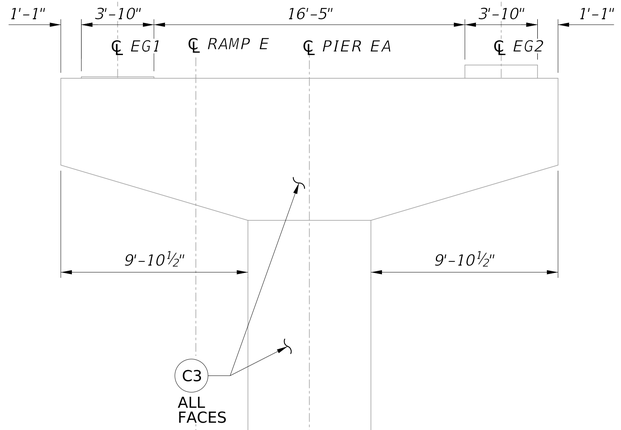

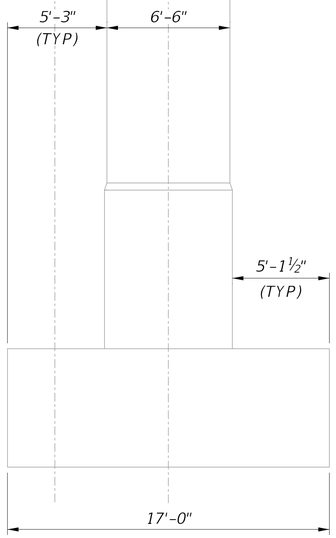

PIER EA ELEVATION

(LOOKING STATION AHEAD)

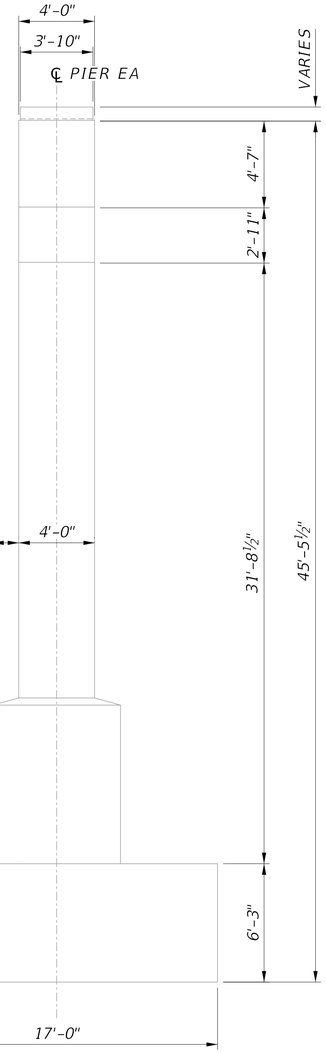

PIER EA END VIEW

(SOUTH FACE)

2 0 2 4 ft.

¼" = 1'-0"

LEGEND:

- CONCRETE REMOVAL
- CONCRETE REPAIR
- (#) REPAIR ID NUMBER

** DOWNSPOUTING ON THIS PIER TO BE REPLACED

NOTES:

1. FOR GENERAL NOTES, SEE SHEETS XX THRU XX.
2. ELEVATIONS SHOWN ARE FROM ORIGINAL CONSTRUCTION PLANS STATIONS CONVERTED TO NAVD 88 DATUM, AND ARE GIVEN AT ℄ PIER.

NO.	REVISION	DATE	BY

WEST VIRGINIA DEPARTMENT OF TRANSPORTATION
DIVISION OF HIGHWAYS
ENGINEERING DIVISION

I-64 OVER KANAWHA RIVER
EUGENE A. CARTER MEMORIAL BRIDGE +3

SUBSTRUCTURE REPAIR
PIER EA (1 OF 2)

DESIGNED	LJG
DATE	08/25
DRAWN	AFMO
DATE	08/25
CHECKED	
REVIEWED	

HDR ENGINEERING INC.
CONSULTING ENGINEERS
CHARLESTON, WV
681-341-6100

SHEET OF

BRIDGE NO. 2563.6

SNOLEN $DD-MMM-YYYY HH:MM$ pw://pwhdruseas02.intranet.hdr:HDR_US_East_02/Documents/WV_DOT/WVDOT-Eugene_Carter_Bridge_3/6.0_CAD_BIM/6.2_WIP/HDR/6.2.2_Sheet_Files/23_Structure/2.170 Substructure Repair Pier EA (1 of 2).dgn

PROJECT NUMBERS		DISTRICT	COUNTY	SHEET NO.	TOTAL
STATE	FEDERAL				
S320-64-57.44 00	NHPP-0064 (497)D	1	KANAWHA		

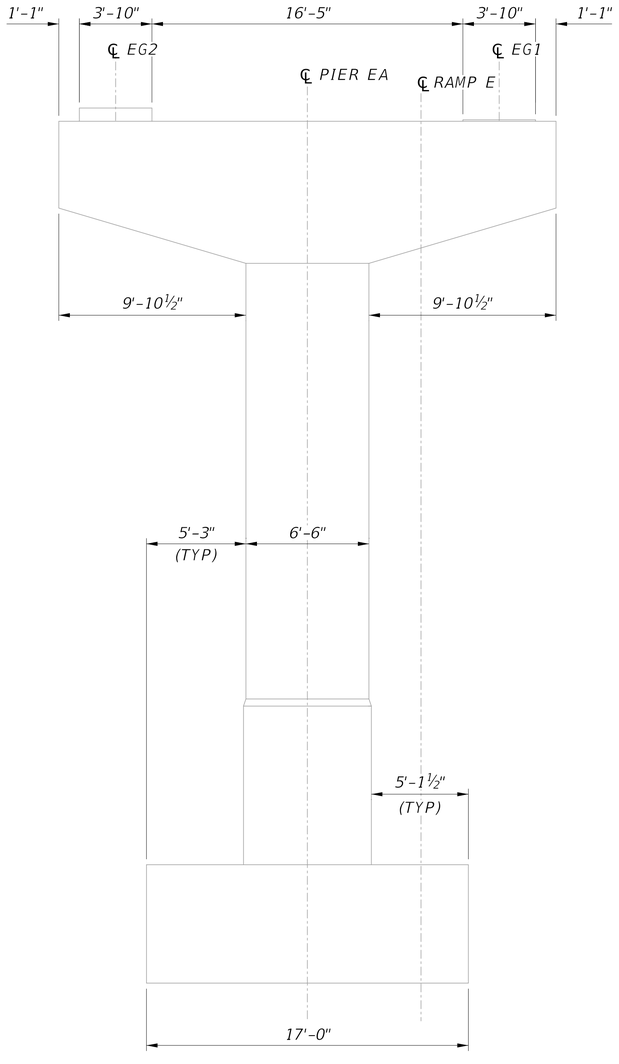

PIER EA ELEVATION

(LOOKING STATION AHEAD)

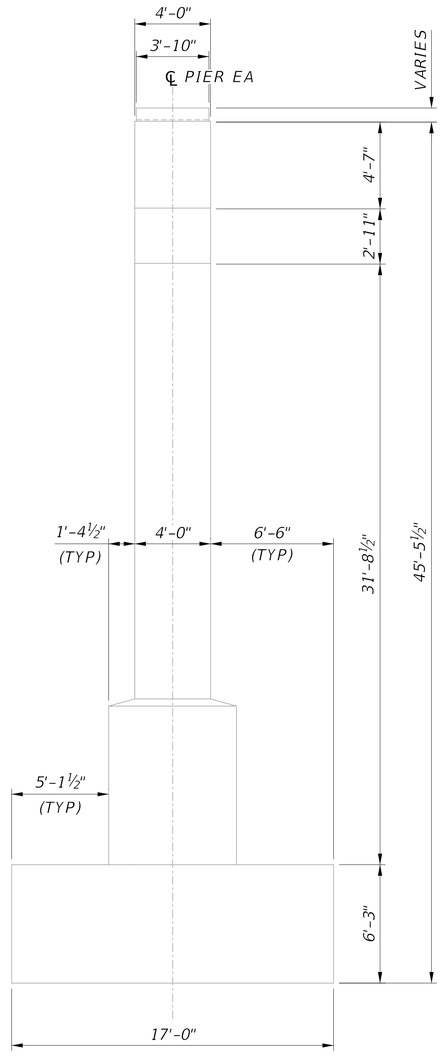

PIER EA END VIEW

(SOUTH FACE)

LEGEND:

- CONCRETE REMOVAL
- CONCRETE REPAIR
- (#) REPAIR ID NUMBER

2 0 2 4 ft.

¼" = 1'-0"

NO.	REVISION	DATE	BY

WEST VIRGINIA DEPARTMENT OF TRANSPORTATION
DIVISION OF HIGHWAYS
ENGINEERING DIVISION

I-64 OVER KANAWHA RIVER
EUGENE A. CARTER MEMORIAL BRIDGE +3

SUBSTRUCTURE REPAIR
PIER EA (2 OF 2)

DESIGNED	DATE
LJG	08/25
DRAWN	
AFMO	08/25
CHECKED	
REVIEWED	

HDR ENGINEERING INC.
CONSULTING ENGINEERS
CHARLESTON, WV
681-341-6100

SHEET OF

BRIDGE NO. 2563.6

SNOLEN $DD-MMM-YYYY HH:MM$ pw://pwhdruseas02.intranet.hdr:HDR_US_East_02/Documents/WV_DOT/WVDOT-Eugene_Carter_Bridge_3/6.0_CAD_BIM/6.2_WIP/HDR/6.2.2_Sheet_Files/23_Structure/2.171 Substructure Repair Pier EA (2 of 2).dgn

PROJECT NUMBERS		DISTRICT	COUNTY	SHEET NO.	TOTAL
STATE	FEDERAL				
S320-64-57.44 00	NHPP-0064 (497)D	1	KANAWHA		

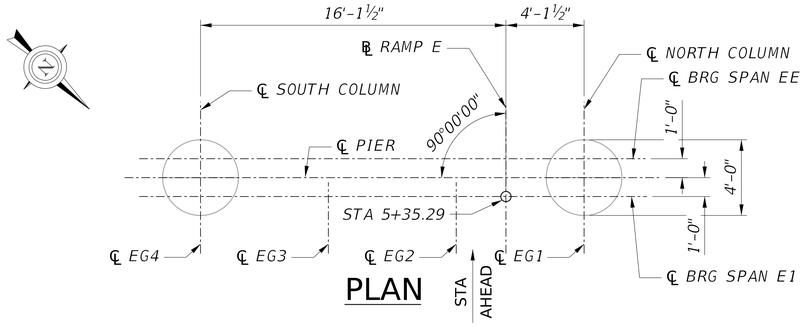

PLAN

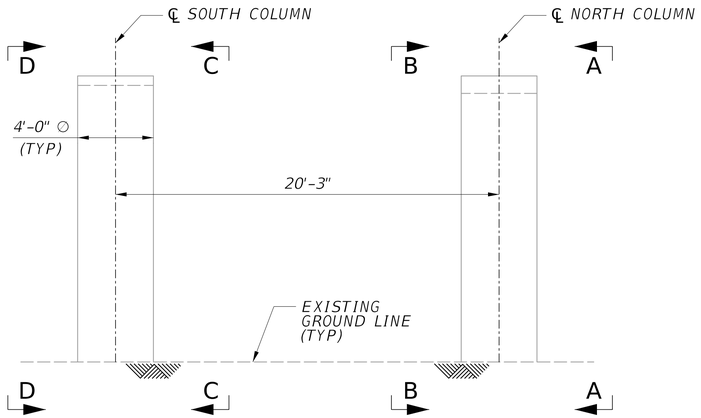

ELEVATION
(LOOKING AHEAD STATION)

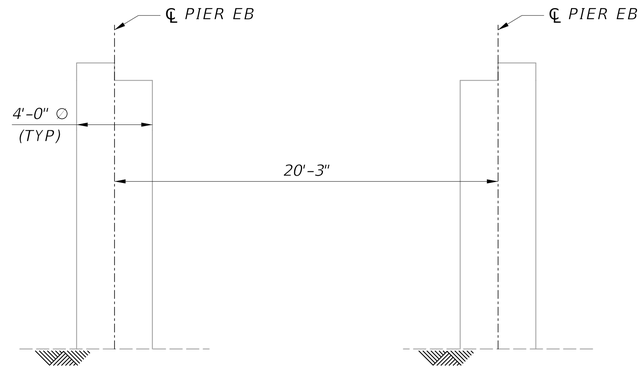

VIEW A-A

VIEW B-B

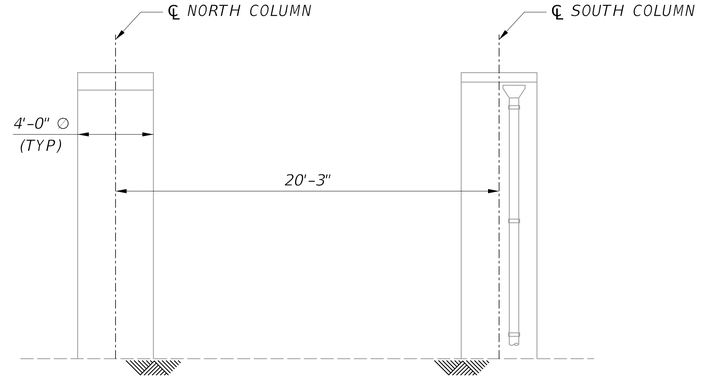

ELEVATION
(LOOKING BACK STATION)

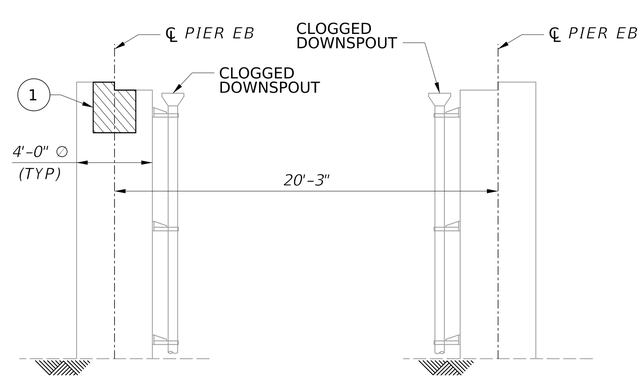

VIEW C-C

VIEW D-D

2 0 2 4 ft.
¼" = 1'-0"

SUMMARY OF CONCRETE REPAIR QUANTITIES			
ID	UNIT	ESTIMATED QUANTITY	REPAIR
1	SF	6.0	C1
TOTAL C1 (DOCUMENTED)		6.0	
TOTAL C1 (ADJUSTED)		7.8	
TOTAL C2 (DOCUMENTED)		0	
TOTAL C2 (ADJUSTED)		0	

C1 QUANTITY INCLUDES BOTH C1B AND C1C REPAIRS.

LEGEND:

- CONCRETE REMOVAL
- CONCRETE REPAIR
- (#) REPAIR ID NUMBER
- EPOXY INJECTION CRACK REPAIR

NOTES:

1. FOR GENERAL NOTES, SEE SHEETS XX AND XX.
2. FOR ADDITIONAL DIMENSIONS AND DETAILS, SEE EXISTING BRIDGE PLANS.
3. ADJUSTED REPAIR QUANTITIES TOTALS INCLUDE 30% CONTINGENCY FOR CONCRETE REPAIR DETAILS, SEE SHEETS XX THRU XX.

NO.	REVISION	DATE	BY

WEST VIRGINIA DEPARTMENT OF TRANSPORTATION
DIVISION OF HIGHWAYS
ENGINEERING DIVISION

I-64 OVER KANAWHA RIVER
EUGENE A. CARTER MEMORIAL BRIDGE +3
SUBSTRUCTURE REPAIR
PIER EB

DESIGNED	DATE
MAB	12/25
DRAWN	
DJC	12/25
CHECKED	
REVIEWED	

Mead & Hunt

MEAD & HUNT INC.
CONSULTING ENGINEERS
CHARLESTON, WV
304-345-6712

SHEET OF

BRIDGE NO. 2563.6

1420djc $DD-MMM-YYYY HH:MM$ X:\324160025191 1.01\TECH\Structures\Ramp E\Sheets\str_plr_001_Ramp E_Eugene Carter Memorial Bridge.dgn

PROJECT NUMBERS		DISTRICT	COUNTY	SHEET NO.	TOTAL
STATE	FEDERAL				
S320-64-57.44 00	NHPP-0064 (497)D	1	KANAWHA		

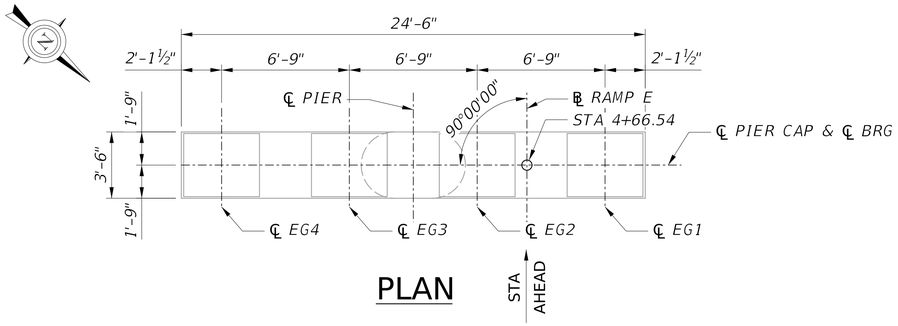

PLAN

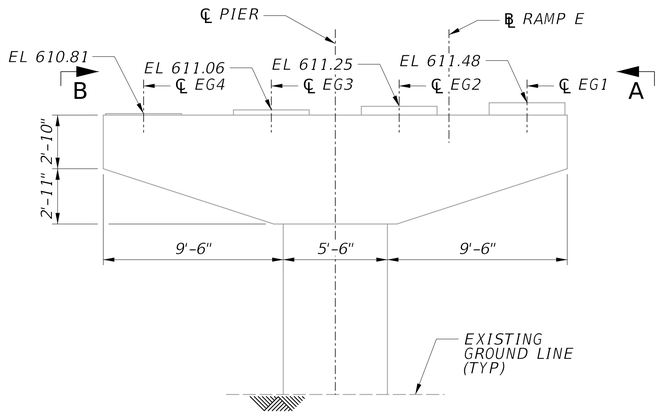

B

ELEVATION
(LOOKING AHEAD STATION)

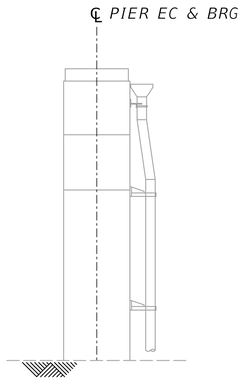

A

VIEW A-A

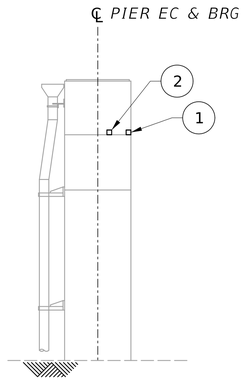

VIEW B-B

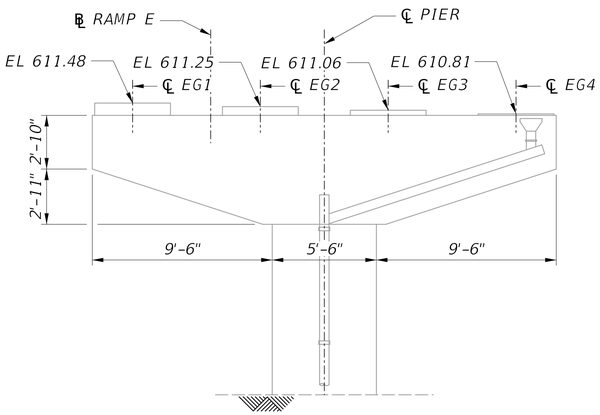

ELEVATION
(LOOKING BACK STATION)

SUMMARY OF CONCRETE REPAIR QUANTITIES			
ID	UNIT	ESTIMATED QUANTITY	REPAIR
TOTAL C1 (DOCUMENTED)		0.2	
TOTAL C1 (ADJUSTED)		0.3	
TOTAL C2 (DOCUMENTED)		0	
TOTAL C2 (ADJUSTED)		0	

C1 QUANTITY INCLUDES BOTH C1B AND C1C REPAIRS.

LEGEND:

- CONCRETE REMOVAL
- CONCRETE REPAIR
- (#) REPAIR ID NUMBER
- EPOXY INJECTION CRACK REPAIR

NOTES:

1. FOR GENERAL NOTES, SEE SHEETS XX AND XX.
2. FOR ADDITIONAL DIMENSIONS AND DETAILS, SEE EXISTING BRIDGE PLANS.
3. ADJUSTED REPAIR QUANTITIES TOTALS INCLUDE 30% CONTINGENCY FOR CONCRETE REPAIR DETAILS, SEE SHEETS XX THRU XX.

2 0 2 4 ft.
¼" = 1'-0"

NO.	REVISION	DATE	BY

WEST VIRGINIA DEPARTMENT OF TRANSPORTATION
DIVISION OF HIGHWAYS
ENGINEERING DIVISION

I-64 OVER KANAWHA RIVER
EUGENE A. CARTER MEMORIAL BRIDGE +3
SUBSTRUCTURE REPAIR
PIER EC

DESIGNED	DATE
MAB	12/25
DRAWN	
DJC	12/25
CHECKED	
REVIEWED	

Mead & Hunt

MEAD & HUNT INC.
CONSULTING ENGINEERS
CHARLESTON, WV
304-345-6712

SHEET OF
BRIDGE NO. 2563.6

1420djc $DD-MMM-YYYY HH:MM$ X:\324160025191 1.01\TECH\Structures\Ramp Elsheets\str_plr_002_Ramp E_Eugene Carter Memorial Bridge.dgn

PROJECT NUMBERS		DISTRICT	COUNTY	SHEET NO.	TOTAL
STATE	FEDERAL				
S320-64-57.44 00	NHPP-0064 (497)D	1	KANAWHA		

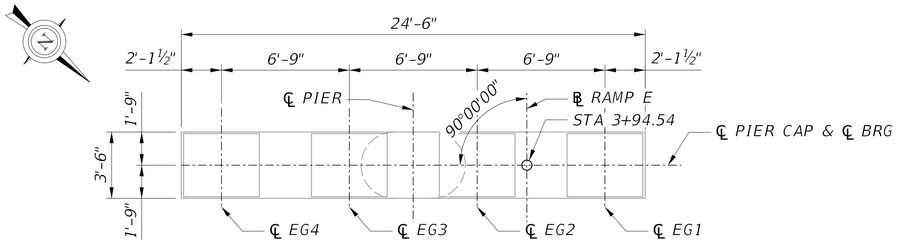

PLAN

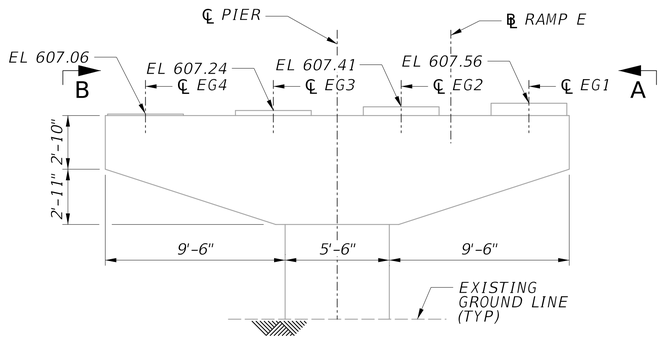

ELEVATION
(LOOKING AHEAD STATION)

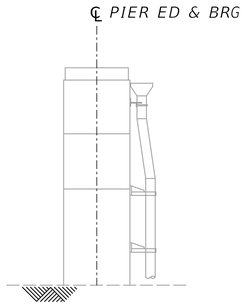

VIEW A-A

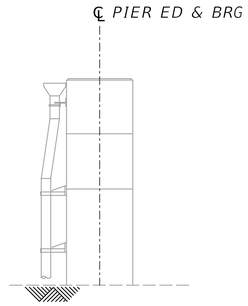

VIEW B-B

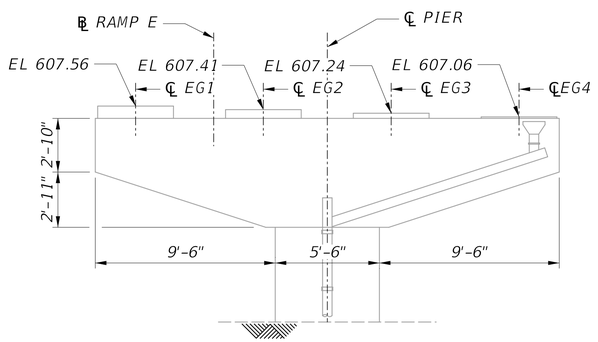

ELEVATION
(LOOKING BACK STATION)

SUMMARY OF CONCRETE REPAIR QUANTITIES			
ID	UNIT	ESTIMATED QUANTITY	REPAIR
TOTAL C1 (DOCUMENTED)		0	
TOTAL C1 (ADJUSTED)		0	
TOTAL C2 (DOCUMENTED)		0	
TOTAL C2 (ADJUSTED)		0	

C1 QUANTITY INCLUDES BOTH C1B AND C1C REPAIRS.

LEGEND:

- CONCRETE REMOVAL
- CONCRETE REPAIR
- (#) REPAIR ID NUMBER
- EPOXY INJECTION CRACK REPAIR

NOTES:

1. FOR GENERAL NOTES, SEE SHEETS XX AND XX.
2. FOR ADDITIONAL DIMENSIONS AND DETAILS, SEE EXISTING BRIDGE PLANS.
3. ADJUSTED REPAIR QUANTITIES TOTALS INCLUDE 30% CONTINGENCY FOR CONCRETE REPAIR DETAILS, SEE SHEETS XX THRU XX.

NO.	REVISION	DATE	BY

WEST VIRGINIA DEPARTMENT OF TRANSPORTATION
DIVISION OF HIGHWAYS
ENGINEERING DIVISION

I-64 OVER KANAWHA RIVER
EUGENE A. CARTER MEMORIAL BRIDGE +3
SUBSTRUCTURE REPAIR
PIER ED

2 0 2 4 ft.
¼" = 1'-0"

DESIGNED	MAB	DATE	12/25
DRAWN	DJC		12/25
CHECKED			
REVIEWED			

Mead & Hunt

MEAD & HUNT INC.
CONSULTING ENGINEERS
CHARLESTON, WV
304-345-6712

SHEET OF
BRIDGE NO. 2563.6

1420djc $DD-MMM-YYYY HH:MM$ X:\3241600\251911.01\TECH\Structures\Ramp E\sheets\str_pir_003_Ramp E_Eugene Carter Memorial Bridge.dgn

PROJECT NUMBERS		DISTRICT	COUNTY	SHEET NO.	TOTAL
STATE	FEDERAL				
S320-64-57.44 00	NHPP-0064 (497)D	1	KANAWHA		

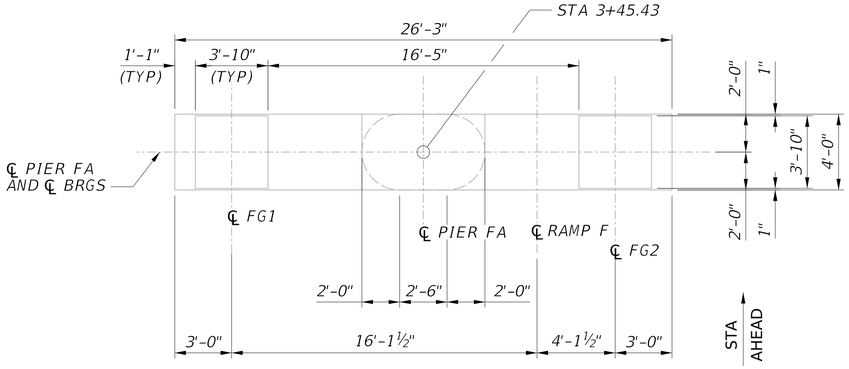

PIER FA PLAN

(LOOKING STATION AHEAD)

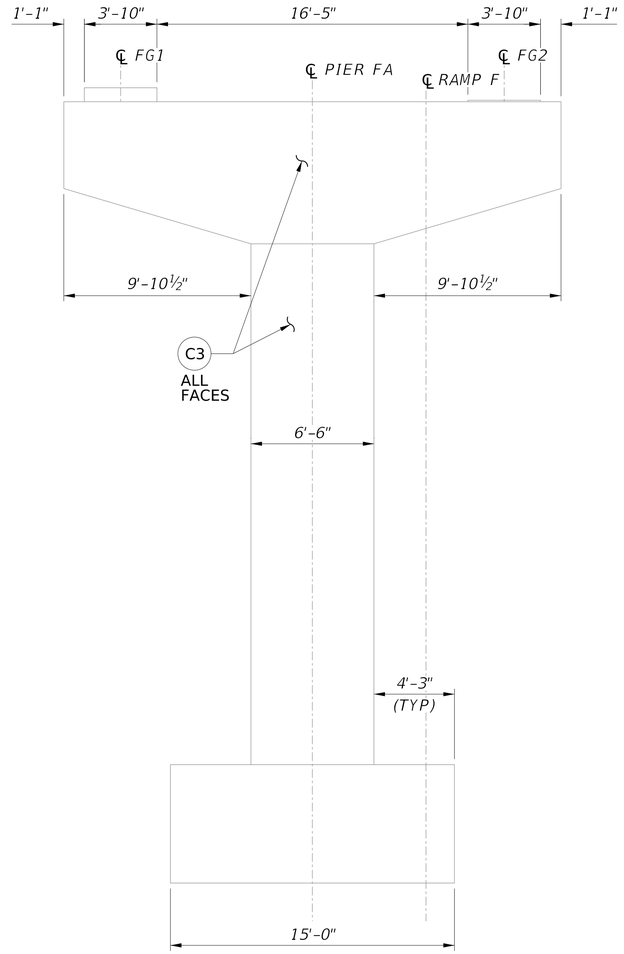

PIER FA ELEVATION

(LOOKING STATION AHEAD)

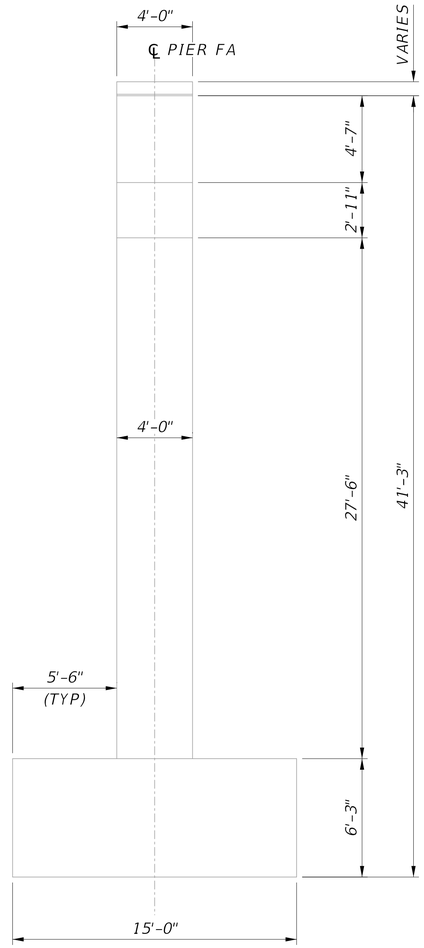

PIER FA END VIEW

(SOUTH FACE)

2 0 2 4 ft.

¼" = 1'-0"

LEGEND:

- CONCRETE REMOVAL
- CONCRETE REPAIR
- (#) REPAIR ID NUMBER

** DOWNSPOUTING ON THIS PIER TO BE REPLACED

NOTES:

1. FOR GENERAL NOTES, SEE SHEETS XX THRU XX.
2. ELEVATIONS SHOWN ARE FROM ORIGINAL CONSTRUCTION PLANS STATIONS CONVERTED TO NAVD 88 DATUM, AND ARE GIVEN AT ℄ PIER.

NO.	REVISION	DATE	BY

WEST VIRGINIA DEPARTMENT OF TRANSPORTATION
DIVISION OF HIGHWAYS
ENGINEERING DIVISION

I-64 OVER KANAWHA RIVER
EUGENE A. CARTER MEMORIAL BRIDGE +3

SUBSTRUCTURE REPAIR PIER FA (1 OF 2)

DESIGNED	LJG
DATE	08/25
DRAWN	AFMO
DATE	08/25
CHECKED	
DATE	
REVIEWED	
DATE	

HDR ENGINEERING INC.
CONSULTING ENGINEERS
CHARLESTON, WV
681-341-6100

SHEET OF

BRIDGE NO. 2563.6

SNOLEN $DD-MMM-YYYY HH:MM$ pw://pwhdruseas02.intranet.hdr:HDR_US_East_02/Documents/WV_DOT/WVDOT-Eugene_Carter_Bridge_3/6.0_CAD_BIM/6.2_WIP/HDR/6.2.2_Sheet_Files/23_Structure/2.175 Substructure Repair Pier FA (1 of 2).dgn

PROJECT NUMBERS		DISTRICT	COUNTY	SHEET NO.	TOTAL
STATE	FEDERAL				
S320-64-57.44 00	NHPP-0064 (497)D	1	KANAWHA		

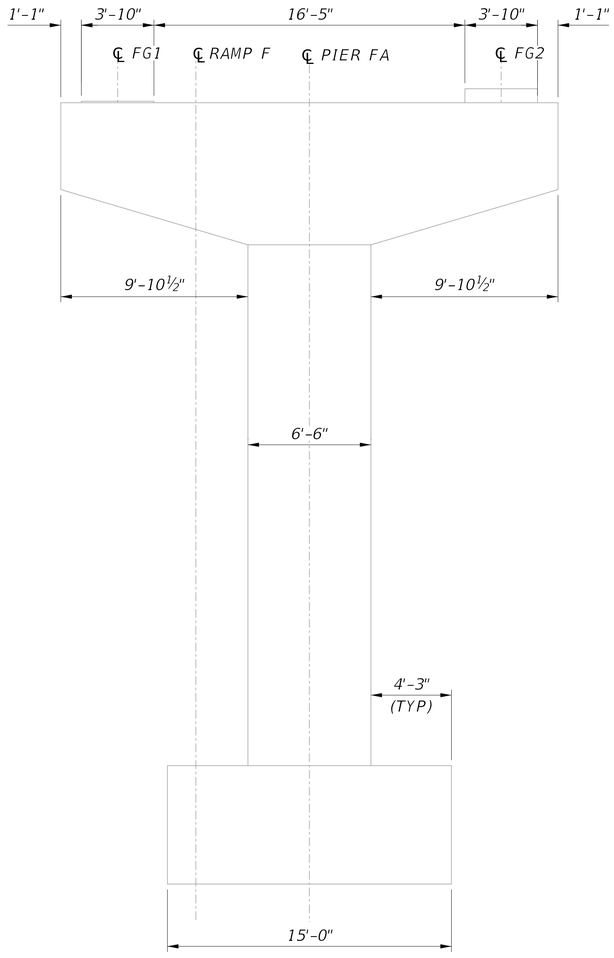

PIER FA ELEVATION

(LOOKING STATION BACK)

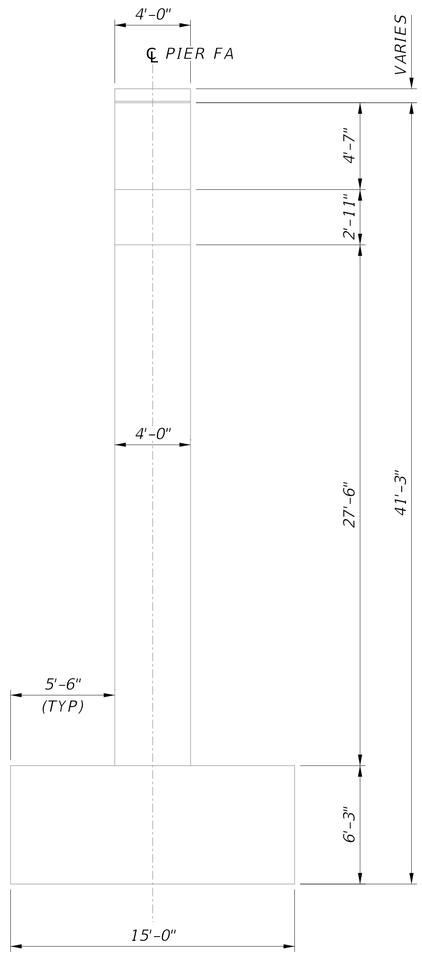

PIER FA END VIEW

(NORTH FACE)

LEGEND:

- CONCRETE REMOVAL
- CONCRETE REPAIR
- (#) REPAIR ID NUMBER

2 0 2 4 ft.

¼" = 1'-0"

NO.	REVISION	DATE	BY

WEST VIRGINIA DEPARTMENT OF TRANSPORTATION
DIVISION OF HIGHWAYS
ENGINEERING DIVISION

I-64 OVER KANAWHA RIVER
EUGENE A. CARTER MEMORIAL BRIDGE +3

SUBSTRUCTURE REPAIR
PIER FA (2 OF 2)

DESIGNED	LJG	DATE	08/25
DRAWN	AFMO		08/25
CHECKED			
REVIEWED			

HDR ENGINEERING INC.
CONSULTING ENGINEERS

CHARLESTON, WV
681-341-6100

SHEET OF

BRIDGE NO. 2563.6

SNOLEN $DD-MMM-YYYY HH:MM$ pw://pwhdruseas02.intranet.hdr:HDR_US_East_02/Documents/WV_DOT/WVDOT-Eugene_Carter_Bridge_3/6.0_CAD_BIM/6.2_WIP/HDR/6.2.2_Sheet_Files/23_Structure/2.176 Substructure Repair Pier FA (2 of 2).dgn

PROJECT NUMBERS		DISTRICT	COUNTY	SHEET NO.	TOTAL
STATE	FEDERAL				
S320-64-57.44 00	NHPP-0064 (497)D	1	KANAWHA		

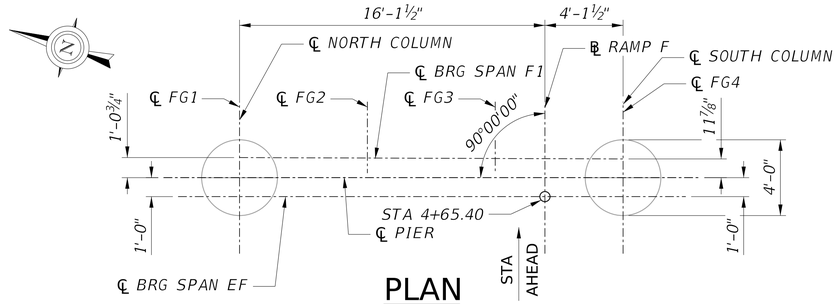

PLAN

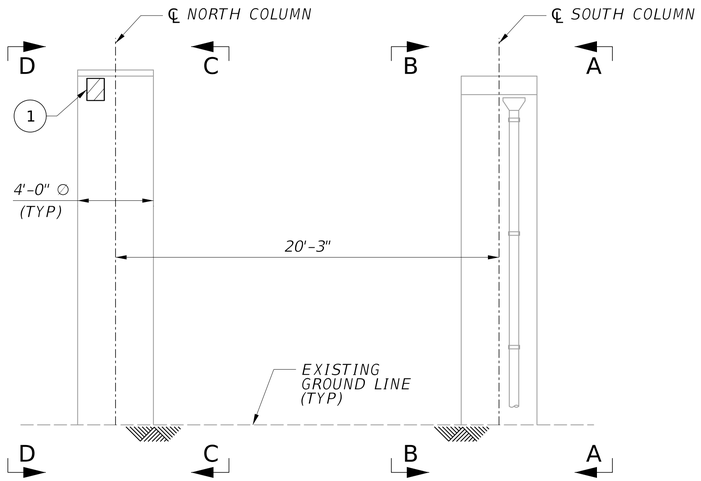

ELEVATION
(LOOKING AHEAD STATION)

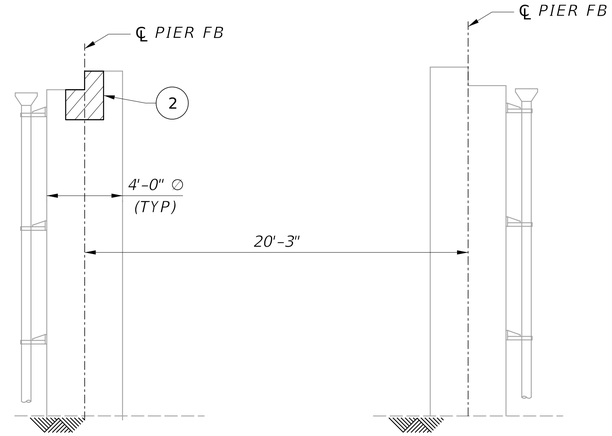

VIEW A-A

VIEW B-B

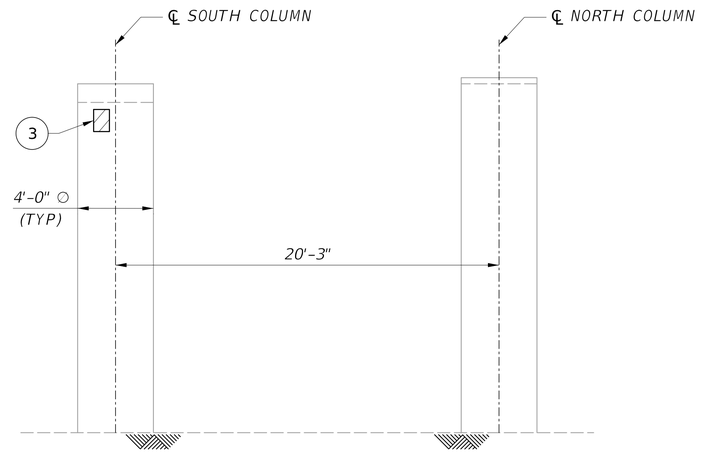

ELEVATION
(LOOKING BACK STATION)

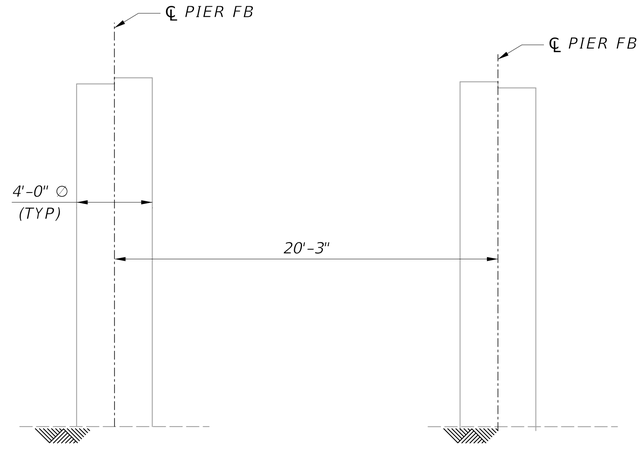

VIEW C-C

VIEW D-D

SUMMARY OF CONCRETE REPAIR QUANTITIES			
ID	UNIT	ESTIMATED QUANTITY	REPAIR
1	SF	1.0	C1
2	SF	9.0	C1
3	SF	1.0	C1
TOTAL C1 (DOCUMENTED)		11.0	
TOTAL C1 (ADJUSTED)		14.3	
TOTAL C2 (DOCUMENTED)		0	
TOTAL C2 (ADJUSTED)		0	

C1 QUANTITY INCLUDES BOTH C1B AND C1C REPAIRS.

LEGEND:

- CONCRETE REMOVAL
- CONCRETE REPAIR
- (#) REPAIR ID NUMBER
- EPOXY INJECTION CRACK REPAIR

NOTES:

1. FOR GENERAL NOTES, SEE SHEETS XX AND XX.
2. FOR ADDITIONAL DIMENSIONS AND DETAILS, SEE EXISTING BRIDGE PLANS.
3. ADJUSTED REPAIR QUANTITIES TOTALS INCLUDE 30% CONTINGENCY FOR CONCRETE REPAIR DETAILS, SEE SHEETS XX THRU XX.

2 0 2 4 ft.
¼" = 1'-0"

NO.	REVISION	DATE	BY

WEST VIRGINIA DEPARTMENT OF TRANSPORTATION
DIVISION OF HIGHWAYS
ENGINEERING DIVISION

I-64 OVER KANAWHA RIVER
EUGENE A. CARTER MEMORIAL BRIDGE +3
SUBSTRUCTURE REPAIR
PIER FB

DESIGNED	DATE
MAB	12/25
DRAWN	
DJC	12/25
CHECKED	
REVIEWED	

Mead & Hunt

MEAD & HUNT INC.
CONSULTING ENGINEERS
CHARLESTON, WV
304-345-6712

SHEET OF
BRIDGE NO. 2563.6

1420djc $DD-MMM-YYYY HH:MM$ X:\32416000\251911.01\TECH\Structures\Ramp F\sheets\str_plr_001_Ramp F_Eugene Carter Memorial Bridge.dgn

PROJECT NUMBERS		DISTRICT	COUNTY	SHEET NO.	TOTAL
STATE	FEDERAL				
S320-64-57.44 00	NHPP-0064 (497)D	1	KANAWHA		

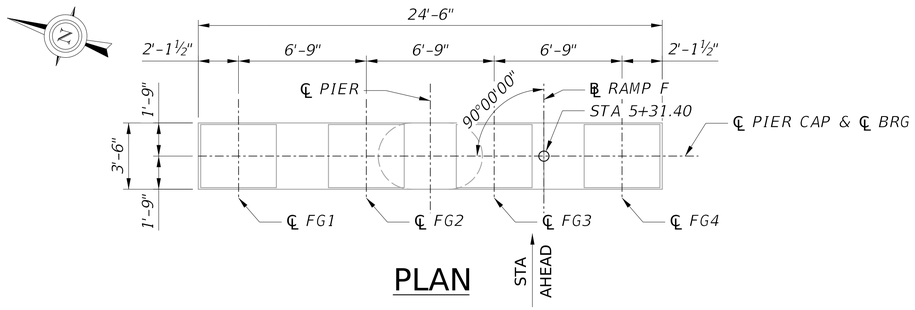

PLAN

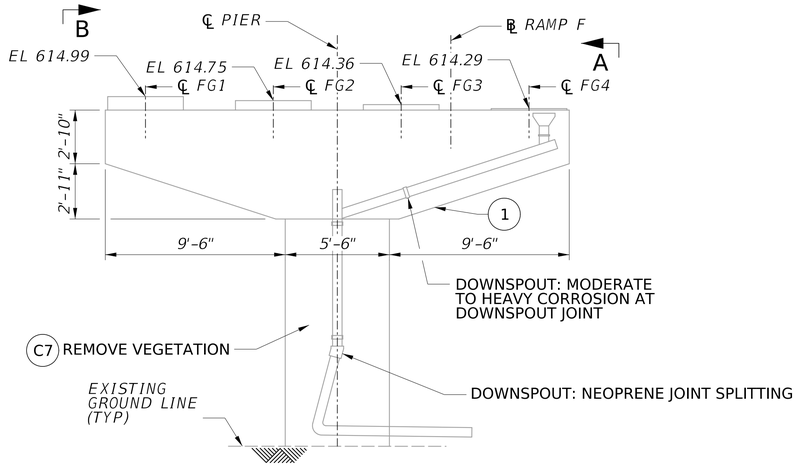

ELEVATION
(LOOKING AHEAD STATION)

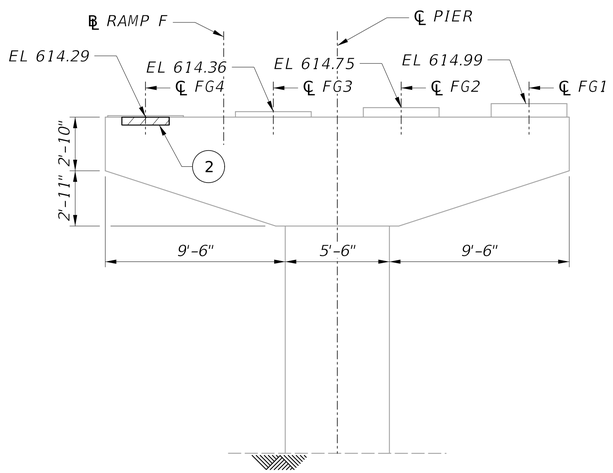

ELEVATION
(LOOKING BACK STATION)

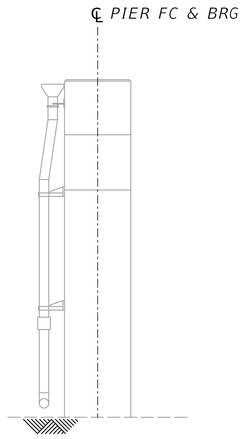

VIEW A-A

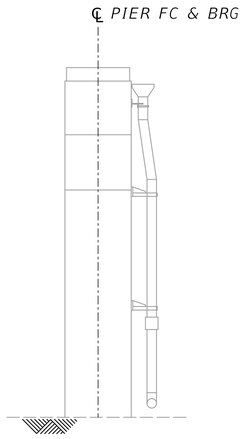

VIEW B-B

SUMMARY OF CONCRETE REPAIR QUANTITIES			
ID	UNIT	ESTIMATED QUANTITY	REPAIR
1	SF	0.1	C1
2	SF	2.0	C1
TOTAL C1 (DOCUMENTED)		2.1	
TOTAL C1 (ADJUSTED)		2.7	
TOTAL C2 (DOCUMENTED)		0	
TOTAL C2 (ADJUSTED)		0	

C1 QUANTITY INCLUDES BOTH C1B AND C1C REPAIRS.

LEGEND:

- CONCRETE REMOVAL
- CONCRETE REPAIR
- (#) REPAIR ID NUMBER
- EPOXY INJECTION CRACK REPAIR

NOTES:

1. FOR GENERAL NOTES, SEE SHEETS XX AND XX.
2. FOR ADDITIONAL DIMENSIONS AND DETAILS, SEE EXISTING BRIDGE PLANS.
3. ADJUSTED REPAIR QUANTITIES TOTALS INCLUDE 30% CONTINGENCY FOR CONCRETE REPAIR DETAILS, SEE SHEETS XX THRU XX.

2 0 2 4 ft.
¼" = 1'-0"

NO.	REVISION	DATE	BY

WEST VIRGINIA DEPARTMENT OF TRANSPORTATION
DIVISION OF HIGHWAYS
ENGINEERING DIVISION

I-64 OVER KANAWHA RIVER
EUGENE A. CARTER MEMORIAL BRIDGE +3
SUBSTRUCTURE REPAIR
PIER FC

DESIGNED	MAB	DATE	12/25
DRAWN	DJC		12/25
CHECKED			
REVIEWED			

Mead & Hunt

MEAD & HUNT INC.
CONSULTING ENGINEERS
CHARLESTON, WV
304-345-6712

SHEET OF
BRIDGE NO. 2563.6

1420djc $DD-MMM-YYYY HH:MM$ X:\32416\00\251911.01\TECH\Structures\Ramp F\sheets\str_pir_002_Ramp F_Eugene Carter Memorial Bridge.dgn

PROJECT NUMBERS		DISTRICT	COUNTY	SHEET NO.	TOTAL
STATE	FEDERAL				
S320-64-57.44 00	NHPP-0064 (497)D	1	KANAWHA		

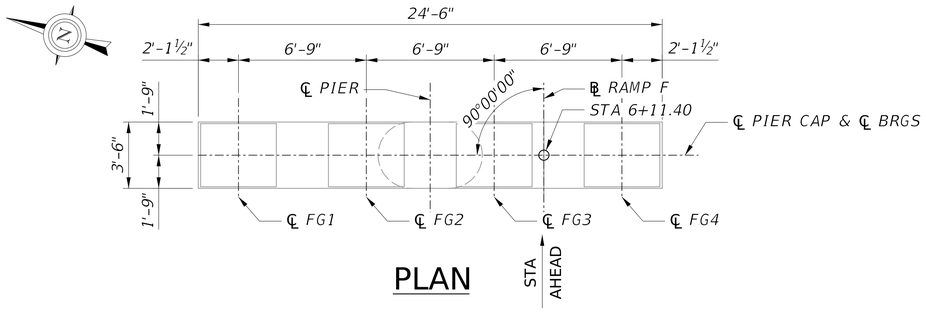

PLAN

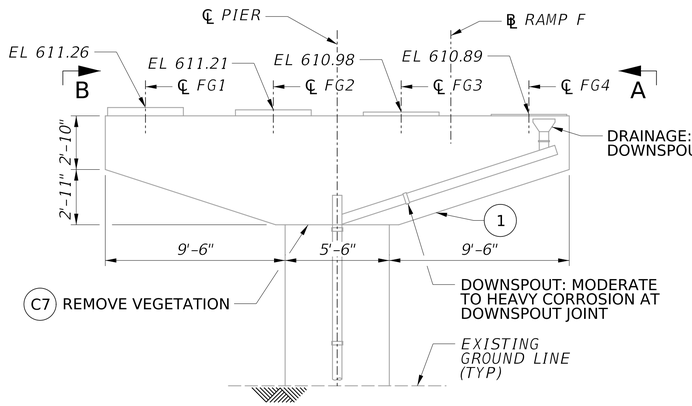

ELEVATION
(LOOKING AHEAD STATION)

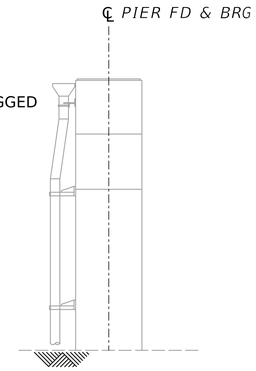

VIEW A-A

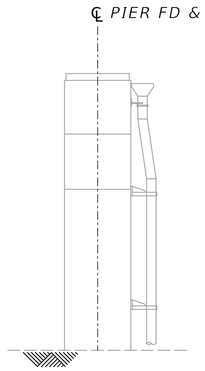

VIEW B-B

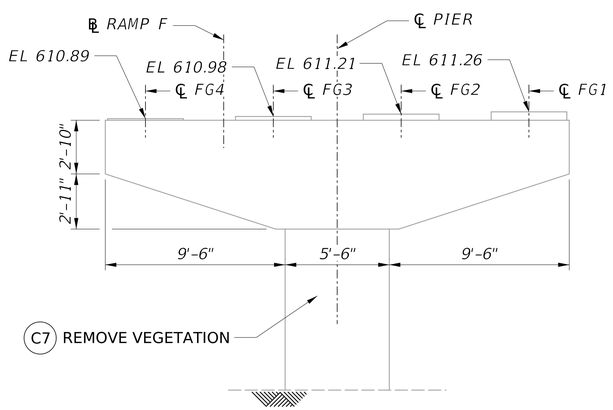

ELEVATION
(LOOKING BACK STATION)

SUMMARY OF CONCRETE REPAIR QUANTITIES			
ID	UNIT	ESTIMATED QUANTITY	REPAIR
1	SF	0.1	C1
TOTAL C1 (DOCUMENTED)		0.1	
TOTAL C1 (ADJUSTED)		0.1	
TOTAL C2 (DOCUMENTED)		0	
TOTAL C2 (ADJUSTED)		0	

C1 QUANTITY INCLUDES BOTH C1B AND C1C REPAIRS.

LEGEND:

- CONCRETE REMOVAL
- CONCRETE REPAIR
- (#) REPAIR ID NUMBER
- EPOXY INJECTION CRACK REPAIR

NOTES:

1. FOR GENERAL NOTES, SEE SHEETS XX AND XX.
2. FOR ADDITIONAL DIMENSIONS AND DETAILS, SEE EXISTING BRIDGE PLANS.
3. ADJUSTED REPAIR QUANTITIES TOTALS INCLUDE 30% CONTINGENCY FOR CONCRETE REPAIR DETAILS, SEE SHEETS XX THRU XX.

2 0 2 4 ft.
¼" = 1'-0"

NO.	REVISION	DATE	BY

WEST VIRGINIA DEPARTMENT OF TRANSPORTATION
DIVISION OF HIGHWAYS
ENGINEERING DIVISION

I-64 OVER KANAWHA RIVER
EUGENE A. CARTER MEMORIAL BRIDGE +3
SUBSTRUCTURE REPAIR
PIER FD

DESIGNED	DATE
MAB	12/25
DRAWN	
DJC	12/25
CHECKED	
REVIEWED	

Mead & Hunt

MEAD & HUNT INC.
CONSULTING ENGINEERS
CHARLESTON, WV
304-345-6712

SHEET OF
BRIDGE NO. 2563.6

X:\324160\251911.01\TECH\Structures\Ramp F\sheets\str_pir_003_Ramp F_Eugene Carter Memorial Bridge.dgn
$DD-MMM-YYYY HH:MM$
1420djc

PROJECT NUMBERS		DISTRICT	COUNTY	SHEET NO.	TOTAL
STATE	FEDERAL				
S320-64-57.44 00	NHPP-0064 (497)D	1	KANAWHA		

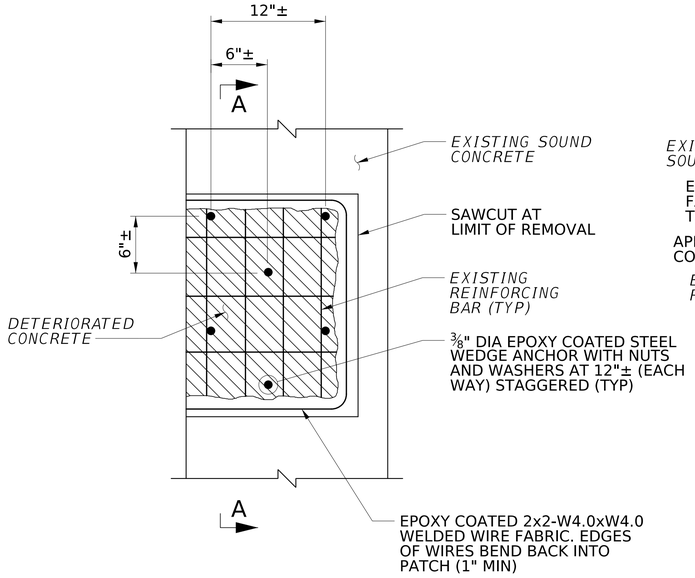

ELEVATION

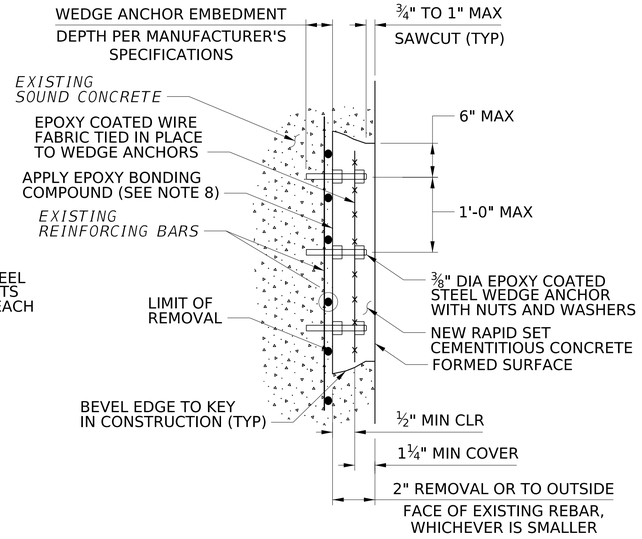

SECTION A-A

REPAIR C1B

NOT TO SCALE
CONCRETE SUBSTRUCTURE REPAIR USING
RAPID SET CEMENTITIOUS CONCRETE

NOTE: DEPTH OF DETERIORATED CONCRETE LESS THAN OR EQUAL TO 2".

REPAIR C1B NOTES, REPAIR DEPTH LESS THAN OR EQUAL TO 2":

1. PROVIDE SATISFACTORY PROTECTIVE SHIELDING BELOW ALL REPAIR AREAS. PROTECTIVE SHIELDING IS INCIDENTAL TO ITEM #601030-000.
2. THE ENGINEER WILL DETERMINE THE EXTENT OF THE REPAIR AREAS.
3. SQUARE OFF DETERIORATED CONCRETE TO SOUND CONCRETE WITH A SAWCUT OF ¾" MINIMUM TO 1" MAXIMUM BUT NOT TO THE DEPTH OF THE REINFORCING STEEL. BACK BEVEL EDGE BEYOND SAWCUT.
4. USE HAND TOOLS TO REMOVE ALL LOOSE AND DELAMINATED CONCRETE TO PROVIDE A SOUND BOND BETWEEN EXISTING CONCRETE AND NEW CONCRETE. PNEUMATIC HAMMERS WITH IMPACT RATINGS OF 30 FT/LB OR LESS MAY BE USED IF REQUIRED.
5. USE A PACHOMETER TO LOCATE EXISTING REINFORCING WHEN DRILLING DOWEL HOLES TO AVOID DRILLING THROUGH EXISTING BARS.
6. INSTALL WEDGE ANCHORS. USE WEDGE ANCHORS ONLY WHEN LEAST DIMENSION OF DETERIORATED CONCRETE IS GREATER THAN 2'-0".
7. CLEAN EXISTING CONCRETE MEETING THE REQUIREMENTS OF SSPC-SP13, PRIOR TO PLACING THE EPOXY BONDING COMPOUND. CLEAN EXISTING REINFORCING, IF EXPOSED, BY SANDBLASTING MEETING THE REQUIREMENTS OF SSPC-SP10, AND APPLY EPOXY PAINT.
8. APPLY AN EPOXY BONDING COMPOUND BETWEEN THE EXISTING AND THE RAPID SET CEMENTITIOUS CONCRETE.
9. ALTERNATE WIRE FABRIC MAY BE SUBSTITUTED FOR 2x2-W4.0xW4.0, PROVIDED WIRE SPACING DOES NOT EXCEED 4" AND AN EQUIVALENT STEEL AREA IS PROVIDED.
10. CONCRETE REPAIRS INDICATED ARE PAYABLE UNDER ITEM #601030-000, PATCHING CONCRETE STRUCTURES, REPAIR TYPE C1B
11. CONCRETE REMOVAL, EPOXY BONDING COMPOUND, WEDGE ANCHORS, EPOXY COATED WIRE FABRIC, HOLES FOR ANCHORS AND RAPID SET CEMENTITIOUS CONCRETE ARE INCIDENTAL TO ITEM #601030-000.
12. REPAIR ANY CONCRETE DAMAGED DURING THE OPERATIONS TO THE SATISFACTION OF THE ENGINEER AT NO ADDITIONAL COST TO THE DIVISION.

NOTES:

1. FOR GENERAL NOTES, SEE SHEETS $GN3$ & $GN4$

NO.	REVISION	DATE	BY

WEST VIRGINIA DEPARTMENT OF TRANSPORTATION
DIVISION OF HIGHWAYS
ENGINEERING DIVISION

I-64 OVER KANAWHA RIVER
EUGENE A. CARTER MEMORIAL BRIDGE +3

CONCRETE REPAIR DETAILS (1 OF 3)

DESIGNED	DATE
KCO	09/25
DRAWN	
SCN	09/25
CHECKED	
REVIEWED	

HDR ENGINEERING INC.
CONSULTING ENGINEERS
CHARLESTON, WV
681-341-6100

SHEET $CR01$ OF
BRIDGE NO. 2563.6

SNOLEN $DD-MMM-YYYY HH:MM$ pw://pwhdruseas02.intranet.hdr:HDR_US_East_02/Documents/WV_DOT/WVDOT-Eugene_Carter_Bridge_3/6.0_CAD_BIM/6.2_WIP/HDR/6.2.2_Sheet_Files/23_Structure/2.300 Conc Rep Dets 1.dgn

PROJECT NUMBERS		DISTRICT	COUNTY	SHEET NO.	TOTAL
STATE	FEDERAL				
S320-64-57.44 00	NHPP-0064 (497)D	1	KANAWHA		

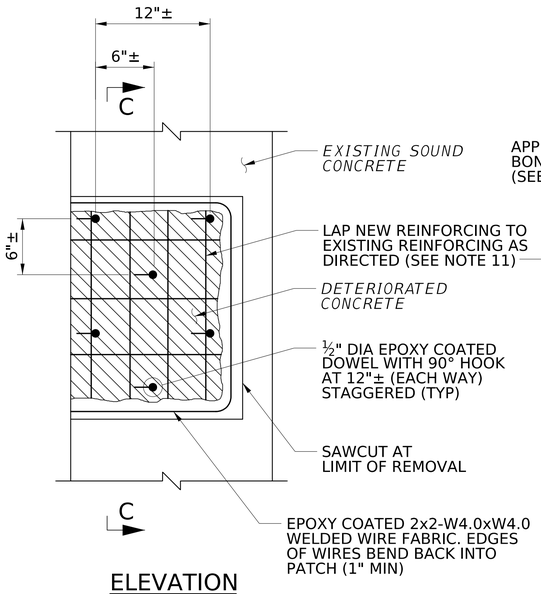

ELEVATION

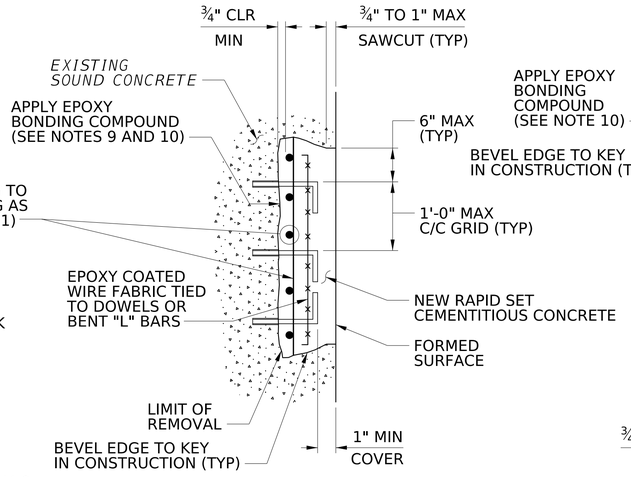

SECTION C-C
NEW REINFORCING

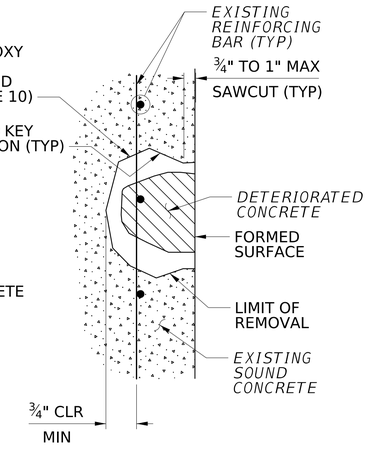

SECTION C-C
EXISTING REINFORCING

REPAIR C1C NOTES, REPAIR DEPTH GREATER THAN 2":

1. PROVIDE SATISFACTORY PROTECTIVE SHIELDING BELOW ALL REPAIR AREAS. PROTECTIVE SHIELDING IS INCIDENTAL TO ITEM #601030-000.
2. THE ENGINEER WILL DETERMINE THE EXTENT OF THE REPAIR AREAS AND NEED FOR NEW REINFORCING BARS.
3. SQUARE OFF DETERIORATED CONCRETE TO SOUND CONCRETE WITH A SAWCUT OF ¾" MINIMUM TO 1" MAXIMUM BUT NOT TO THE DEPTH OF THE REINFORCING STEEL. BACK BEVEL EDGE BEYOND SAWCUT.
4. USE HAND TOOLS TO REMOVE ALL LOOSE AND DELAMINATED CONCRETE TO PROVIDE A SOUND BOND BETWEEN EXISTING CONCRETE AND NEW CONCRETE. PNEUMATIC HAMMERS WITH IMPACT RATINGS OF 30 FT/LB OR LESS MAY BE USED IF REQUIRED.
5. IF DETERIORATED CONCRETE EXTENDS BEYOND THE REAR FACE OF PRIMARY REINFORCING, REMOVE THE CONCRETE TO AT LEAST ¾" BEHIND ALL REINFORCING OR UNTIL ALL UNSOUND CONCRETE HAS BEEN REMOVED, WHICHEVER IS GREATER.
6. USE DOWELS OR BENT "L" BARS ONLY WHEN LEAST DIMENSION OF DETERIORATED CONCRETE IS GREATER THAN 2'-0" AND NEW REINFORCING CANNOT ADEQUATELY BE DEVELOPED BY LAPPING WITH EXISTING REINFORCING.
7. USE HILTI HIT-RE EPOXY ANCHORING SYSTEM (OR EQUAL) IN DOWEL HOLES. USE THE GREATER OF 6" MINIMUM EMBEDMENT OR IN ACCORDANCE WITH THE MANUFACTURER'S INSTRUCTIONS. PROVIDE HOLE DIAMETER IN ACCORDANCE WITH THE MANUFACTURER'S INSTRUCTIONS.
8. AN EPOXY COATED #4 DEFORMED REINFORCING BENT "L" BAR MAY REPLACE THE ½" DIA DOWEL WITH HOOK.
9. CLEAN EXISTING CONCRETE MEETING THE REQUIREMENTS OF SSPC-SP13, PRIOR TO PLACING THE EPOXY BONDING COMPOUND. CLEAN EXISTING REINFORCING, IF EXPOSED BY SANDBLASTING MEETING THE REQUIREMENTS OF SSPC-SP10, AND APPLY EPOXY PAINT.
10. APPLY AN EPOXY BONDING COMPOUND BETWEEN THE EXISTING AND THE NEW RAPID SET CEMENTITIOUS CONCRETE.
11. LAP EQUIVALENT NEW REINFORCING, AS DIRECTED, TO THE EXISTING REINFORCING, AS PER CURRENT AASHTO LRFD BRIDGE DESIGN SPECIFICATIONS.
12. NEW REINFORCING BARS SHALL BE EPOXY COATED UNLESS OTHERWISE NOTED.
13. ALTERNATE WIRE FABRIC MAY BE SUBSTITUTED FOR 2x2-W4.0xW4.0, PROVIDED WIRE SPACING DOES NOT EXCEED 4" AND AN EQUIVALENT STEEL AREA IS PROVIDED. NEW REINFORCING BARS MAY BE OMITTED IF WIRE FABRIC STEEL AREA EXCEEDS EXISTING REINFORCING.
14. CONCRETE REPAIRS INDICATED ARE PAYABLE UNDER ITEM #601030-000, PATCHING CONCRETE STRUCTURES, REPAIR TYPE C1C.
15. CONCRETE REMOVAL, EPOXY BONDING COMPOUND, ½" DIA "L" BARS, NEW REINFORCEMENT, EPOXY COATED WIRE FABRIC, RAPID SET CEMENTITIOUS CONCRETE, DOWEL HOLES AND HILTI HIT-RE EPOXY ARE INCIDENTAL TO ITEM #601030-000.
16. REPAIR ANY CONCRETE DAMAGED DURING THE OPERATIONS TO THE SATISFACTION OF THE ENGINEER AT NO ADDITIONAL COST TO THE DIVISION.

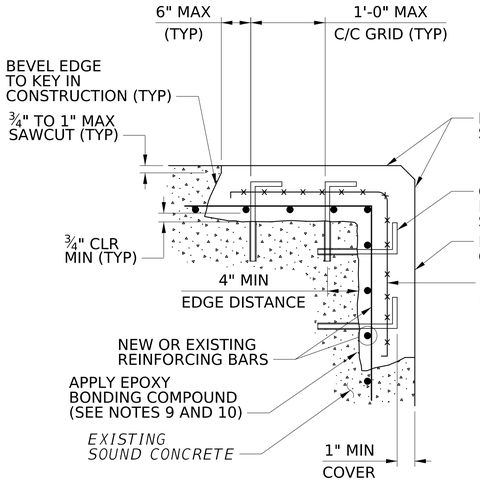

CORNER REPAIR DETAIL

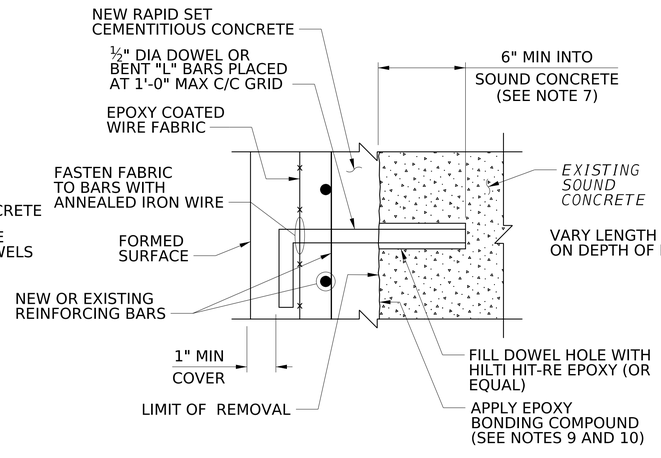

TYPICAL "L" BAR INSTALLATION DETAIL

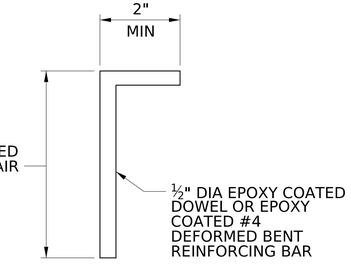

DOWEL OR BENT "L" BAR DETAIL

NOTES:

1. FOR GENERAL NOTES, SEE SHEETS $GN3$ AND $GN4$

REPAIR C1C

NOT TO SCALE

CONCRETE SUBSTRUCTURE REPAIR USING NEW RAPID SET CEMENTITIOUS CONCRETE

NOTE: REPAIR IS USED WHEN DEPTH OF DETERIORATED CONCRETE IS GREATER THAN 2".

NO.	REVISION	DATE	BY

WEST VIRGINIA DEPARTMENT OF TRANSPORTATION
DIVISION OF HIGHWAYS
ENGINEERING DIVISION

I-64 OVER KANAWHA RIVER
EUGENE A. CARTER MEMORIAL BRIDGE +3

CONCRETE REPAIR DETAILS
(2 OF 3)

DESIGNED	DATE
KCO	09/25
DRAWN	
SCN	09/25
CHECKED	
REVIEWED	

HDR ENGINEERING INC.
CONSULTING ENGINEERS
CHARLESTON, WV
681-341-6100

SHEET $CR02$ OF

BRIDGE NO. 2563.6

SNOLEN $DD-MMM-YYYY HH:MM$ pw://pwhdruseas02.Intranet.hdr:HDR_US_East_02/Documents/WV_DOT/WVDOT-Eugene_Carter_Bridge_3/6.0_CAD_BIM/6.2_WIP/HDR/6.2.2_Sheet_Files/23_Structure/2.301_Conc Rep Dets 2.dgn

PROJECT NUMBERS		DISTRICT	COUNTY	SHEET NO.	TOTAL
STATE	FEDERAL				
S320-64-57.44 00	NHPP-0064 (497)D	1	KANAWHA		

REPAIR C2 NOTES:

1. CRACKS GREATER THAN $\frac{1}{16}$" IN WIDTH SHALL BE REPAIRED USING EPOXY INJECTION.
2. THOROUGHLY CLEAN THE SURFACES OF THE CRACK REPAIR AREA.
3. GLUE INJECTION PORTS IN PLACE ALONG THE CRACK AT SPACINGS AS RECOMMENDED BY THE MANUFACTURER.
4. SEAL THE CRACK SURFACE AND AREAS SURROUNDING THE INJECTION PORTS.
5. DO NOT INJECT THE CRACKED AREA UNTIL AFTER THE SURFACE SEALER HAS HARDENED. INJECT EPOXY USING MEANS AS RECOMMENDED BY THE MANUFACTURER.
6. START INJECTION ON THE LOWEST POINT ON THE CRACK. MOVE TO THE NEXT HIGHER PORT AND CONTINUE UNTIL THE CRACK IS COMPLETELY FILLED.
7. REMOVE THE INJECTION PORTS AFTER THE EPOXY HAS ACHIEVED AN INITIAL CURE.
8. REFER TO SPECIAL PROVISION FOR ADDITIONAL INFORMATION.

REPAIR C2

EPOXY INJECTION CRACK REPAIR

REPAIR C3 NOTES:

1. PERFORM ALL SUBSTRUCTURE REPAIRS PRIOR TO PLACING CONCRETE PROTECTIVE COATING.
2. PERFORM BRIDGE CLEANING IN ACCORDANCE WITH SECTION 685 PRIOR TO APPLYING CONCRETE PROTECTIVE COATING.
3. CONCRETE PROTECTIVE COATING, ITEM 601019-001, SHALL BE APPLIED TO ALL EXPOSED SURFACES OF ALL SUBSTRUCTURE UNITS.
4. COLOR OF PROTECTIVE COATING SHALL BE AMS-STD-595A 37925.
5. REFER TO THE 2019 SUPPLEMENTAL SPECIFICATIONS SECTION 601.13 AND 711.5 FOR ADDITIONAL INFORMATION.
6. FOR ADDITIONAL NOTES AND REQUIRED LOCATIONS OF COATING, SEE SHEETS $GN3$ AND $GN4$XX.

REPAIR C3

CONCRETE PROTECTIVE COATING

ADDITIONAL CONCRETE REPAIR DETAILS TO BE ADDED:

C4 - EPOXY RESIN PROTECTIVE COATING NOTES

NOTES:

1. FOR GENERAL NOTES, SEE SHEETS $GN3$ AND $GN4$

NO.	REVISION	DATE	BY

WEST VIRGINIA DEPARTMENT OF TRANSPORTATION
DIVISION OF HIGHWAYS
ENGINEERING DIVISION

I-64 OVER KANAWHA RIVER
EUGENE A. CARTER MEMORIAL BRIDGE +3

CONCRETE REPAIR DETAILS (3 OF 3)

DESIGNED	DATE
KCO	09/25
DRAWN	
SCN	09/25
CHECKED	
REVIEWED	

HDR ENGINEERING INC.
CONSULTING ENGINEERS
CHARLESTON, WV
681-341-6100

SHEET $CR03$ OF

BRIDGE NO. 2563.6

SNOLEN $DD-MMM-YYYY HH:MM$ pw://pwhdruseas02.intranet.hdr:HDR_US_East_02/Documents/WV_DOT/WVDOT-Eugene_Carter_Bridge_3/6.0_CAD_BIM/6.2_WIP/HDR/6.2.2_Sheet_Files/23_Structure/2.302_Conc Rep Dets 3.dgn

PROJECT NUMBERS		DISTRICT	COUNTY	SHEET NO.	TOTAL
STATE	FEDERAL				
S320-64-57.44 00	NHPP-0064 (497)D	1	KANAWHA		

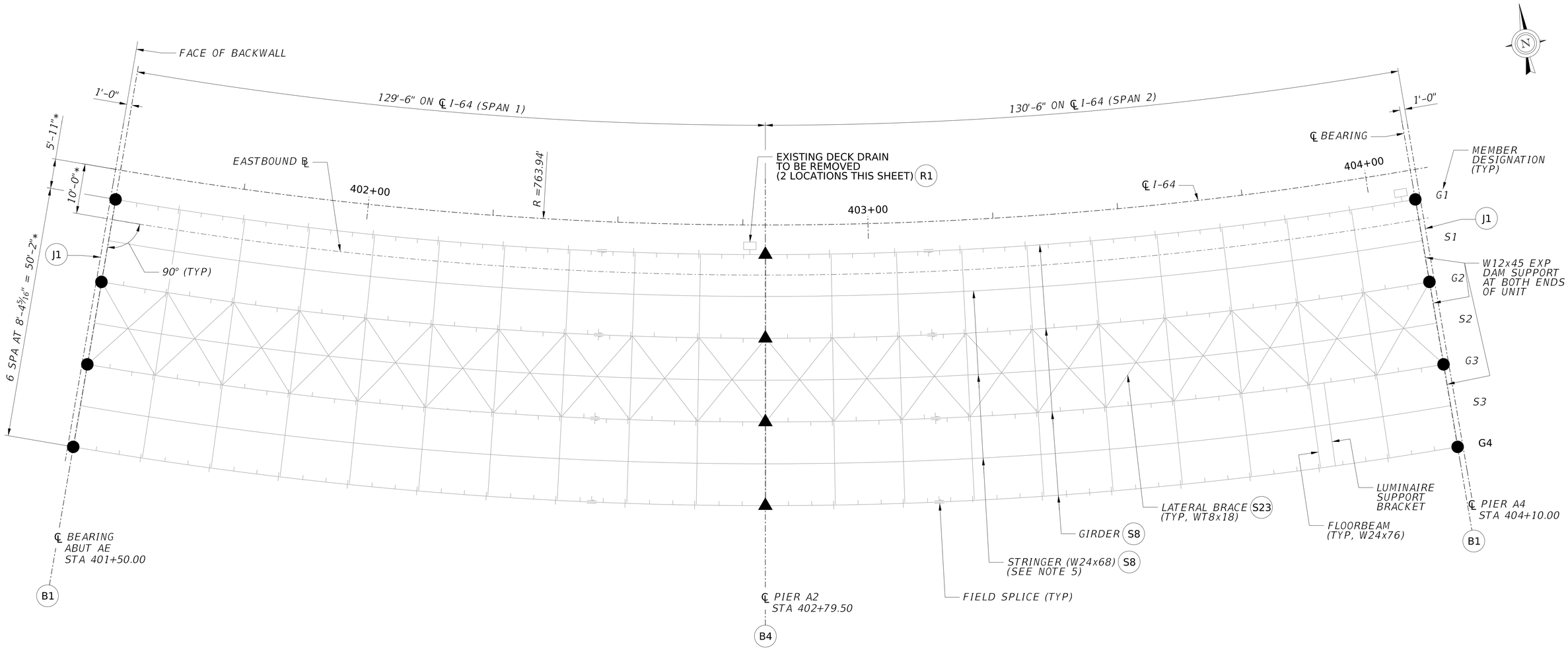

FRAMING PLAN (EB)
SPAN 1 AND SPAN 2

0 2 10
Feet

LEGEND:

● - B1

▲ - B4

*DENOTES RADIAL DIMESION

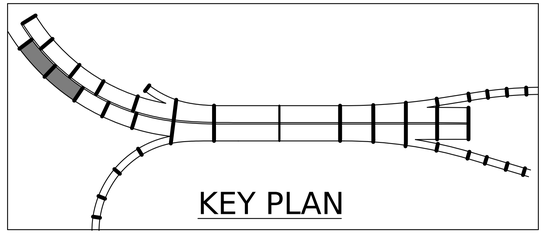

EB SPANS 1 AND 2 REPAIRS		
REPAIR ID	NO. OF REPAIR LOCATIONS THIS SHEET	NOTES
B1	8	NEW GUIDED EXP BEARINGS
B4	4	CLEAN AND LUBIRCATE EXISTING BEARINGS
J1	2	56' JOINT LENGTH EACH - STRIP SEAL
P1	N/A	AT STEEL REPAIR LOCATIONS
R1	N/A	WORK INCLUDED IN SYSTEM REPLACEMENT
S8	N/A	STUDS ON GIRDERS AND STRINGERS - SEE DETAILS
S23	40	REMOVE BRACING MEMBER

NOTES:

1. FOR GENERAL NOTES, SEE SHEETS XX THRU XX.
2. FOR ADDITIONAL EXISTING FRAMING INFORMATION, SEE ORIGINAL PLANS.
3. IN ORIGINAL PLANS, THESE SPANS WERE DESIGNATED A2 AND A4.
4. EXISTING STRINGERS ARE STRAIGHT AND SPLICED AT EVERY SECOND FLOORBEAM.
5. STRINGERS MUST BE TEMPORARILY BRACED LATERALLY WHILE NEW DECK IS PLACED. PROVIDE TEMPORARY BRACING AT A SPACING NOT TO EXCEED XX FEET. REMOVE BRACING AFTER DECK HAS CURED.

NO.	REVISION	DATE	BY

WEST VIRGINIA DEPARTMENT OF TRANSPORTATION
DIVISION OF HIGHWAYS
ENGINEERING DIVISION

I-64 OVER KANAWHA RIVER
EUGENE A. CARTER MEMORIAL BRIDGE +3
FRAMING PLAN (EB)
SPAN 1 AND SPAN 2

DESIGNED	MAB
DATE	09/25
DRAWN	SS
DATE	09/25
CHECKED	
REVIEWED	

HDR ENGINEERING INC.
CONSULTING ENGINEERS
CHARLESTON, WV
681-341-6100

SHEET
OF
BRIDGE NO.
2563.6

pw://pwhdruseas02.intranet.hdr:HDR_US_East_02/Documents/WV_DOT/WVDOT-Eugene_Carter_Bridge_3/6.0_CAD_BIM/6.2_WIP/HDR/6.2.2_Sheet_Files/23_Structure/3.000 Framing Plan (EB) Span 1 and Span 2
$DD-MMM-YYYY HH:MM$
AGRIES

PROJECT NUMBERS		DISTRICT	COUNTY	SHEET NO.	TOTAL
STATE	FEDERAL				
S320-64-57.44 00	NHPP-0064 (497)D	1	KANAWHA		

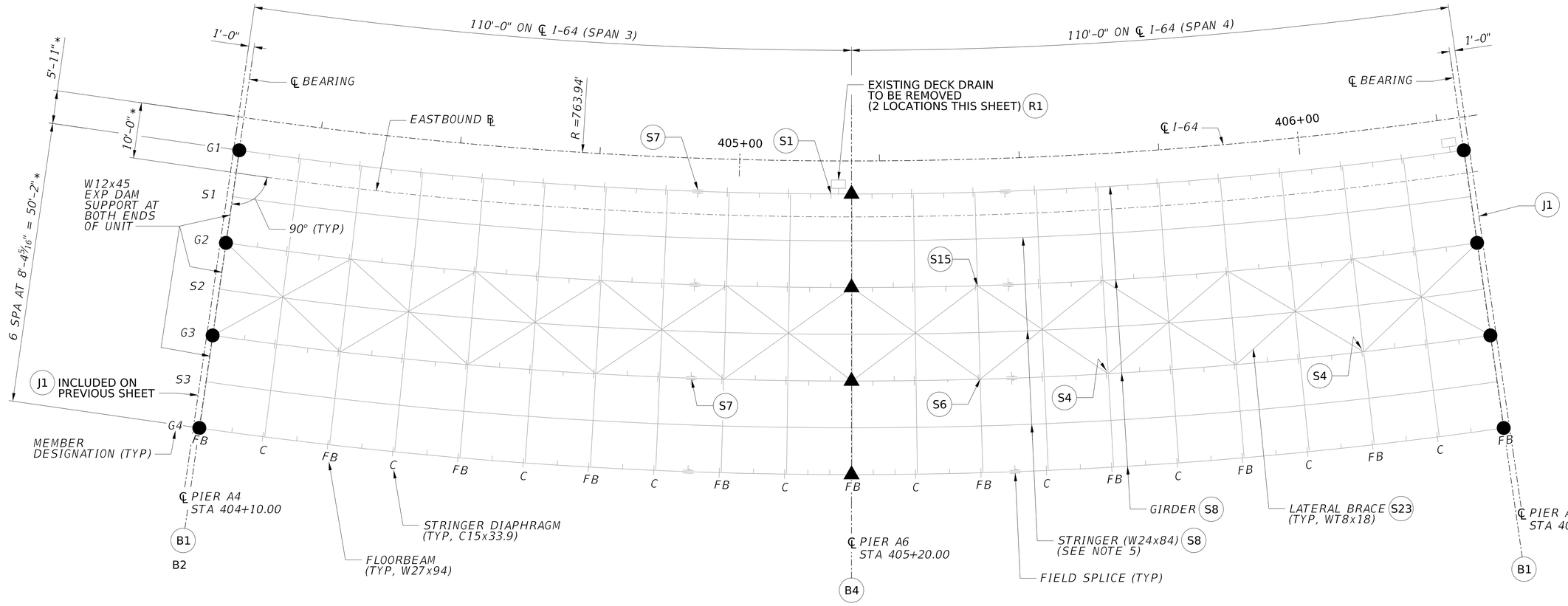

FRAMING PLAN (EB)
SPAN 3 AND SPAN 4

0 2 10
Feet

LEGEND:

● - B1

▲ - B4

*DENOTES RADIAL DIMESION

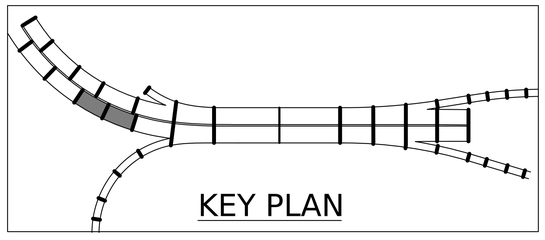

EB SPANS 3 AND 4 REPAIRS		
REPAIR ID	NO. OF REPAIR LOCATIONS THIS SHEET	NOTES
B1	8	NEW GUIDED EXP BEARINGS
B4	4	CLEAN AND LUBIRCATE EXISTING BEARINGS
J1	1	56' JOINT LENGTH - STRIP SEAL
P1	N/A	AT STEEL REPAIR LOCATIONS
R1	N/A	WORK INCLUDED IN SYSTEM REPLACEMENT
S4	2	
S6	1	
S7	2	
S8	N/A	STUDS ON GIRDERS AND STRINGERS - SEE DETAILS
S15	1	
S23	20	REMOVE BRACING MEMBER

NOTES:

1. FOR GENERAL NOTES, SEE SHEETS XX THRU XX.
2. FOR ADDITIONAL EXISTING FRAMING INFORMATION, SEE ORIGINAL PLANS.
3. IN ORIGINAL PLANS, THESE SPANS WERE DESIGNATED A6 AND A8.
4. EXISTING STRINGERS ARE STRAIGHT AND SPLICED AT EVERY FLOORBEAM.
5. TEMPORARY BRACING OF STRINGERS NOT REQUIRED THIS UNIT.

NO.	REVISION	DATE	BY

WEST VIRGINIA DEPARTMENT OF TRANSPORTATION
DIVISION OF HIGHWAYS
ENGINEERING DIVISION

I-64 OVER KANAWHA RIVER
EUGENE A. CARTER MEMORIAL BRIDGE +3
FRAMING PLAN (EB)
SPAN 3 AND SPAN 4

DESIGNED	MAB
DATE	09/25
DRAWN	SS
DATE	09/25
CHECKED	
REVIEWED	

HDR ENGINEERING INC.
CONSULTING ENGINEERS
CHARLESTON, WV
681-341-6100

SHEET
OF
BRIDGE NO.
2563.6

pw://pwhdruseas02.intranet.hdr:HDR_US_East_02/Documents/WV_DOT/WVDOT-Eugene_Carter_Bridge_3/6.0_CAD_BIM/6.2_WIP/HDR/6.2.2_Sheet_Files/23_Structure/3.001 Framing Plan (EB) Span 3 and Span 4
$DD-MMM-YYYY HH:MM$
AGRIES

pw://pwhdruseas02.intranet.hdr:HDR_US_East_02/Documents/WV_DOT/WVDOT-Eugene_Carter_Bridge_3/6.0_CAD_BIM/6.2_WIP/HDR/6.2.2_Sheet_Files/23_Structure/3.002 Framing Plan (EB) Span 5, Span 6 and Span DA
$DD-MMM-YYYY HH:MM$
AGRIES

PROJECT NUMBERS		DISTRICT	COUNTY	SHEET NO.	TOTAL
STATE	FEDERAL				
S320-64-57.44 00	NHPP-0064 (497)D	1	KANAWHA		

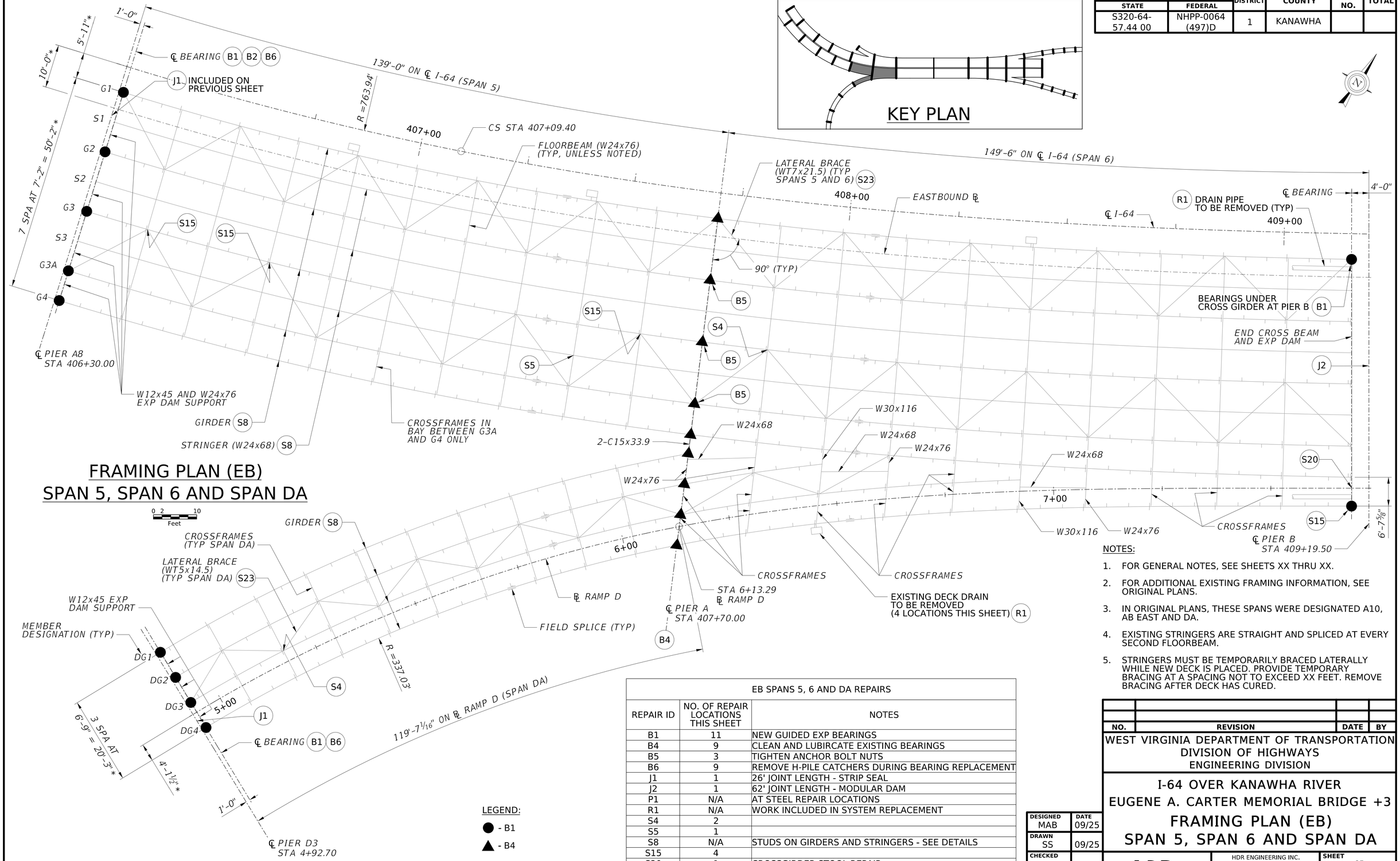

FRAMING PLAN (EB)
SPAN 5, SPAN 6 AND SPAN DA

0 2 10
Feet

LEGEND:

● - B1

▲ - B4

*DENOTES RADIAL DIMESION

EB SPANS 5, 6 AND DA REPAIRS		
REPAIR ID	NO. OF REPAIR LOCATIONS THIS SHEET	NOTES
B1	11	NEW GUIDED EXP BEARINGS
B4	9	CLEAN AND LUBIRCATE EXISTING BEARINGS
B5	3	TIGHTEN ANCHOR BOLT NUTS
B6	9	REMOVE H-PILE CATCHERS DURING BEARING REPLACEMENT
J1	1	26' JOINT LENGTH - STRIP SEAL
J2	1	62' JOINT LENGTH - MODULAR DAM
P1	N/A	AT STEEL REPAIR LOCATIONS
R1	N/A	WORK INCLUDED IN SYSTEM REPLACEMENT
S4	2	
S5	1	
S8	N/A	STUDS ON GIRDERS AND STRINGERS - SEE DETAILS
S15	4	
S20	1	CROSSGIRDER STOOL REPAIR
S23	53	REMOVE BRACING MEMBER

NOTES:

1. FOR GENERAL NOTES, SEE SHEETS XX THRU XX.
2. FOR ADDITIONAL EXISTING FRAMING INFORMATION, SEE ORIGINAL PLANS.
3. IN ORIGINAL PLANS, THESE SPANS WERE DESIGNATED A10, AB EAST AND DA.
4. EXISTING STRINGERS ARE STRAIGHT AND SPLICED AT EVERY SECOND FLOORBEAM.
5. STRINGERS MUST BE TEMPORARILY BRACED LATERALLY WHILE NEW DECK IS PLACED. PROVIDE TEMPORARY BRACING AT A SPACING NOT TO EXCEED XX FEET. REMOVE BRACING AFTER DECK HAS CURED.

NO.	REVISION	DATE	BY

WEST VIRGINIA DEPARTMENT OF TRANSPORTATION
DIVISION OF HIGHWAYS
ENGINEERING DIVISION

I-64 OVER KANAWHA RIVER
EUGENE A. CARTER MEMORIAL BRIDGE +3
FRAMING PLAN (EB)
SPAN 5, SPAN 6 AND SPAN DA

DESIGNED	MAB
DATE	09/25
DRAWN	SS
DATE	09/25
CHECKED	
REVIEWED	

HDR ENGINEERING INC.
CONSULTING ENGINEERS
CHARLESTON, WV
681-341-6100

SHEET OF
BRIDGE NO. 2563.6

PROJECT NUMBERS		DISTRICT	COUNTY	SHEET NO.	TOTAL
STATE	FEDERAL				
S320-64-57.44 00	NHPP-0064 (497)D	1	KANAWHA		

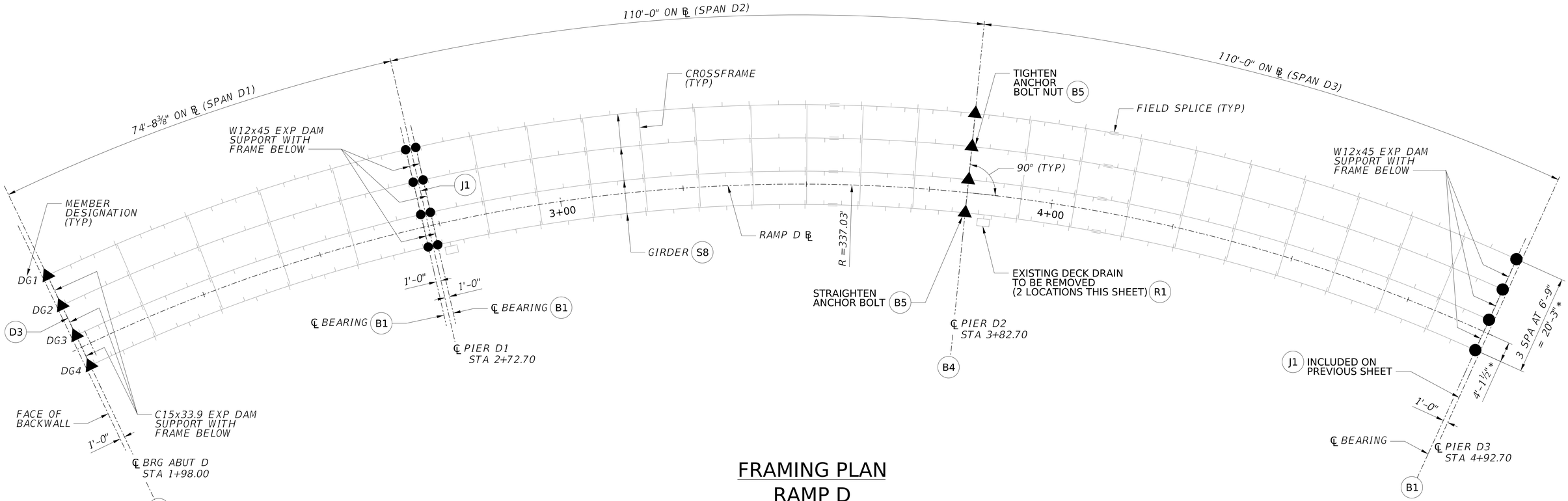

FRAMING PLAN
RAMP D

0 2 10
Feet

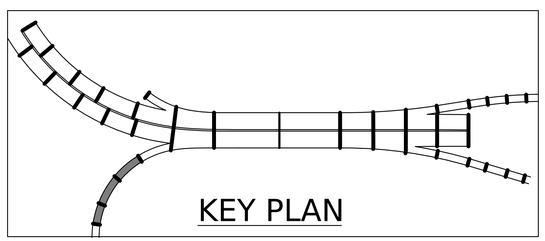

LEGEND:

● - B1

▲ - B4

*DENOTES RADIAL DIMESION

RAMP D REPAIRS		
REPAIR ID	NO. OF REPAIR LOCATIONS THIS SHEET	NOTES
B1	12	NEW GUIDED EXP BEARINGS
B4	8	CLEAN AND LUBIRCATE EXISTING BEARINGS
B5	6	MISC BEARING REPAIRS
D3	1	SEMI INTEGRAL (DRILL HOLES IN WEBS)
J1	1	26' JOINT LENGTH - STRIP SEAL
P1	N/A	AT STEEL REPAIR LOCATIONS
R1	N/A	WORK INCLUDED IN SYSTEM REPLACEMENT
S8	N/A	STUDS ON GIRDERS - SEE DETAILS

NOTES:

1. FOR GENERAL NOTES, SEE SHEETS XX THRU XX.
2. FOR ADDITIONAL EXISTING FRAMING INFORMATION, SEE ORIGINAL PLANS.

NO.	REVISION	DATE	BY

WEST VIRGINIA DEPARTMENT OF TRANSPORTATION
DIVISION OF HIGHWAYS
ENGINEERING DIVISION

I-64 OVER KANAWHA RIVER
EUGENE A. CARTER MEMORIAL BRIDGE +3
FRAMING PLAN
RAMP D

DESIGNED	MAB
DATE	09/25
DRAWN	SS
DATE	09/25
CHECKED	
REVIEWED	

HDR ENGINEERING INC.
CONSULTING ENGINEERS
CHARLESTON, WV
681-341-6100

SHEET
OF
BRIDGE NO.
2563.6

pw://pwhdruseas02.intranet.hdr:HDR_US_East_02/Documents/WV_DOT/WVDOT-Eugene_Carter_Bridge_3/6.0_CAD_BIM/6.2_WIP/HDR/6.2.2_Sheet_Files/23_Structure/3.003 Framing Plan Ramp D
$DD-MMM-YYYY HH:MM$
AGRIES

PROJECT NUMBERS		DISTRICT	COUNTY	SHEET NO.	TOTAL
STATE	FEDERAL				
S320-64-57.44 00	NHPP-0064 (497)D	1	KANAWHA		

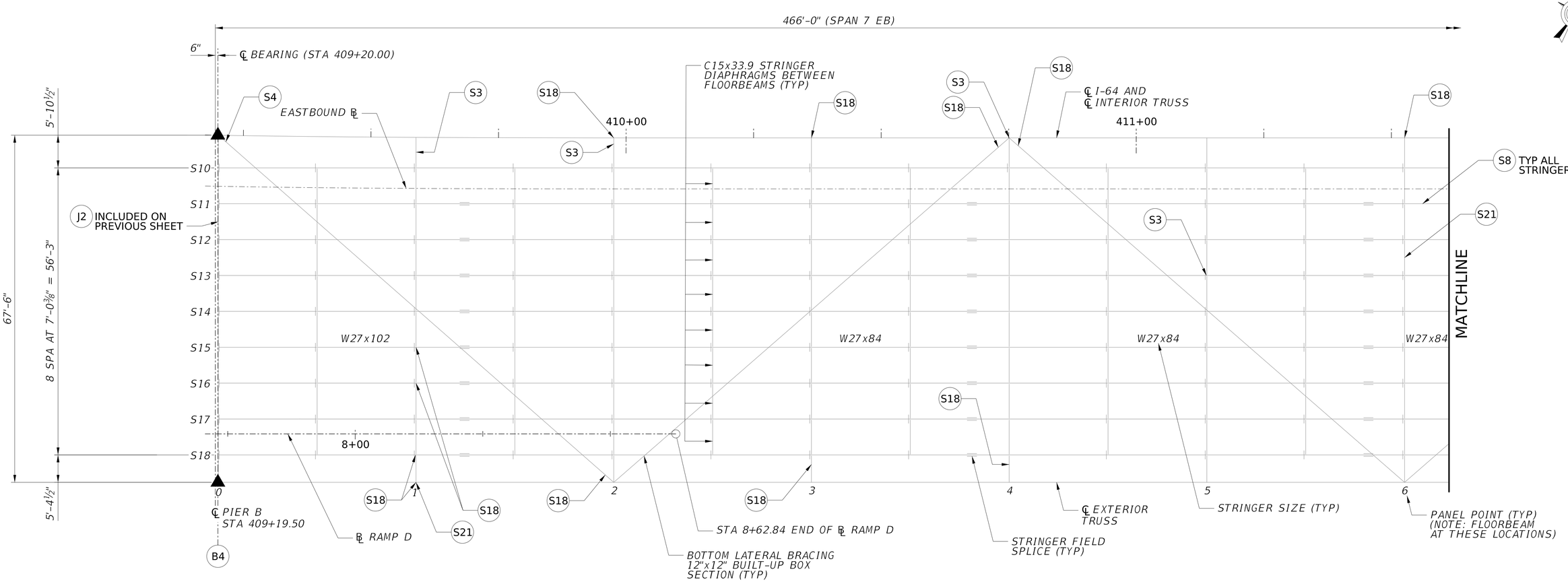

FRAMING PLAN (EB)
SPAN 7

0 2 10
Feet

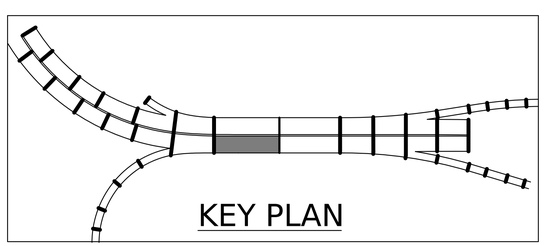

LEGEND:

- ● - B1
- ■ - B2
- ▲ - B4

EB SPAN 7 REPAIRS		
REPAIR ID	NO. OF REPAIR LOCATIONS THIS SHEET	NOTES
B4	2	CLEAN AND LUBIRCATE MAIN TRUSS BEARINGS
P1	N/A	AT STEEL REPAIR LOCATIONS
S3	4	
S4	1	
S8	N/A	STUDS ON STRINGERS - SEE DETAILS
S18	12	PLUS ANY OTHERS FOUND
S21	2	

NOTES:

1. FOR GENERAL NOTES, SEE SHEETS XX THRU XX.
2. FOR ADDITIONAL EXISTING FRAMING INFORMATION, SEE ORIGINAL PLANS.
3. IN ORIGINAL PLANS, THIS SPAN WAS DESIGNATED SPAN A.

NO.	REVISION	DATE	BY

WEST VIRGINIA DEPARTMENT OF TRANSPORTATION
DIVISION OF HIGHWAYS
ENGINEERING DIVISION

I-64 OVER KANAWHA RIVER
EUGENE A. CARTER MEMORIAL BRIDGE +3
FRAMING PLAN (EB)
SPAN 7 (1 OF 2)

DESIGNED	MAB	DATE	09/25
DRAWN	SS		09/25
CHECKED			
REVIEWED			

HDR ENGINEERING INC.
CONSULTING ENGINEERS
CHARLESTON, WV
681-341-6100

SHEET OF
BRIDGE NO. 2563.6

AGRIES $DD-MMM-YYYY HH:MM$ pw://pwhdruseas02.intranet.hdr:HDR_US_East_02/Documents/WV_DOT/WVDOT-Eugene_Carter_Bridge_3/6.0_CAD_BIM/6.2_WIP/HDR/6.2.2_Sheet_Files/23_Structure/3.004 Framing Plan (EB) Span 7 (1 of 2)

PROJECT NUMBERS		DISTRICT	COUNTY	SHEET NO.	TOTAL
STATE	FEDERAL				
S320-64-57.44 00	NHPP-0064 (497)D	1	KANAWHA		

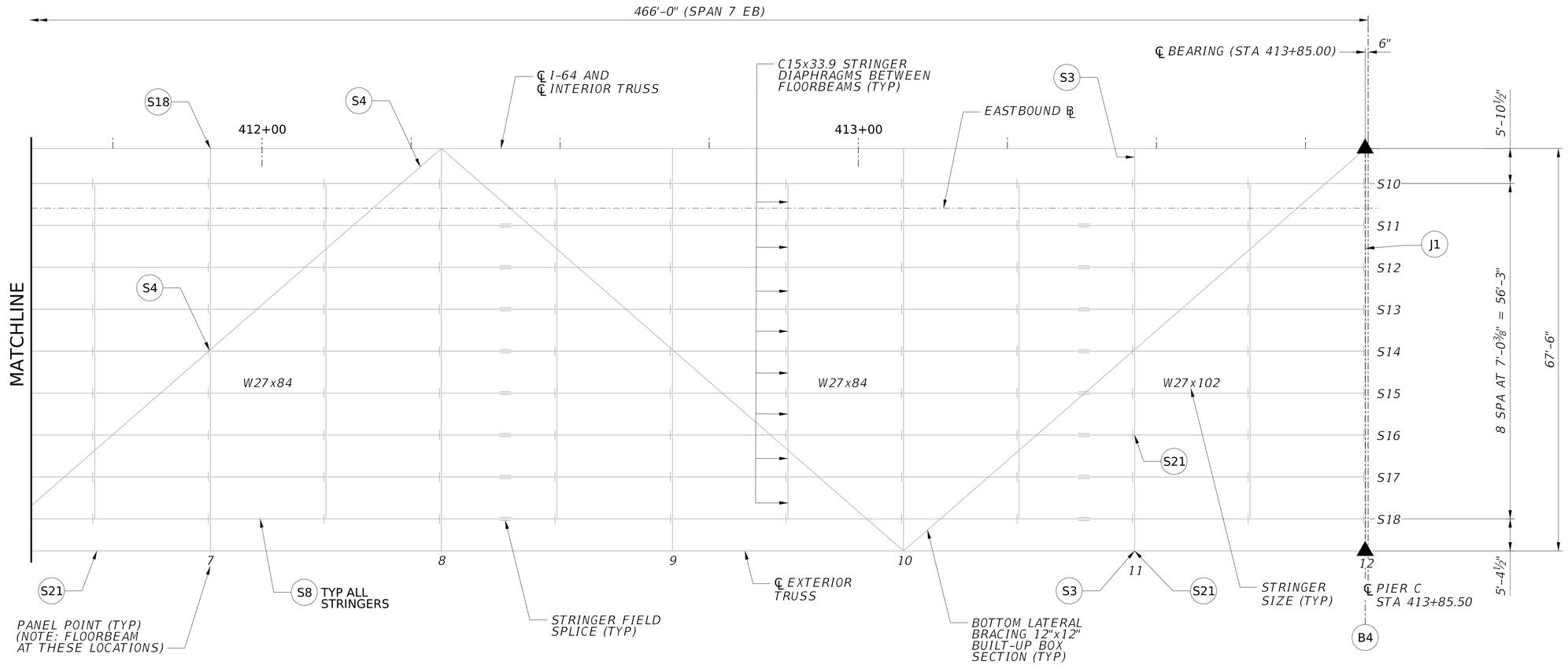

FRAMING PLAN (EB)
SPAN 7

0 2 10
Feet

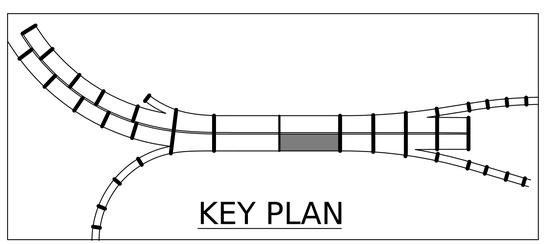

LEGEND:

- ● - B1
- ■ - B2
- ▲ - B4

EB SPAN 7 REPAIRS		
REPAIR ID	NO. OF REPAIR LOCATIONS THIS SHEET	NOTES
B4	2	CLEAN AND LUBIRCATE MAIN TRUSS BEARINGS
P1	N/A	AT STEEL REPAIR LOCATIONS
J1	1	62' JOINT LENGTH - STRIP SEAL
S3	2	
S4	2	
S8	N/A	STUDS ON STRINGERS - SEE DETAILS
S18	1	PLUS ANY OTHERS FOUND
S21	3	

NOTES:

1. FOR GENERAL NOTES, SEE SHEETS XX THRU XX.
2. FOR ADDITIONAL EXISTING FRAMING INFORMATION, SEE ORIGINAL PLANS.
3. IN ORIGINAL PLANS, THIS SPAN WAS DESIGNATED SPAN A.

NO.	REVISION	DATE	BY

WEST VIRGINIA DEPARTMENT OF TRANSPORTATION
DIVISION OF HIGHWAYS
ENGINEERING DIVISION

I-64 OVER KANAWHA RIVER
EUGENE A. CARTER MEMORIAL BRIDGE +3
FRAMING PLAN (EB)
SPAN 7 (2 OF 2)

DESIGNED	MAB	09/25
DRAWN	SS	09/25
CHECKED		
REVIEWED		

HDR ENGINEERING INC.
CONSULTING ENGINEERS
CHARLESTON, WV
681-341-6100

SHEET
OF
BRIDGE NO.
2563.6

AGRIES $DD-MMM-YYYY HH:MM$ pw://pwhdruseas02.intranet.hdr:HDR_US_East_02/Documents/WV_DOT/WVDOT-Eugene_Carter_Bridge_3/6.0_CAD_BIM/6.2_WIP/HDR/6.2.2_Sheet_Files/23_Structure/3.005 Framing Plan (EB) Span 7 (2 of 2)

PROJECT NUMBERS		DISTRICT	COUNTY	SHEET NO.	TOTAL
STATE	FEDERAL				
S320-64-57.44 00	NHPP-0064 (497)D	1	KANAWHA		

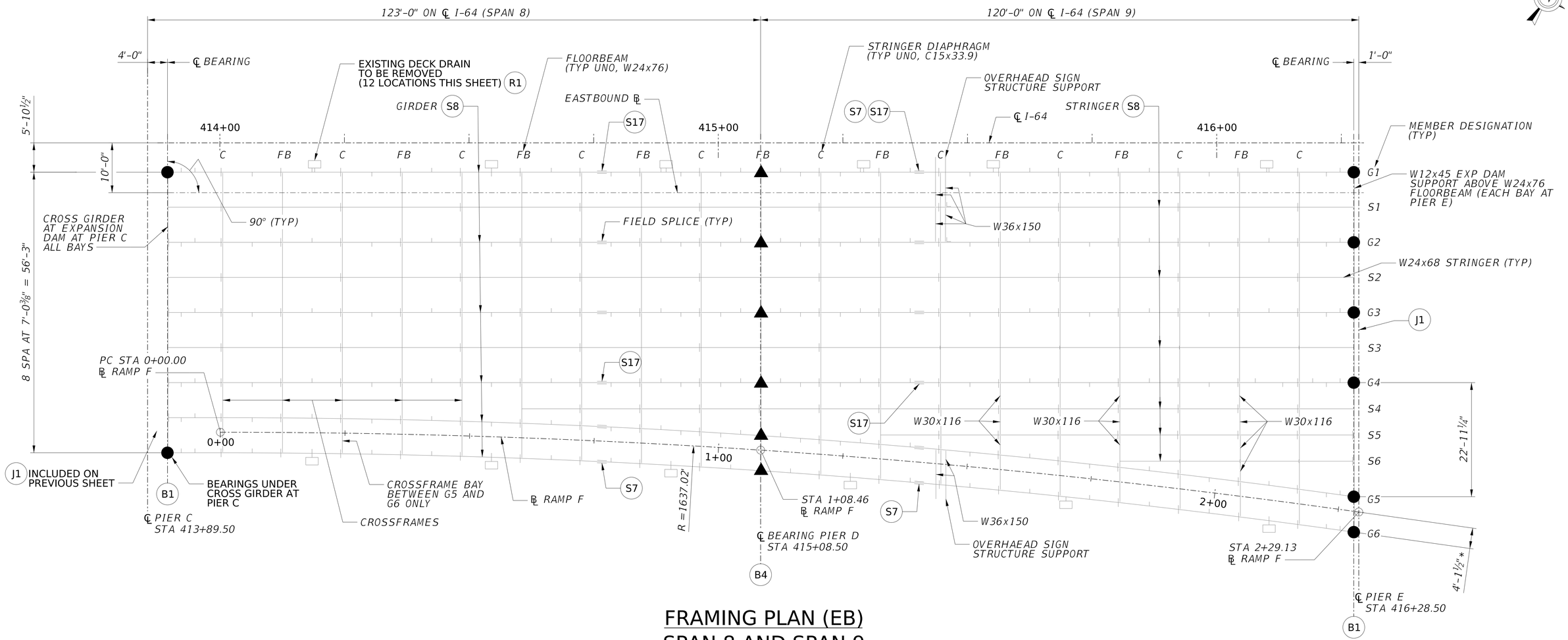

FRAMING PLAN (EB)
SPAN 8 AND SPAN 9

0 2 10
Feet

*DENOTES RADIAL DIMESION

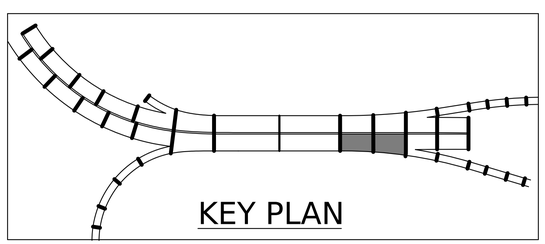

EB SPANS 8 AND 9 REPAIRS		
REPAIR ID	NO. OF REPAIR LOCATIONS THIS SHEET	NOTES
B1	8	NEW GUIDED EXP BEARINGS
B4	6	CLEAN AND LUBIRCATE EXISTING BEARINGS
J1	1	82' JOINT LENGTH - STRIP SEAL
P1	N/A	AT STEEL REPAIR LOCATIONS
R1	N/A	WORK INCLUDED IN SYSTEM REPLACEMENT
S7	3	REPAIR FIELD SPLICE
S8	N/A	INSTALL STUD SHEAR CONNECTORS
S17	4	REPLACE BOLTS

LEGEND:

● - B1

▲ - B4

NOTES:

1. FOR GENERAL NOTES, SEE SHEET XX THRU XX.
2. FOR ADDITIONAL EXISTING FRAMING INFORMATION, SEE ORIGINAL PLANS.
3. IN ORIGINAL PLANS, THESE SPANS WERE DESIGNATED B AND C.
4. EXISTING STRINGERS ARE STRAIGHT AND SPLICED AT EVERY SECOND BAY.

NO.	REVISION	DATE	BY

WEST VIRGINIA DEPARTMENT OF TRANSPORTATION
DIVISION OF HIGHWAYS
ENGINEERING DIVISION

I-64 OVER KANAWHA RIVER
EUGENE A. CARTER MEMORIAL BRIDGE +3
FRAMING PLAN (EB)
SPAN 8 AND SPAN 9

DESIGNED	MAB	09/25
DRAWN	SS	09/25
CHECKED		
REVIEWED		

HDR ENGINEERING INC.
CONSULTING ENGINEERS
CHARLESTON, WV
681-341-6100

SHEET OF
BRIDGE NO. 2563.6

AGRIES $DD-MMM-YYYY HH:MM$ pw://pwhdruseas02.Intranet.hdr:HDR_US_East_02/Documents/WV_DOT/WVDOT-Eugene_Carter_Bridge_3/6.0_CAD_BIM/6.2_WIP/HDR/6.2.2_Sheet_Files/23_Structure/3.006 Framing Plan (EB) Span 8 and Span 9

PROJECT NUMBERS		DISTRICT	COUNTY	SHEET NO.	TOTAL
STATE	FEDERAL				
S320-64-57.44 00	NHPP-0064 (497)D	1	KANAWHA		

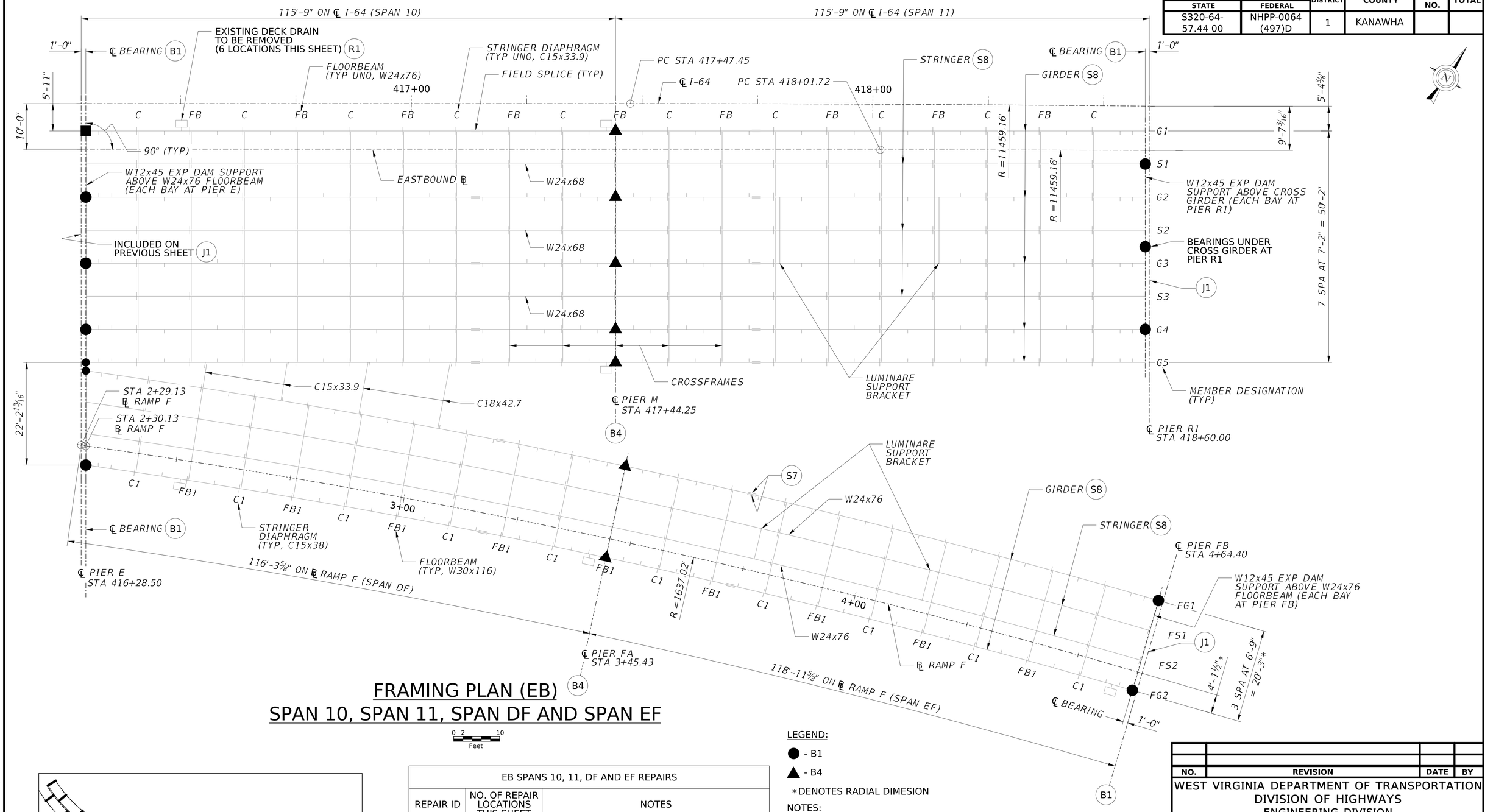

FRAMING PLAN (EB)
SPAN 10, SPAN 11, SPAN DF AND SPAN EF

0 2 10
Feet

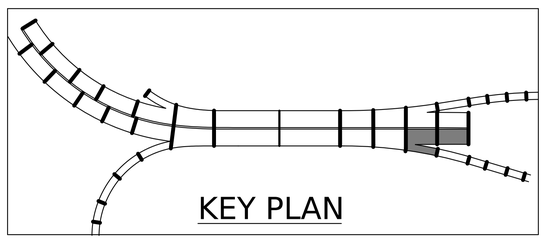

EB SPANS 10, 11, DF AND EF REPAIRS		
REPAIR ID	NO. OF REPAIR LOCATIONS THIS SHEET	NOTES
B1	12	NEW GUIDED EXP BEARINGS
B4	7	CLEAN AND LUBIRCATE EXISTING BEARINGS
J1	1	26' JOINT LENGTH - STRIP SEAL
J1	1	56' JOINT LENGTH - STRIP SEAL
P1	N/A	AT STEEL REPAIR LOCATIONS
R1	N/A	WORK INCLUDED IN SYSTEM REPLACEMENT
S7	1	REPAIR FIELD SPLICE
S8	N/A	INSTALL STUD SHEAR CONNECTORS

LEGEND:

● - B1

▲ - B4

*DENOTES RADIAL DIMESION

NOTES:

1. FOR GENERAL NOTES, SEE SHEET XX TO XX.
2. FOR ADDITIONAL EXISTING FRAMING INFORMATION, SEE ORIGINAL PLANS.
3. IN ORIGINAL PLANS, THESE SPANS WERE DESIGNATED D, E, DF AND EF.
4. EXISTING STRINGERS ARE STRAIGHT AND SPLICED AT EVERY SECOND BAY.

NO.	REVISION	DATE	BY

WEST VIRGINIA DEPARTMENT OF TRANSPORTATION
DIVISION OF HIGHWAYS
ENGINEERING DIVISION

I-64 OVER KANAWHA RIVER
EUGENE A. CARTER MEMORIAL BRIDGE +3
FRAMING PLAN (EB) SPAN 10, SPAN 11, SPAN DF AND SPAN EF

DESIGNED	DATE
MAB	09/25
DRAWN	
SS	09/25
CHECKED	
REVIEWED	

HDR ENGINEERING INC.
CONSULTING ENGINEERS
CHARLESTON, WV
681-341-6100

SHEET OF
BRIDGE NO. 2563.6

pw://pwhdruseas02.intranet.hdr:HDR_US_East_02/Documents/WV_DOT/WVDOT-Eugene_Carter_Bridge_3/6.0_CAD_BIM/6.2_WIP/HDR/6.2.2_Sheet_Files/23_Structure/3.007 Framing Plan (EB) Span 10, Span 11, Span DF and Span EF
$DD-MMM-YYYY HH:MM$
AGRIES

PROJECT NUMBERS		DISTRICT	COUNTY	SHEET NO.	TOTAL
STATE	FEDERAL				
S320-64-57.44 00	NHPP-0064 (497)D	1	KANAWHA		

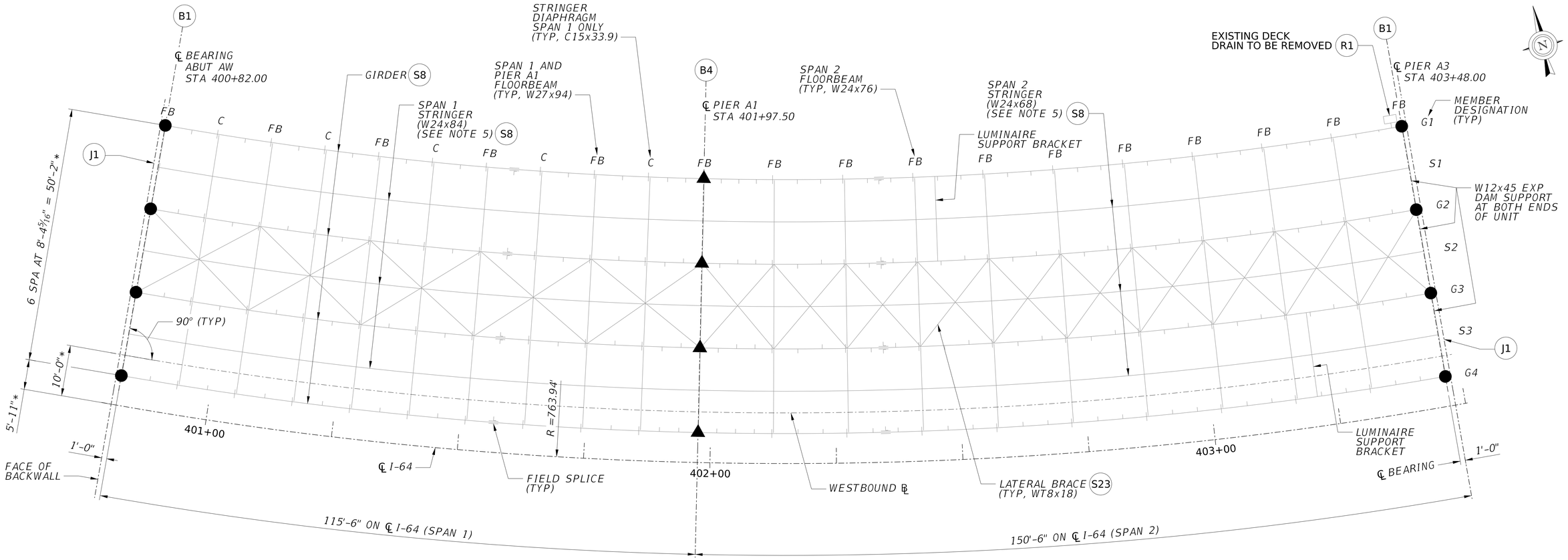

FRAMING PLAN (WB)
SPAN 1 AND SPAN 2

0 2 10
Feet

LEGEND:

● - B1

▲ - B4

*DENOTES RADIAL DIMESION

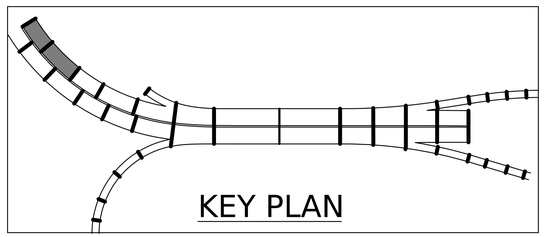

WB SPANS 1 AND 2 REPAIRS		
REPAIR ID	NO. OF REPAIR LOCATIONS THIS SHEET	NOTES
B1	8	NEW GUIDED EXP BEARINGS
B4	4	CLEAN AND LUBIRCATE EXISTING BEARINGS
J1	2	56' JOINT LENGTH EACH - STRIP SEAL
P1	N/A	AT STEEL REPAIR LOCATIONS
R1	N/A	WORK INCLUDED IN SYSTEM REPLACEMENT
S8	N/A	STUDS ON GIRDERS AND STRINGERS - SEE DETAILS
S23	30	REMOVE BRACING MEMBER

NOTES:

1. FOR GENERAL NOTES, SEE SHEETS XX THRU XX.
2. FOR ADDITIONAL EXISTING FRAMING INFORMATION, SEE ORIGINAL PLANS.
3. IN ORIGINAL PLANS, THESE SPANS WERE DESIGNATED A1 AND A3.
4. SPAN 1 EXISTING STRINGERS ARE STRAIGHT AND SPLICED AT EVERY FLOORBEAM. SPAN 2 EXISTING STRINGERS ARE STRAIGHT AND SPLICED AT EVERY SECOND FLOORBEAM.
5. STRINGERS IN SPAN 2 MUST BE TEMPORARILY BRACED LATERALLY WHILE NEW DECK IS PLACED. PROVIDE TEMPORARY BRACING AT A SPACING NOT TO EXCEED XX FEET. REMOVE BRACING AFTER DECK HAS CURED.

NO.	REVISION	DATE	BY

WEST VIRGINIA DEPARTMENT OF TRANSPORTATION
DIVISION OF HIGHWAYS
ENGINEERING DIVISION

I-64 OVER KANAWHA RIVER
EUGENE A. CARTER MEMORIAL BRIDGE +3
FRAMING PLAN (WB)
SPAN 1 AND SPAN 2

DESIGNED	MAB
DATE	09/25
DRAWN	SS
DATE	09/25
CHECKED	
REVIEWED	

HDR ENGINEERING INC.
CONSULTING ENGINEERS
CHARLESTON, WV
681-341-6100

SHEET
OF
BRIDGE NO.
2563.6

pw://pwhdrusea02.intranet.hdr:HDR_US_East_02/Documents/WV_DOT/WVDOT-Eugene_Carter_Bridge_3/6.0_CAD_BIM/6.2_WIP/HDR/6.2.2_Sheet_Files/23_Structure/3.008 Framing Plan (WB) Span 1 and Span 2
$DD-MMM-YYYY HH:MM$
AGRIES

PROJECT NUMBERS		DISTRICT	COUNTY	SHEET NO.	TOTAL
STATE	FEDERAL				
S320-64-57.44 00	NHPP-0064 (497)D	1	KANAWHA		

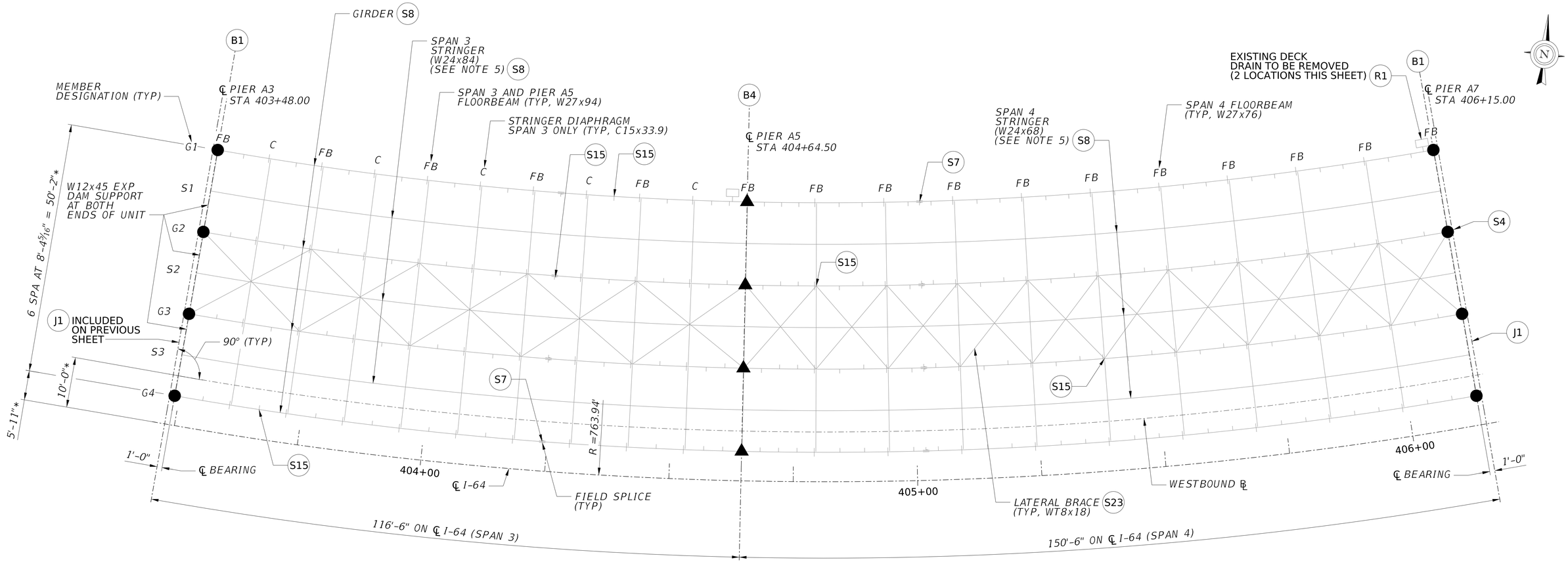

FRAMING PLAN (WB)
SPAN 3 AND SPAN 4

0 2 10
Feet

LEGEND:

● - B1

▲ - B4

*DENOTES RADIAL DIMESION

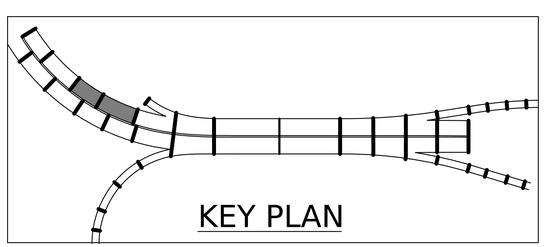

WB SPANS 3 AND 4 REPAIRS		
REPAIR ID	NO. OF REPAIR LOCATIONS THIS SHEET	NOTES
B1	8	NEW GUIDED EXP BEARINGS
B4	4	CLEAN AND LUBIRCATE EXISTING BEARINGS
J1	1	56' JOINT LENGTH - STRIP SEAL
P1	N/A	AT STEEL REPAIR LOCATIONS
R1	N/A	WORK INCLUDED IN SYSTEM REPLACEMENT
S4	1	
S7	2	
S8	N/A	STUDS ON GIRDERS AND STRINGERS - SEE DETAILS
S15	5	
S23	30	REMOVE BRACING MEMBER

NOTES:

1. FOR GENERAL NOTES, SEE SHEETS XX THRU XX.
2. FOR ADDITIONAL EXISTING FRAMING INFORMATION, SEE ORIGINAL PLANS.
3. IN ORIGINAL PLANS, THESE SPANS WERE DESIGNATED A5 AND A7.
4. SPAN 3 EXISTING STRINGERS ARE STRAIGHT AND SPLICED AT EVERY FLOORBEAM. SPAN 4 EXISTING STRINGERS ARE STRAIGHT AND SPLICED AT EVERY SECOND FLOORBEAM.
5. STRINGERS IN SPAN 4 MUST BE TEMPORARILY BRACED LATERALLY WHILE NEW DECK IS PLACED. PROVIDE TEMPORARY BRACING AT A SPACING NOT TO EXCEED XX FEET. REMOVE BRACING AFTER DECK HAS CURED.

NO.	REVISION	DATE	BY

WEST VIRGINIA DEPARTMENT OF TRANSPORTATION
DIVISION OF HIGHWAYS
ENGINEERING DIVISION

I-64 OVER KANAWHA RIVER
EUGENE A. CARTER MEMORIAL BRIDGE +3
FRAMING PLAN (WB)
SPAN 3 AND SPAN 4

DESIGNED	DATE
MAB	09/25
DRAWN	
SS	09/25
CHECKED	
REVIEWED	

HDR ENGINEERING INC.
CONSULTING ENGINEERS
CHARLESTON, WV
681-341-6100

SHEET OF
BRIDGE NO. 2563.6

pw://pwhdrusea02.intranet.hdr:HDR_US_East_02/Documents/WV_DOT/WVDOT-Eugene_Carter_Bridge_3/6.0_CAD_BIM/6.2_WIP/HDR/6.2.2_Sheet_Files/23_Structure/3.009 Framing Plan (WB) Span 3 and Span 4
$DD-MMM-YYYY HH:MM$
AGRIES

PROJECT NUMBERS		DISTRICT	COUNTY	SHEET NO.	TOTAL
STATE	FEDERAL				
S320-64-57.44 00	NHPP-0064 (497)D	1	KANAWHA		

WB SPANS 5, 6 AND CA REPAIRS		
REPAIR ID	NO. OF REPAIR LOCATIONS THIS SHEET	NOTES
B1	11	NEW GUIDED EXP BEARINGS
B4	8	CLEAN AND LUBIRCATE EXISTING BEARINGS
B5	1	STRAIGHTEN 4 ANCHOR BOLTS AND TIGHTEN 1 NUT
J2	1	62' JOINT LENGTH - MODULAR DAM
P1	N/A	AT STEEL REPAIR LOCATIONS
R1	N/A	WORK INCLUDED IN SYSTEM REPLACEMENT
S4	1	
S5	2	
S7	1	
S8	N/A	STUDS ON GIRDERS AND STRINGERS - SEE DETAILS
S23	53	REMOVE BRACING MEMBER

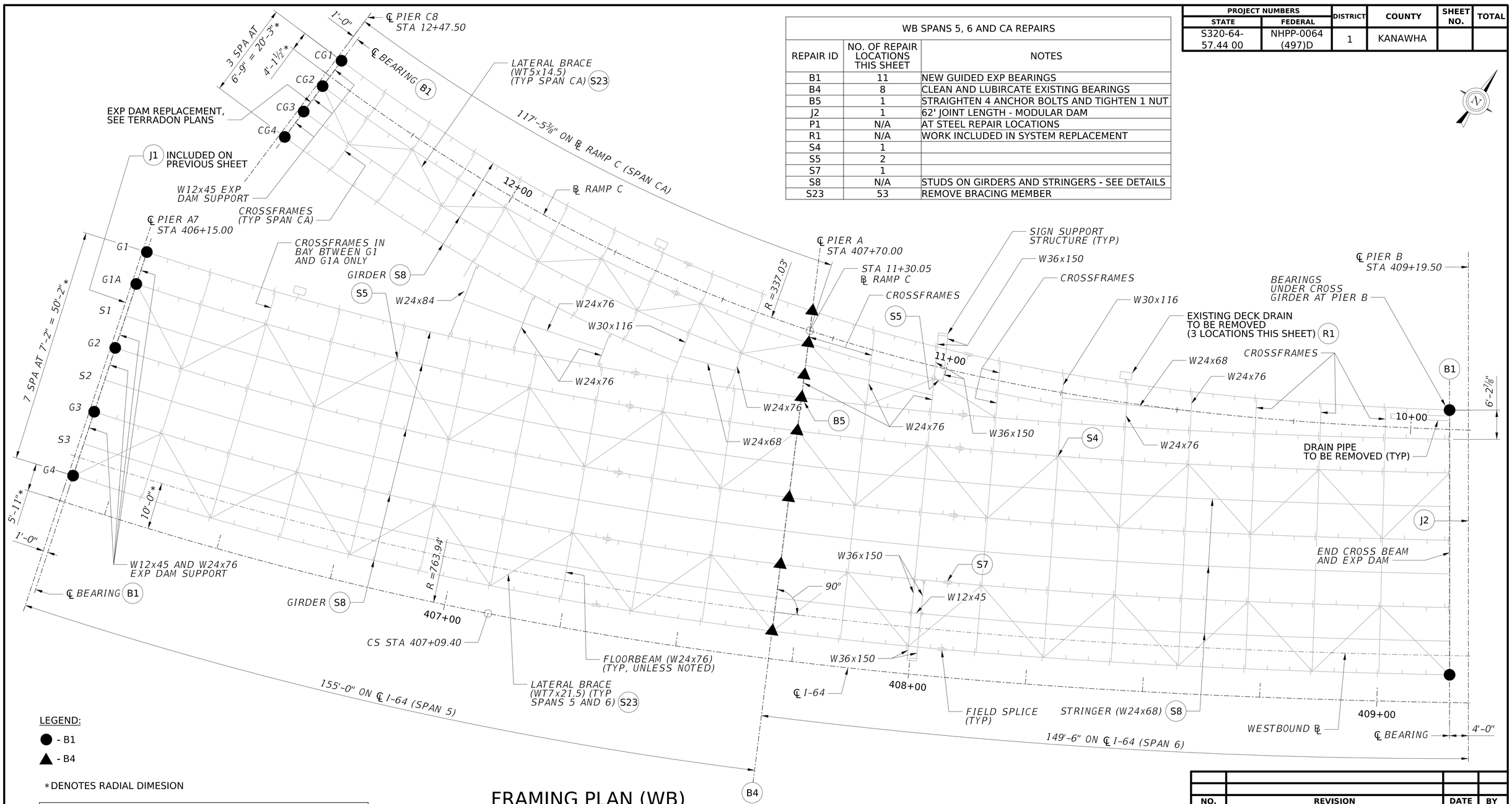

LEGEND:

● - B1

▲ - B4

*DENOTES RADIAL DIMESION

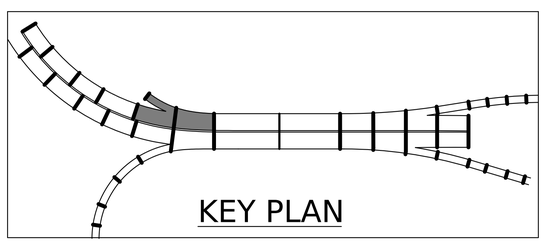

FRAMING PLAN (WB)
SPAN 5, SPAN 6 AND SPAN CA

0 2 10
Feet

NOTES:

1. FOR GENERAL NOTES, SEE SHEETS XX THRU XX.
2. FOR ADDITIONAL EXISTING FRAMING INFORMATION, SEE ORIGINAL PLANS.
3. IN ORIGINAL PLANS, THESE SPANS WERE DESIGNATED A9, AB WEST AND CA.
4. EXISTING STRINGERS ARE STRAIGHT AND SPLICED AT EVERY SECOND FLOORBEAM.
5. STRINGERS MUST BE TEMPORARILY BRACED LATERALLY WHILE NEW DECK IS PLACED. PROVIDE TEMPORARY BRACING AT A SPACING NOT TO EXCEED XX FEET. REMOVE BRACING AFTER DECK HAS CURED.

NO.	REVISION	DATE	BY

WEST VIRGINIA DEPARTMENT OF TRANSPORTATION
DIVISION OF HIGHWAYS
ENGINEERING DIVISION

I-64 OVER KANAWHA RIVER
EUGENE A. CARTER MEMORIAL BRIDGE +3
FRAMING PLAN (WB)
SPAN 5, SPAN 6 AND SPAN CA

DESIGNED	DATE
MAB	09/25
DRAWN	
SS	09/25
CHECKED	
REVIEWED	

HDR ENGINEERING INC.
CONSULTING ENGINEERS
CHARLESTON, WV
681-341-6100

SHEET
OF
BRIDGE NO.
2563.6

pw://pwhdruseas02.intranet.hdr:HDR_US_East_02/Documents/WV_DOT/WVDOT-Eugene_Carter_Bridge_3/6.0_CAD_BIM/6.2_WIP/HDR/6.2.2_Sheet_Files/23_Structure/3.010 Framing Plan (WB) Span 5, Span 6 and Span CA
$DD-MMM-YYYY HH:MM$
AGRIES

PROJECT NUMBERS		DISTRICT	COUNTY	SHEET NO.	TOTAL
STATE	FEDERAL				
S320-64-57.44 00	NHPP-0064 (497)D	1	KANAWHA		

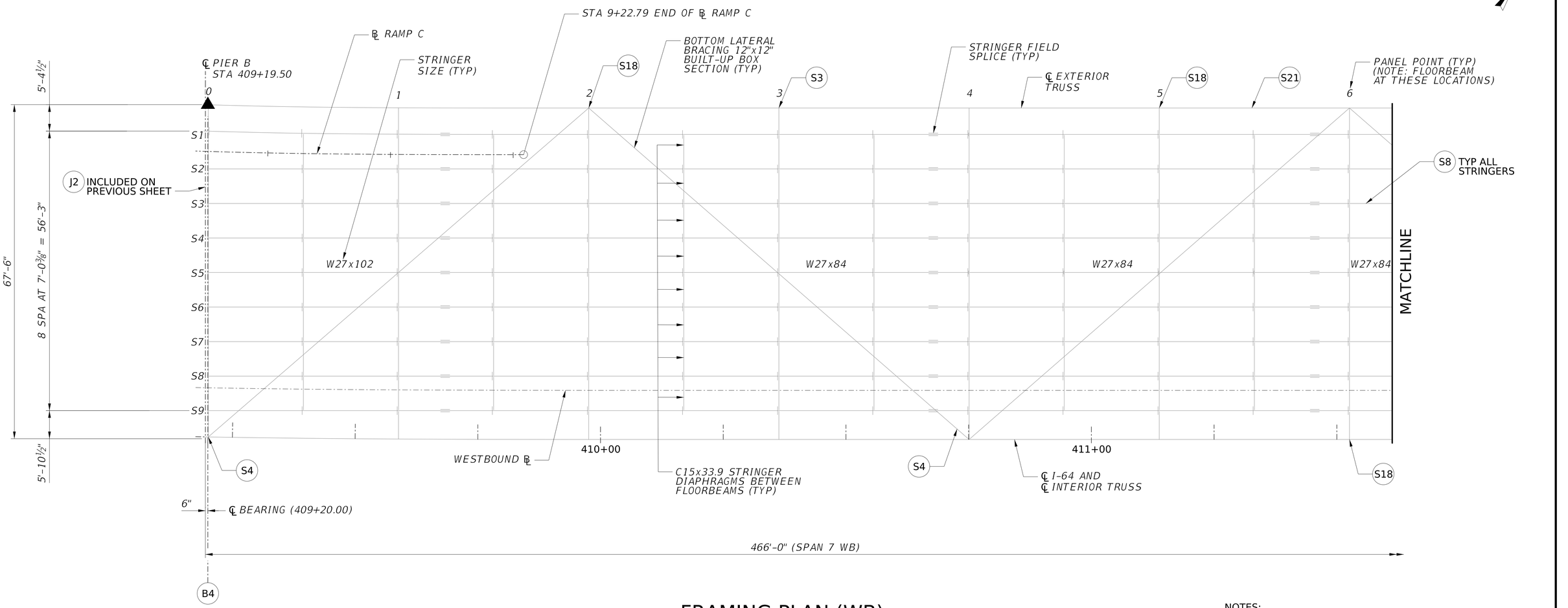

FRAMING PLAN (WB)
SPAN 7

0 2 10
Feet

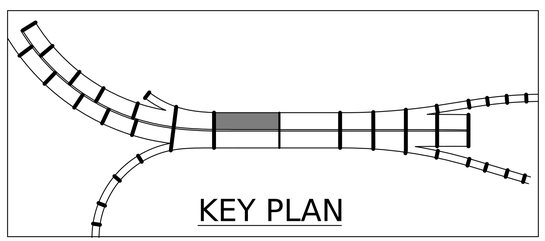

LEGEND:

- ● - B1
- ■ - B2
- ▲ - B4

WB SPAN 7 REPAIRS		
REPAIR ID	NO. OF REPAIR LOCATIONS THIS SHEET	NOTES
B4	1	CLEAN AND LUBIRCATE MAIN TRUSS BEARINGS
P1	N/A	AT STEEL REPAIR LOCATIONS
S3	1	
S4	2	
S8	N/A	STUDS ON STRINGERS - SEE DETAILS
S18	3	PLUS ANY OTHERS FOUND
S21	1	

NOTES:

1. FOR GENERAL NOTES, SEE SHEETS XX THRU XX.
2. FOR ADDITIONAL EXISTING FRAMING INFORMATION, SEE ORIGINAL PLANS.
3. IN ORIGINAL PLANS, THIS SPAN WAS DESIGNATED SPAN A.

NO.	REVISION	DATE	BY

WEST VIRGINIA DEPARTMENT OF TRANSPORTATION
DIVISION OF HIGHWAYS
ENGINEERING DIVISION

I-64 OVER KANAWHA RIVER
EUGENE A. CARTER MEMORIAL BRIDGE +3
FRAMING PLAN (WB)
SPAN 7 (1 OF 2)

DESIGNED	MAB
DATE	09/25
DRAWN	SS
DATE	09/25
CHECKED	
REVIEWED	

HDR ENGINEERING INC.
CONSULTING ENGINEERS
CHARLESTON, WV
681-341-6100

SHEET
OF
BRIDGE NO.
2563.6

AGRIES $DD-MMM-YYYY HH:MM$ pw://pwhdruseas02.intranet.hdr:HDR_US_East_02/Documents/WV_DOT/WVDOT-Eugene_Carter_Bridge_3/6.0_CAD_BIM/6.2_WIP/HDR/6.2.2_Sheet_Files/23_Structure/3.011 Framing Plan (WB) Span 7 (1 of 2)

PROJECT NUMBERS		DISTRICT	COUNTY	SHEET NO.	TOTAL
STATE	FEDERAL				
S320-64-57.44 00	NHPP-0064 (497)D	1	KANAWHA		

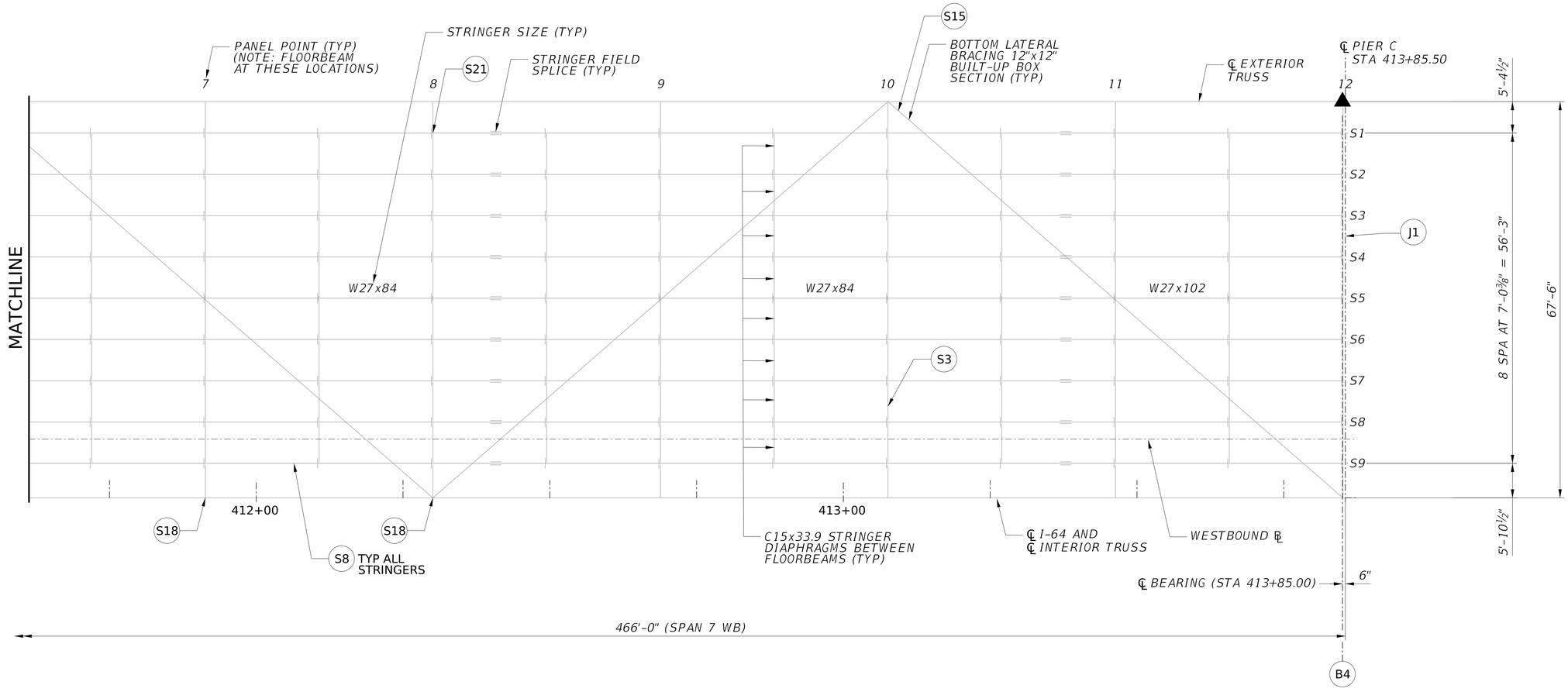

FRAMING PLAN (WB)
SPAN 7

0 2 10
Feet

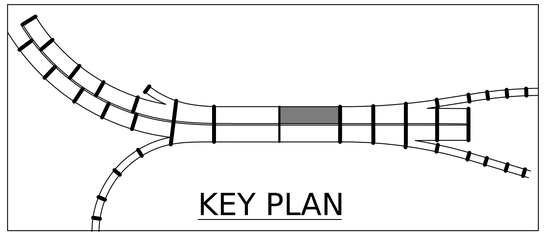

LEGEND:

- ● - B1
- ■ - B2
- ▲ - B4

WB SPAN 7 REPAIRS		
REPAIR ID	NO. OF REPAIR LOCATIONS THIS SHEET	NOTES
B4	1	CLEAN AND LUBIRCATE MAIN TRUSS BEARINGS
J1	1	62' JOINT LENGTH - STRIP SEAL
P1	N/A	AT STEEL REPAIR LOCATIONS
S3	1	
S8	N/A	STUDS ON STRINGERS - SEE DETAILS
S15	1	
S18	2	PLUS ANY OTHERS FOUND
S21	1	

NOTES:

1. FOR GENERAL NOTES, SEE SHEETS XX THRU XX.
2. FOR ADDITIONAL EXISTING FRAMING INFORMATION, SEE ORIGINAL PLANS.
3. IN ORIGINAL PLANS, THIS SPAN WAS DESIGNATED SPAN A.

NO.	REVISION	DATE	BY

WEST VIRGINIA DEPARTMENT OF TRANSPORTATION
DIVISION OF HIGHWAYS
ENGINEERING DIVISION

I-64 OVER KANAWHA RIVER
EUGENE A. CARTER MEMORIAL BRIDGE +3
FRAMING PLAN (WB)
SPAN 7 (2 OF 2)

DESIGNED	MAB	09/25
DRAWN	SS	09/25
CHECKED		
REVIEWED		

HDR ENGINEERING INC.
CONSULTING ENGINEERS
CHARLESTON, WV
681-341-6100

SHEET
OF
BRIDGE NO.
2563.6

pw://pwhdruseas02.intranet.hdr:HDR_US_East_02/Documents/WV_DOT/WVDOT-Eugene_Carter_Bridge_3/6.0_CAD_BIM/6.2_WIP/HDR/6.2.2_Sheet_Files/23_Structure/3.012 Framing Plan (WB) Span 7 (2 of 2).dgn
$DD-MMM-YYYY HH:MM$
AGRIES

PROJECT NUMBERS		DISTRICT	COUNTY	SHEET NO.	TOTAL
STATE	FEDERAL				
S320-64-57.44 00	NHPP-0064 (497)D	1	KANAWHA		

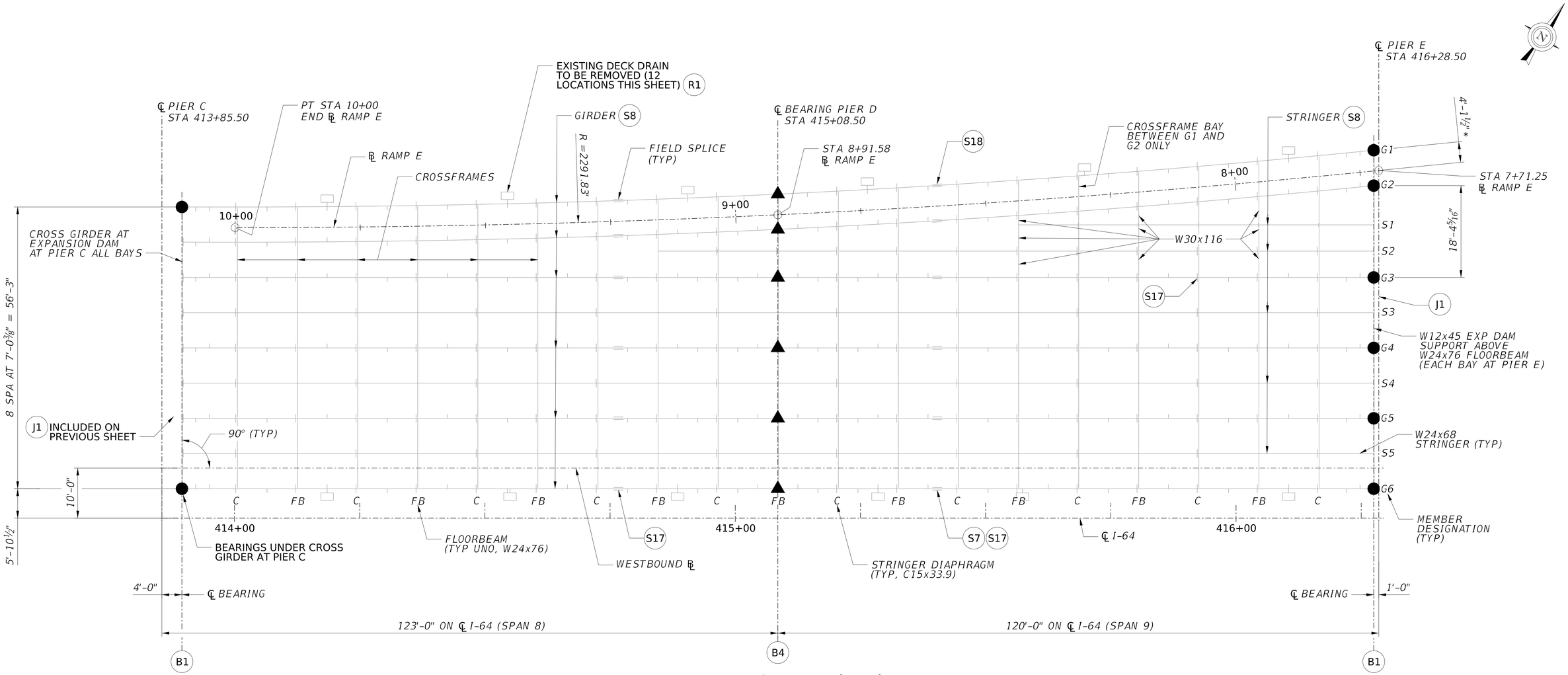

FRAMING PLAN (WB)
SPAN 8 AND SPAN 9

0 2 10
Feet

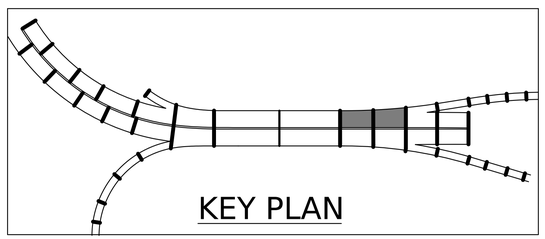

WB SPANS 8 AND 9 REPAIRS		
REPAIR ID	NO. OF REPAIR LOCATIONS THIS SHEET	NOTES
B1	8	NEW GUIDED EXP BEARINGS
B4	6	CLEAN AND LUBIRCATE EXISTING BEARINGS
J1	1	78' JOINT LENGTH - STRIP SEAL
P1	N/A	AT STEEL REPAIR LOCATIONS
R1	N/A	WORK INCLUDED IN SYSTEM REPLACEMENT
S7	1	REPAIR FIELD SPLICE
S8	N/A	INSTALL STUD SHEAR CONNECTORS
S17	3	REPLACE BOLTS
S18	1	REMOVE TACK WELD

LEGEND:

● - B1

▲ - B4

*DENOTES RADIAL DIMESION

NOTES:

1. FOR GENERAL NOTES, SEE SHEET XX TO XX.
2. FOR ADDITIONAL EXISTING FRAMING INFORMATION, SEE ORIGINAL PLANS.
3. IN ORIGINAL PLANS, THESE SPANS WERE DESIGNATED B AND C.
4. EXISTING STRINGERS ARE STRAIGHT AND SPLICED AT EVERY SECOND BAY.

NO.	REVISION	DATE	BY

WEST VIRGINIA DEPARTMENT OF TRANSPORTATION
DIVISION OF HIGHWAYS
ENGINEERING DIVISION

I-64 OVER KANAWHA RIVER
EUGENE A. CARTER MEMORIAL BRIDGE +3
FRAMING PLAN (WB)
SPAN 8 AND SPAN 9

DESIGNED	MAB
DATE	09/25
DRAWN	SS
DATE	09/25
CHECKED	
REVIEWED	

HDR ENGINEERING INC.
CONSULTING ENGINEERS
CHARLESTON, WV
681-341-6100

SHEET
OF
BRIDGE NO.
2563.6

pw://pwhdruseas02.intranet.hdr:HDR_US_East_02/Documents/WV_DOT/WVDOT-Eugene_Carter_Bridge_3/6.0_CAD_BIM/6.2_WIP/HDR/6.2.2_Sheet_Files/23_Structure/3.013 Framing Plan (WB) Span 8 and Span 9
$DD-MMM-YYYY HH:MM$
AGRIES

PROJECT NUMBERS		DISTRICT	COUNTY	SHEET NO.	TOTAL
STATE	FEDERAL				
S320-64-57.44 00	NHPP-0064 (497)D	1	KANAWHA		

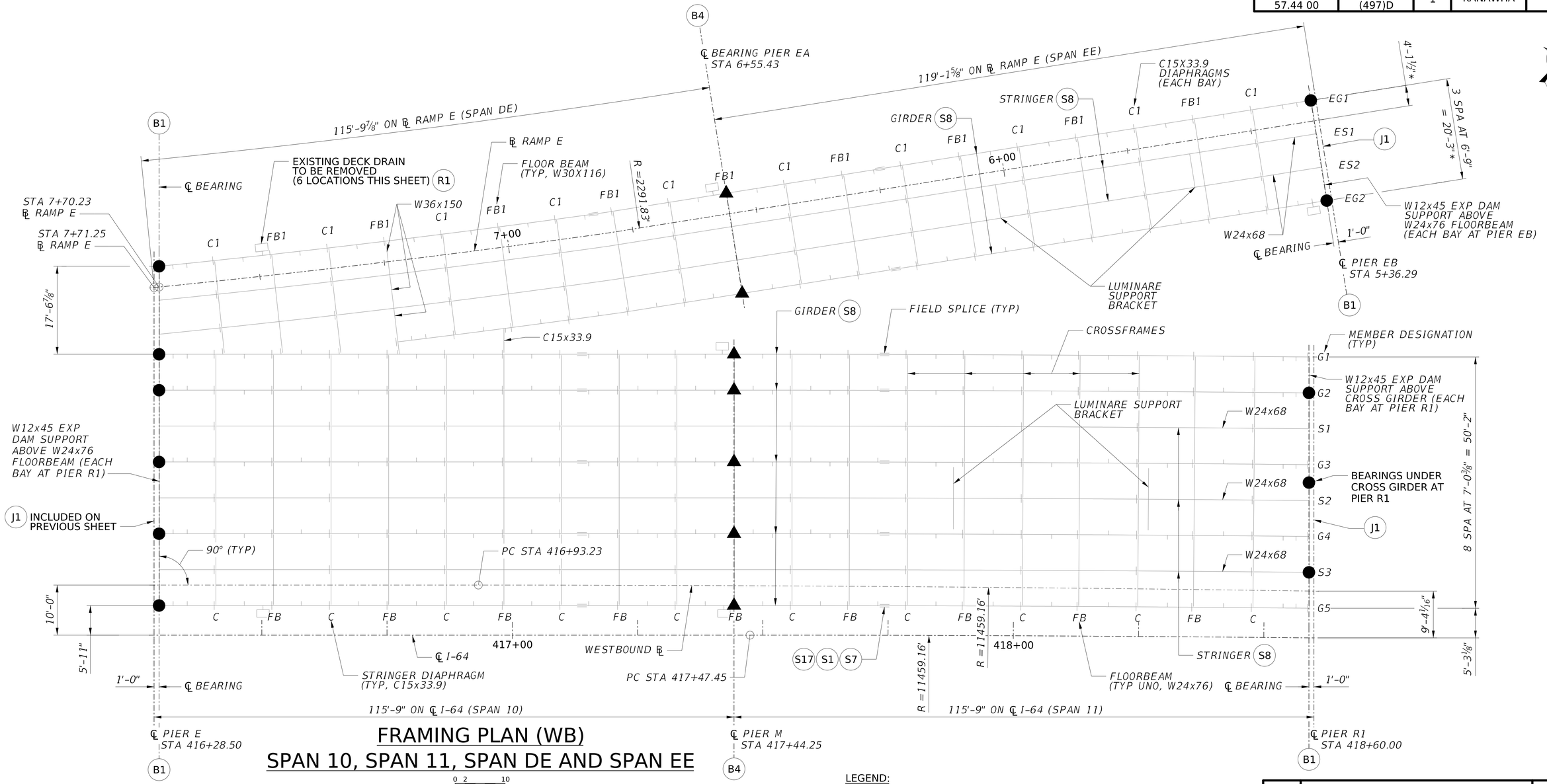

FRAMING PLAN (WB)
SPAN 10, SPAN 11, SPAN DE AND SPAN EE

0 2 10
Feet

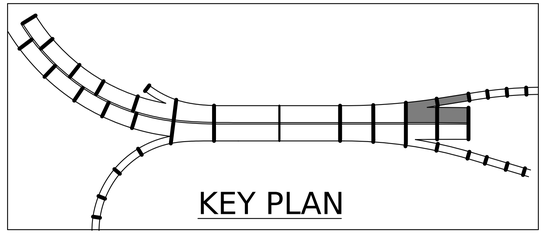

WB SPANS 10, 11, DE AND EE REPAIRS		
REPAIR ID	NO. OF REPAIR LOCATIONS THIS SHEET	NOTES
B1	11	NEW GUIDED EXP BEARINGS
B4	7	CLEAN AND LUBRICATE EXISTING BEARINGS
J1	1	26' JOINT LENGTH - STRIP SEAL
J1	1	56' JOINT LENGTH - STRIP SEAL
P1	N/A	AT STEEL REPAIR LOCATIONS
R1	N/A	WORK INCLUDED IN SYSTEM REPLACEMENT
S1	1	REPAIR STEEL GIRDER LOCAL DETERIORATION
S7	1	REPAIR FIELD SPLICE
S8	N/A	INSTALL STUD SHEAR CONNECTORS
S17	1	REPLACE BOLTS

LEGEND:

● - B1

▲ - B4

*DENOTES RADIAL DIMESION

NOTES:

1. FOR GENERAL NOTES, SEE SHEET XX TO XX.
2. FOR ADDITIONAL EXISTING FRAMING INFORMATION, SEE ORIGINAL PLANS.
3. IN ORIGINAL PLANS, THESE SPANS WERE DESIGNATED D, E, DE AND EE.
4. EXISTING STRINGERS ARE STRAIGHT AND SPLICED AT EVERY SECOND BAY.

NO.	REVISION	DATE	BY

WEST VIRGINIA DEPARTMENT OF TRANSPORTATION
DIVISION OF HIGHWAYS
ENGINEERING DIVISION

I-64 OVER KANAWHA RIVER
EUGENE A. CARTER MEMORIAL BRIDGE +3
FRAMING PLAN (WB) SPAN 10, SPAN 11, SPAN DE AND SPAN EE

DESIGNED MAB	DATE 09/25	HDR ENGINEERING INC. CONSULTING ENGINEERS CHARLESTON, WV 681-341-6100
DRAWN SS	09/25	SHEET OF
CHECKED		BRIDGE NO. 2563.6
REVIEWED		

pw://pwhdruseas02.intranet.hdr:HDR_US_East_02/Documents/WV_DOT/WVDOT-Eugene_Carter_Bridge_3/6.0_CAD_BIM/6.2_WIP/HDR/6.2.2_Sheet_Files/23_Structure/3.014 Framing Plan (WB) Span 10, Span 11, Span DE and Span EE
$DD-MMM-YYYY HH:MM$
AGRIES

PROJECT NUMBERS		DISTRICT	COUNTY	SHEET NO.	TOTAL
STATE	FEDERAL				
S320-64-57.44 00	NHPP-0064 (497)D	1	KANAWHA		

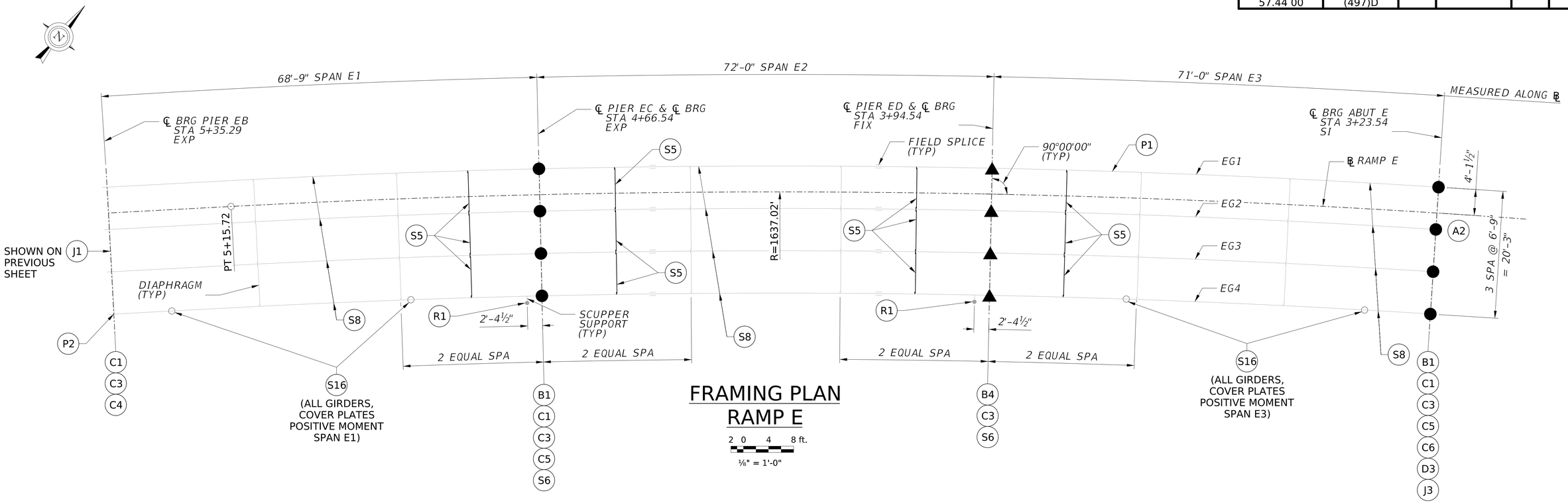

FRAMING PLAN
RAMP E

2 0 4 8 ft.

⅛" = 1'-0"

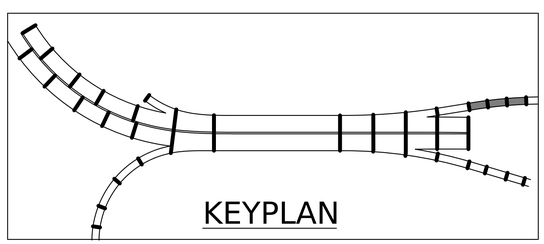

SPANS E1 - E3 REPAIRS		
REPAIR ID	NO. OF REPAIR LOCATIONS THIS SHEET	NOTES
A2	1	APPROACH SLAB REPLACEMENT
B1	8	NEW GUIDED EXP BEARINGS
B4	4	CLEAN AND LUBRICATE EXISTING BEARINGS
C1	3	PATCHING CONCRETE STRUCTURES
C3	4	CONCRETE PROTECTIVE COATING
C4	1	EPOXY RESIN PROTECTIVE COATING
C5	8	CONCRETE PEDESTAL MODIFICATIONS
C6	1	MODIFICATIONS FOR SEMI-INTEGRAL ABUTMENT CONVERSION
D3	1	SEMI-INTEGRAL ABUTMENT DIAPHRAGM
J3	1	REMOVE EXISTING JOINT IN CONJUNCTION WITH SEMI-INTEGRAL ABUTMENT CONVERSION
P1	N/A	AT STEEL REPAIR LOCATIONS
P2	1	PACK RUST REMOVAL - EG4 BRG
R1	2	REMOVE AND REPLACE SCUPPER SUPPORTS
S5	12	NEW DIAPHRAGM
S6	8	STRENGTHEN PIER BRG STIFF
S8	N/A	STUDS ON GIRDERS - SEE DETAILS
S16	16	BOTTOM FLANGE COVER PLATE FATIGUE RETROFIT

LEGEND:

● - B1

■ - B2

▲ - B4

NOTES:

1. FOR GENERAL NOTES, SEE SHEETS XX THRU XX.
2. FOR ADDITIONAL EXISTING FRAMING INFORMATION, SEE ORIGINAL PLANS.

NO.	REVISION	DATE	BY

WEST VIRGINIA DEPARTMENT OF TRANSPORTATION
DIVISION OF HIGHWAYS
ENGINEERING DIVISION

I-64 OVER KANAWHA RIVER
EUGENE A. CARTER MEMORIAL BRIDGE +3

FRAMING PLAN - RAMP E
SPANS E1 - E3

DESIGNED	MLH
DATE	12/25
DRAWN	DJC
DATE	12/25
CHECKED	
REVIEWED	

Mead & Hunt

MEAD & HUNT INC.
CONSULTING ENGINEERS
CHARLESTON, WV
304-345-6712

SHEET OF

BRIDGE NO. 2563.6

1420djc $DD-MMM-YYYY HH:MM$ X:\32416000\251911.01\TECH\Structures\Ramp E\sheets\str_frm_001_Ramp E_Eugene Carter Memorial Bridge.dgn

PROJECT NUMBERS		DISTRICT	COUNTY	SHEET NO.	TOTAL
STATE	FEDERAL				
S320-64-57.44 00	NHPP-0064 (497)D	1	KANAWHA		

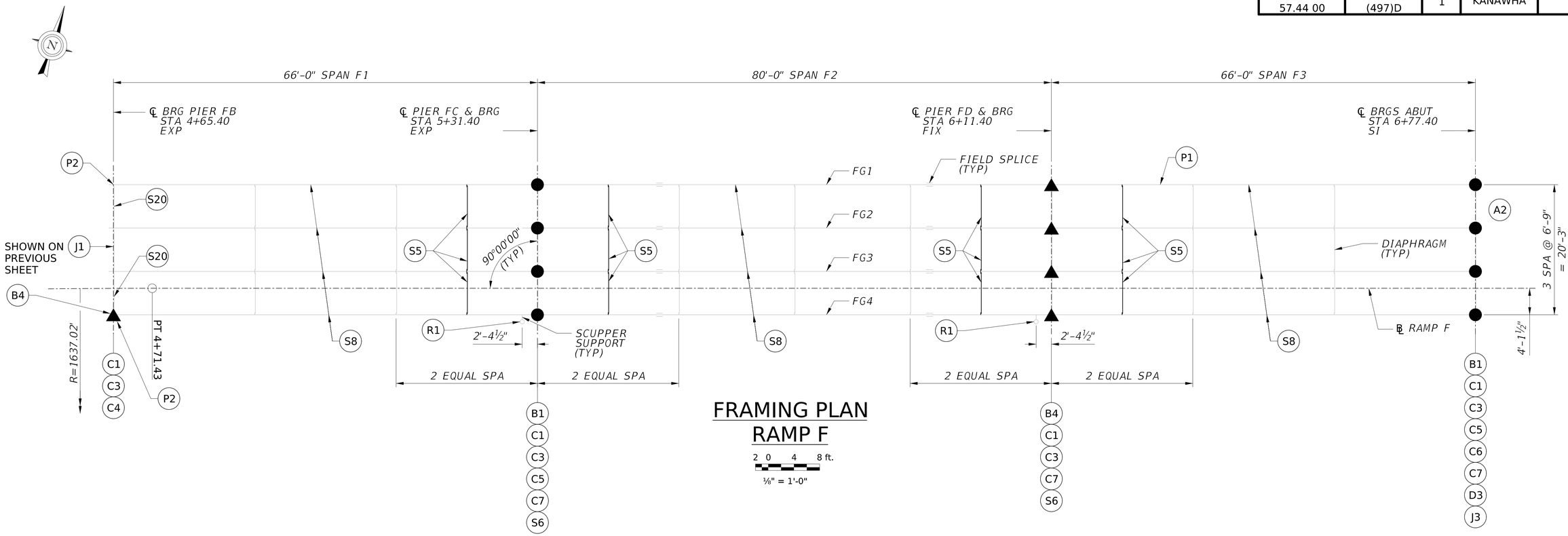

FRAMING PLAN
RAMP F

2 0 4 8 ft.

⅛" = 1'-0"

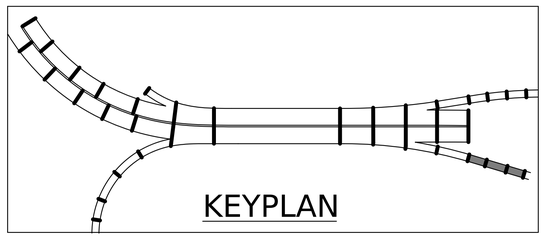

SPANS F1 - F3 REPAIRS		
REPAIR ID	NO. OF REPAIR LOCATIONS THIS SHEET	NOTES
A2	1	APPROACH SLAB REPLACEMENT
B1	8	NEW GUIDED EXP BEARINGS
B4	5	CLEAN AND LUBRICATE EXISTING BEARINGS
C1	4	PATCHING CONCRETE STRUCTURES
C3	4	CONCRETE PROTECTIVE COATING
C4	1	EPOXY RESIN PROTECTIVE COATING
C5	8	CONCRETE PEDESTAL MODIFICATIONS
C6	1	MODIFICATIONS FOR SEMI-INTEGRAL ABUTMENT CONVERSION
C7	3	REMOVE DEBRIS FROM SUBSTRUCTURE UNITS
D3	1	SEMI-INTEGRAL ABUTMENT DIAPHRAGM
J3	1	REMOVE EXISTING JOINT IN CONJUNCTION WITH SEMI-INTEGRAL ABUTMENT CONVERSION
P1	N/A	AT STEEL REPAIR LOCATIONS
P2	3	PACK RUST REMOVAL - CROSS GIRDER BRGS AND FG4 BRG
R1	2	REMOVE AND REPLACE SCUPPER SUPPORTS
S5	12	NEW DIAPHRAGM
S6	8	STRENGTHEN PIER BRG STIFF
S8	N/A	STUDS ON GIRDERS - SEE DETAILS
S20	2	CROSS GIRDER REPAIR

LEGEND:

- ● - B1
- ■ - B2
- ▲ - B4

NOTES:

1. FOR GENERAL NOTES, SEE SHEETS XX THRU XX.
2. FOR ADDITIONAL EXISTING FRAMING INFORMATION, SEE ORIGINAL PLANS.

NO.	REVISION	DATE	BY

WEST VIRGINIA DEPARTMENT OF TRANSPORTATION
DIVISION OF HIGHWAYS
ENGINEERING DIVISION

I-64 OVER KANAWHA RIVER
EUGENE A. CARTER MEMORIAL BRIDGE +3

FRAMING PLAN - RAMP F
SPANS F1 - F3

DESIGNED	DATE
MLH	12/25
DRAWN	
DJC	12/25
CHECKED	
REVIEWED	

Mead & Hunt

MEAD & HUNT INC.
CONSULTING ENGINEERS
CHARLESTON, WV
304-345-6712

SHEET OF

BRIDGE NO. 2563.6

1420djc $DD-MMM-YYYY HH:MM$ X:\3241600\251911.01\TECH\Structures\Ramp F\sheets\str_frm_001_Ramp F_Eugene Carter Memorial Bridge.dgn

PROJECT NUMBERS		DISTRICT	COUNTY	SHEET NO.	TOTAL
STATE	FEDERAL				
S320-64-57.44 00	NHPP-0064 (497)D	1	KANAWHA		

℄ PIER B
STA 409+19.50
ELEV 657.69

466'-0" (SPAN 7 WB)

465'-0" ℄ BEARING TO ℄ BEARING

℄ PIER C
STA 413+85.50
ELEV 643.52

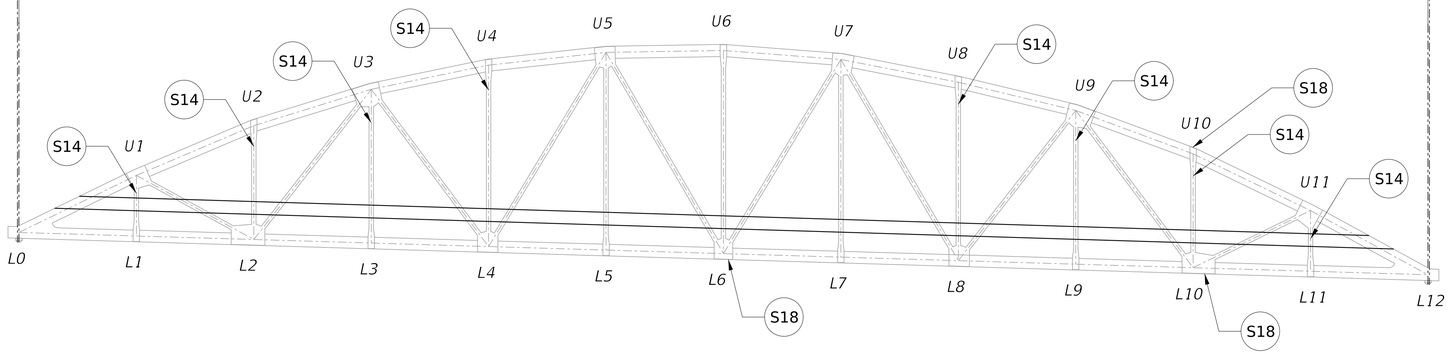

NORTH EXTERIOR TRUSS

(LOOKING NORTH)

SPAN 7 TRUSS SUPERSTRUCTURE REPAIRS		
REPAIR ID	NO. OF REPAIR LOCATIONS THIS SHEET	NOTES

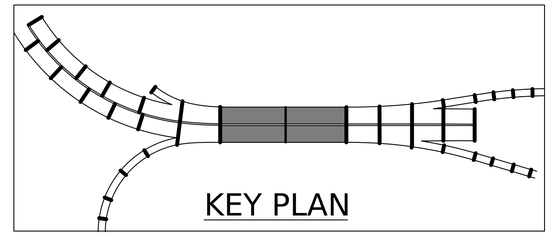

℄ PIER B
STA 409+19.50
ELEV 657.69

466'-0" (SPAN 7 WB)

465'-0" ℄ BEARING TO ℄ BEARING

℄ PIER C
STA 413+85.50
ELEV 643.52

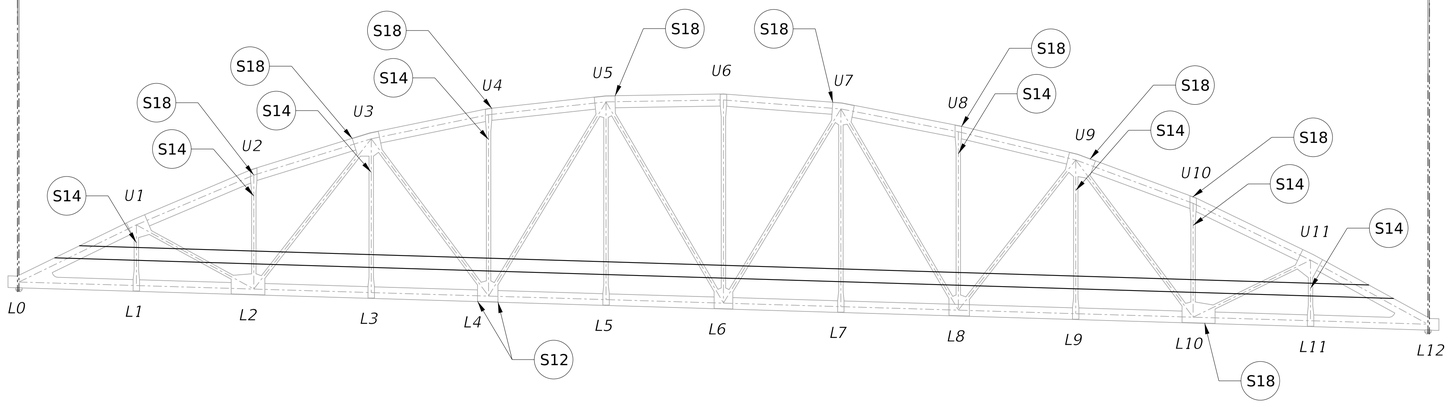

SOUTH EXTERIOR TRUSS

(LOOKING NORTH)

NOTES:

1. FOR GENERAL NOTES, SEE SHEETS XX THRU XX.

NO.	REVISION	DATE	BY

WEST VIRGINIA DEPARTMENT OF TRANSPORTATION
DIVISION OF HIGHWAYS
ENGINEERING DIVISION

I-64 OVER KANAWHA RIVER
EUGENE A. CARTER MEMORIAL BRIDGE +3

TRUSS FRAMING (1 OF 3)

DESIGNED	KMO	DATE	10/25
DRAWN	ARG		10/25
CHECKED			
REVIEWED			

NOT TO SCALE

HDR ENGINEERING INC.
CONSULTING ENGINEERS
CHARLESTON, WV
681-341-6100

SHEET OF

BRIDGE NO. 2563.6

AGRIES $DD-MMM-YYYY HH:MM$ pw://pwhdruseas02.intranet.hdr:HDR_US_East_02/Documents/WV_DOT/WVDOT-Eugene_Carter_Bridge_3/6.0_CAD_BIM/6.2_WIP/HDR/6.2.2_Sheet_Files/23_Structure/3.015 Truss Framing (1 of 3)

PROJECT NUMBERS		DISTRICT	COUNTY	SHEET NO.	TOTAL
STATE	FEDERAL				
S320-64-57.44 00	NHPP-0064 (497)D	1	KANAWHA		

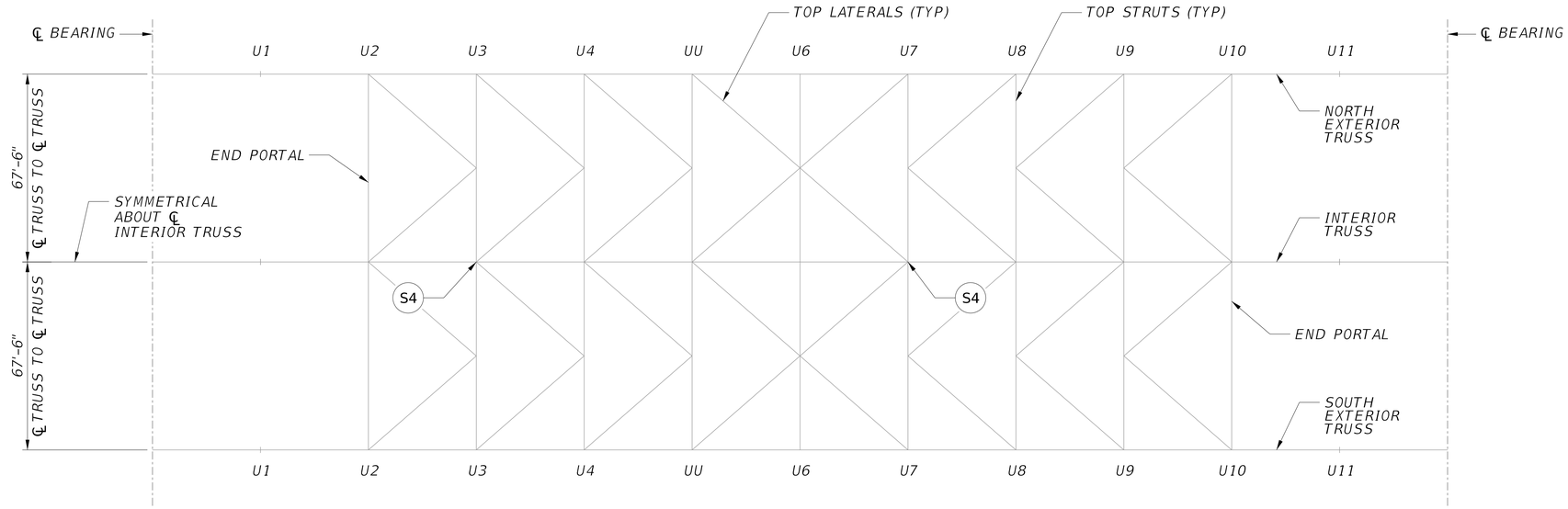

TOP LATERAL BRACING

SPAN 7 TRUSS SUPERSTRUCTURE REPAIRS		
REPAIR ID	NO. OF REPAIR LOCATIONS THIS SHEET	NOTES

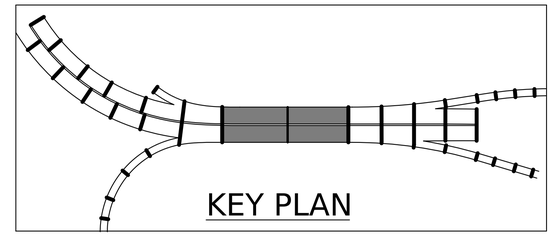

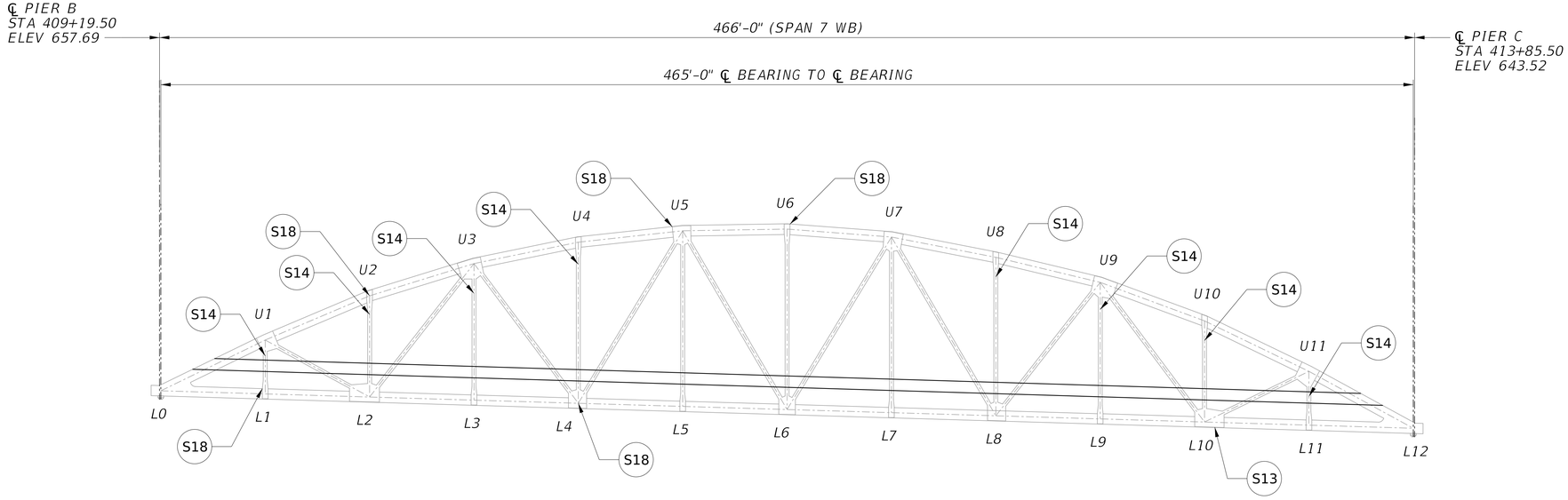

INTERIOR TRUSS

(LOOKING NORTH)

NOT TO SCALE

NOTES:

1. FOR GENERAL NOTES, SEE SHEETS XX THRU XX.

NO.	REVISION	DATE	BY

WEST VIRGINIA DEPARTMENT OF TRANSPORTATION
DIVISION OF HIGHWAYS
ENGINEERING DIVISION

I-64 OVER KANAWHA RIVER
EUGENE A. CARTER MEMORIAL BRIDGE +3

TRUSS FRAMING (2 OF 3)

DESIGNED	DATE
KMO	10/25
DRAWN	
ARG	10/25
CHECKED	
REVIEWED	

HDR ENGINEERING INC.
CONSULTING ENGINEERS
CHARLESTON, WV
681-341-6100

SHEET OF

BRIDGE NO. 2563.6

AGRIES $DD-MMM-YYYY HH:MM$ pw://pwhdruseas02.intranet.hdr:HDR_US_East_02/Documents/WV_DOT/WVDOT-Eugene_Carter_Bridge_3/6.0_CAD_BIM/6.2_WIP/HDR/6.2.2_Sheet_Files/23_Structure/3.016 Truss Framing (2 of 3)

PROJECT NUMBERS		DISTRICT	COUNTY	SHEET NO.	TOTAL
STATE	FEDERAL				
S320-64-57.44 00	NHPP-0064 (497)D	1	KANAWHA		

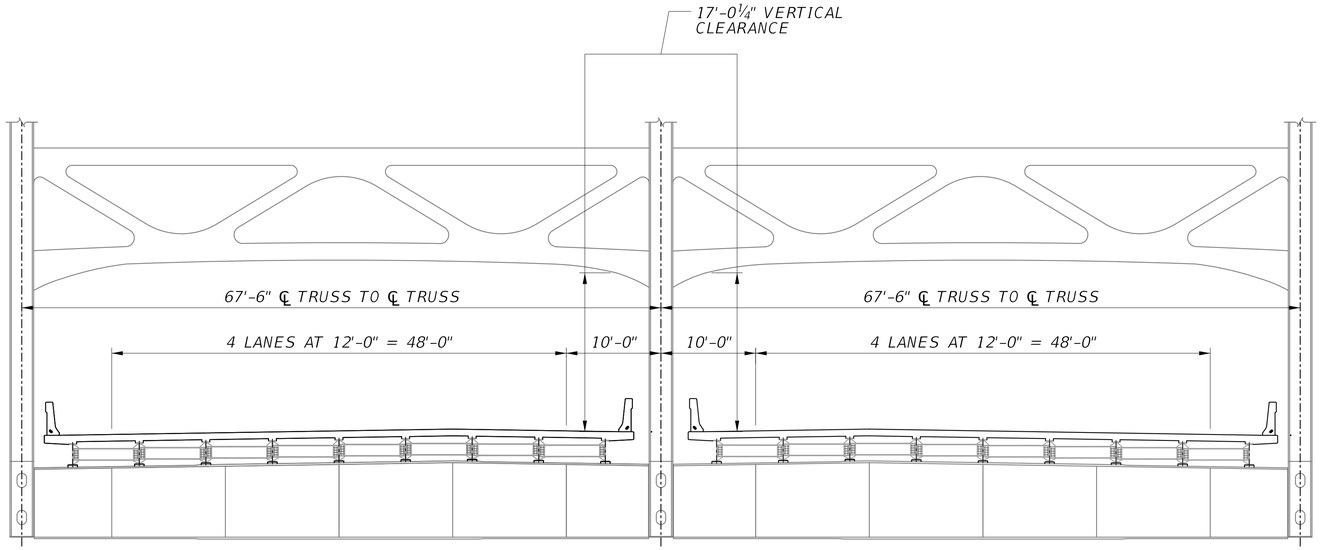

SECTION AT WEST PORTAL

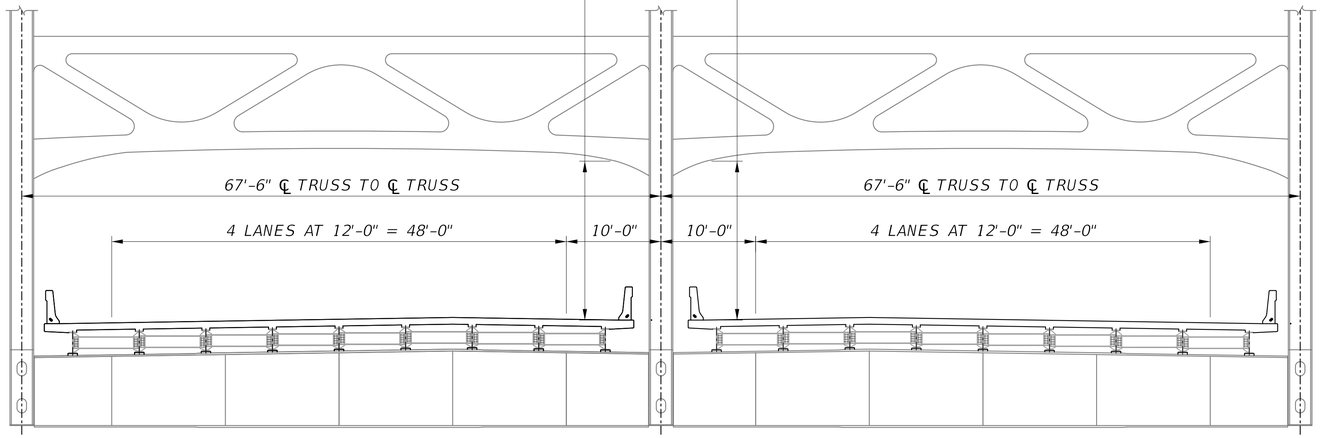

SECTION AT EAST PORTAL

SPAN 7 TRUSS SUPERSTRUCTURE REPAIRS		
REPAIR ID	NO. OF REPAIR LOCATIONS THIS SHEET	NOTES

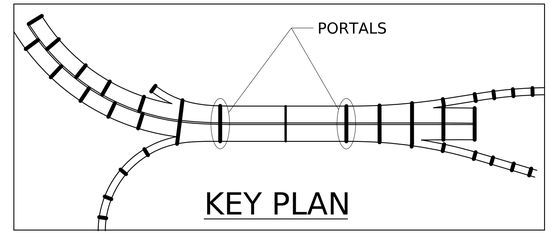

NOTES:

1. FOR GENERAL NOTES, SEE SHEETS XX THRU XX.

NO.	REVISION	DATE	BY

WEST VIRGINIA DEPARTMENT OF TRANSPORTATION
DIVISION OF HIGHWAYS
ENGINEERING DIVISION

I-64 OVER KANAWHA RIVER
EUGENE A. CARTER MEMORIAL BRIDGE +3
TRUSS FRAMING (3 OF 3)

SCALE : 2 0 4 8 ft.
⅛" = 1'-0"

DESIGNED	DATE
KMO	10/25
DRAWN	
ARG	10/25
CHECKED	
REVIEWED	

HDR ENGINEERING INC.
CONSULTING ENGINEERS
CHARLESTON, WV
681-341-6100

SHEET OF

BRIDGE NO. 2563.6

AGRIES $DD-MMM-YYYY HH:MM$ pw://pwhdruseas02.intranet.hdr:HDR_US_East_02/Documents/WV_DOT/WVDOT-Eugene_Carter_Bridge_3/6.0_CAD_BIM/6.2_WIP/HDR/6.2.2_Sheet_Files/23_Structure/3.017 Truss Framing (3 of 3)

PROJECT NUMBERS		DISTRICT	COUNTY	SHEET NO.	TOTAL
STATE	FEDERAL				
S320-64-57.44 00	NHPP-0064 (497)D	1	KANAWHA		

REPAIR S1
SPAN 7 PIER B CROSS GIRDER STOOL REPAIR

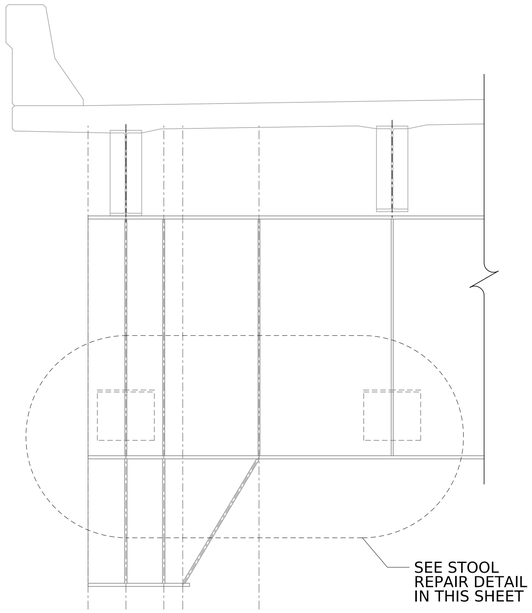

REPAIR S1
SPAN 7 PIER B EXISTING CROSS GIRDER STOOL

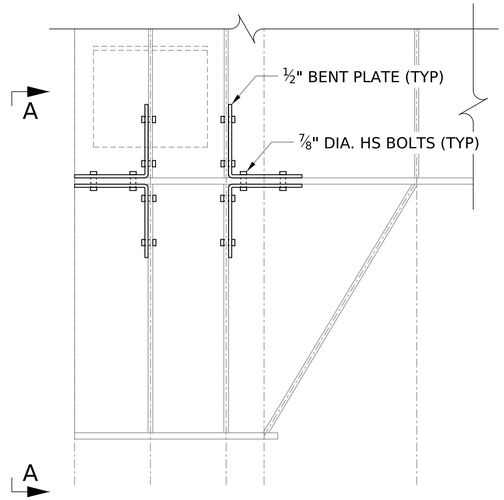

REPAIR S1
STOOL REPAIR DETAIL

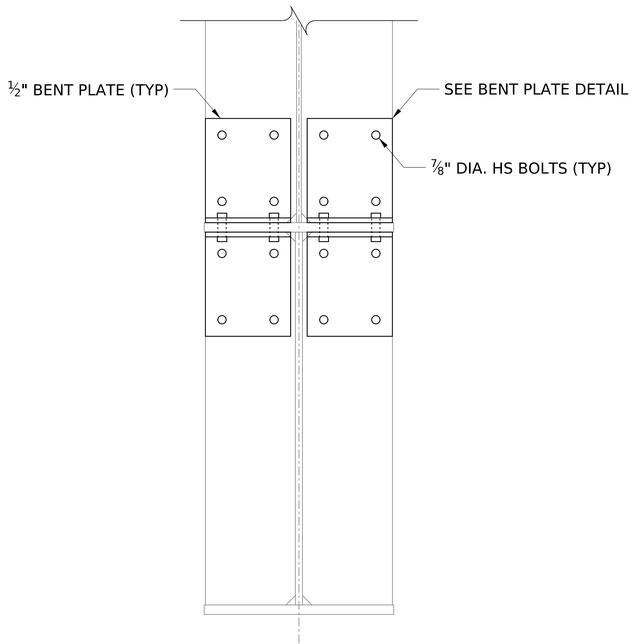

VIEW A-A

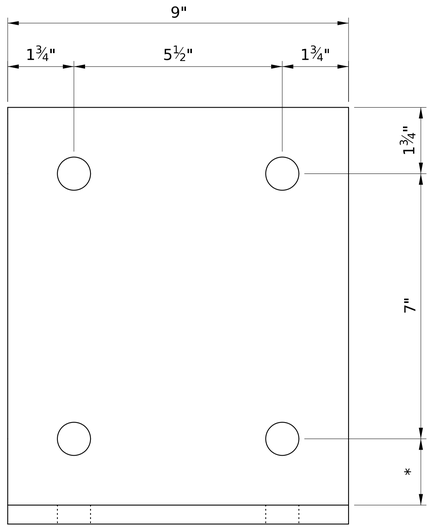

BENT PLATE DETAIL
* SPACE TO CLEAR BEND LINE

REPAIR S1 - ESTIMATED QUANTITIES:

LOCATIONS - SEE FRAMING PLANS SHEETS XX TO XX.

FOR TOTAL QUANTITIES SEE TABLE SHEET XX.

ALL LOCATIONS ARE NOT SHOWN IN PHOTOS.

NOTES FOR REPAIR:

1. REMOVE LAMINAR CORROSION AT STOOL PLATES.
2. DRILL EXISTING BEARING STIFFENER AND CROSS GIRDER PLATES AND ATTACH NEW BENT PLATES AS INDICATED
3. PRIME AND PAINT PER PROJECT SPECIFICATIONS

NOTES:

1. FOR GENERAL NOTES, SEE SHETS X AND X.

NO.	REVISION	DATE	BY

WEST VIRGINIA DEPARTMENT OF TRANSPORTATION
DIVISION OF HIGHWAYS
ENGINEERING DIVISION

I-64 OVER KANAWHA RIVER
EUGENE A. CARTER MEMORIAL BRIDGE +3

STEEL REPAIR S1
GIRDER LOCAL DETERIORATION

DESIGNED	DATE
KMO	11/25
DRAWN	
AFMO	11/25
CHECKED	
REVIEWED	

HDR ENGINEERING INC.
CONSULTING ENGINEERS
CHARLESTON, WV
681-341-6100

SHEET OF

BRIDGE NO. 2563.6

SNOLEN $DD-MMM-YYYY HH:MM$ pw://pwhdruseas02.Intranet.hdr:HDR_US_East_02/Documents/WV_DOT/WVDOT-Eugene_Carter_Bridge_3/6.0_CAD_BIM/6.2_WIP/HDR/6.2.2_Sheet_Files/23_Structure/3.203 Steel Repair S1 - Repair Steel Girder Local Deterioration.dgn

PROJECT NUMBERS		DISTRICT	COUNTY	SHEET NO.	TOTAL
STATE	FEDERAL				
S320-64-57.44 00	NHPP-0064 (497)D	1	KANAWHA		

REPAIR S3
SPAN 7 WB FB3

REPAIR S3
SPAN 7 EB FB1

REPAIR S3
SPAN 7 EB FB4

REPAIR S3
SPAN 7 EB FB11

REPAIR S3
SPAN 7 EB FB11

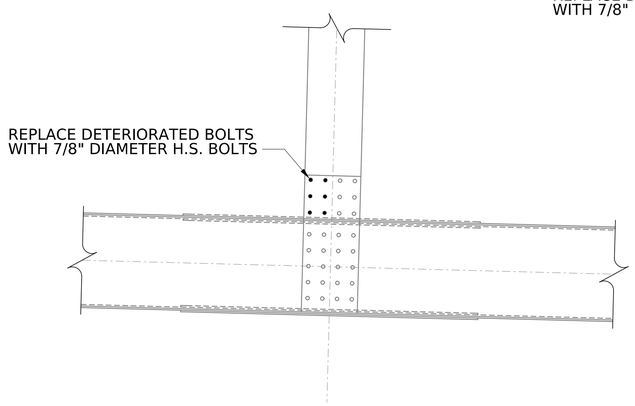

REPAIR S3
(FLOORBEAM TO TRUSS CONNECTION)

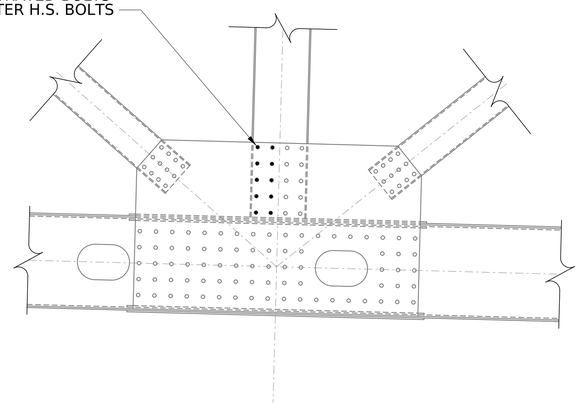

REPAIR S3
(FLOORBEAM TO TRUSS CONNECTION WITH LATERAL BRACING)

REPAIR S3 - ESTIMATED QUANTITIES:

LOCATIONS - SEE FRAMING PLANS SHEETS XX TO XX.

FOR TOTAL QUANTITIES SEE TABLE SHEET XX.

ALL LOCATIONS ARE NOT SHOWN IN PHOTOS.

REPAIR S3 - NOTES:

1. REPLACE ALL DETERIORATED BOLTS WITH 7/8" DIAMETER H.S. BOLTS
2. EXCLUDE BOLT THREADS FROM THE SHEAR PLANE.
3. DO NOT REMOVE MORE THAN 1 BOLT AT A TIME.
4. PRIME AND PAINT PER THE PROJECT SPECIFICATIONS.

NOTES:

1. FOR GENERAL NOTES, SEE SHEETS XX AND XX.

NO.	REVISION	DATE	BY

WEST VIRGINIA DEPARTMENT OF TRANSPORTATION
DIVISION OF HIGHWAYS
ENGINEERING DIVISION

I-64 OVER KANAWHA RIVER
EUGENE A. CARTER MEMORIAL BRIDGE +3

STEEL REPAIR S3 - FLOORBEAM LOCAL DETERIORATION

DESIGNED	DATE
KMO	11/25
DRAWN	
AFMO	11/25
CHECKED	
REVIEWED	

HDR ENGINEERING INC.
CONSULTING ENGINEERS
CHARLESTON, WV
681-341-6100

SHEET OF
BRIDGE NO. 2563.6

SNOLEN $DD-MMM-YYYY HH:MM$ pw://pwhdruseas02.intranet.hdr:HDR_US_East_02/Documents/WV_DOT/WVDOT-Eugene_Carter_Bridge_3/6.0_CAD_BIM/6.2_WIP/HDR/6.2.2_Sheet_Files/23_Structure/3.209 Steel Repair S3 - Repair Floorbeam Local Deterioration (1 of 2).dgn

SNOLEN $DD-MMM-YYYY HH:MM$ pw://pwhdruseas02.Intranet.hdr:HDR_US_East_02/Documents/WV_DOT/WVDOT-Eugene_Carter_Bridge_3/6.0_CAD_BIM/6.2_WIP/HDR/6.2.2_Sheet_Files/23_Structure/3.212 Steel Repair S4 - Repair Lateral Bracing Local Deterioration

PROJECT NUMBERS		DISTRICT	COUNTY	SHEET NO.	TOTAL
STATE	FEDERAL				
S320-64-57.44 00	NHPP-0064 (497)D	1	KANAWHA		

REPAIR S4

SPAN 7 EB - EXAMPLE PHOTO OF MIS-DRILLED CONNECTION

REPAIR S4

SPAN 7 EB - EXAMPLE PHOTO OF CONNECTION

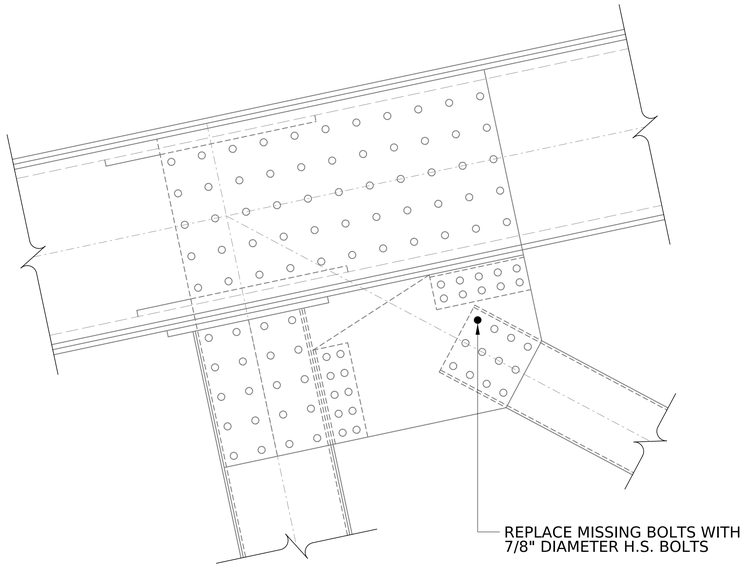

REPAIR S4

SPAN 7 WB SOUTH EXTERIOR TRUSS U3 AND U7

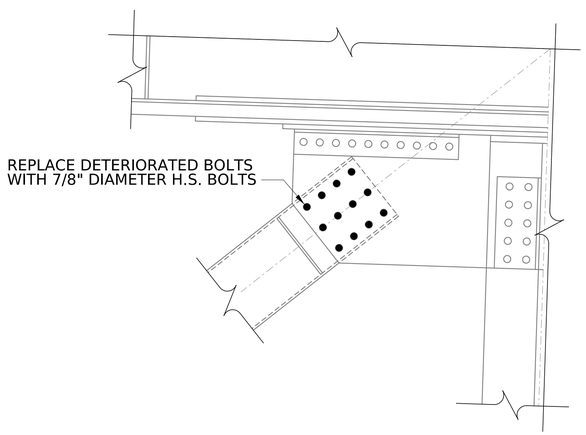

REPAIR S4

SPAN 7 WB AT L0 CENTER TRUSS SPAN 7
WB AT L4 CENTER TRUSS SIMILAR
SPAN 7 EB AT L0 CENTER TRUSS SIMILAR
SPAN 7 EB AT L8 CENTER TRUSS SIMILAR

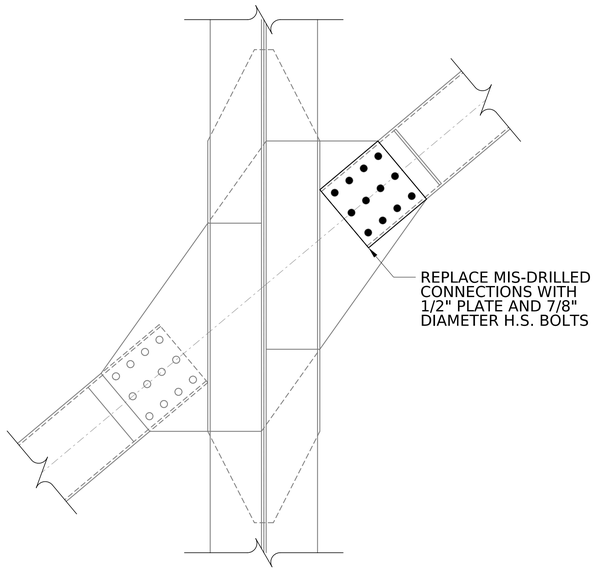

REPAIR S4

SPAN 7 EB AT FB7 AND S5

REPAIR S4 - ESTIMATED QUANTITIES:

LOCATIONS - SEE FRAMING PLANS SHEETS XX TO XX.

FOR TOTAL QUANTITIES SEE TABLE SHEET XX.

ALL LOCATIONS ARE NOT SHOWN IN PHOTOS.

REPAIR S4 - NOTES:

1. REPLACE ALL DETERIORATED BOLTS WITH 7/8" DIAMETER H.S. BOLTS
2. AT MIS-DRILLED CONNECTIONS PROVIDE A SPLICE PLATE AS INDICATED AND CONNECT WITH NEW $^{7}/_{8}$" DIAMETER H.S. BOLTS. EXCLUDE BOLT THREADS FROM THE SHEAR PLANE.
3. PRIME AND PAINT PER THE PROJECT SPECIFICATIONS.

NOTES:

1. FOR GENERAL NOTES, SEE SHEETS XX AND XX.

NO.	REVISION	DATE	BY

WEST VIRGINIA DEPARTMENT OF TRANSPORTATION
DIVISION OF HIGHWAYS
ENGINEERING DIVISION

I-64 OVER KANAWHA RIVER
EUGENE A. CARTER MEMORIAL BRIDGE +3

STEEL REPAIR S4 - LATERAL BRACING LOCAL DETERIORATION

DESIGNED	KMO
DATE	11/25
DRAWN	AFMO
DATE	11/25
CHECKED	
DATE	
REVIEWED	
DATE	

HDR ENGINEERING INC.
CONSULTING ENGINEERS
CHARLESTON, WV
681-341-6100

SHEET OF

BRIDGE NO. 2563.6

PROJECT NUMBERS		DISTRICT	COUNTY	SHEET NO.	TOTAL
STATE	FEDERAL				
S320-64-57.44 00	NHPP-0064 (497)D	1	KANAWHA		

REPAIR S5

SPAN 5 EB MISSING BOLT AT STRINGER TO DIAPHRAGM

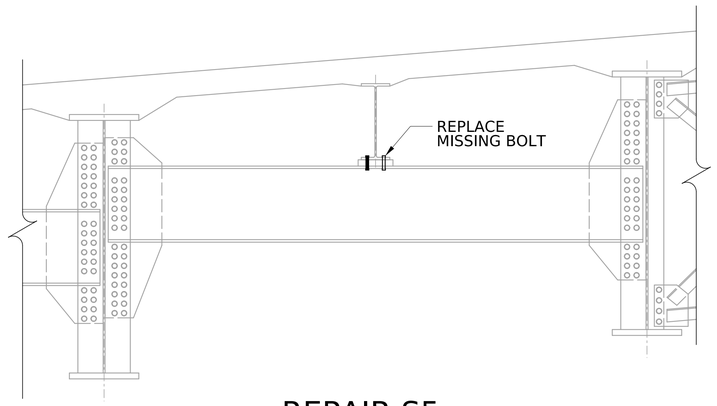

REPAIR S5

SPAN 5 EB MISSING BOLT AT STRINGER TO DIAPHRAGM

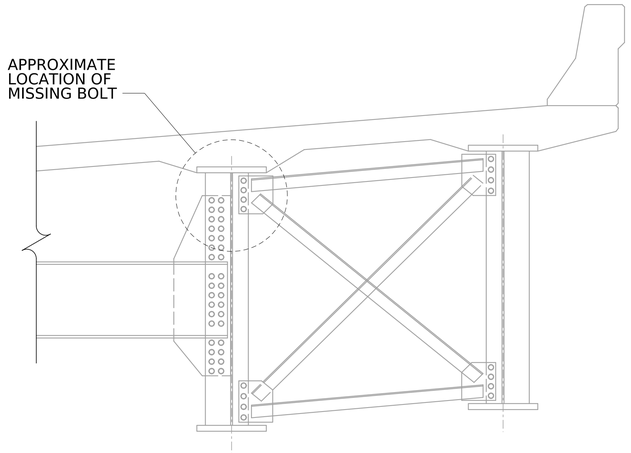

REPAIR S5

SPAN 5 EB MISSING BOLT AT DIAPHRAGM

REPAIR S5

SPAN 6 WB - LOOSE SIGN SUPPORT BOLTS

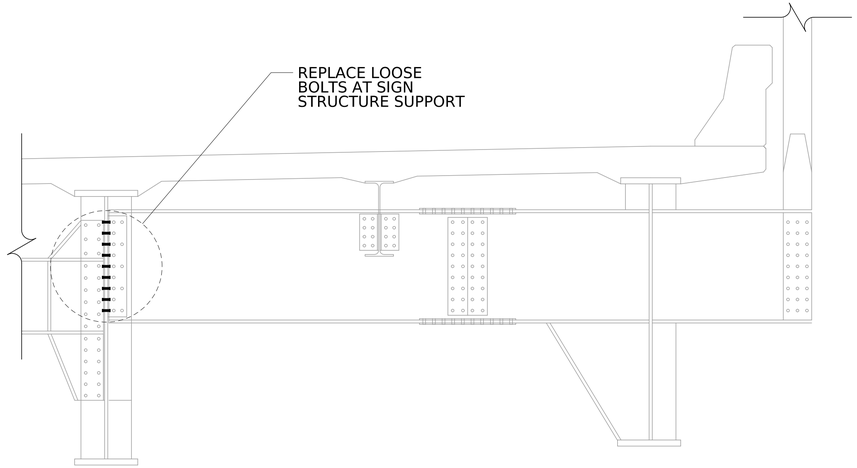

REPAIR S5

SPAN 6 WB - LOOSE BOLTS AT SIGN STRUCTURE SUPPORT

REPAIR S5 - ESTIMATED QUANTITIES:

LOCATIONS - SEE FRAMING PLANS SHEETS XX TO XX.

FOR TOTAL QUANTITIES SEE TABLE SHEET XX.

ALL LOCATIONS ARE NOT SHOWN IN PHOTOS.

REPAIR S5 - NOTES:

1. REPLACE ALL LOOSE OR MISSING BOLTS WITH THE SAME DIAMETER H.S. BOLTS.
2. EXCLUDE BOLT THREADS FROM THE SHEAR PLANE.
3. DO NOT REMOVE MORE THAN 2 BOLTS AT THE SAME TIME.
4. PRIME AND PAINT PER THE PROJECT SPECIFICATIONS.

NOTES:

1. FOR GENERAL NOTES, SEE SHETS X AND X.
2. WORK THIS SHEET WITH SHEET XX.

NO.	REVISION	DATE	BY

WEST VIRGINIA DEPARTMENT OF TRANSPORTATION
DIVISION OF HIGHWAYS
ENGINEERING DIVISION

I-64 OVER KANAWHA RIVER
EUGENE A. CARTER MEMORIAL BRIDGE +3

STEEL REPAIR S5
DIAPHRAGM REPAIR

DESIGNED	DATE
KMO	11/25
DRAWN	
AFMO	11/25
CHECKED	
REVIEWED	

HDR ENGINEERING INC.
CONSULTING ENGINEERS

CHARLESTON, WV
681-341-6100

SHEET OF

BRIDGE NO. 2563.6

SNOLEN $DD-MMM-YYYY HH:MM$ pw://pwhdruseas02.intranet.hdr:HDR_US_East_02/Documents/WV_DOT/WVDOT-Eugene_Carter_Bridge_3/6.0_CAD_BIM/6.2_WIP/HDR/6.2.2_Sheet_Files/23_Structure/3.215 Steel Repair S5 - Diaphragm Repair.dgn

PROJECT NUMBERS		DISTRICT	COUNTY	SHEET NO.	TOTAL
STATE	FEDERAL				
S320-64-57.44 00	NHPP-0064 (497)D	1	KANAWHA		

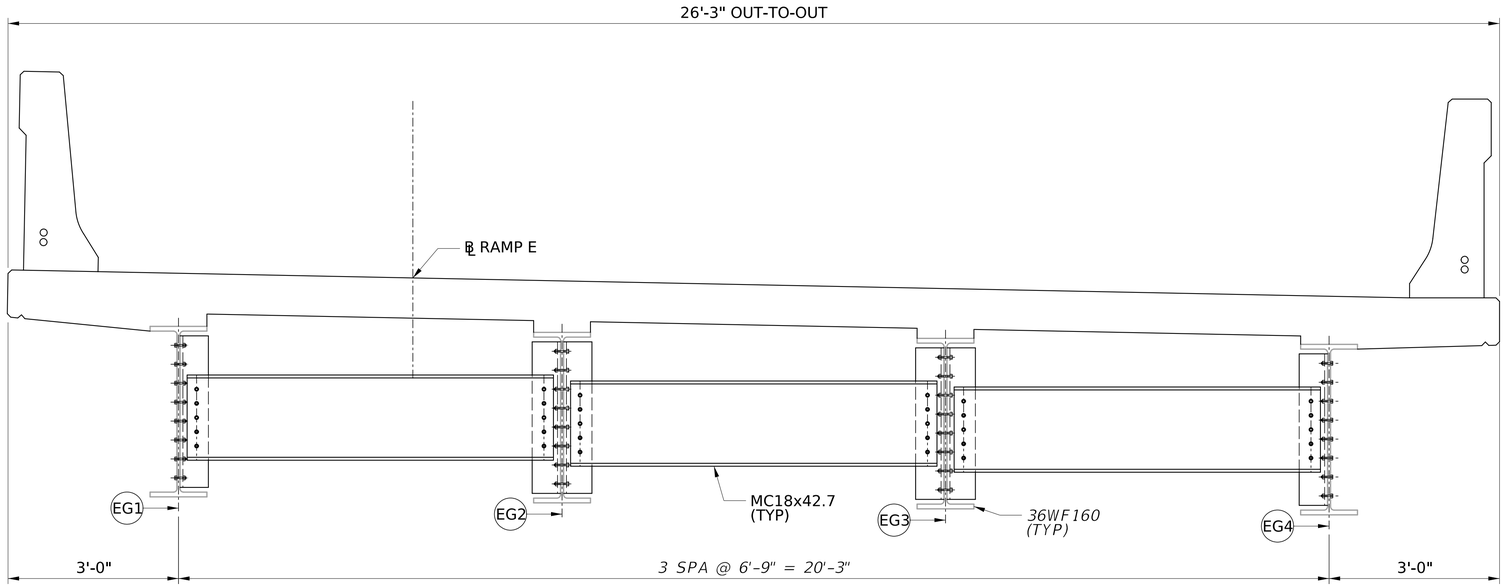

TYPICAL SECTION

(LOOKING BACK STATION)

12 0 12 in.

¾" = 1'-0"

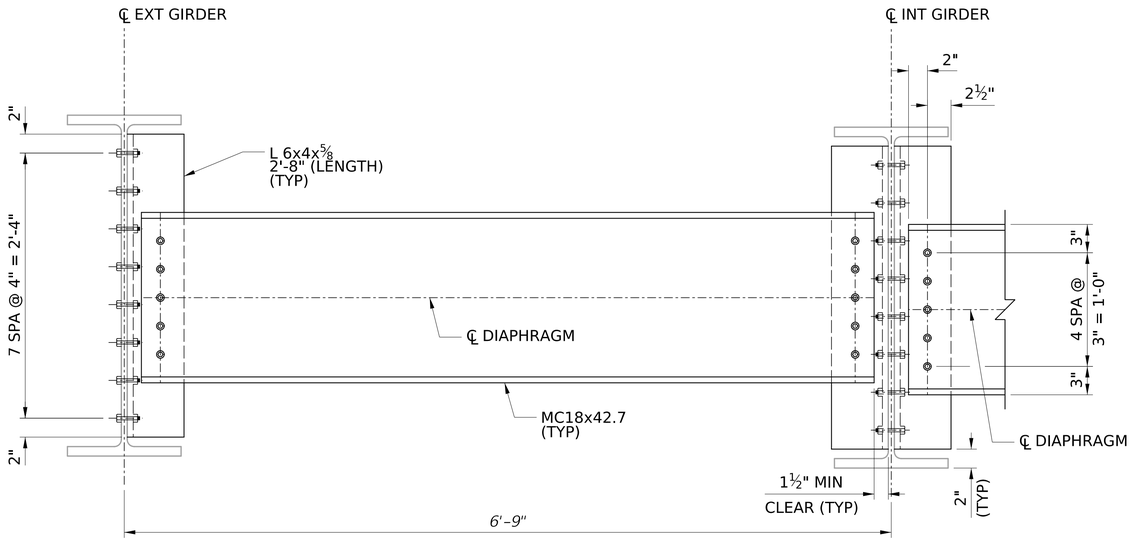

S5 - NEW INTERMEDIATE DIAPHRAGM

NOT TO SCALE

REPAIR S-5 - ESTIMATED QUANTITIES

LOCATIONS (FRAMING PLAN): 12
STRUCTURAL STEEL ---------- 382 LBS
⅞" DIA HS BOLT ---------- 26 EA

ESTIMATED QUANTITIES ARE PER LOCATION

S-5 REPAIR PROCEDURE:

1. COORDINATE INSTALLATION OF NEW DIAPHRAGM TO OCCUR AFTER THE EXISTING DECK REMOVAL AND PRIOR TO PLACEMENT OF NEW DECK.
2. FIELD VERIFY ALL DIMENSIONS PRIOR TO FABRICATION.
3. MECHANICALLY CLEAN AND PRIME EXISTING GIRDER WITHIN THE ZONE OF NEW ANGLE CONNECTION PLATES.
4. USING THE ANGLE CONNECTION PLATE AS A TEMPLATE, FIELD DRILL BOLT HOLES IN GIRDER WEB.
5. FASTEN THE NEW ANGLE CONNECTION PLATES TO THE GIRDERS USING NEW HIGH STRENGTH BOLTS.
6. USING THE ANGLE CONNECTION PLATE AS A TEMPLATE, FIELD DRILL BOLT HOLES IN THE NEW DIAPHRAGM.
7. FASTEN THE NEW ANGLE CONNECTION PLATES TO THE NEW DIAPHRAGM USING HIGH STRENGTH BOLTS.

NOTES:

1. FOR GENERAL NOTES, SEE SHEET XX THRU XX.
2. SEE FRAMING PLAN FOR NEW DIAPHRAGM LOCATIONS.
3. ALL BOLTS SHALL BE ⅞" DIAMETER ASTM F3125 GRADE A325, HIGH STRENGTH BOLTS IN STANDARD HOLES.
4. EXCLUDE THREADS OF DIAPHRAGM BOLTS FROM SHEAR PLANES.
5. BOLTED CONNECTIONS DESIGNED WITH CLASS B FAYING SURFACE.
6. ALL STRUCTURAL STEEL SHALL MEET THE REQUIREMENTS OF AASHTO M270 GRADE 50.
7. DIAPHRAGM CONNECTION ANGLES REQUIRED ONLY IN INSIDE FACE OF EXTERIOR GIRDERS.

NO.	REVISION	DATE	BY

WEST VIRGINIA DEPARTMENT OF TRANSPORTATION
DIVISION OF HIGHWAYS
ENGINEERING DIVISION

I-64 OVER KANAWHA RIVER
EUGENE A. CARTER MEMORIAL BRIDGE +3

STEEL REPAIR S5
NEW DIAPHRAGM RAMP E

DESIGNED	DATE
MLH	12/25
DRAWN	
DJC	12/25
CHECKED	
REVIEWED	

Mead & Hunt

MEAD & HUNT INC.
CONSULTING ENGINEERS
CHARLESTON, WV
304-345-6712

SHEET OF
BRIDGE NO. 2563.6

1420djc $DD-MMM-YYYY HH:MM$ X:\3241600\25191.01\TECH\Structures\Ramp E\sheets\str_gir_002_Ramp E_Eugene Carter Memorial Bridge.dgn

PROJECT NUMBERS		DISTRICT	COUNTY	SHEET NO.	TOTAL
STATE	FEDERAL				
S320-64-57.44 00	NHPP-0064 (497)D	1	KANAWHA		

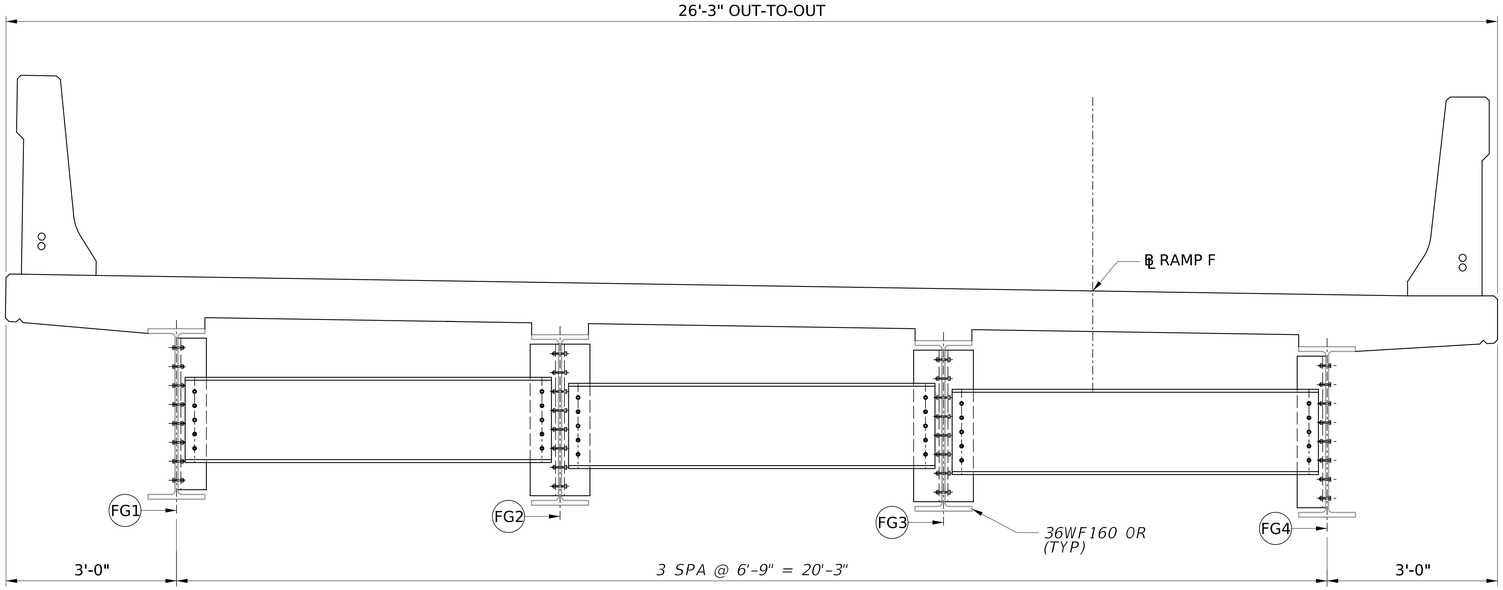

TYPICAL SECTION

(LOOKING AHEAD STATION)

12 0 12 in.

¾" = 1'-0"

REPAIR S-5 - ESTIMATED QUANTITIES

LOCATIONS (FRAMING PLAN): 12
STRUCTURAL STEEL ---------- 382 LBS
⅞" DIA HS BOLT ---------- 26 EA

ESTIMATED QUANTITIES ARE PER LOCATION

S-5 REPAIR PROCEDURE:

1. COORDINATE INSTALLATION OF NEW DIAPHRAGM TO OCCUR AFTER THE EXISTING DECK REMOVAL AND PRIOR TO PLACEMENT OF NEW DECK.
2. FIELD VERIFY ALL DIMENSIONS PRIOR TO FABRICATION.
3. MECHANICALLY CLEAN AND PRIME EXISTING GIRDER WITHIN THE ZONE OF NEW ANGLE CONNECTION PLATES.
4. USING THE ANGLE CONNECTION PLATE AS A TEMPLATE, FIELD DRILL BOLT HOLES IN GIRDER WEB.
5. FASTEN THE NEW ANGLE CONNECTION PLATES TO THE GIRDERS USING NEW HIGH STRENGTH BOLTS.
6. USING THE ANGLE CONNECTION PLATE AS A TEMPLATE, FIELD DRILL BOLT HOLES IN THE NEW DIAPHRAGM.
7. FASTEN THE NEW ANGLE CONNECTION PLATES TO THE NEW DIAPHRAGM USING HIGH STRENGTH BOLTS.

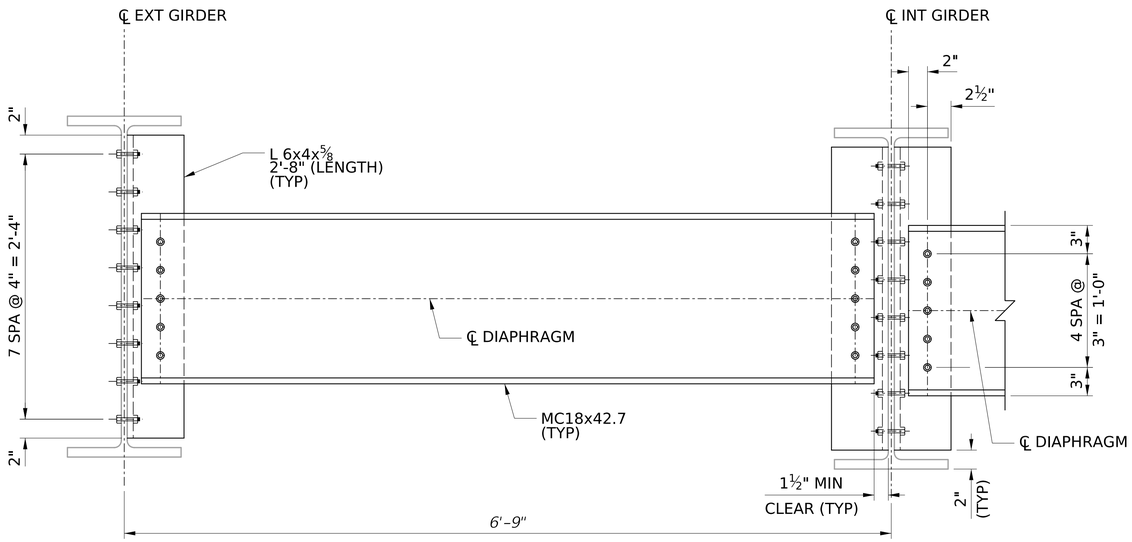

S5 - NEW INTERMEDIATE DIAPHRAGM

NOT TO SCALE

NOTES:

1. FOR GENERAL NOTES, SEE SHEET XX THRU XX.
2. SEE FRAMING PLAN FOR NEW DIAPHRAGM LOCATIONS.
3. ALL BOLTS SHALL BE ⅞" DIAMETER ASTM F3125 GRADE A325, HIGH STRENGTH BOLTS IN STANDARD HOLES.
4. EXCLUDE THREADS OF DIAPHRAGM BOLTS FROM SHEAR PLANES.
5. BOLTED CONNECTIONS DESIGNED WITH CLASS B FAYING SURFACE.
6. ALL STRUCTURAL STEEL SHALL MEET THE REQUIREMENTS OF AASHTO M270 GRADE 50.
7. DIAPHRAGM CONNECTION ANGLES REQUIRED ONLY IN INSIDE FACE OF EXTERIOR GIRDERS.

NO.	REVISION	DATE	BY

WEST VIRGINIA DEPARTMENT OF TRANSPORTATION
DIVISION OF HIGHWAYS
ENGINEERING DIVISION

I-64 OVER KANAWHA RIVER
EUGENE A. CARTER MEMORIAL BRIDGE +3

STEEL REPAIR S5
NEW DIAPHARGM RAMP F

DESIGNED	MAB	DATE	12/25
DRAWN	DJC		12/25
CHECKED			
REVIEWED			

Mead & Hunt

MEAD & HUNT INC.
CONSULTING ENGINEERS
CHARLESTON, WV
304-345-6712

SHEET OF

BRIDGE NO. 2563.6

1420djc $DD-MMM-YYYY HH:MM$ X:\3241600\251911.01\TECH\Structures\Ramp F\sheets\str_gir_002_Ramp F_Eugene Carter Memorial Bridge.dgn

PROJECT NUMBERS		DISTRICT	COUNTY	SHEET NO.	TOTAL
STATE	FEDERAL				
S320-64-57.44 00	NHPP-0064 (497)D	1	KANAWHA		

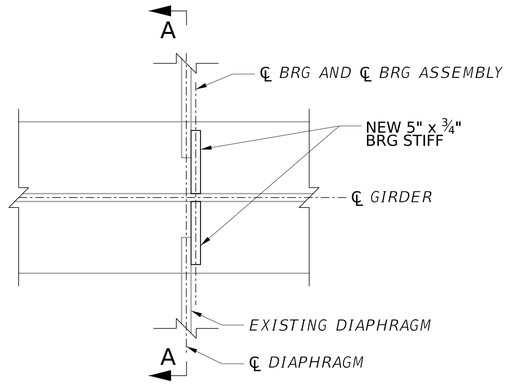

PLAN

NOT TO SCALE
(RAMP E - PIER EC & PIER ED)
(RAMP F - PIER FC & PIER FD)

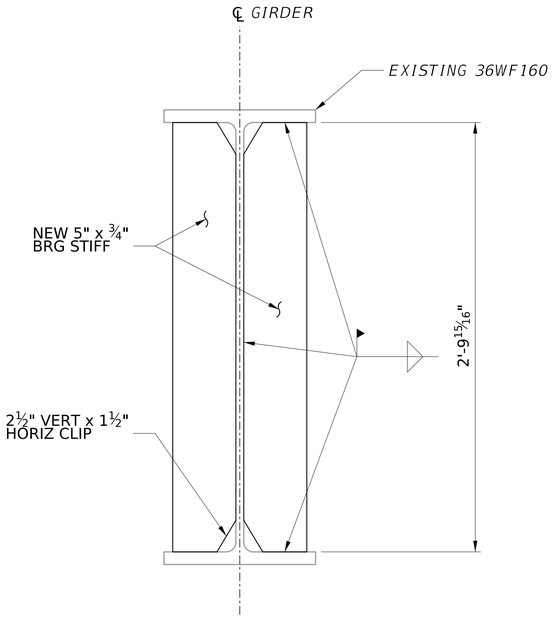

SECTION A-A

NOT TO SCALE

REPAIR S-6 - ESTIMATED QUANTITIES

LOCATIONS (FRAMING PLAN): 16
RAMP E STRUCTURAL STEEL ---------- 101 LBS
RAMP F STRUCTURAL STEEL ---------- 101 LBS
BOLTS RAMP E (EXTERIOR GIRDER) ---- 8 EA
BOLTS RAMP E (INTERIOR GIRDER) ----- 16 EA
BOLTS RAMP F (EXTERIOR GIRDER) ---- 8 EA
BOLTS RAMP F (INTERIOR GIRDER) ----- 16 EA

ESTIMATED QUANTITIES ARE PER LOCATION

S-6 REPAIR PROCEDURE:

1. COORDINATE INSTALLATION OF NEW BEARING STIFFENERS TO OCCUR AFTER THE EXISTING DECK REMOVAL AND PRIOR TO PLACEMENT OF NEW DECK.
2. FIELD VERIFY ALL DIMENSIONS PRIOR TO FABRICATION.
3. REPLACE BEARING STIFFENERS ONE BAY, ONE STIFFENER AT AT TIME.
4. BRACE EXISTING DIAPHRAGM.
5. REMOVE EXISTING BOLTS FROM DIAPHRAGM BEARING STIFFENER CONNECTION.
6. CUT EXISTING BEARING STIFFENERS AND REMOVE. GRIND EXISTING WELD WITHIN THE REPLACEMENT REGION FLUSH WITH THE BASE MATERIAL OF THE EXISTING GIRDER. USE CARE NOT TO DAMAGE EXISTING GIRDER.
7. BLAST CLEAN AND PRIME EXISTING GIRDER WITH ZONE OF CONNECTIONS.
8. INSTALL NEW BEARING STIFFENER VIA FIELD WELDING.
9. USING THE EXISTING DIAPHRAGM AS A TEMPLATE, FIELD DRILL BOLT HOLES IN BEARING STIFFENER.
10. FASTEN THE NEW BEARING STIFFENER TO THE EXISTING DIAPHRAGM USING NEW HIGH STRENGTH BOLTS.

NOTES:

1. FOR GENERAL NOTES, SEE SHEETS XX THRU XX.
2. SEE FRAMING PLANS FOR NEW BEARING STIFFENER LOCATIONS.
3. ALL BOLTS SHALL BE ⅞" DIAMETER ASTM F3125 GRADE A325 HIGH STRENGTH BOLTS IN STANDARD HOLES.
4. EXCLUDE THREADS FROM SHEAR PLANES.
5. BOLTED CONNECTIONS DESIGNED WITH CLASS B FAYING SURFACE.
6. ALL STRUCTURAL STEEL SHALL MEET THE REQUIREMENTS OF AASHTO M270 GRADE 50.

NO.	REVISION	DATE	BY

WEST VIRGINIA DEPARTMENT OF TRANSPORTATION
DIVISION OF HIGHWAYS
ENGINEERING DIVISION

I-64 OVER KANAWHA RIVER
EUGENE A. CARTER MEMORIAL BRIDGE +3
STEEL REPAIR S6 STRENGTHEN
BEARING STIFF RAMP E & RAMP F

DESIGNED	DATE
MLH	12/25
DRAWN	
DJC	12/25
CHECKED	
REVIEWED	

Mead & Hunt

MEAD & HUNT INC.
CONSULTING ENGINEERS
CHARLESTON, WV
304-345-6712

SHEET OF
BRIDGE NO. 2563.6

1420djc $DD-MMM-YYYY HH:MM$ X:\32416000\251911.01\TECH\Structures\Ramp Elsheets\str_glr_003_Ramp E_Eugene Carter Memorial Bridge.dgn

PROJECT NUMBERS		DISTRICT	COUNTY	SHEET NO.	TOTAL
STATE	FEDERAL				
S320-64-57.44 00	NHPP-0064 (497)D	1	KANAWHA		

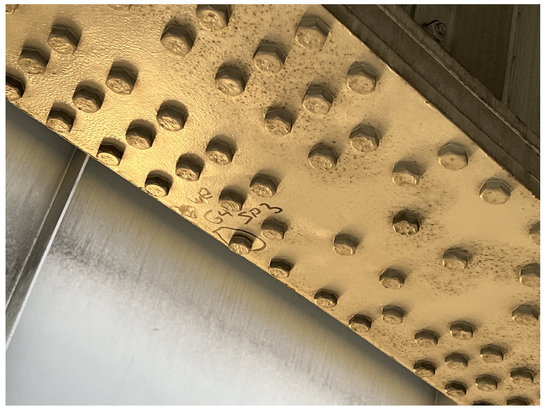

REPAIR S7
SPAN 3 WB G4

REPAIR S7
SPAN 4 EB G1

REPAIR S7
SPAN 8 EB G6

REPAIR S7
SPAN 11 WB G5

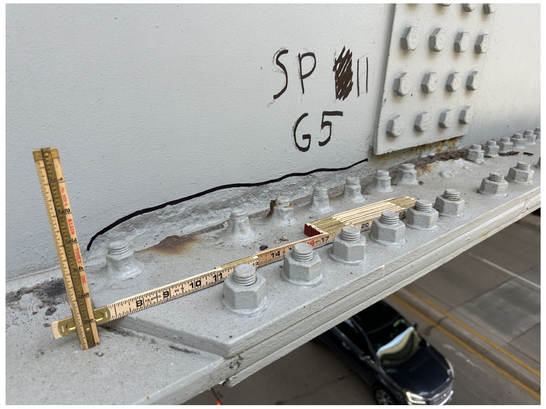

REPAIR S7
SPAN EF WB G1

REPAIR S7 - ESTIMATED QUANTITIES:

LOCATIONS - SEE FRAMING PLANS SHEETS XX TO XX.

FOR TOTAL QUANTITIES SEE TABLE SHEET XX.

ALL LOCATIONS ARE NOT SHOWN IN PHOTOS.

REPAIR S7 - NOTES:

1. REPLACE ALL DETERIORATED BOLTS WITH 7/8" DIAMETER H.S. BOLTS
2. EXCLUDE BOLT THREADS FROM THE SHEAR PLANE.
3. DO NOT REMOVE MORE THAN 2 BOLTS AT THE SAME TIME.
4. PRIME AND PAINT PER THE PROJECT SPECIFICATIONS.

NOTES:

1. FOR GENERAL NOTES, SEE SHEETS X AND X.
2. WORK THIS SHEET WITH SHEET XX.

NO.	REVISION	DATE	BY

WEST VIRGINIA DEPARTMENT OF TRANSPORTATION
DIVISION OF HIGHWAYS
ENGINEERING DIVISION

I-64 OVER KANAWHA RIVER
EUGENE A. CARTER MEMORIAL BRIDGE +3

STEEL REPAIR S7
FIELD SPLICE (1 OF 2)

DESIGNED	KMO	DATE	11/25
DRAWN	AFMO		11/25
CHECKED			
REVIEWED			

HDR ENGINEERING INC.
CONSULTING ENGINEERS
CHARLESTON, WV
681-341-6100

SHEET OF
BRIDGE NO. 2563.6

SNOLEN $DD-MMM-YYYY HH:MM$ pw://pwhdruseas02.Intranet.hdr:HDR_US_East_02/Documents/WV_DOT/WVDOT-Eugene_Carter_Bridge_3/6.0_CAD_BIM/6.2_WIP/HDR/6.2.2_Sheet_Files/23_Structure/3.221 Steel Repair S7 - Repair Field Splice (1 of 2)

PROJECT NUMBERS		DISTRICT	COUNTY	SHEET NO.	TOTAL
STATE	FEDERAL				
S320-64-57.44 00	NHPP-0064 (497)D	1	KANAWHA		

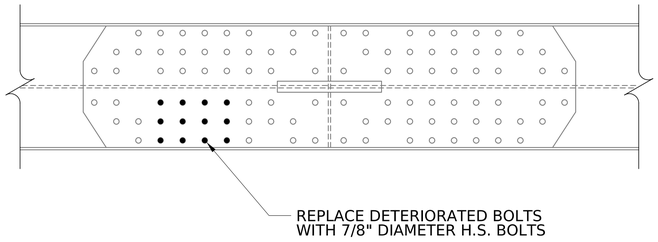

REPAIR S7 - SPANS 1 TO 6

(3 ROW FIELD SPLICES)

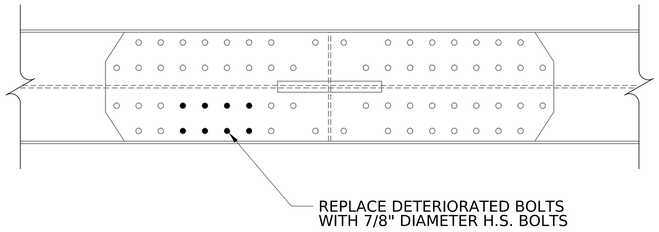

REPAIR S7 - SPANS 1 TO 6

(2 ROW FIELD SPLICES)

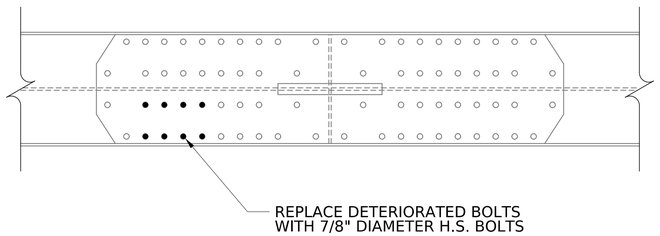

REPAIR S7 - SPANS 8 TO 11

NOTES:

1. FOR GENERAL NOTES, SEE SHEETS X AND X.
2. FOR REPAIR S7 QUANTITIES AND NOTES SEE SHEET XX.
3. WORK THIS SHEET WITH SHEET XX.

NO.	REVISION	DATE	BY

WEST VIRGINIA DEPARTMENT OF TRANSPORTATION
DIVISION OF HIGHWAYS
ENGINEERING DIVISION

I-64 OVER KANAWHA RIVER
EUGENE A. CARTER MEMORIAL BRIDGE +3

STEEL REPAIR S7
FIELD SPLICE (2 OF 2)

DESIGNED	DATE
KMO	11/25
DRAWN	
AFMO	11/25
CHECKED	
REVIEWED	

HDR ENGINEERING INC.
CONSULTING ENGINEERS
CHARLESTON, WV
681-341-6100

SHEET OF

BRIDGE NO. 2563.6

SNOLEN $DD-MMM-YYYY HH:MM$ pw://pwhdruseas02.intranet.hdr:HDR_US_East_02/Documents/WV_DOT/WVDOT-Eugene_Carter_Bridge_3/6.0_CAD_BIM/6.2_WIP/HDR/6.2.2_Sheet_Files/23_Structure/3.222 Steel Repair S7 - Repair Field Splice (2 of 2)

PROJECT NUMBERS		DISTRICT	COUNTY	SHEET NO.	TOTAL
STATE	FEDERAL				
S320-64-57.44 00	NHPP-0064 (497)D	1	KANAWHA		

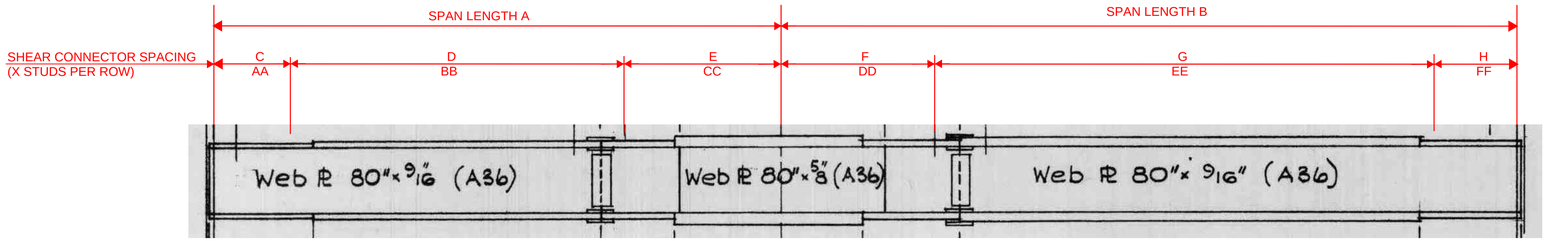

REPAIR S8
SPANS 1 TO 4 EB - G1 TO G4

GIRDER	SPAN	SHEAR STUD SPACING						
G1	1EB	SPAN LENGTH A	C	D	E	AA	BB	CC
		130'-6 1/16"						
	2EB	SPAN LENGTH B	F	G	H	DD	EE	FF
		130'-6 1/16"						
G2	1EB	SPAN LENGTH A	C	D	E	AA	BB	CC
		133'-4 3/16"						
	2EB	SPAN LENGTH B	F	G	H	DD	EE	FF
		133'-4 3/16"						
G3	1EB	SPAN LENGTH A	C	D	E	AA	BB	CC
		136'-2 3/8"						
	2EB	SPAN LENGTH B	F	G	H	DD	EE	FF
		136'-2 3/8"						
G4	1EB	SPAN LENGTH A	C	D	E	AA	BB	CC
		139'-0 1/2"						
	2EB	SPAN LENGTH B	F	G	H	DD	EE	FF
		139'-0 1/2"						
G1	3EB	SPAN LENGTH A	C	D	E	AA	BB	CC
		109'-10 1/4"						
	4EB	SPAN LENGTH B	F	G	H	DD	EE	FF
		109'-10 1/4"						
G2	3EB	SPAN LENGTH A	C	D	E	AA	BB	CC
		112'-3 1/8"						
	4EB	SPAN LENGTH B	F	G	H	DD	EE	FF
		112'-3 1/8"						
G3	3EB	SPAN LENGTH A	C	D	E	AA	BB	CC
		114'-8"						
	4EB	SPAN LENGTH B	F	G	H	DD	EE	FF
		114'-8"						
G4	3EB	SPAN LENGTH A	C	D	E	AA	BB	CC
		117'-0 15/16"						
	4EB	SPAN LENGTH B	F	G	H	DD	EE	FF
		117'-0 15/16"						

SPAN	NUMBER OF STUDS
1EB	
2EB	
3EB	
4EB	

NOTES:

1. FOR GENERAL NOTES, SEE SHEETS X AND X.

2. FOR FRAMING PLAN SEE SHEETS X.

NO.	REVISION	DATE	BY

WEST VIRGINIA DEPARTMENT OF TRANSPORTATION
DIVISION OF HIGHWAYS
ENGINEERING DIVISION

I-64 OVER KANAWHA RIVER
EUGENE A. CARTER MEMORIAL BRIDGE +3

STEEL REPAIR S8 - SHEAR STUD LAYOUT EB (1 OF 3)

DESIGNED	DATE
DRAWN	
CHECKED	
REVIEWED	

HDR ENGINEERING INC.
CONSULTING ENGINEERS
CHARLESTON, WV
681-341-6100

SHEET OF

BRIDGE NO. 2563.6

SNOLEN $DD-MMM-YYYY HH:MM$ pw://pwhdruseas02.intranet.hdr:HDR_US_East_02/Documents/WV_DOT/WVDOT-Eugene_Carter_Bridge_3/6.0_CAD_BIM/6.2_WIP/HDR/6.2.2_Sheet_Files/23_Structure/Reference/str_ref_bdr_Eugene Carter Memorial.dgn

PROJECT NUMBERS		DISTRICT	COUNTY	SHEET NO.	TOTAL
STATE	FEDERAL				
S320-64-57.44 00	NHPP-0064 (497)D	1	KANAWHA		

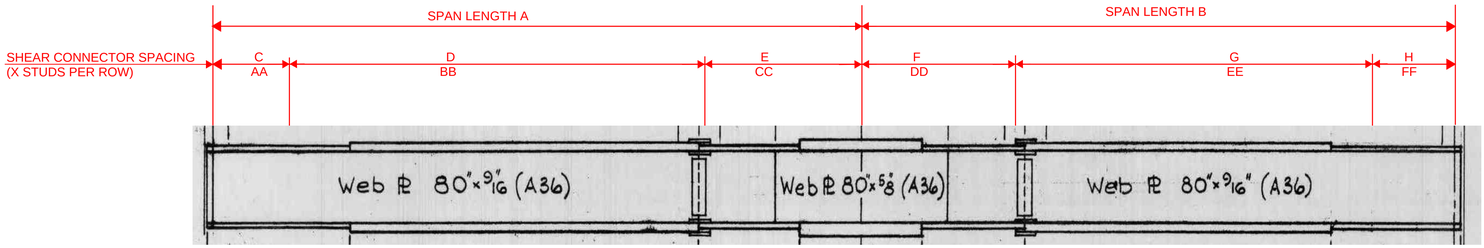

REPAIR S8
SPANS 5 & 6 EB - G1 TO G4

GIRDER	SPAN	SHEAR STUD SPACING						
G1	5EB	SPAN LENGTH A	C	D	E	AA	BB	CC
		146'-2 7/8"						
	6EB	SPAN LENGTH B	F	G	H	DD	EE	FF
		140'-0 7/16"						
G2	5EB	SPAN LENGTH A	C	D	E	AA	BB	CC
		148'-0 3/8"						
	6EB	SPAN LENGTH B	F	G	H	DD	EE	FF
		142'-6 5/16"						
G3	5EB	SPAN LENGTH A	C	D	E	AA	BB	CC
		149'-9 7/8"						
	6EB	SPAN LENGTH B	F	G	H	DD	EE	FF
		145'-0 1/4"						
G3A	5EB	SPAN LENGTH A	C	D	E	AA	BB	CC
		151'-7 3/8"						
	6EB	SPAN LENGTH B	F	G	H	DD	EE	FF
		147'-6 1/8"						
G4	5EB	SPAN LENGTH A	C	D	E	AA	BB	CC
		152'-6 1/8"						
	6EB	SPAN LENGTH B	F	G	H	DD	EE	FF
		148'-9 1/8"						

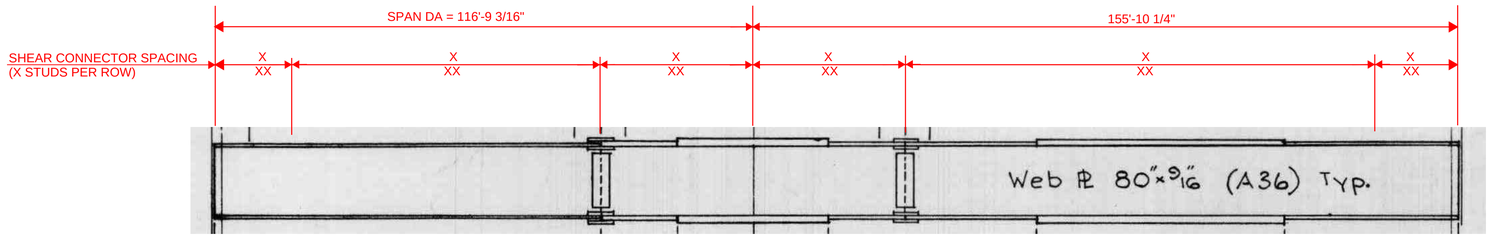

REPAIR S8
SPANS DA & 6 EB - DG4

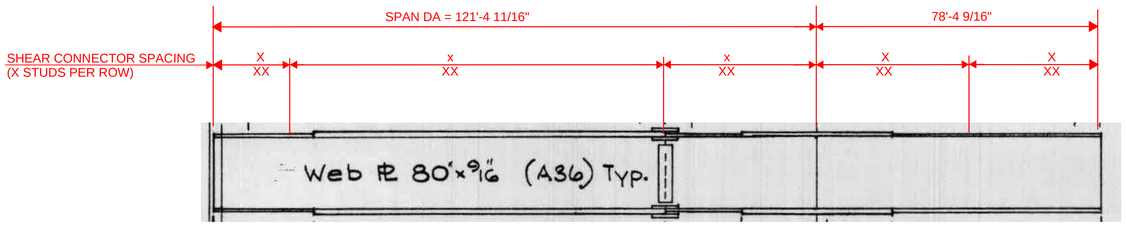

REPAIR S8
SPANS DA & 6 EB - DG3

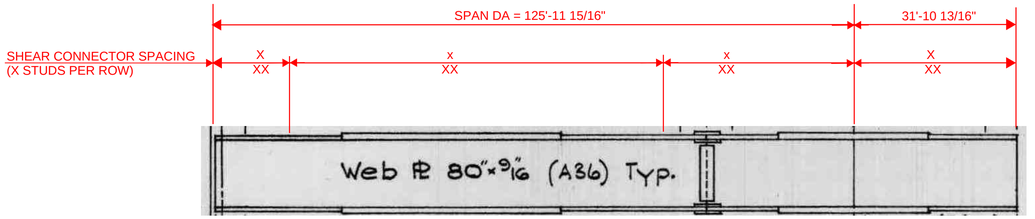

REPAIR S8
SPAN DA - DG2

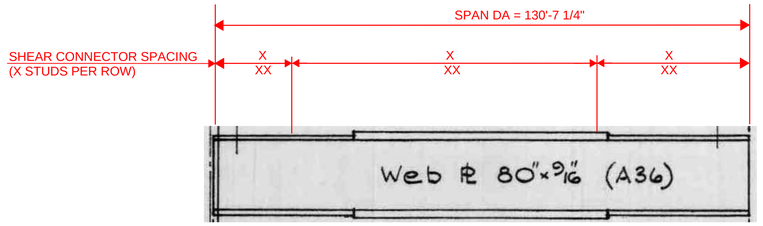

REPAIR S8
SPAN DA - DG1

SPAN	NUMBER OF STUDS
5EB	
6EB	
DA	

NOTES:

1. FOR GENERAL NOTES, SEE SHEETS X AND X.
2. FOR FRAMING PLAN SEE SHEETS X.

NO.	REVISION	DATE	BY

WEST VIRGINIA DEPARTMENT OF TRANSPORTATION
DIVISION OF HIGHWAYS
ENGINEERING DIVISION

I-64 OVER KANAWHA RIVER
EUGENE A. CARTER MEMORIAL BRIDGE +3

STEEL REPAIR S8 - SHEAR STUD LAYOUT EB (2 OF 3)

DESIGNED	DATE
DRAWN	
CHECKED	
REVIEWED	

HDR ENGINEERING INC.
CONSULTING ENGINEERS
CHARLESTON, WV
681-341-6100

SHEET
OF
BRIDGE NO.
2563.6

$DD-MMM-YYYY HH:MM$
SNOLEN
pw://pwhdruseas02.intranet.hdr:HDR_US_East_02/Documents/WV_DOT/WVDOT-Eugene_Carter_Bridge_3/6.0_CAD_BIM/6.2_WIP/HDR/6.2.2_Sheet_Files/23_Structure/Reference/str_ref_bdr_Eugene Carter Memorial.dgn

PROJECT NUMBERS		DISTRICT	COUNTY	SHEET NO.	TOTAL
STATE	FEDERAL				
S320-64-57.44 00	NHPP-0064 (497)D	1	KANAWHA		

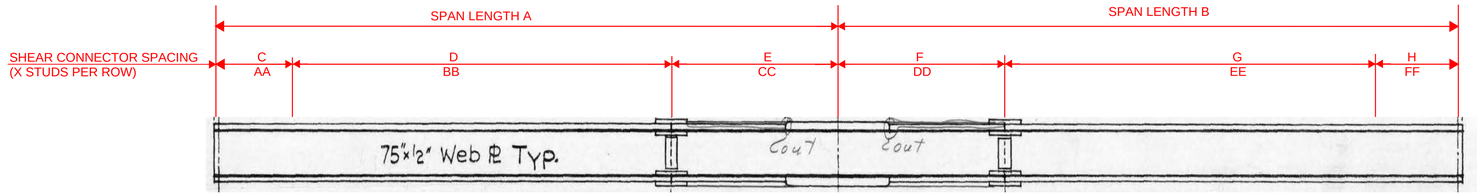

REPAIR S8
SPANS 8 TO 11, DF & EF EB

GIRDER	SPAN	SHEAR STUD SPACING						
G1 - G4	8EB	SPAN LENGTH A	C	D	E	AA	BB	CC
		119'-0"						
	9EB	SPAN LENGTH B	F	G	H	DD	EE	FF
		119'-0"						
G5 - G6	8EB	SPAN LENGTH A	C	D	E	AA	BB	CC
		119-0 15/16"						
	9EB	SPAN LENGTH B	F	G	H	DD	EE	FF
		119'-8"						
G1 - G5	10EB	SPAN LENGTH A	C	D	E	AA	BB	CC
		115'-9"						
	11EB	SPAN LENGTH B	F	G	H	DD	EE	FF
		115'-9"						
FG1	DF	SPAN LENGTH A	C	D	E	AA	BB	CC
		118'-8 9/16"						
	EF	SPAN LENGTH B	F	G	H	DD	EE	FF
		119'-1 3/4"						
FG2	DF	SPAN LENGTH A	C	D	E	AA	BB	CC
		114'-5 1/16"						
	EF	SPAN LENGTH B	F	G	H	DD	EE	FF
		117'-8 1/8"						

SPAN	NUMBER OF STUDS
8EB	
9EB	
10EB	
11EB	
DF	
EF	

NOTES:

1. FOR GENERAL NOTES, SEE SHEETS X AND X.

2. FOR FRAMING PLAN SEE SHEETS X.

NO.	REVISION	DATE	BY

WEST VIRGINIA DEPARTMENT OF TRANSPORTATION
DIVISION OF HIGHWAYS
ENGINEERING DIVISION

I-64 OVER KANAWHA RIVER
EUGENE A. CARTER MEMORIAL BRIDGE +3
STEEL REPAIR S8 - SHEAR STUD LAYOUT EB (3 OF 3)

DESIGNED	DATE
DRAWN	
CHECKED	
REVIEWED	

HDR ENGINEERING INC.
CONSULTING ENGINEERS
CHARLESTON, WV
681-341-6100

SHEET OF

BRIDGE NO. 2563.6

SNOLEN $DD-MMM-YYYY HH:MM$ pw://pwhdruseas02.intranet.hdr:HDR_US_East_02/Documents/WV_DOT/WVDOT-Eugene_Carter_Bridge_3/6.0_CAD_BIM/6.2_WIP/HDR/6.2.2_Sheet_Files/23_Structure/Reference/str_ref_bdr_Eugene Carter Memorial.dgn

PROJECT NUMBERS		DISTRICT	COUNTY	SHEET NO.	TOTAL
STATE	FEDERAL				
S320-64-57.44 00	NHPP-0064 (497)D	1	KANAWHA		

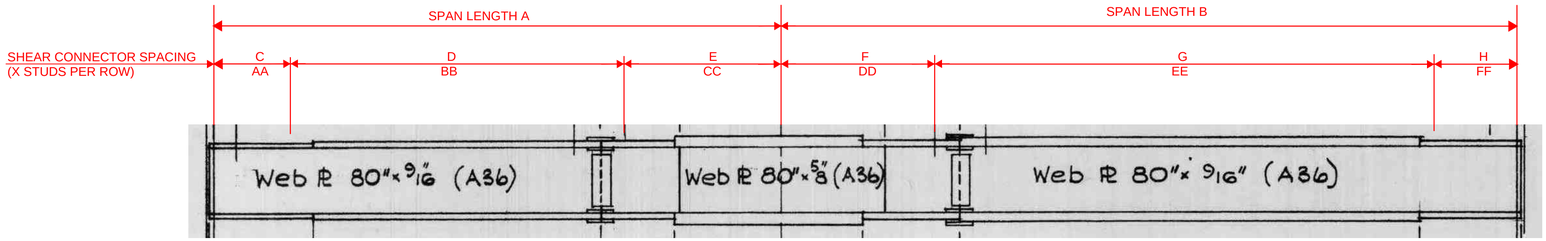

REPAIR S8
SPANS 1 TO 4 WB - G1 TO G4

GIRDER	SPAN	SHEAR STUD SPACING						
G1	1WB	SPAN LENGTH A	C	D	E	AA	BB	CC
		107'-0 1/4"						
	2WB	SPAN LENGTH B	F	G	H	DD	EE	FF
		138'-5 7/16"						
G2	1WB	SPAN LENGTH A	C	D	E	AA	BB	CC
		109'-6 5/8"						
	2WB	SPAN LENGTH B	F	G	H	DD	EE	FF
		141'-8 15/16"						
G3	1WB	SPAN LENGTH A	C	D	E	AA	BB	CC
		112'-0 15/16"						
	2WB	SPAN LENGTH B	F	G	H	DD	EE	FF
		145'-1 7/16"						
G4	1WB	SPAN LENGTH A	C	D	E	AA	BB	CC
		114'-7 1/4"						
	2WB	SPAN LENGTH B	F	G	H	DD	EE	FF
		148'-4"						
G1	3WB	SPAN LENGTH A	C	D	E	AA	BB	CC
		106'-11 3/8"						
	4WB	SPAN LENGTH B	F	G	H	DD	EE	FF
		138'-5 7/16"						
G2	3WB	SPAN LENGTH A	C	D	E	AA	BB	CC
		109'-6"						
	4WB	SPAN LENGTH B	F	G	H	DD	EE	FF
		141'-8 15/16"						
G3	3WB	SPAN LENGTH A	C	D	E	AA	BB	CC
		112'-0 9/16"						
	4WB	SPAN LENGTH B	F	G	H	DD	EE	FF
		145'-0 1/2"						
G4	3WB	SPAN LENGTH A	C	D	E	AA	BB	CC
		114'-7 3/16"						
	4WB	SPAN LENGTH B	F	G	H	DD	EE	FF
		148'-4"						

SPAN	NUMBER OF STUDS
1WB	
2WB	
3WB	
4WB	

NOTES:

1. FOR GENERAL NOTES, SEE SHEETS X AND X.
2. FOR FRAMING PLAN SEE SHEETS X.

NO.	REVISION	DATE	BY

WEST VIRGINIA DEPARTMENT OF TRANSPORTATION
DIVISION OF HIGHWAYS
ENGINEERING DIVISION

I-64 OVER KANAWHA RIVER
EUGENE A. CARTER MEMORIAL BRIDGE +3

STEEL REPAIR S8 - SHEAR STUD LAYOUT WB (1 OF 3)

DESIGNED	DATE
DRAWN	
CHECKED	
REVIEWED	

HDR ENGINEERING INC.
CONSULTING ENGINEERS
CHARLESTON, WV
681-341-6100

SHEET OF

BRIDGE NO. 2563.6

SNOLEN $DD-MMM-YYYY HH:MM$ pw://pwhdruseas02.intranet.hdr:HDR_US_East_02/Documents/WV_DOT/WVDOT-Eugene_Carter_Bridge_3/6.0_CAD_BIM/6.2_WIP/HDR/6.2.2_Sheet_Files/23_Structure/Reference/str_ref_bdr_Eugene Carter Memorial.dgn

PROJECT NUMBERS		DISTRICT	COUNTY	SHEET NO.	TOTAL
STATE	FEDERAL				
S320-64-57.44 00	NHPP-0064 (497)D	1	KANAWHA		

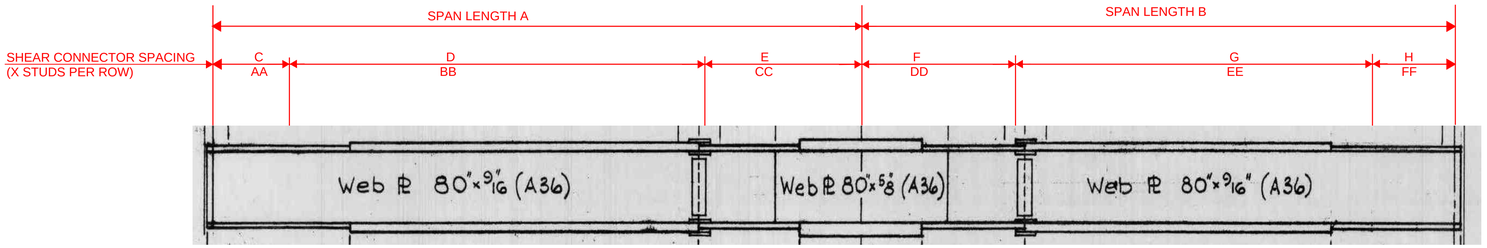

REPAIR S8
SPANS 5 & 6 WB - G1 TO G4

GIRDER	SPAN	SHEAR STUD SPACING						
G1	5WB	SPAN LENGTH A	C	D	E	AA	BB	CC
		138'-5 7/8"						
	6WB	SPAN LENGTH B	F	G	H	DD	EE	FF
		143'-1 3/4"						
G1A	5WB	SPAN LENGTH A	C	D	E	AA	BB	CC
		139'-4 5/8"						
	6WB	SPAN LENGTH B	F	G	H	DD	EE	FF
		144'-6 7/16"						
G2	5WB	SPAN LENGTH A	C	D	E	AA	BB	CC
		141'-2 1/16"						
	6WB	SPAN LENGTH B	F	G	H	DD	EE	FF
		147'-3 11/16"						
G3	5WB	SPAN LENGTH A	C	D	E	AA	BB	CC
		142'-11 5/8"						
	6WB	SPAN LENGTH B	F	G	H	DD	EE	FF
		150'-1"						
G4	5WB	SPAN LENGTH A	C	D	E	AA	BB	CC
		144'-9 1/8"						
	6WB	SPAN LENGTH B	F	G	H	DD	EE	FF
		152'-4 5/16"						

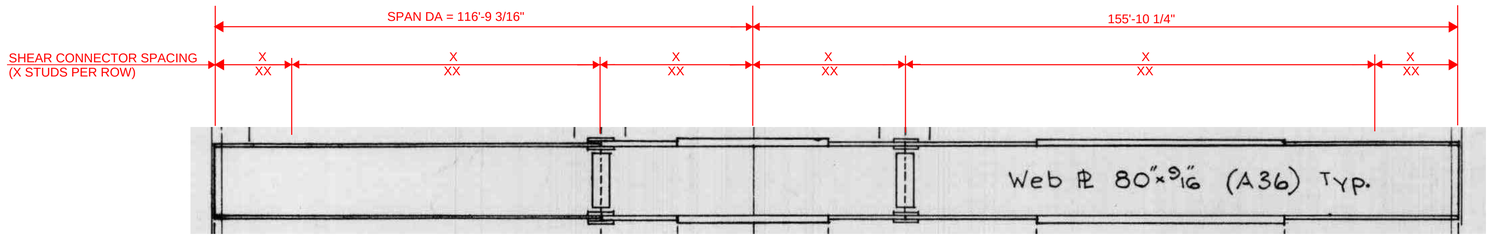

REPAIR S8
SPANS DA & 6 WB - DG4

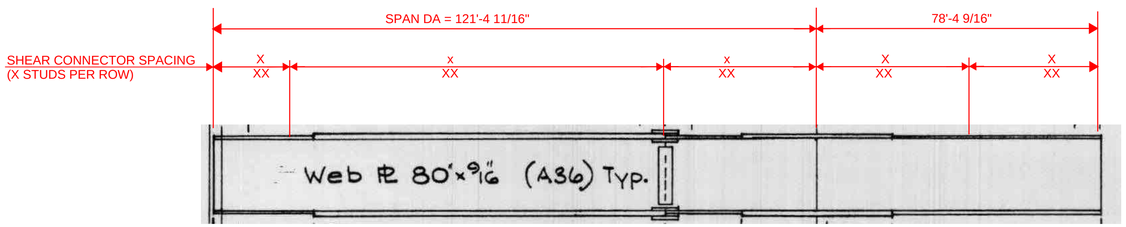

REPAIR S8
SPANS DA & 6 WB - DG3

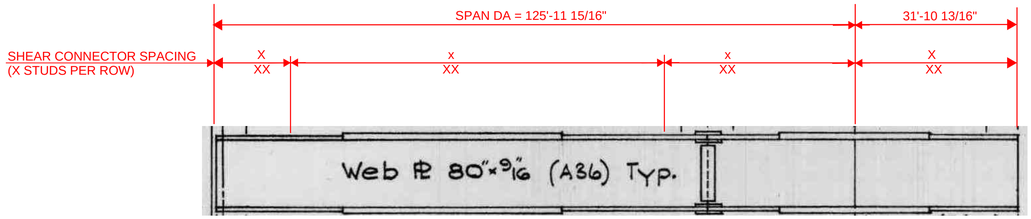

REPAIR S8
SPAN DA - DG2

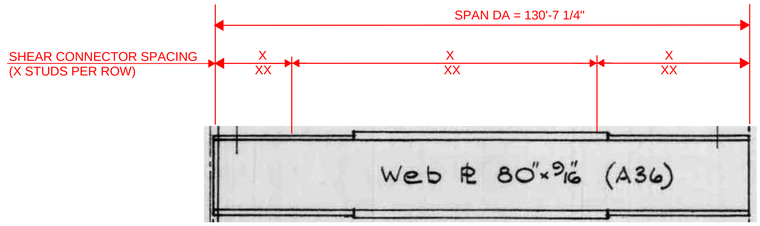

REPAIR S8
SPAN DA - DG1

SPAN	NUMBER OF STUDS
5EB	
6EB	
DA	

NOTES:

1. FOR GENERAL NOTES, SEE SHEETS X AND X.
2. FOR FRAMING PLAN SEE SHEETS X.

NO.	REVISION	DATE	BY

WEST VIRGINIA DEPARTMENT OF TRANSPORTATION
DIVISION OF HIGHWAYS
ENGINEERING DIVISION

I-64 OVER KANAWHA RIVER
EUGENE A. CARTER MEMORIAL BRIDGE +3

STEEL REPAIR S8 - SHEAR STUD LAYOUT WB (2 OF 3)

DESIGNED	DATE
DRAWN	
CHECKED	
REVIEWED	

HDR ENGINEERING INC.
CONSULTING ENGINEERS
CHARLESTON, WV
681-341-6100

SHEET OF
BRIDGE NO. 2563.6

$DD-MMM-YYYY HH:MM$
SNOLEN
pw://pwhdruseas02.intranet.hdr:HDR_US_East_02/Documents/WV_DOT/WVDOT-Eugene_Carter_Bridge_3/6.0_CAD_BIM/6.2_WIP/HDR/6.2.2_Sheet_Files/23_Structure/Reference/str_ref_bdr_Eugene Carter Memorial.dgn

PROJECT NUMBERS		DISTRICT	COUNTY	SHEET NO.	TOTAL
STATE	FEDERAL				
S320-64-57.44 00	NHPP-0064 (497)D	1	KANAWHA		

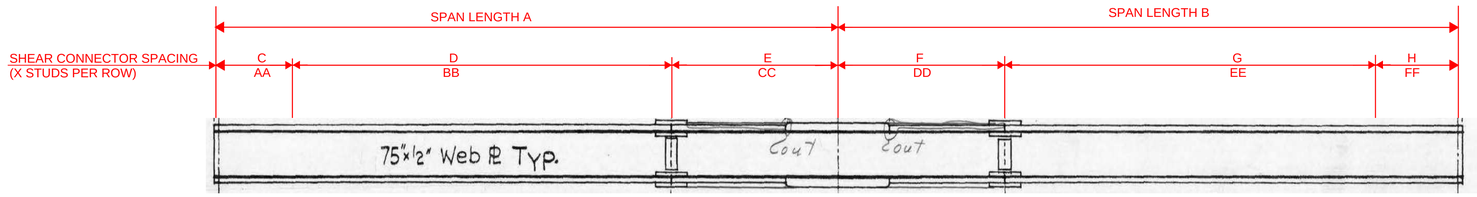

REPAIR S8
SPANS 8 TO 11, DE & EE WB

GIRDER	SPAN	SHEAR STUD SPACING						
G1 - G2	8WB	SPAN LENGTH A	C	D	E	AA	BB	CC
		119'-0 1/2"						
	9WB	SPAN LENGTH B	F	G	H	DD	EE	FF
		119'-4 1/16"						
G3 - G6	8EB	SPAN LENGTH A	C	D	E	AA	BB	CC
		119'-0"						
	9EB	SPAN LENGTH B	F	G	H	DD	EE	FF
		119'-0"						
G1 - G5	10WB	SPAN LENGTH A	C	D	E	AA	BB	CC
		115'-9"						
	11WB	SPAN LENGTH B	F	G	H	DD	EE	FF
		115'-9"						
EG1	DE	SPAN LENGTH A	C	D	E	AA	BB	CC
		114'-9 5/8"						
	EE	SPAN LENGTH B	F	G	H	DD	EE	FF
		118'-1 5/8"						
EG2	DE	SPAN LENGTH A	C	D	E	AA	BB	CC
		??						
	EE	SPAN LENGTH B	F	G	H	DD	EE	FF
		118'-1 5/8"						

SPAN	NUMBER OF STUDS
8WB	
9WB	
10WB	
11WB	
DE	
EE	

NOTES:

1. FOR GENERAL NOTES, SEE SHEETS X AND X.

2. FOR FRAMING PLAN SEE SHEETS X.

NO.	REVISION	DATE	BY

WEST VIRGINIA DEPARTMENT OF TRANSPORTATION
DIVISION OF HIGHWAYS
ENGINEERING DIVISION

I-64 OVER KANAWHA RIVER
EUGENE A. CARTER MEMORIAL BRIDGE +3

STEEL REPAIR S8 - SHEAR STUD LAYOUT WB (3 OF 3)

DESIGNED	DATE
DRAWN	
CHECKED	
REVIEWED	

HDR ENGINEERING INC.
CONSULTING ENGINEERS
CHARLESTON, WV
681-341-6100

SHEET OF

BRIDGE NO. 2563.6

SNOLEN $DD-MMM-YYYY HH:MM$ pw://pwhdruseas02.intranet.hdr:HDR_US_East_02/Documents/WV_DOT/WVDOT-Eugene_Carter_Bridge_3/6.0_CAD_BIM/6.2_WIP/HDR/6.2.2_Sheet_Files/23_Structure/Reference/str_ref_bdr_Eugene Carter Memorial.dgn

PROJECT NUMBERS		DISTRICT	COUNTY	SHEET NO.	TOTAL
STATE	FEDERAL				
S320-64-57.44 00	NHPP-0064 (497)D	1	KANAWHA		

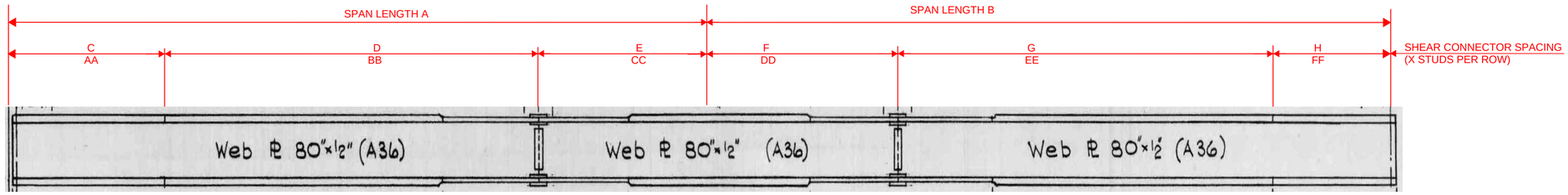

REPAIR S8
SPANS D2 & D3 - DG1 TO DG4

GIRDER	SPAN	SHEAR STUD SPACING						
DG1	D2	SPAN LENGTH A	C	D	E	AA	BB	CC
		114'-3 1/8"						
	D3	SPAN LENGTH B	F	G	H	DD	EE	FF
		114'-3 1/8"						
DG2	D2	SPAN LENGTH A	C	D	E	AA	BB	CC
		112'-0 3/4"						
	D3	SPAN LENGTH B	F	G	H	DD	EE	FF
		112'-0 3/4"						
DG3	D2	SPAN LENGTH A	C	D	E	AA	BB	CC
		109'-10 1/4"						
	D3	SPAN LENGTH B	F	G	H	DD	EE	FF
		109'-10 1/4"						
DG4	D2	SPAN LENGTH A	C	D	E	AA	BB	CC
		107'-7 7/8"						
	D3	SPAN LENGTH B	F	G	H	DD	EE	FF
		107'-7 7/8"						

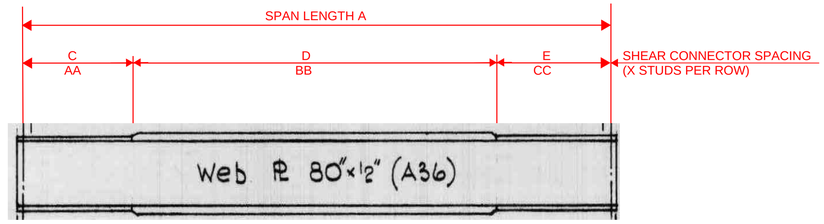

REPAIR S8
SPAN D1 - DG1 TO DG4

GIRDER	SPAN	SHEAR STUD SPACING						
DG1	D1	SPAN LENGTH A	C	D	E	AA	BB	CC
		77'-3 5/16"						
DG2	D1	SPAN LENGTH A	C	D	E	AA	BB	CC
		75'-9 5/16"						
DG3	D1	SPAN LENGTH A	C	D	E	AA	BB	CC
		74'-3 3/8"						
DG4	D1	SPAN LENGTH A	C	D	E	AA	BB	CC
		72'-9 7/16"						

SPAN	NUMBER OF STUDS
D1	
D2	
D3	

NOTES:

1. FOR GENERAL NOTES, SEE SHEETS X AND X.

2. FOR FRAMING PLAN SEE SHEETS X.

NO.	REVISION	DATE	BY

WEST VIRGINIA DEPARTMENT OF TRANSPORTATION
DIVISION OF HIGHWAYS
ENGINEERING DIVISION

I-64 OVER KANAWHA RIVER
EUGENE A. CARTER MEMORIAL BRIDGE +3

STEEL REPAIR S8 - SHEAR STUD LAYOUT RAMP D

DESIGNED	DATE
DRAWN	
CHECKED	
REVIEWED	

HDR ENGINEERING INC.
CONSULTING ENGINEERS
CHARLESTON, WV
681-341-6100

SHEET OF

BRIDGE NO. 2563.6

SNOLEN $DD-MMM-YYYY HH:MM$ pw://pwhdruseas02.intranet.hdr:HDR_US_East_02/Documents/WV_DOT/WVDOT-Eugene_Carter_Bridge_3/6.0_CAD_BIM/6.2_WIP/HDR/6.2.2_Sheet_Files/23_Structure/Reference/str_ref_bdr_Eugene Carter Memorial.dgn

PROJECT NUMBERS		DISTRICT	COUNTY	SHEET NO.	TOTAL
STATE	FEDERAL				
S320-64-57.44 00	NHPP-0064 (497)D	1	KANAWHA		

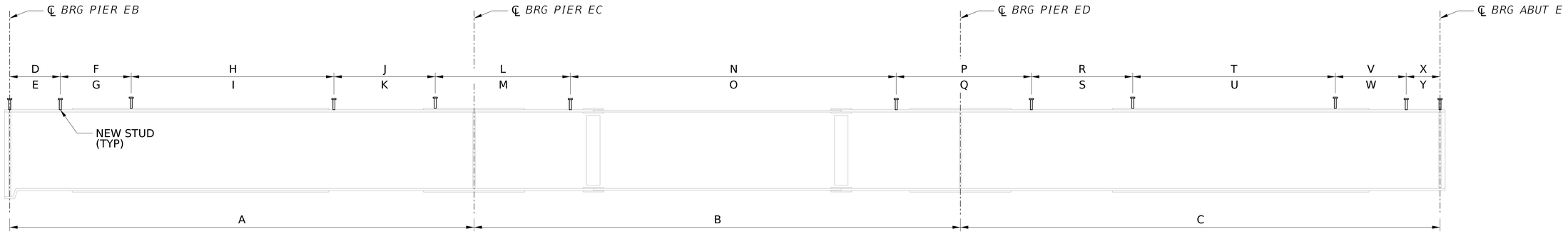

GIRDER ELEVATION - SPANS E1 - E3

NOT TO SCALE

NOTE: PLACE 3 - ⅞" DIAMETER SHEAR STUDS PER ROW
ADJUST STUD SPACING AS NEEDED TO AVOID FIELD SPLICES. ADD ADDITIONAL STUDS WHERE NEEDED TO MEET MAX SPACING.

SPAN	NUMBER OF STUDS
E1	948
E2	1,188
E3	996

SPANS			
GIRDER	A (FT)	B (FT)	C (FT)
EG1	68'-10⅜"	72'-2¾₁₆"	71'-2⅛"
EG2	68'-8⅛"	71'-10⅝"	70'-10⅝"
EG3	68'-5⅞"	71'-7¹⁄₁₆"	70'-7⅛"
EG4	68'-3⅝"	71'-3½"	70'-3⅝"

DIMENSIONS												
GIRDER	D	E (FT)	F	G (FT)	H	I (FT)	J	K (FT)	L	M (FT)	N	O (FT)
EG1	15 SPA @ 6"	7'-6"	14 SPA @ 9"	10'-6"	30 SPA @ 12"	30'-0"	20 SPA @ 9"	15'-0"	16 SPA @ 1'-3"	20'-0"	68 SPA @ 9"(-)	48'-8¹³⁄₁₆"
EG2	15 SPA @ 6"	7'-6"	14 SPA @ 9"	10'-6"	30 SPA @ 12"	30'-0"	20 SPA @ 9"	15'-0"	16 SPA @ 1'-3"	20'-0"	67 SPA @ 9"(-)	47'-11⁵⁄₁₆"
EG3	15 SPA @ 6"	7'-6"	14 SPA @ 9"	10'-6"	30 SPA @ 12"	30'-0"	20 SPA @ 9"	15'-0"	16 SPA @ 1'-3"	20'-0"	66 SPA @ 9"(-)	47'-1¹³⁄₁₆"
EG4	15 SPA @ 6"	7'-6"	14 SPA @ 9"	10'-6"	30 SPA @ 12"	30'-0"	20 SPA @ 9"	15'-0"	16 SPA @ 1'-3"	20'-0"	65 SPA @ 9"(-)	46'-4⁵⁄₁₆"

DIMENSIONS										
GIRDER	P	Q (FT)	R	S (FT)	T	U (FT)	V	W (FT)	X	Y (FT)
EG1	16 SPA @ 1'-3"	20'-0"	20 SPA @ 9"	15'-0"	30 SPA @ 12"	30'-0"	14 SPA @ 9"	10'-6"	10 SPA @ 6"	5'-0"
EG2	16 SPA @ 1'-3"	20'-0"	20 SPA @ 9"	15'-0"	30 SPA @ 12"	30'-0"	14 SPA @ 9"	10'-6"	10 SPA @ 6"	5'-0"
EG3	16 SPA @ 1'-3"	20'-0"	20 SPA @ 9"	15'-0"	30 SPA @ 12"	30'-0"	14 SPA @ 9"	10'-6"	10 SPA @ 6"	5'-0"
EG4	16 SPA @ 1'-3"	20'-0"	20 SPA @ 9"	15'-0"	30 SPA @ 12"	30'-0"	14 SPA @ 9"	10'-6"	10 SPA @ 6"	5'-0"

NOTES:

1. FOR GENERAL NOTES, SEE SHEETS XX AND XX.
2. FOR ADDITIONAL GIRDER INFORMATION, SEE ORIGINAL PLANS.
3. ALL SHEAR STUDS ARE ⅞" DIA x 5".
4. SHEAR STUD SPACING SHOWN ARE MAXIMUMS.

NO.	REVISION	DATE	BY

WEST VIRGINIA DEPARTMENT OF TRANSPORTATION
DIVISION OF HIGHWAYS
ENGINEERING DIVISION

I-64 OVER KANAWHA RIVER
EUGENE A. CARTER MEMORIAL BRIDGE +3
STEEL REPAIR S8 - SHEAR STUD LAYOUT RAMP E

DESIGNED	MLH
DATE	12/25
DRAWN	DJC
DATE	12/25
CHECKED	
REVIEWED	

Mead & Hunt

MEAD & HUNT INC.
CONSULTING ENGINEERS
CHARLESTON, WV
304-345-6712

SHEET
OF
BRIDGE NO.
2563.6

1420djc
$DD-MMM-YYYY HH:MM$
X:\324160025191 1.01\TECH\Structures\Ramp E\sheets\str_gir_005_Ramp E_Eugene Carter Memorial Bridge.dgn

PROJECT NUMBERS		DISTRICT	COUNTY	SHEET NO.	TOTAL
STATE	FEDERAL				
S320-64-57.44 00	NHPP-0064 (497)D	1	KANAWHA		

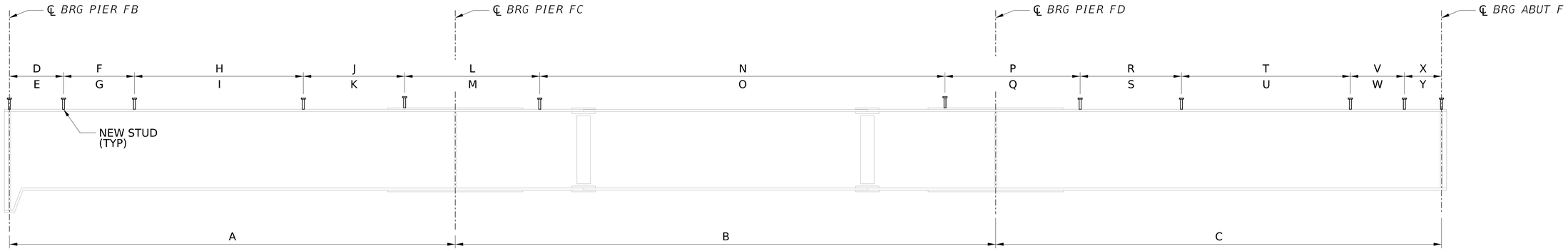

GIRDER ELEVATION - SPANS F1 - F3

NOT TO SCALE

NOTE: PLACE 3 - ⅞" DIAMETER SHEAR STUDS PER ROW
ADJUST STUD SPACING AS NEEDED TO AVOID FIELD SPLICES. ADD ADDITIONAL STUDS WHERE NEEDED TO MEET MAX SPACING.

SPAN	NUMBER OF STUDS
F1	936
F2	1,140
F3	936

SPANS			
GIRDER	A (FT)	B (FT)	C (FT)
FG1	66'-0"	80'-0"	66'-0"
FG2	66'-0"	80'-0"	66'-0"
FG3	66'-0"	80'-0"	66'-0"
FG4	66'-0"	80'-0"	66'-0"

DIMENSIONS												
GIRDER	D	E (FT)	F	G (FT)	H	I (FT)	J	K (FT)	L	M (FT)	N	O (FT)
FG1	16 SPA @ 6"	8'-0"	14 SPA @ 9"	10'-6"	25 SPA @ 12"	25'-0"	20 SPA @ 9"	15'-0"	16 SPA @ 1'-3"	20'-0"	80 SPA @ 9"	60'-0"
FG2	16 SPA @ 6"	8'-0"	14 SPA @ 9"	10'-6"	25 SPA @ 12"	25'-0"	20 SPA @ 9"	15'-0"	16 SPA @ 1'-3"	20'-0"	80 SPA @ 9"	60'-0"
FG3	16 SPA @ 6"	8'-0"	14 SPA @ 9"	10'-6"	25 SPA @ 12"	25'-0"	20 SPA @ 9"	15'-0"	16 SPA @ 1'-3"	20'-0"	80 SPA @ 9"	60'-0"
FG4	16 SPA @ 6"	8'-0"	14 SPA @ 9"	10'-6"	25 SPA @ 12"	25'-0"	20 SPA @ 9"	15'-0"	16 SPA @ 1'-3"	20'-0"	80 SPA @ 9"	60'-0"

DIMENSIONS										
GIRDER	P	Q (FT)	R	S (FT)	T	U (FT)	V	W (FT)	X	Y (FT)
FG1	16 SPA @ 1'-3"	20'-0"	20 SPA @ 9"	15'-0"	25 SPA @ 12"	25'-0"	14 SPA @ 9"	10'-6"	11 SPA @ 6"	5'-6"
FG2	16 SPA @ 1'-3"	20'-0"	20 SPA @ 9"	15'-0"	25 SPA @ 12"	25'-0"	14 SPA @ 9"	10'-6"	11 SPA @ 6"	5'-6"
FG3	16 SPA @ 1'-3"	20'-0"	20 SPA @ 9"	15'-0"	25 SPA @ 12"	25'-0"	14 SPA @ 9"	10'-6"	11 SPA @ 6"	5'-6"
FG4	16 SPA @ 1'-3"	20'-0"	20 SPA @ 9"	15'-0"	25 SPA @ 12"	25'-0"	14 SPA @ 9"	10'-6"	11 SPA @ 6"	5'-6"

NOTES:

1. FOR GENERAL NOTES, SEE SHEETS XX AND XX.
2. FOR ADDITIONAL GIRDER INFORMATION, SEE ORIGINAL PLANS.
3. ALL SHEAR STUDS ARE ⅞" DIA x 5".
4. SHEAR STUD SPACING SHOWN ARE MAXIMUMS.

NO.	REVISION	DATE	BY

WEST VIRGINIA DEPARTMENT OF TRANSPORTATION
DIVISION OF HIGHWAYS
ENGINEERING DIVISION

I-64 OVER KANAWHA RIVER
EUGENE A. CARTER MEMORIAL BRIDGE +3
STEEL REPAIR S8 - SHEAR STUD LAYOUT RAMP F

DESIGNED	MLH
DATE	12/25
DRAWN	DJC
DATE	12/25
CHECKED	
REVIEWED	

Mead & Hunt

MEAD & HUNT INC.
CONSULTING ENGINEERS
CHARLESTON, WV
304-345-6712

SHEET OF
BRIDGE NO. 2563.6

X:\324160025191 1.01\TECH\Structures\Ramp F\sheets\str_gir_005_Ramp F_Eugene Carter Memorial Bridge.dgn
$DD-MMM-YYYY HH:MM$
1420djc

PROJECT NUMBERS		DISTRICT	COUNTY	SHEET NO.	TOTAL
STATE	FEDERAL				
S320-64-57.44 00	NHPP-0064 (497)D	1	KANAWHA		

REPAIR S12

SPAN 7 SOUTH EXTERIOR TRUSS AT L4

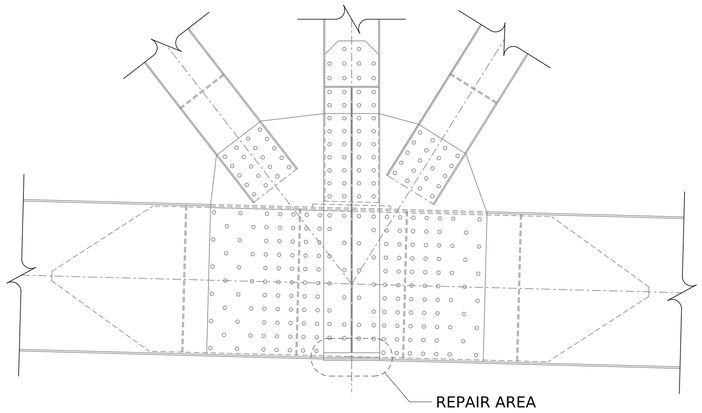

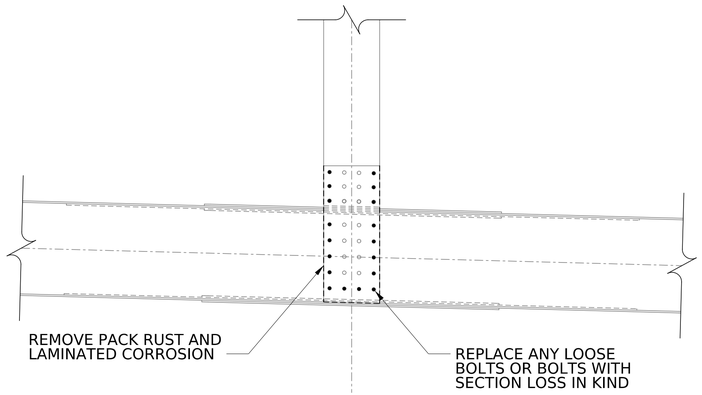

REPAIR S12

SPAN 7 SOUTH EXTERIOR TRUSS AT L4

REPAIR S12 - ESTIMATED QUANTITIES:

LOCATIONS - SEE FRAMING PLANS SHEETS XX TO XX.

FOR TOTAL QUANTITIES SEE TABLE SHEET XX.

REPAIR S12 - PROCEDURE:

1. REMOVE ALL PACK RUST AND LAMINATED CORROSION FROM THE PLATES.
2. MEASURE PLATE EDGE DISTANCE AND SUBMIT TO THE REPRESENTATIVE.
3. REPLACE ALL LOOSE OR MISSING BOLTS WITH THE SAME DIAMETER H.S. BOLTS.
4. EXCLUDE BOLT THREADS FROM THE SHEAR PLANE.
5. DO NOT REMOVE MORE THAN 2 BOLTS AT THE SAME TIME.
6. PRIME AND PAINT PER THE PROJECT SPECIFICATIONS.

NOTES:

1. FOR GENERAL NOTES, SEE SHETS X AND X.

NO.	REVISION	DATE	BY

WEST VIRGINIA DEPARTMENT OF TRANSPORTATION
DIVISION OF HIGHWAYS
ENGINEERING DIVISION

I-64 OVER KANAWHA RIVER
EUGENE A. CARTER MEMORIAL BRIDGE +3

STEEL REPAIR S12
TRUSS MEMBER REPAIR

DESIGNED	DATE
KMO	11/25
DRAWN	
AFMO	11/25
CHECKED	
REVIEWED	

HDR ENGINEERING INC.
CONSULTING ENGINEERS
CHARLESTON, WV
681-341-6100

SHEET OF

BRIDGE NO. 2563.6

SNOLEN $DD-MMM-YYYY HH:MM$ pw://pwhdruseas02.intranet.hdr:HDR_US_East_02/Documents/WV_DOT/WVDOT-Eugene_Carter_Bridge_3/6.0_CAD_BIM/6.2_WIP/HDR/6.2.2_Sheet_Files/23_Structure/3.236 Steel Repair S12 - Truss Member Repair.dgn

PROJECT NUMBERS		DISTRICT	COUNTY	SHEET NO.	TOTAL
STATE	FEDERAL				
S320-64-57.44 00	NHPP-0064 (497)D	1	KANAWHA		

DETAILS UNDER DEVELOPMENT

NO.	REVISION	DATE	BY

WEST VIRGINIA DEPARTMENT OF TRANSPORTATION
DIVISION OF HIGHWAYS
ENGINEERING DIVISION

I-64 OVER KANAWHA RIVER
EUGENE A. CARTER MEMORIAL BRIDGE +3

STEEL REPAIR S13
TRUSS GUSSET REPAIR

DESIGNED	DATE
DRAWN	
CHECKED	
REVIEWED	

HDR ENGINEERING INC.
CONSULTING ENGINEERS
CHARLESTON, WV
681-341-6100

SHEET OF

BRIDGE NO. 2563.6

SNOLEN $DD-MMM-YYYY HH:MM$ pw://pwhdruseas02.intranet.hdr:HDR_US_East_02/Documents/WV_DOT/WVDOT-Eugene_Carter_Bridge_3/6.0_CAD_BIM/6.2_WIP/HDR/6.2.2_Sheet_Files/23_Structure/Reference/str_ref_bdr_Eugene Carter Memorial.dgn

PROJECT NUMBERS		DISTRICT	COUNTY	SHEET NO.	TOTAL
STATE	FEDERAL				
S320-64-57.44 00	NHPP-0064 (497)D	1	KANAWHA		

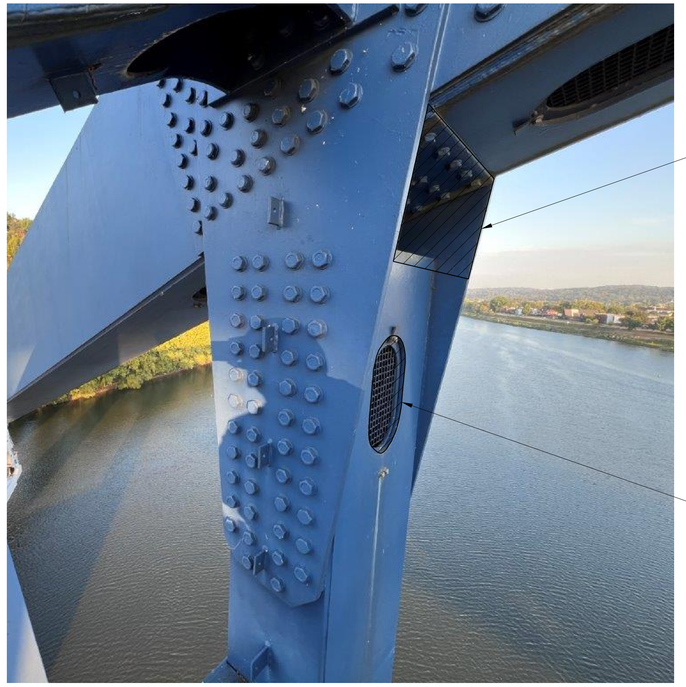

CLOSE OFF OPENINGS AT TOP CHORDS WITH SHEET METAL. CAULK SHEET METAL AGAINST THE TRUSS TOP CHORDS AND GUSSET PLATES TO PREVENT WATER INFILTRATIONS

REPLACE THE BIRD SCREENS AT TOP MANHOLES ON BOTH SIDES OF TRUSS VERTICALS WITH A SOLID PLATE TO PREVENT WATER INFILTRATION.

REPAIR S14 CONCEPT

SPAN 7EB - SOUTH EXTERIOR TRUSS AT U2 SHOWN OTHER LOCATIONS SIMILAR

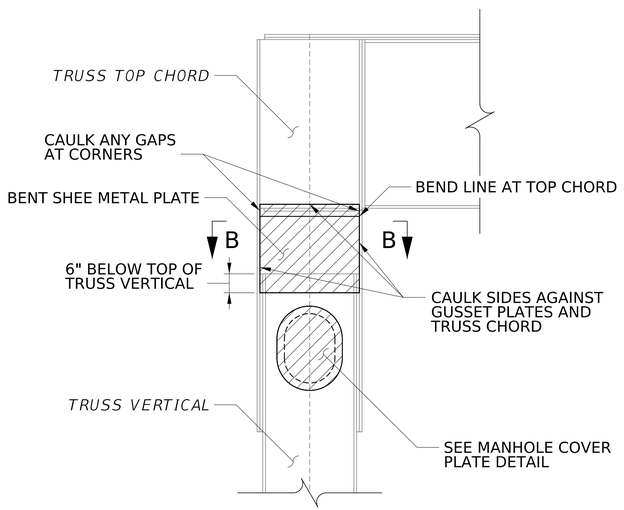

REPAIR S14 - VIEW A-A

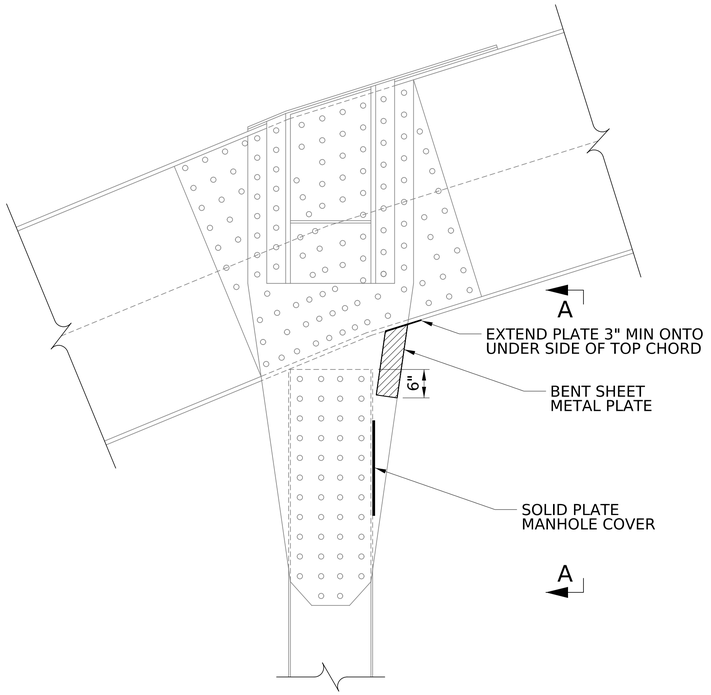

REPAIR S14 SOUTH EXTERIOR TRUSS AT U2

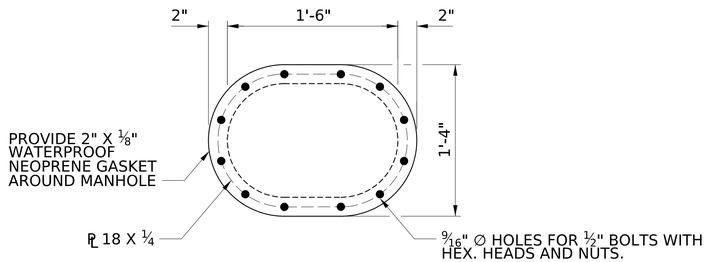

MANHOLE COVER PLATE DETAIL

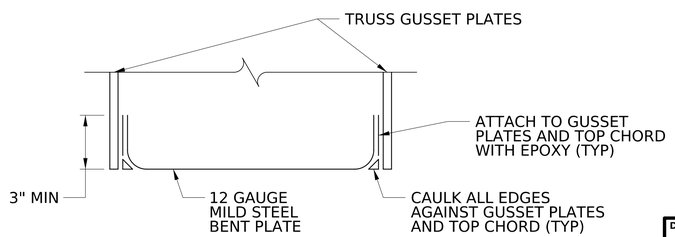

SECTION B-B

DRAWING TITLE NOTE

REPAIR S14 - ESTIMATED QUANTITIES:

LOCATIONS - SEE FRAMING PLANS SHEETS XX TO XX.

FOR TOTAL QUANTITIES SEE TABLE SHEET XX.

ALL LOCATIONS ARE NOT SHOWN IN PHOTOS.

REPAIR S14 - NOTES:

1. DETAILS SHOWN THIS SHEET ARE FOR EXTERIOR TRUSS JOINT U2. OTHER JOINTS ARE SIMILAR AS SHOWN ON SHEETS XX.
2. TAKE CARE TO SEAL ALL SEAMS BETWEEN BENT SHEET METAL PLATE AND TRUSS GUSSET PLATES AND TOP CHORD TO PREVENT WATER INFILTRATION.
3. PROVIDE A TIGHT SEAL AT NEOPRENE GASKET BETWEEN MANHOLE COVER PLATE AND TRUSS VERTICALS TO PREVENT WATER INFILTRATION.

NOTES:

1. FOR GENERAL NOTES, SEE SHEETS X AND X.
2. WORK THIS SHEET WITH SHEET XX.

NO.	REVISION	DATE	BY

WEST VIRGINIA DEPARTMENT OF TRANSPORTATION
DIVISION OF HIGHWAYS
ENGINEERING DIVISION

I-64 OVER KANAWHA RIVER
EUGENE A. CARTER MEMORIAL BRIDGE +3
STEEL REPAIR S14
MISC. TRUSS REPAIR (1 OF 2)

DESIGNED	DATE
KMO	11/25
DRAWN	
AFMO	11/25
CHECKED	
REVIEWED	

HDR ENGINEERING INC.
CONSULTING ENGINEERS
CHARLESTON, WV
681-341-6100

SHEET OF

BRIDGE NO. 2563.6

pw://pwhdruseas02.intranet.hdr:HDR_US_East_02/Documents/WV_DOT/WVDOT-Eugene_Carter_Bridge_3/6.0_CAD_BIM/6.2_WIP/HDR/6.2.2_Sheet_Files/23_Structure/3.242 Steel Repair S14 - Misc. Truss Repair (1 of 2).dgn
$DD-MMM-YYYY HH:MM$
SNOLEN

PROJECT NUMBERS		DISTRICT	COUNTY	SHEET NO.	TOTAL
STATE	FEDERAL				
S320-64-57.44 00	NHPP-0064 (497)D	1	KANAWHA		

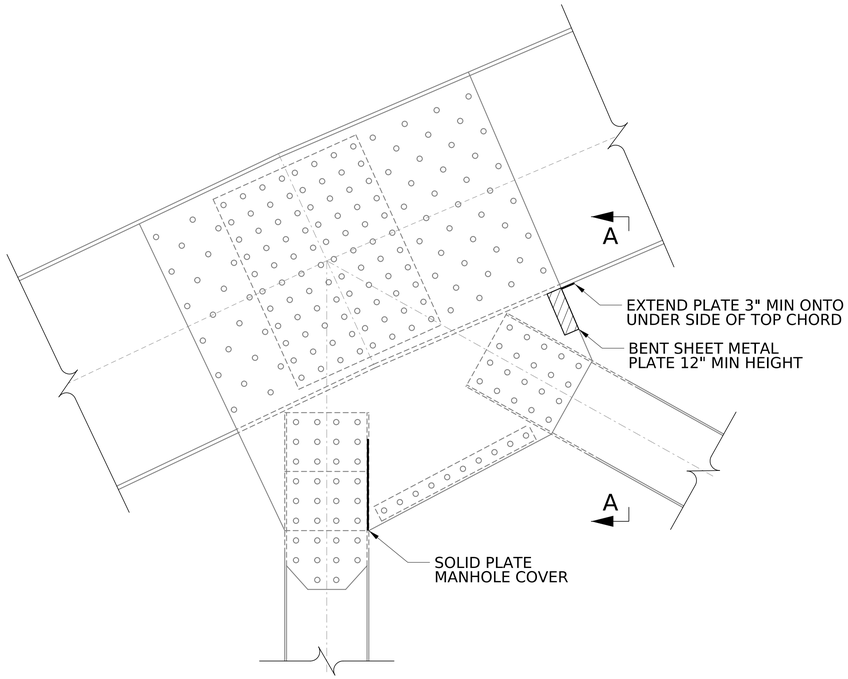

REPAIR S14 - SOUTH EXTERIOR TRUSS AT U1

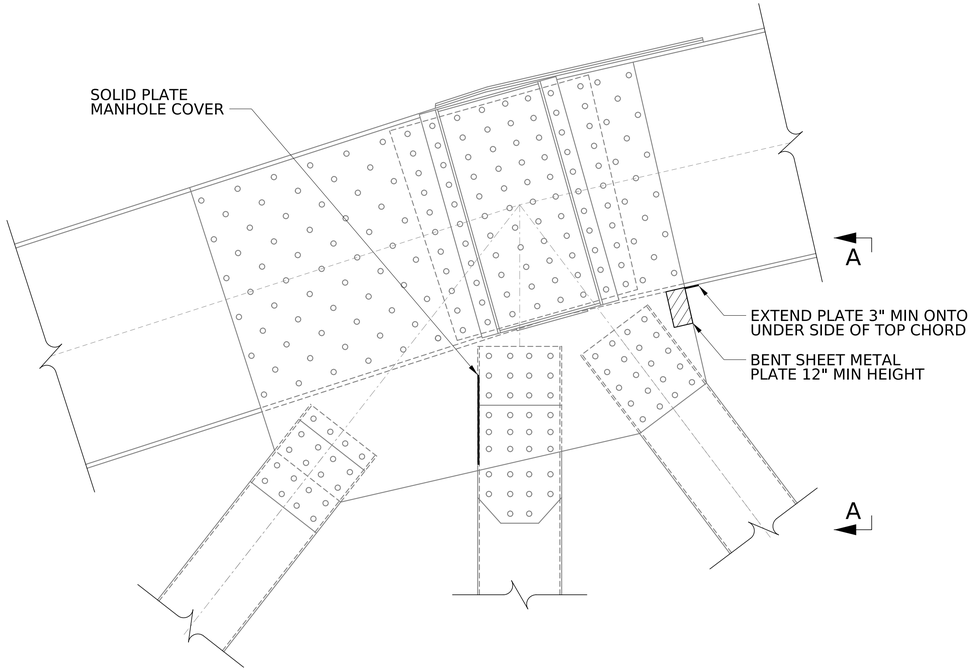

REPAIR S14 - SOUTH EXTERIOR TRUSS AT U3

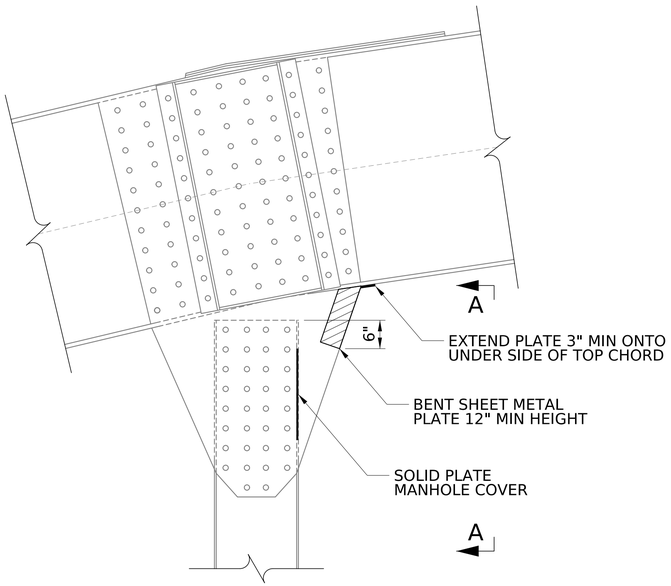

REPAIR S14 - SOUTH EXTERIOR TRUSS AT U4

NOTES:

1. FOR GENERAL NOTES, SEE SHEETS X AND X.
2. FOR SECTIONS AND MANHOLE COVER PLATE DETAILS, SEE SHEET XX.
3. FOR REPAIR S14 QUANTITIES AND NOTES, SEE SHEET XX.

NO.	REVISION	DATE	BY

WEST VIRGINIA DEPARTMENT OF TRANSPORTATION
DIVISION OF HIGHWAYS
ENGINEERING DIVISION

I-64 OVER KANAWHA RIVER
EUGENE A. CARTER MEMORIAL BRIDGE +3

STEEL REPAIR S14
MISC. TRUSS REPAIR (2 OF 2)

DESIGNED	KMO	DATE	11/25
DRAWN	AFMO		11/25
CHECKED			
REVIEWED			

HDR ENGINEERING INC.
CONSULTING ENGINEERS
CHARLESTON, WV
681-341-6100

SHEET OF

BRIDGE NO. 2563.6

pw://pwhdruseas02.intranet.hdr:HDR_US_East_02/Documents/WV_DOT/WVDOT-Eugene_Carter_Bridge_3/6.0_CAD_BIM/6.2_WIP/HDR/6.2.2_Sheet_Files/23_Structure/3.243 Steel Repair S14 - Misc. Truss Repair (2 of 2).dgn
$DD-MMM-YYYY HH:MM$
SNOLEN

PROJECT NUMBERS		DISTRICT	COUNTY	SHEET NO.	TOTAL
STATE	FEDERAL				
S320-64-57.44 00	NHPP-0064 (497)D	1	KANAWHA		

REPAIR S15

SPAN 3 WB G1 - WELD CRACK AT TRANSVERSE STIFFENER

REPAIR S15

SPAN 3 WB G4 - WELD CRACK AT TRANSVERSE STIFFENER

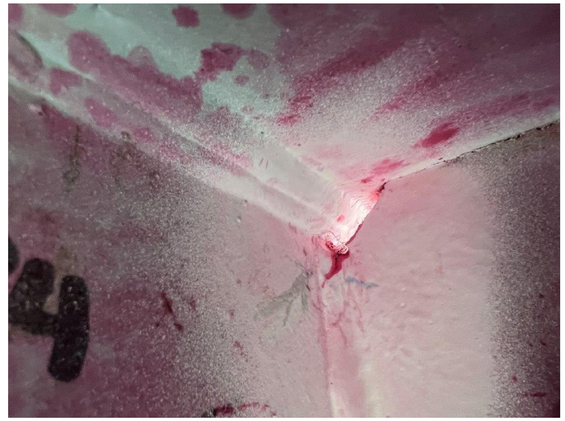

REPAIR S15

SPAN 4 WB G2 - WELD CRACK AT CONNECTION PLATE

REPAIR S15

SPAN 4 WB G2 - WELD CRACK AT WEB AND CONNECTION PLATE

REPAIR S15

SPAN 4 WB G2 - WELD CRACK AT FLANGE AND CONNECTION PLATE

REPAIR S15

SPAN 4 WB G2 - WELD CRACK AT WEB AND CONNECTION PLATE

REPAIR S15

SPAN 4 WB G2 - WELD CRACK AT WEB AND CONNECTION PLATE

REPAIR S15

SPAN 5 WB G3 - WELD CRACK AT WEB AND CONNECTION PLATE

REPAIR S15 - ESTIMATED QUANTITIES:

LOCATIONS - SEE FRAMING PLANS SHEETS XX TO XX.

FOR TOTAL QUANTITIES SEE TABLE SHEET XX.

ALL LOCATIONS ARE NOT SHOWN IN PHOTOS.

REPAIR S15 - NOTES:

1. INSPECT THE WEB GAP AREA CAREFULLY, LOOKING FOR INDICATIONS OF FATIGUE CRACKS EMANATING FROM THE TERMINATION OF THE TRANSVERSE CONNECTION PLATE WELDS OR GROWING ALONG THE WELD TOE OF THE FLANGE-TO-WEB WELD. USE MT METHOD TO CONFIRM THE CRACK LOCATION.
2. DRILL A HOLE AT EACH CRACK TIP. SEE SHEET XX FOR DRILLED HOLE LOCATIONS BASED ON THE CRACK LOCATION IDENTIFIED.
3. CUT BACK STIFFENER AND CONNECTION PLATES AS INDICATED FOR THE SPECIFIC REPAIR TYPE.
4. GRIND BORES, HOLE EDGES, AND VERTICAL AND HORIZONTAL CUTS SMOOTH USING A STONE AND FLAPPER WHEEL WITH 120 GRIT OR FINER TO REMOVE ANY NICKS OR GOUGES. PERFORM FINAL GRINDING IN THE DIRECTION OF CUTS.
5. PRIME AND PAINT PER THE PROJECT SPECIFICATIONS.

NOTES:

1. FOR GENERAL NOTES, SEE SHEETS XX AND XX.
2. WORK THIS SHEET WITH SHEET XX.

NO.	REVISION	DATE	BY

WEST VIRGINIA DEPARTMENT OF TRANSPORTATION
DIVISION OF HIGHWAYS
ENGINEERING DIVISION

I-64 OVER KANAWHA RIVER
EUGENE A. CARTER MEMORIAL BRIDGE +3
STEEL REPAIR S15
CRACK ARREST REPAIR (1 OF 2)

DESIGNED	KMO
DATE	11/25
DRAWN	AFMO
DATE	11/25
CHECKED	
DATE	
REVIEWED	
DATE	

HDR ENGINEERING INC.
CONSULTING ENGINEERS
CHARLESTON, WV
681-341-6100

SHEET
OF
BRIDGE NO.
2563.6

SNOLEN $DD-MMM-YYYY HH:MM$ pw://pwhdruseas02.intranet.hdr:HDR_US_East_02/Documents/WV_DOT/WVDOT-Eugene_Carter_Bridge_3/6.0_CAD_BIM/6.2_WIP/HDR/6.2_Sheet_Files/23_Structure/3.245 Steel Repair S15 - Crack Arrest Repair (1 of 2).dgn

PROJECT NUMBERS		DISTRICT	COUNTY	SHEET NO.	TOTAL
STATE	FEDERAL				
S320-64-57.44 00	NHPP-0064 (497)D	1	KANAWHA		

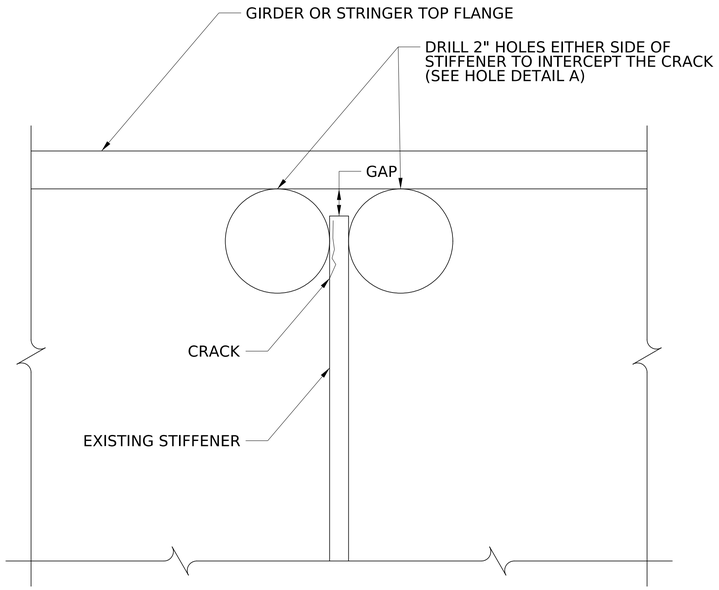

REPAIR S15 - AT TRANSVERSE STIFFENER

(WITH OR WITHOUT GAP)

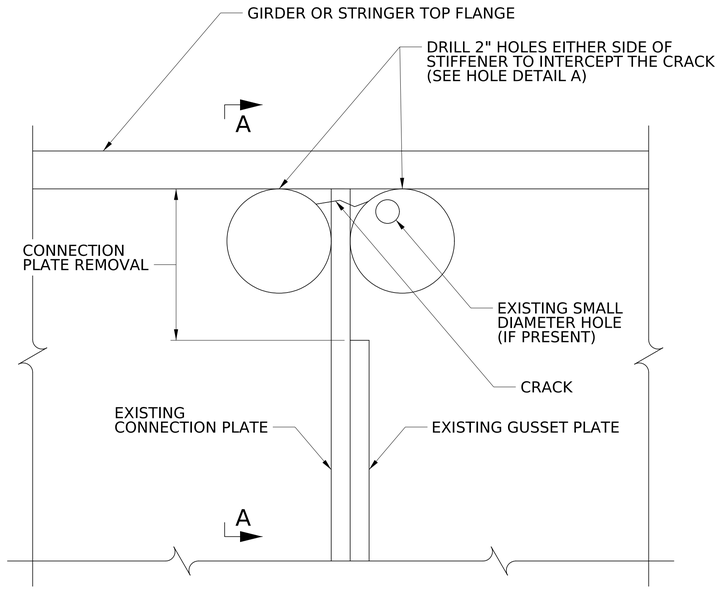

REPAIR S15 - CONNECTION PLATE

(NOT TO SCALE)

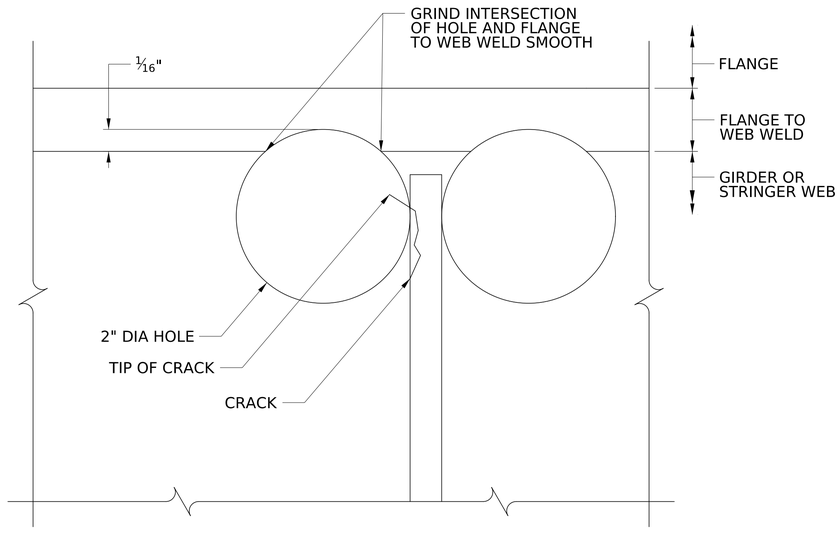

HOLE DETAIL A

(NOT TO SCALE)

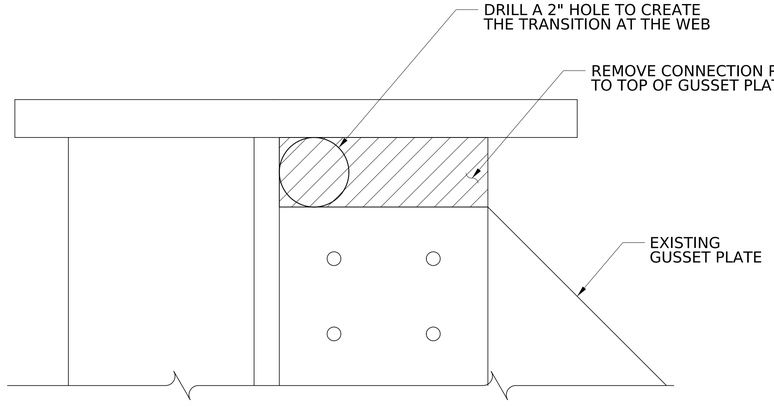

SECTION A-A CONNECTION PLATE REMOVAL

(NOT TO SCALE)

NOTES:

1. FOR GENERAL NOTES, SEE SHEETS XX AND XX.
2. FOR REPAIR S15 QUANTITIES AND NOTES, SEE SHEET XX.

NO.	REVISION	DATE	BY

WEST VIRGINIA DEPARTMENT OF TRANSPORTATION
DIVISION OF HIGHWAYS
ENGINEERING DIVISION

I-64 OVER KANAWHA RIVER
EUGENE A. CARTER MEMORIAL BRIDGE +3

STEEL REPAIR S15
CRACK ARREST REPAIR (2 OF 2)

DESIGNED	KMO	11/25
DRAWN	AFMO	11/25
CHECKED		
REVIEWED		

HDR ENGINEERING INC.
CONSULTING ENGINEERS
CHARLESTON, WV
681-341-6100

SHEET OF

BRIDGE NO. 2563.6

SNOLEN $DD-MMM-YYYY HH:MM$ pw://pwhdruseas02.Intranet.hdr:HDR_US_East_02/Documents/WV_DOT/WVDOT-Eugene_Carter_Bridge_3/6.0_CAD_BIM/6.2_WIP/HDR/6.2.2_Sheet_Files/23_Structure/3.246 Steel Repair S15 - Crack Arrest Repair (2 of 2).dgn

PROJECT NUMBERS		DISTRICT	COUNTY	SHEET NO.	TOTAL
STATE	FEDERAL				
S320-64-57.44 00	NHPP-0064 (497)D	1	KANAWHA		

REPAIR S-16 - ESTIMATED QUANTITIES

LOCATIONS (FRAMING PLAN): 16
STRUCTURAL STEEL ---------- 225 LBS
⅞" DIA HS BOLT ---------- 32 EA

ESTIMATED QUANTITIES ARE PER LOCATION

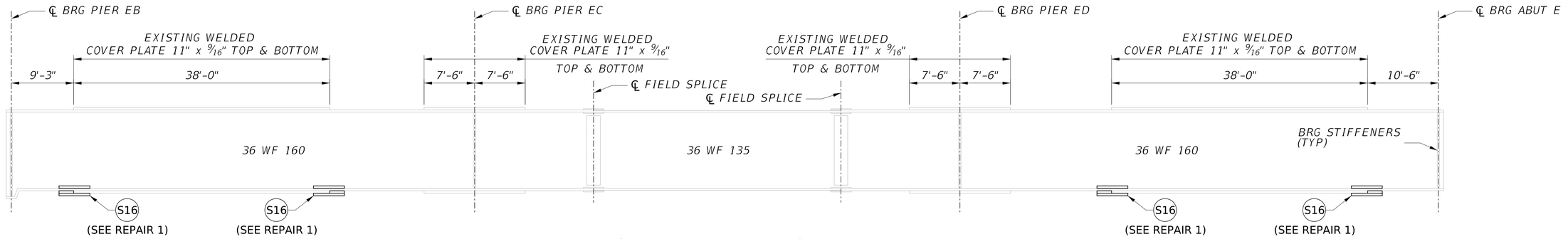

GIRDER ELEVATION

NOT TO SCALE
GIRDER EG1 THRU EG4

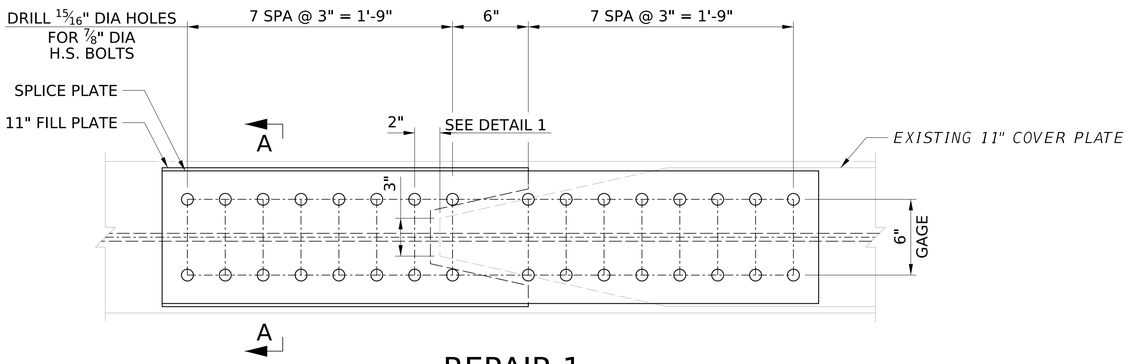

REPAIR 1

NOT TO SCALE
SPLICE AT END OF EXISTING BOTTOM FLANGE WELDED COVER PLATE
4 AREAS REQUIRED EACH GIRDER

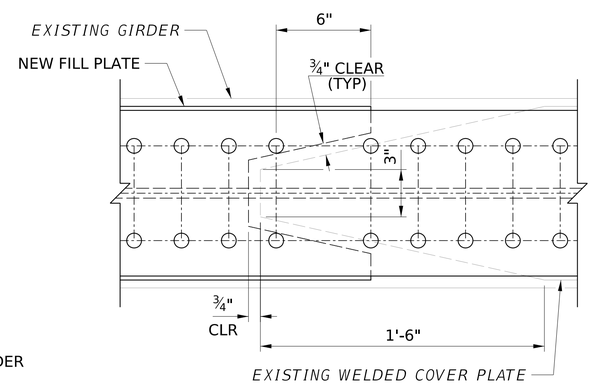

DETAIL 1

NOT TO SCALE

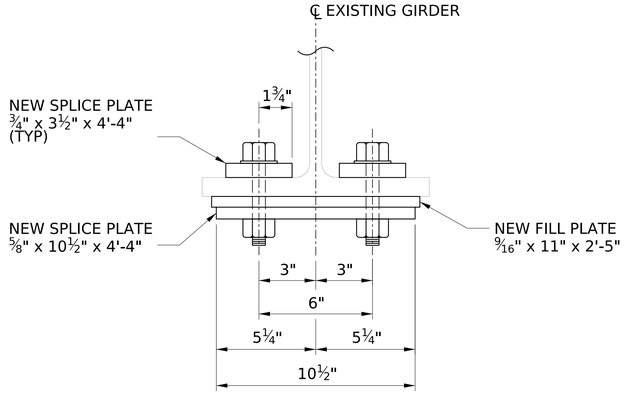

SECTION A-A

NOT TO SCALE

S-16 REPAIR PROCEDURE

1. COORDINATE INSTALLATION OF NEW SPLICE PLATE FATIGUE RETROFIT TO OCCUR AFTER THE EXISTING DECK REMOVAL AND PRIOR TO PLACEMENT OF NEW DECK.
2. FIELD VERIFY ALL DIMENSIONS PRIOR TO FABRICATION.
3. BLAST CLEAN AND PRIME EXISTING MEMBERS WITHIN SPLICE PLATE ZONES.
4. USING THE OUTER SPLICE PLATE AS A TEMPLATE, FIELD DRILL BOLT HOLES IN THE EXISTING GIRDER BOTTOM FLANGE, EXISTING COVER PLATE, NEW FILLER PLATE AND NEW INNER SPLICE PLATE.
5. FASTEN THE NEW SPLICE PLATE FATIGUE RETROFIT USING NEW HIGH STRENGTH BOLTS.

NOTES:

1. FOR GENERAL NOTES, SEE SHEETS XX THRU XX.
2. SEE FRAMING PLAN FOR NEW SPLICE PLATE FATIGUE RETROFIT LOCATIONS.
3. ALL BOLTS SHALL BE ⅞" DIAMETER ASTM F3125 GRADE A325, HIGH STRENGTH BOLTS IN STANDARD HOLES.
4. EXCLUDE THREADS OF SPLICE PLATE BOLTS FROM SHEAR PLANE.
5. BOLTED CONNECTIONS DESIGNED WITH CLASS B FAYING SURFACE.
6. ALL STRUCTURAL STEEL SHALL MEET THE REQUIREMENTS OF AASHTO M270 GRADE 50.

NO.	REVISION	DATE	BY

WEST VIRGINIA DEPARTMENT OF TRANSPORTATION
DIVISION OF HIGHWAYS
ENGINEERING DIVISION

I-64 OVER KANAWHA RIVER
EUGENE A. CARTER MEMORIAL BRIDGE +3

STEEL REPAIR S16 FATIGUE RETROFIT RAMP E COVER PLATES

DESIGNED	MAB
DATE	12/25
DRAWN	DJC
DATE	12/25
CHECKED	
DATE	
REVIEWED	
DATE	

Mead & Hunt

MEAD & HUNT INC.
CONSULTING ENGINEERS
CHARLESTON, WV
304-345-6712

SHEET OF
BRIDGE NO. 2563.6

1420djc $DD-MMM-YYYY HH:MM$ X:\3241600\251911.01\TECH\Structures\Ramp E\sheets\str_gir_001_Ramp E_Eugene Carter Memorial Bridge.dgn

PROJECT NUMBERS		DISTRICT	COUNTY	SHEET NO.	TOTAL
STATE	FEDERAL				
S320-64-57.44 00	NHPP-0064 (497)D	1	KANAWHA		

DETAILS UNDER DEVELOPMENT
WILL INCLUDE CRITERA AND
PHOTOS OF WHEN TO REPLACE
MISCELLANEOUS BOLTS

NO.	REVISION	DATE	BY

WEST VIRGINIA DEPARTMENT OF TRANSPORTATION
DIVISION OF HIGHWAYS
ENGINEERING DIVISION

I-64 OVER KANAWHA RIVER
EUGENE A. CARTER MEMORIAL BRIDGE +3

STEEL REPAIR S17
REPLACE BOLT

DESIGNED	DATE
DRAWN	
CHECKED	
REVIEWED	

HDR ENGINEERING INC.
CONSULTING ENGINEERS
CHARLESTON, WV
681-341-6100

SHEET OF

BRIDGE NO. 2563.6

SNOLEN $DD-MMM-YYYY HH:MM$ pw://pwhdruseas02.intranet.hdr:HDR_US_East_02/Documents/WV_DOT/WVDOT-Eugene_Carter_Bridge_3/6.0_CAD_BIM/6.2_WIP/HDR/6.2.2_Sheet_Files/23_Structure/Reference/str_ref_bdr_Eugene Carter Memorial.dgn

PROJECT NUMBERS		DISTRICT	COUNTY	SHEET NO.	TOTAL
STATE	FEDERAL				
S320-64-57.44 00	NHPP-0064 (497)D	1	KANAWHA		

REPAIR S18

SPAN 7EB - STRINGER S18 AT FB3

REPAIR S18

SPAN 7 EB - FLOORBEAM 3 AT SOUTH EXTERIOR TRUSS

REPAIR S18

SPAN 7 EB - FB4 AT CENTER TRUSS

REPAIR S18

SPAN 7 EB - FB6 AT CENTER TRUSS

REPAIR S18

SPAN 7 WB - FB8 AT CENTER TRUSS

REPAIR S18 - ESTIMATED QUANTITIES:

LOCATIONS - SEE FRAMING PLANS SHEETS XX TO XX.

FOR TOTAL QUANTITIES SEE TABLE SHEET XX.

ALL LOCATIONS ARE NOT SHOWN IN PHOTOS.

REPAIR S18 - PROCEDURE:

1. PRIOR TO BLASTING AND PAINTING, REMOVE WELDED ATTACHMENTS OR TACK WELDS BY GRINDING.
2. PERFORM FINAL GRINDING OF SURFACE WITH A STONE WHEEL AND REMOVE.
3. ALL GRINDING TO BE COMPLETED PARALLEL TO THE DIRECTION OF THE PRIMARY STRESS IN THE MEMBER.
4. AFTER WELD IS REMOVED, PERFORM DYE PENETRANT TESTING TO VERIFY THAT THERE ARE NO CRACKS PRESENT AT THE WELD SITE.
5. IF A CRACK IS FOUND NOTIFY THE DEPARTMENT REPRESENTATIVE.

REPAIR S18 - NOTES:

1. SPECIFIC LOCATIONS THAT HAVE BEEN IDENTIFIED FOR REMOVAL OF A WELDED ATTACHMENT OR TACK WELD ARE INDICATED ON REPAIR LOCATION SHEETS. AN ADDITIONAL NUMBER OF WELDED ATTACHMENTS OR TACK WELD REMOVALS HAVE BEEN INCLUDED IN THE QUANTITY TABULATED, AND ARE TO BE DELINEATED BY THE DEPARTMENT REPRESENTATIVE IN THE FIELD, IF REQUIRED.
2. EXERCISE CAUTION TO AVOID NICKING AND GOUGING THE MEMBER DURING THE GRINDING OPERATION.

NOTES:

1. FOR GENERAL NOTES, SEE SHETS X AND X.
2. WORK THIS SHEET WITH SHEET XX.

NO.	REVISION	DATE	BY

WEST VIRGINIA DEPARTMENT OF TRANSPORTATION
DIVISION OF HIGHWAYS
ENGINEERING DIVISION

I-64 OVER KANAWHA RIVER
EUGENE A. CARTER MEMORIAL BRIDGE +3

STEEL REPAIR S18
REMOVE TACK WELD (1 OF 2)

DESIGNED	KMO
DATE	11/25
DRAWN	AFMO
DATE	11/25
CHECKED	
DATE	
REVIEWED	
DATE	

HDR ENGINEERING INC.
CONSULTING ENGINEERS
CHARLESTON, WV
681-341-6100

SHEET OF

BRIDGE NO. 2563.6

SNOLEN $DD-MMM-YYYY HH:MM$ pw://pwhdruseas02.bentley.hdr:HDR_US_East_02/Documents/WV_DOT/WVDOT-Eugene_Carter_Bridge_3/6.0_CAD_BIM/6.2_WIP/HDR/6.2.2_Sheet_Files/23_Structure/3.254 Steel Repair S18 - Remove Tack Weld (1 of 2)

PROJECT NUMBERS		DISTRICT	COUNTY	SHEET NO.	TOTAL
STATE	FEDERAL				
S320-64-57.44 00	NHPP-0064 (497)D	1	KANAWHA		

REPAIR S18

SPAN 7 EB - SOUTH EXTERIOR TRUSS AT U3

REPAIR S18

SPAN 7 EB - SOUTH EXTERIOR TRUSS AT U9

REPAIR S18

SPAN 7 EB - SOUTH EXTERIOR TRUSS AT L10

REPAIR S18

SPAN 7 - INTERIOR TRUSS AT U1

NOTES:

1. FOR GENERAL NOTES, SEE SHETS X AND X.
2. WORK THIS SHEET WITH SHEET XX.
3. FOR QUANTITIES, REPAIR PROCEDURE, AND REPAIR NOTES SEE SHEET XX.

NO.	REVISION	DATE	BY

WEST VIRGINIA DEPARTMENT OF TRANSPORTATION
DIVISION OF HIGHWAYS
ENGINEERING DIVISION

I-64 OVER KANAWHA RIVER
EUGENE A. CARTER MEMORIAL BRIDGE +3

STEEL REPAIR S18
REMOVE TACK WELD (2 OF 2)

DESIGNED	KMO
DATE	11/25
DRAWN	AFMO
DATE	11/25
CHECKED	
REVIEWED	

HDR ENGINEERING INC.
CONSULTING ENGINEERS
CHARLESTON, WV
681-341-6100

SHEET
OF
BRIDGE NO.
2563.6

$DD-MMM-YYYY HH:MM$
SNOLEN
pw://pwhdruseas02.intranet.hdr:HDR_US_East_02/Documents/WV_DOT/WVDOT-Eugene_Carter_Bridge_3/6.0_CAD_BIM/6.2_WIP/HDR/6.2.2_Sheet_Files/23_Structure/3.255 Steel Repair S18 - Remove Tack Weld (2 of 2)

PROJECT NUMBERS		DISTRICT	COUNTY	SHEET NO.	TOTAL
STATE	FEDERAL				
S320-64-57.44 00	NHPP-0064 (497)D	1	KANAWHA		

DETAILS UNDER DEVELOPMENT

NO.	REVISION	DATE	BY

WEST VIRGINIA DEPARTMENT OF TRANSPORTATION
DIVISION OF HIGHWAYS
ENGINEERING DIVISION

I-64 OVER KANAWHA RIVER
EUGENE A. CARTER MEMORIAL BRIDGE +3

STEEL REPAIR S20
CROSS GIRDER REPAIR RAMP F

DESIGNED	DATE
KVB	12/25
DRAWN	
DJC	12/25
CHECKED	
REVIEWED	

Mead & Hunt

MEAD & HUNT INC.
CONSULTING ENGINEERS
CHARLESTON, WV
304-345-6712

SHEET
OF
BRIDGE NO.
2563.6

1420djc $DD-MMM-YYYY HH:MM$ X:\324160025191 1.01\TECH\Structures\Ramp F\sheets\str_gir_001_Ramp F_Eugene Carter Memorial Bridge.dgn

PROJECT NUMBERS		DISTRICT	COUNTY	SHEET NO.	TOTAL
STATE	FEDERAL				
S320-64-57.44 00	NHPP-0064 (497)D	1	KANAWHA		

REPAIR S21

SPAN 7 LOOSE NAVIGATION PLATFORM

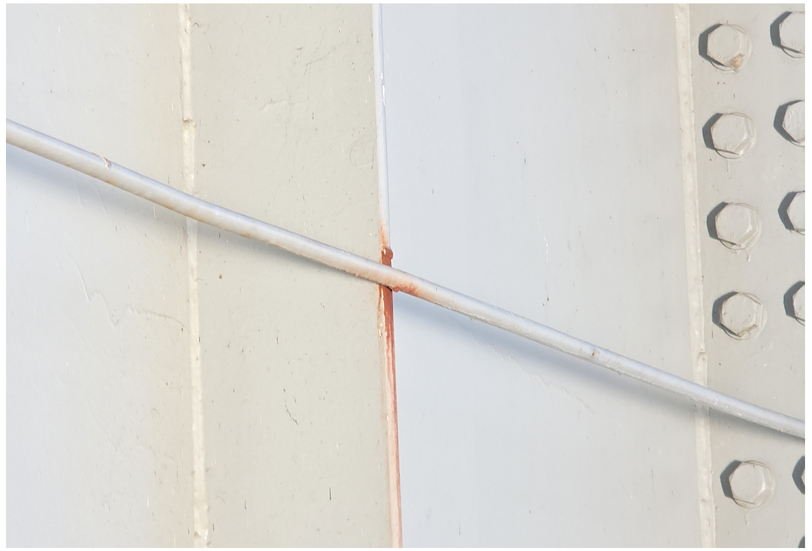

REPAIR S21

SPAN 7 WB FB8 - LOOSE INSPECTION RAILING

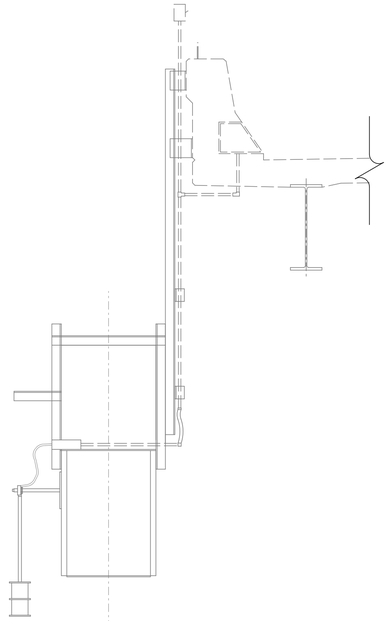

REPAIR S21

SPAN 7 NAVIGATION PLATFORM NEAR PP6

NOTES FOR S21 SPAN 7 NAVIGATION PLATFORM REPAIR:

1. REPLACE ANY DETERIORATED BOLTS IN KIND.
2. MAKE ALL MEMBERS SECURE.
3. PRIME AND PAINT PER THE PROJECT SPECIFICATIONS.

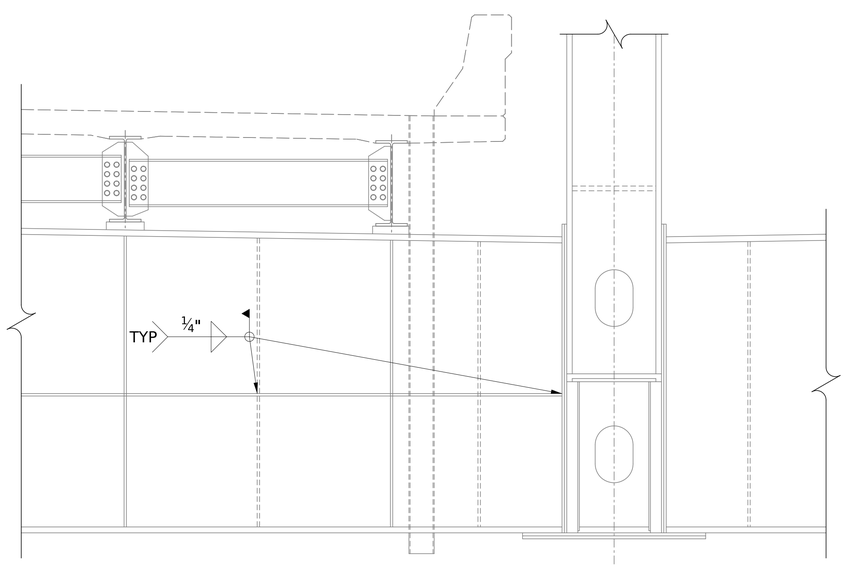

REPAIR S21

SPAN 7 FB1, FB6 AND FB8

NOTES FOR S21 SPAN 7 LOOSE HANDRAIL REPAIR:

1. REPLACE ANY DAMAGED OR MISSING HANDRAIL MEMBERS IN KIND.
2. WELD HANDRAILS TO STIFFENERS AND FLOORBEAM GUSSET PLATES AS INDICATED.
3. PRIME AND PAINT PER THE PROJECT SPECIFICATIONS.

REPAIR S21 - ESTIMATED QUANTITIES:

1. LOCATIONS - SEE FRAMING PLANS SHEETS XX TO XX.
2. FOR TOTAL QUANTITES SEE TABLE SHEET XX.
3. ALL LOCATIONS ARE NOT SHOWN IN PHOTOS.

NOTES:

1. FOR GENERAL NOTES, SEE SHEETS X AND X.

NO.	REVISION	DATE	BY

WEST VIRGINIA DEPARTMENT OF TRANSPORTATION
DIVISION OF HIGHWAYS
ENGINEERING DIVISION

I-64 OVER KANAWHA RIVER
EUGENE A. CARTER MEMORIAL BRIDGE +3
STEEL REPAIR S21
MISCELANEOUS STEEL REPAIR

DESIGNED	KMO	11/25
DRAWN	AFMO	11/25
CHECKED		
REVIEWED		

HDR ENGINEERING INC.
CONSULTING ENGINEERS
CHARLESTON, WV
681-341-6100

SHEET OF

BRIDGE NO. 2563.6

SNOLEN $DD-MMM-YYYY HH:MM$ pw://pwhdruseas02.intranet.hdr-HDR_US_East_02/Documents/WV_DOT/WVDOT-Eugene_Carter_Bridge_3/6.0_CAD_BIM/6.2_WIP/HDR/6.2.2_Sheet_Files/23_Structure/3.263 Steel Repair S21 - Misc. Steel Repair With Description

PROJECT NUMBERS		DISTRICT	COUNTY	SHEET NO.	TOTAL
STATE	FEDERAL				
S320-64-57.44 00	NHPP-0064 (497)D	1	KANAWHA		

③ MEASURE THE GAP BETWEEN THE END OF GUSSET PL TO GIRDER WEB FILLET WELD AND THE TOE OF THE ADJACENT DIAPHRAGM CONNECTION PL TO GIRDER WEB FILLET WELD. IF THE MINIMUM GAP MEASURED IS LESS THAN 3/8" PERFORM REPAIR SXX (SEE SHEET X). IF THE GAP IS 3/8" OR GREATER, NO REPAIR IS REQUIRED

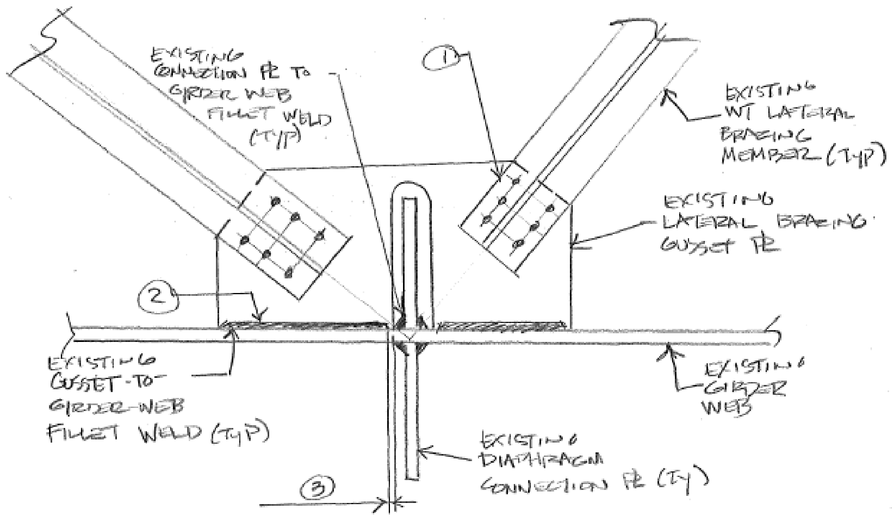

LATERAL BRACING REMOVAL AND INSPECTION

STEPS:

① UNBOLT AND REMOVE EXISTING LATERAL BRACING MEMBERS. FOR GUSSET PLS THAT REMAIN, BLAST & SPOT PAINT EXPOSED UNPAINTED EXISTING SURFACES

② INSPECT GUSSET PL TO GIRDER WEB FILLET WELDS WITH DYE PENETRANT PER ASTM E165. IF A CRACK IN THE GUSSET BASE METAL IS DETECTED, PERFORM REPAIR SXX (SEE SHEET X). IF A CRACK IS DETECTED IN THE GIRDER WEB BASE METAL, CONTACT THE ENGINEER BEFORE PROCEEDING. IF NO CRACKS EXIST, THE GUSSET PLATE CAN REMAIN.

③ REINSPECT REGION WITH DYE PENETRANT, NOTIFY ENGINEER IF MORE CRACKS ARE DETECTED, OTHERWISE SPOT PAINT BARE STEEL AS NEEDED.

KNOWN LOC'S: SPAN 5 EB G3 @ DIAPH 1 & 3

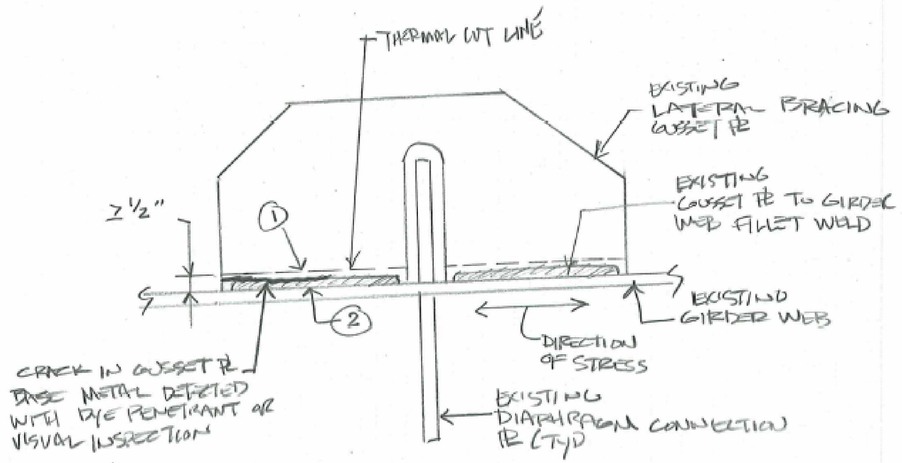

* LATERAL BRACING BOLT HOLES AND DIAPHRAGM CONNECTION PL FILLET WELDS NOT SHOWN FOR CLARITY.

REPAIR SXX - GUSSET PL REMOVAL

STEPS:

① REMOVE GUSSET PL TO LINE SHOWN. FOR THERMAL CUTTING METHODS, CUT LINE SHALL BE 1/2" MIN. FROM FACE OF GIRDER WEB

② REMOVE REMAINING PORTION OF GUSSET PL AND FILLET WELDS BY GRINDING TO A SMOOTH FINISH @ GIRDER WEB. GRIND IN DIRECTION OF STRESS.

DETAILS UNDER DEVELOPMENT

NO.	REVISION	DATE	BY

WEST VIRGINIA DEPARTMENT OF TRANSPORTATION
DIVISION OF HIGHWAYS
ENGINEERING DIVISION

I-64 OVER KANAWHA RIVER
EUGENE A. CARTER MEMORIAL BRIDGE +3

STEEL REPAIR S23 - REMOVE LATERAL BRACING MEMBER (2 OF 2)

DESIGNED	DATE
DRAWN	
CHECKED	
REVIEWED	

HDR ENGINEERING INC.
CONSULTING ENGINEERS
CHARLESTON, WV
681-341-6100

SHEET OF
BRIDGE NO. 2563.6

SNOLEN $DD-MMM-YYYY HH:MM$ pw://pwhdruseas02.intranet.hdr:HDR_US_East_02/Documents/WV_DOT/WVDOT-Eugene_Carter_Bridge_3/6.0_CAD_BIM/6.2_WIP/HDR/6.2.2_Sheet_Files/23_Structure/Reference/str_ref_bdr_Eugene Carter Memorial.dgn

PROJECT NUMBERS		DISTRICT	COUNTY	SHEET NO.	TOTAL
STATE	FEDERAL				
S320-64-57.44 00	NHPP-0064 (497)D	1	KANAWHA		

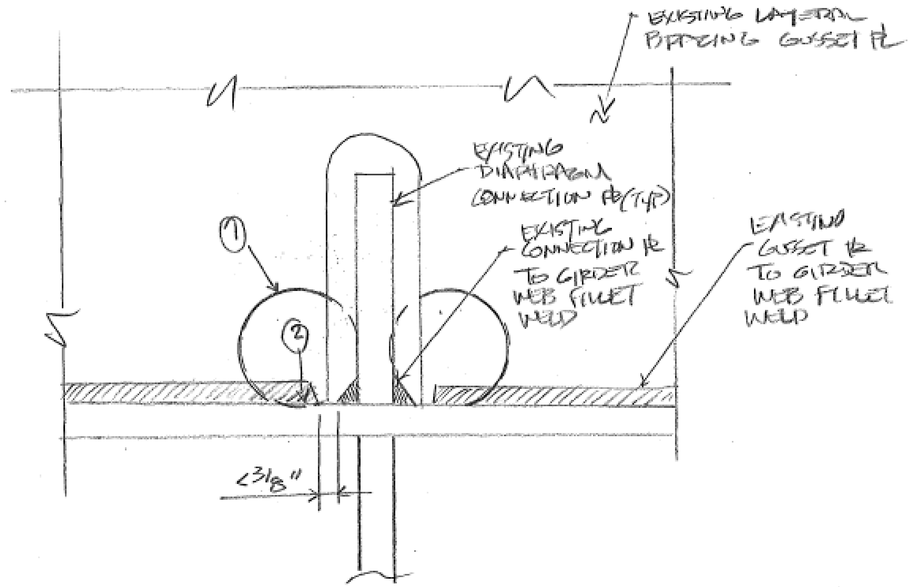

REPAIR SX4 - CORE HOLES

1. CORE 3" DIA HOLE THROUGH GUSSET PL & GUSSET-TO-WEB FILLET WELD AS SHOWN.
2. USE BURR GRINDER TO REMOVE ANY REMAINING GUSSET PL OR FILLET WELD TO A SMOOTH RADIUS. DO NOT GOUGE GIRDER WEB.
3. POLISH ALL GROUND AREAS WITH SANDING WHEEL TO ANSI ROUGHNESS OF 500 OR LESS.
4. SPOT PAINT BARE METAL AS NEEDED.

DETAILS UNDER DEVELOPMENT

NO.	REVISION	DATE	BY

WEST VIRGINIA DEPARTMENT OF TRANSPORTATION
DIVISION OF HIGHWAYS
ENGINEERING DIVISION

I-64 OVER KANAWHA RIVER
EUGENE A. CARTER MEMORIAL BRIDGE +3

STEEL REPAIR S23 - REMOVE LATERAL BRACING MEMBER (1 OF 2)

DESIGNED	DATE
DRAWN	
CHECKED	
REVIEWED	

HDR ENGINEERING INC.
CONSULTING ENGINEERS
CHARLESTON, WV
681-341-6100

SHEET OF

BRIDGE NO. 2563.6

SNOLEN $DD-MMM-YYYY HH:MM$ pw://pwhdruseas02.intranet.hdr:HDR_US_East_02/Documents/WV_DOT/WVDOT-Eugene_Carter_Bridge_3/6.0_CAD_BIM/6.2_WIP/HDR/6.2.2_Sheet_Files/23_Structure/Reference/str_ref_bdr_Eugene Carter Memorial.dgn

PROJECT NUMBERS		DISTRICT	COUNTY	SHEET NO.	TOTAL
STATE	FEDERAL				
S320-64-57.44 00	NHPP-0064 (497)D	1	KANAWHA		

THE FOLLOWING ADDITIONAL SHEETS ARE TO BE DEVELOPED ALONG WITH THE APPROXIMATE NUMBER OF SHEETS:

REPAIR P1 - PAINTING DETAILS - 1 SHEET (POSSIBLY)
REPAIR P2 - PACK RUST REPAIR - 1 SHEET - SIMILAR TO DETAILS SHOWN ON THIS SHEET
SIGN SUPPORTS ON TRUSS M1 - 2 SHEETS
SIGN SUPPORTS ON APPROACHES - 2 SHEETS

REPAIR P2 PROCEDURE

1. REMOVE HEAVY CORROSION (RUST SCALE) AND PACK RUST, TO THE LIMITS SHOWN IN THE DETAILS, BY DESCALING POWER TOOLS TO A MINIMUM DEPTH OF ½".
2. ABRASIVE BLAST THE AFFECTED AREAS IN ACCORDANCE WITH SECTION 688.2.2.2 AND 688.2.2.2.3 OF THE STANDARD SPECIFICATIONS.
3. CLEAN BLASTED SURFACES USING DRY, CLEAN COMPRESSED AIR IN ACCORDANCE WITH 688.2.2.4 OR BY OTHER METHODS APPROVED BY THE ENGINEER. REMOVE ALL TRACES OF BLAST RESIDUE, DIRT, AND DEBRIS FROM THE AFFECTED AREA.
4. BRUSH APPLY ONE FLOOD COAT OF EPOXY PENETRATING SEALER TO ALL PACK RUST AREAS.
5. APPLY 3-10 MILS OF EPOXY ZINC PRIMER TO ALL BLAST-CLEANED SURFACES. APPLY THE EPOXY ZINC PRIMER IN A MINIMUM OF 2 COATS AND PER THE MANUFACTURERS RECOMMENDATIONS.

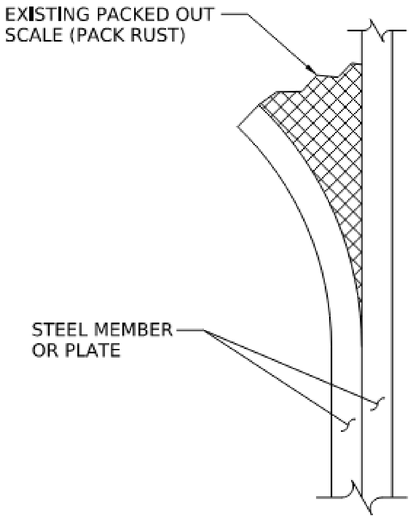

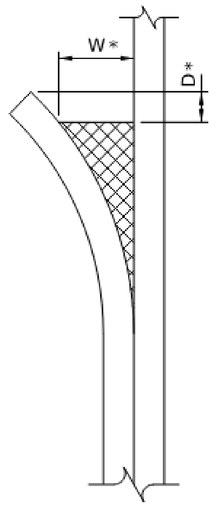

EXISTING CONDITION

REPAIR

PACK RUST REPAIR

*SEE TABLE BELOW

PACK RUST REMOVAL LIMIT	
W	MIN D
>¼"	1"
≤¼"	½"

NOTES:

1. FOR GENERAL NOTES, SEE SHEETS 5 THRU 7.
2. EXERCISE EXTREME CARE TO AVOID NICKING OR GOUGING THE STEEL DURING PACK RUST REMOVAL OPERATIONS. IF NICKS OR GOUGES OCCUR, THE ENGINEER MAY SUSPEND ACTIVITIES UNTIL APPROPRIATE ADJUSTMENTS TO THE PROCEDURE ARE MADE TO PREVENT RECURRENCE.
3. REMOVED PAINT AND RUST MATERIAL MAY CONTAIN LEAD. THE CONTRACTOR MUST ENSURE THAT SUCH MATERIAL IS CAPTURED (I.E THROUGH THE USE OF VACUUM SHROUDED POWER TOOLS OR OTHER CONTAINMENT DEVICES).
4. FOR ADDITIONAL LOCATIONS OF PACK RUST IDENTIFIED IN THE FIELD, NOTIFY THE ENGINEER FOR FURTHER INSTRUCTION.
5. PACK RUST REPAIR IS PAID FOR BY ITEM 615075-003, MISCELLANEOUS BRIDGE WORK, PACK RUST REMOVAL (REPAIR X2), LF. TOTAL ADJUSTED REPAIR QUANTITY INCLUDES 30% CONTINGENCY.

NO.	REVISION	DATE	BY

WEST VIRGINIA DEPARTMENT OF TRANSPORTATION
DIVISION OF HIGHWAYS
ENGINEERING DIVISION

I-64 OVER KANAWHA RIVER
EUGENE A. CARTER MEMORIAL BRIDGE +3

ADDITIONAL SHEETS TO BE DEVELOPED

DESIGNED	DATE
DRAWN	
CHECKED	
REVIEWED	

HDR ENGINEERING INC.
CONSULTING ENGINEERS
CHARLESTON, WV
681-341-6100

SHEET OF
BRIDGE NO. 2563.6

SNOLEN $DD-MMM-YYYY HH:MM$ pw://pwhdruseas02.Intranet.hdr:HDR_US_East_02/Documents/WV_DOT/WVDOT-Eugene_Carter_Bridge_3/6.0_CAD_BIM/6.2_WIP/HDR/6.2.2_Sheet_Files/23_Structure/Reference/str_ref_bdr_Eugene Carter Memorial.dgn

PROJECT NUMBERS		DISTRICT	COUNTY	SHEET NO.	TOTAL
STATE	FEDERAL				
S320-64-57.44 00	NHPP-0064 (497)D	1	KANAWHA		

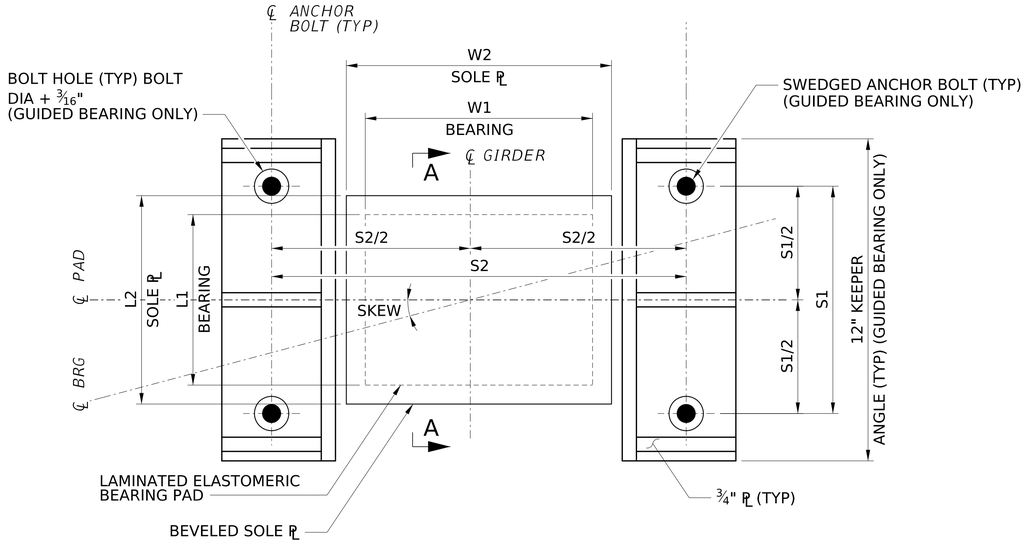

REPAIRS B1 AND B2 GUIDED BEARING PLAN

GUIDED BEARING SHOWN (REPAIR B1), NON-GUIDED BEARING SIMILAR (REPAIR B2)
(REPAIR B2, WITHOUT KEEPER ANGLES OR ANCHOR BOLTS)

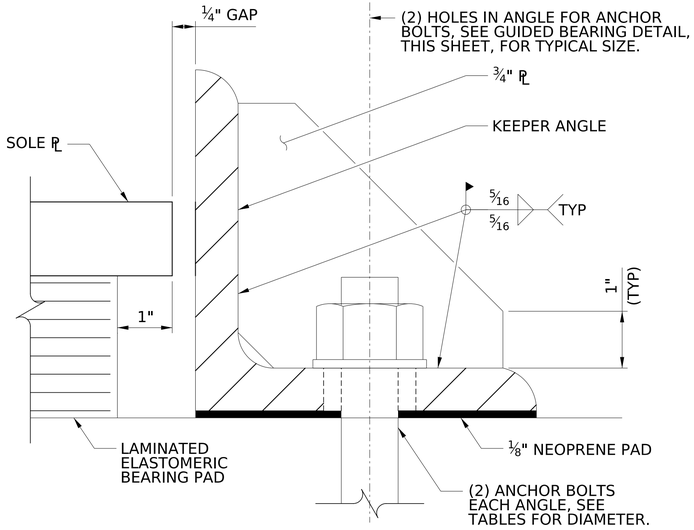

DETAIL 1

(NOT TO SCALE)

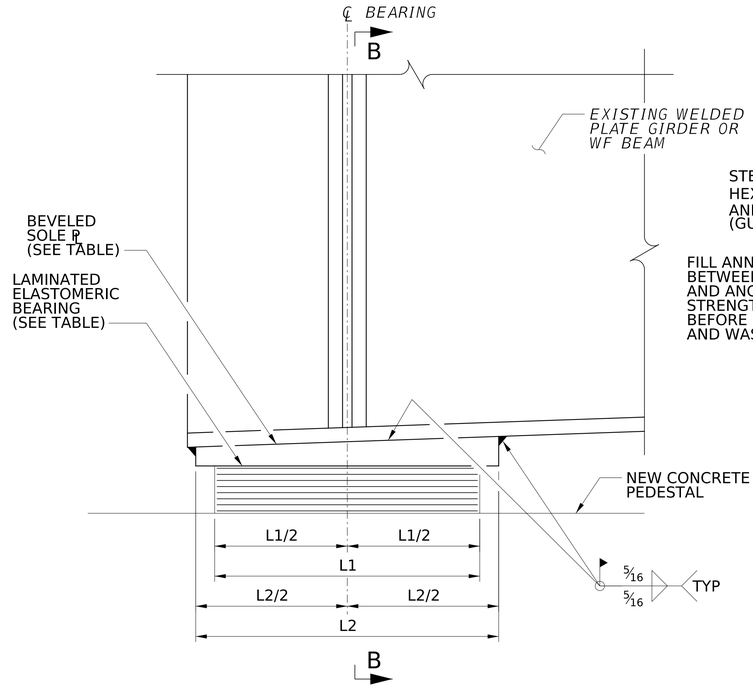

SECTION A-A

GIRDER END BEARING SHOWN, CONTINUOUS GIRDER BEARING SIMILAR
(NOT TO SCALE)

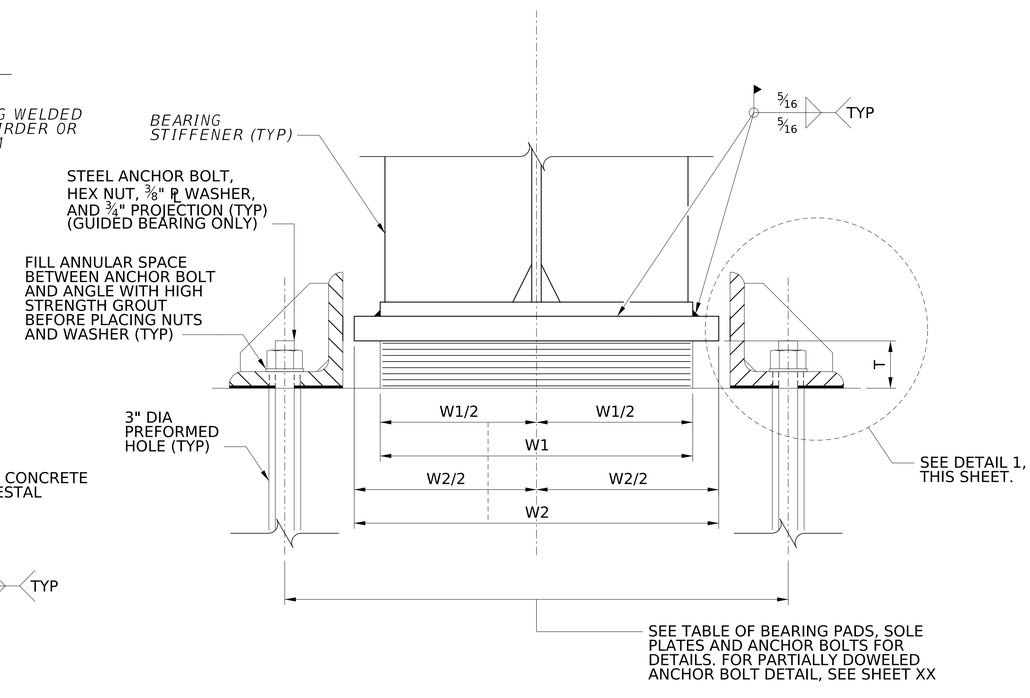

SECTION B-B

GUIDED BEARING SHOWN (REPAIR B1), NON-GUIDED BEARING SIMILAR (REPAIR B2)
(REPAIR B2, WITHOUT KEEPER ANGLES OR ANCHOR BOLTS).
(NOT TO SCALE)

BEARING ASSEMBLY NOTES:

1. ALL BEARING PADS ARE TO BE MOLDED TO DESIGN DIMENSIONS. CUTTING TO SIZE AFTER FABRICATION IS PROHIBITED.
2. HOLES ARE NOT PERMITTED IN ELASTOMERIC BEARINGS.
3. PROVIDE NEOPRENE WITH SHEAR MODULUS 0.095 KSI.
4. PROVIDE MINIMUM LOW-TEMPERATURE NEOPRENE GRADE 3.
5. PROVIDE MATERIALS AND WORKMANSHIP IN ACCORDANCE WITH CONSTRUCTION MANUAL 2022 REVISION, AASHTO/AWS BRIDGE WELDING CODE AND CONTRACT SPECIFICATIONS.
6. PROVIDE ASTM F1554, GRADE 105, HOT DIPPED GALVANIZED ANCHOR BOLTS. SET AS INDICATED.
7. PROVIDE STRUCTURAL STEEL CONFORMING TO AASHTO M 270/M 270M, GRADE 50 (ASTM A 709/A 709M, GRADE 50) UNLESS OTHERWISE NOTED.
8. PROVIDE PLATE WASHERS OF SUFFICIENT SIZE TO COVER THE ANCHOR BOLT HOLES IN THE KEEPER ANGLES. WASHERS MAY BE CLIPPED IF REQUIRED.
9. AFTER DRILLING OF ANCHOR BOLT HOLES, RINSE CLEAN WITH WATER, DRY, AND ROUGHEN HOLE BEFORE FILLING WITH NON-SHRINK GROUT.
10. MARK THICKER END OF BEVELED SOLE PLATES TO IDENTIFY THICKER END IN FIELD.
11. PAINT ALL STEEL SURFACES IN ACCORDANCE WITH SECTION 687 AND 688. SHOP PAINT WHEREVER POSSIBLE.
12. PREPARE BEARING AREAS IN ACCORDANCE WITH SECTION 615.2.3.5. DO NOT APPLY EPOXY COATING TO THE BEARING SURFACES WITHIN 2" OF THE BEARING PAD AND NEOPRENE SPONGE.
13. THE COST OF SOLE PLATES, KEEPER ANGLES, ANCHOR BOLTS, AND ASSOCIATED HARDWARE IS INCLUDED FOR PAYMENT WITH THE BEARING ITEMS.
14. WHERE ANCHOR BOLTS EXTEND INTO THE EXISTING PIER CAP USE A PACHOMETER TO LOCATE EXISTING PRIMARY STEEL REINFORCEMENT BARS AND ADJUST LAYOUT OF ANCHOR BOLTS TO AVOID INTERFERENCE AS MUCH AS PRACTICABLE, AS APPROVED BY THE DEPARTMENT REPRESENTATIVE.
15. CLEAN AND LUBRICATE ALL BEARINGS NOT NOTED FOR REPLACEMENT PER REPAIR B4.
16. KEEPER ANGLES MAY BE RELOCATED UP TO 2" ALONG GIRDER TO AVOID EXISTING REBAR, ANCHOR BOLTS, AND TO MEET COVER REQUIREMENTS. IF ADDITIONAL ADJUSTMENTS IS REQUIRED, CONTACT ENGINEER OF RECORD.

NO.	REVISION	DATE	BY

WEST VIRGINIA DEPARTMENT OF TRANSPORTATION
DIVISION OF HIGHWAYS
ENGINEERING DIVISION

I-64 OVER KANAWHA RIVER
EUGENE A. CARTER MEMORIAL BRIDGE +3

EXPANSION BEARING DETAILS
(1 OF 2)

DESIGNED	DATE
JPV	11/25
DRAWN	
AFMO	11/25
CHECKED	
REVIEWED	

HDR ENGINEERING INC.
CONSULTING ENGINEERS
CHARLESTON, WV
681-341-6100

SHEET OF
BRIDGE NO. 2563.6

AGRIES $DD-MMM-YYYY HH:MM$ pw://pwhdruseas02.Intranet.hdr:HDR_US_East_02/Documents/WV_DOT/WVDOT-Eugene_Carter_Bridge_3/6.0_CAD_BIM/6.2_WIP/HDR/6.2.2_Sheet_Files/23_Structure/3.511 Repairs B1 and B2 Expansion Bearing Details.dgn

PROJECT NUMBERS		DISTRICT	COUNTY	SHEET NO.	TOTAL
STATE	FEDERAL				
S320-64-57.44 00	NHPP-0064 (497)D	1	KANAWHA		

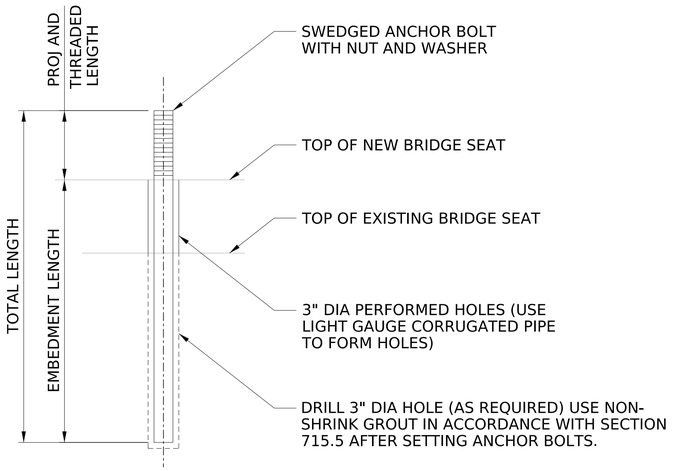

PARTIALLY DOWELED ANCHOR BOLT DETAIL

NOT TO SCALE

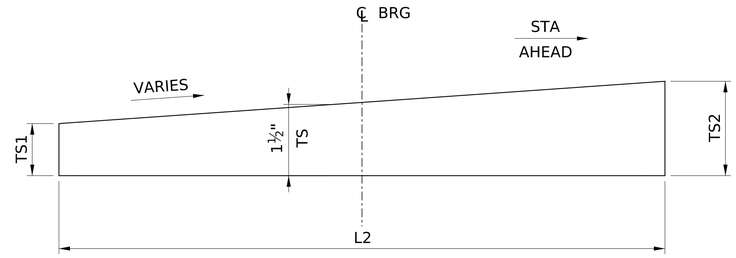

(NOT TO SCALE)

SOLE PLATE DETAIL

NOT TO SCALE

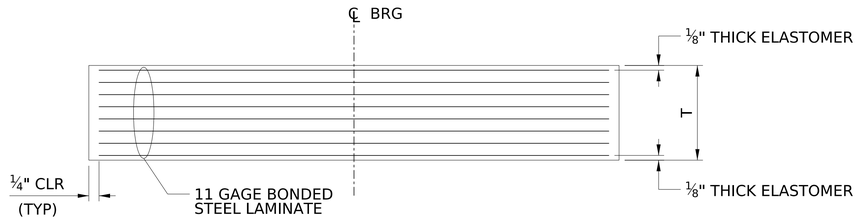

BEARING DETAIL

NOT TO SCALE

NO.	REVISION	DATE	BY

WEST VIRGINIA DEPARTMENT OF TRANSPORTATION
DIVISION OF HIGHWAYS
ENGINEERING DIVISION

I-64 OVER KANAWHA RIVER
EUGENE A. CARTER MEMORIAL BRIDGE +3
EXPANSION BEARING DETAILS
(2 OF 2)

DESIGNED	DATE
JPV	11/25
DRAWN	
AFMO	11/25
CHECKED	
REVIEWED	

HDR ENGINEERING INC.
CONSULTING ENGINEERS
CHARLESTON, WV
681-341-6100

SHEET OF
BRIDGE NO. 2563.6

AGRIES $DD-MMM-YYYY HH:MM$ pw://pwhdruseas02.intranet.hdr:HDR_US_East_02/Documents/WV_DOT/WVDOT-Eugene_Carter_Bridge_3/6.0_CAD_BIM/6.2_WIP/HDR/6.2.2_Sheet_Files/23_Structure/3.512 Repair B3 Fixed Bearing Details.dgn

PROJECT NUMBERS		DISTRICT	COUNTY	SHEET NO.	TOTAL
STATE	FEDERAL				
S320-64-57.44 00	NHPP-0064 (497)D	1	KANAWHA		

LOCATION	STRINGER/GIRDER	BEARING TYPE	BEARING DESIGN LOADS (KIP) - SERVICE LOADS					THERMAL MOVEMENT (INCHES)		DESIGN ROTATIONS (RADIANS)	SKEW CL BEARING TO CL BRG PAD (DEGREES)
			VERTICAL			HORIZONTAL		LONGITUDINAL			
			DC	LL+IM	TOTAL	TRANS PAD AXIS	LONG PAD AXIS	TEMP FALL (-98˚ F)	TEMP RISE (+52˚ F)		
ABUTMENT AW	G1	GUIDED	82.03	109.88	191.91	6.03	0.00	-0.98	0.52	0.0034	4.140˚
	G2, G3	GUIDED	120.53	156.73	277.26	6.03	0.00	-1.03	0.55	0.0035	4.140˚
	G4	GUIDED	92.00	136.92	228.92	6.03	0.00	-1.05	0.56	0.0038	4.140˚
PIER A3 (SPAN 2WB)	G1	GUIDED	121.67	114.73	236.40	8.17	0.00	-1.27	0.67	0.0071	4.420˚
	G2, G3	GUIDED	188.68	163.01	351.69	8.17	0.00	-1.33	0.71	0.0083	4.420˚
	G4	GUIDED	177.21	145.87	323.08	8.17	0.00	-1.36	0.72	0.0091	4.420˚
ABUTMENT AE	G1	GUIDED	110.71	121.05	231.75	7.28	0.00	-1.20	0.64	0.0067	4.970˚
	G2, G3	GUIDED	161.80	161.08	322.89	7.34	0.00	-1.25	0.66	0.0075	4.970˚
	G4	GUIDED	140.49	148.36	288.85	7.34	0.00	-1.28	0.68	0.0084	4.970˚
PIER A4	G1	GUIDED	98.86	101.85	200.72	7.92	0.00	-1.20	0.64	0.0065	4.970˚
	G2, G3	GUIDED	174.80	172.82	347.63	7.95	0.00	-1.25	0.66	0.0076	4.970˚
	G4	GUIDED	127.66	125.33	253.00	7.95	0.00	-1.28	0.68	0.0075	4.970˚
PIER A3 (SPAN 3WB)	G1	GUIDED	82.03	109.88	191.91	6.55	0.00	-0.98	0.52	0.0034	4.400˚
	G2, G3	GUIDED	120.53	156.73	277.26	6.55	0.00	-1.03	0.55	0.0035	4.400˚
	G4	GUIDED	92.00	136.92	228.92	6.55	0.00	-1.05	0.56	0.0038	4.400˚
PIER A7 (SPAN 4WB)	G1	GUIDED	121.67	114.73	236.40	8.98	0.00	-1.27	0.67	0.0071	5.490˚
	G2, G3	GUIDED	188.68	163.01	351.69	8.98	0.00	-1.33	0.71	0.0083	5.490˚
	G4	GUIDED	177.21	145.87	323.08	8.98	0.00	-1.36	0.72	0.0091	5.490˚
PIER A4 (SPAN 3EB)	G1	GUIDED	88.25	101.09	189.33	6.91	0.00	-1.01	0.53	0.0042	4.140˚
	G2, G3	GUIDED	153.22	169.16	322.38	6.91	0.00	-1.05	0.56	0.0050	4.140˚
	G4	GUIDED	107.82	122.79	230.61	6.91	0.00	-1.07	0.57	0.0053	4.140˚
PIER A8 (SPAN 4EB)	G1	GUIDED	95.29	108.63	203.93	7.08	0.00	-1.01	0.53	0.0043	4.140˚
	G2, G3	GUIDED	144.89	160.08	304.97	7.13	0.00	-1.05	0.56	0.0049	4.140˚
	G4	GUIDED	115.47	131.56	247.03	7.13	0.00	-1.07	0.57	0.0054	4.140˚
PIER C8 (SPAN CA)	CG1, CG4	GUIDED	89.73	68.10	157.83	6.11	0.00	-1.05	0.56	0.0068	5.440˚
	CG2-CG3	GUIDED	95.79	77.73	173.52	6.15	0.00	-1.11	0.59	0.0055	5.440˚
PIER A7 (SPAN 5WB)	G1-G1A, G4	GUIDED	143.45	137.40	280.85	7.31	0.00	-1.33	0.70	0.0101	5.490˚
	G2-G3	GUIDED	178.54	145.16	323.70	7.35	0.00	-1.31	0.70	0.0090	5.490˚
PIER B (SPAN 6WB)	XB1-XB2	GUIDED	353.40	280.93	634.33	16.20	0.00	-1.40	0.74	0.0087	0.000˚
PIER A8 (SPAN 5EB)	G1,G3A-G4	GUIDED	135.93	138.07	274.00	7.54	0.00	-1.40	0.74	0.0083	4.950˚
	G2-G3	GUIDED	168.93	144.49	313.42	7.58	0.00	-1.37	0.73	0.0075	4.950˚
PIER D3 (SPAN DA)	DG1.DG4	GUIDED	133.37	106.85	240.22	6.22	0.00	-1.20	0.64	0.0094	10.550˚
	DG2-DG3	GUIDED	84.31	86.65	170.96	6.41	0.00	-1.16	0.61	0.0071	14.550˚
PIER B (SPAN 6EB)	XB3, XB4	GUIDED	429.01	288.51	717.52	16.57	0.00	-1.43	0.76	0.0087	0.000˚

NO.	REVISION	DATE	BY

WEST VIRGINIA DEPARTMENT OF TRANSPORTATION
DIVISION OF HIGHWAYS
ENGINEERING DIVISION

I-64 OVER KANAWHA RIVER
EUGENE A. CARTER MEMORIAL BRIDGE +3

TABLE OF BEARING DESIGN LOADS (1 OF 2)

DESIGNED	DATE
JPV	11/25
DRAWN	
AFMO	11/25
CHECKED	
REVIEWED	

HDR ENGINEERING INC.
CONSULTING ENGINEERS
CHARLESTON, WV
681-341-6100

SHEET OF

BRIDGE NO. 2563.6

AGRIES $DD-MMM-YYYY HH:MM$ pw://pwhdruseas02.intranet.hdr:HDR_US_East_02/Documents/WV_DOT/WVDOT-Eugene_Carter_Bridge_3/6.0_CAD_BIM/6.2_WIP/HDR/6.2.2_Sheet_Files/23_Structure/3.605 Table of Bearing Design Loads (1 of 2).dgn

PROJECT NUMBERS		DISTRICT	COUNTY	SHEET NO.	TOTAL
STATE	FEDERAL				
S320-64-57.44 00	NHPP-0064 (497)D	1	KANAWHA		

LOCATION	STRINGER/GIRDER	BEARING TYPE	BEARING DESIGN LOADS (KIP) - SERVICE LOADS					THERMAL MOVEMENT (INCHES)		DESIGN ROTATIONS (RADIANS)	SKEW CL BEARING TO CL BRG PAD (DEGREES)
			VERTICAL			HORIZONTAL		LONGITUDINAL			
			DC	LL+IM	TOTAL	TRANS PAD AXIS	LONG PAD AXIS	TEMP FALL (-98˚ F)	TEMP RISE (+52˚ F)		
PIER C (SPAN 8WB)	XB1, XB2	GUIDED	279.96	237.01	516.98	11.23	0.00	-1.09	0.58	0.0065	0.000˚
PIER E (SPAN 9WB)	G1	GUIDED	58.41	63.06	121.46	3.75	0.00	-1.09	0.58	0.0066	4.210˚
	G2	GUIDED	108.02	141.01	249.03	3.76	0.00	-1.09	0.58	0.0067	4.210˚
	G6	GUIDED	96.74	99.57	196.31	3.76	0.00	-1.09	0.58	0.0066	4.210˚
	G3-G5	GUIDED	129.76	143.20	272.96	3.76	0.00	-1.09	0.58	0.0072	0.000˚
PIER C (SPAN 8EB)	XB3, XB4	GUIDED	279.96	237.01	516.98	11.28	0.00	-1.09	0.58	0.0065	0.000˚
PIER E (SPAN 9EB)	G1	GUIDED	108.02	141.01	249.03	3.78	0.00	-1.10	0.58	0.0068	0.000˚
	G2-G4	GUIDED	129.76	143.20	272.96	3.78	0.00	-1.09	0.58	0.0072	0.000˚
	G5	GUIDED	108.02	141.01	249.03	3.78	0.00	-1.10	0.58	0.0067	5.880˚
	G6	GUIDED	58.41	63.06	121.46	3.78	0.00	-1.10	0.58	0.0066	5.900˚
PIER E (SPAN DE)	EG1	GUIDED	0.00	0.00	0.00	3.62	0.00	-1.05	0.56	0.0000	7.339˚
PIER E (SPAN 10WB)	G1, G5	GUIDED	0.00	0.00	0.00	3.65	0.00	-1.06	0.56	0.0000	7.339˚
	G2-G4	GUIDED	0.00	0.00	0.00	3.65	0.00	-1.06	0.56	0.0000	0.000˚
PIER EB (SPAN EE)	EG1-EG2	GUIDED	0.00	0.00	0.00	8.96	0.00	-1.08	0.57	0.0000	0.000˚
PIER R1 (SPAN 11WB)	XB1-XB3	GUIDED	0.00	0.00	0.00	5.97	0.00	-1.06	0.56	0.0000	0.000˚
PIER E (SPAN 10EB)	G1	GUIDED	0.00	0.00	0.00	3.14	0.00	-1.06	0.56	0.0000	0.000˚
	G2-G4	GUIDED	0.00	0.00	0.00	3.14	0.00	-1.06	0.56	0.0000	0.000˚
	G5	GUIDED	0.00	0.00	0.00	6.23	0.00	-1.06	0.56	0.0000	0.000˚
PIER R1 (SPAN 11EB)	XB1-XB3	GUIDED	0.00	0.00	0.00	5.97	0.00	-1.06	0.56	0.0000	0.000˚
ABUTMENT D	DG1, DG4	GUIDED	110.43	10.21	120.64	3.22	0.00	-0.71	0.38	0.0007	0.000˚
	DG2-DG3	GUIDED	66.20	0.34	66.53	3.24	0.00	-0.70	0.37	0.0004	0.000˚
PIER D1 (SPAN D1)	DG1, DG4	GUIDED	101.46	8.57	110.03	3.22	0.00	-0.71	0.38	0.0017	6.150˚
	DG2-DG3	GUIDED	68.05	0.58	68.63	3.24	0.00	-0.70	0.37	0.0014	6.150˚
PIER D1 (SPAN D2)	DG1, DG4	GUIDED	100.85	19.67	120.52	5.01	0.00	-1.05	0.56	0.0006	9.570˚
	DG2-DG3	GUIDED	67.04	3.78	70.82	5.04	0.00	-1.03	0.55	0.0004	9.570˚
PIER D3 (SPAN D3)	DG1, DG4	GUIDED	90.73	17.63	108.36	5.21	0.00	-1.05	0.56	0.0026	9.570˚
	DG2-DG3	GUIDED	61.52	3.17	64.69	5.42	0.00	-1.03	0.55	0.0021	9.570˚
PIER E (SPAN DF)	FG1-FG2	GUIDED	101.48	18.88	120.36	11.41	0.00	-1.09	0.58	0.0009	10.034˚
PIER FB (SPAN EF)	FG1-FG2	GUIDED	102.46	18.73	121.19	9.44	0.00	-1.09	0.58	0.0023	0.000˚

NO.	REVISION	DATE	BY

WEST VIRGINIA DEPARTMENT OF TRANSPORTATION
DIVISION OF HIGHWAYS
ENGINEERING DIVISION

I-64 OVER KANAWHA RIVER
EUGENE A. CARTER MEMORIAL BRIDGE +3

TABLE OF BEARING DESIGN LOADS (2 OF 2)

DESIGNED	JPV	DATE	11/25
DRAWN	AFMO		11/25
CHECKED			
REVIEWED			

HDR ENGINEERING INC.
CONSULTING ENGINEERS
CHARLESTON, WV
681-341-6100

SHEET OF

BRIDGE NO. 2563.6

AGRIES $DD-MMM-YYYY HH:MM$ pw://pwhdruseas02.intranet.hdr:HDR_US_East_02/Documents/WV_DOT/WVDOT-Eugene_Carter_Bridge_3/6.0_CAD_BIM/6.2_WIP/HDR/6.2.2_Sheet_Files/23_Structure/3.606 Table of Bearing Design Loads (2 of 2).dgn

PROJECT NUMBERS		DISTRICT	COUNTY	SHEET NO.	TOTAL
STATE	FEDERAL				
S320-64-57.44 00	NHPP-0064 (497)D	1	KANAWHA		

LOCATION	STRINGER/GIRDER	BEARING TYPE	BEARING							SOLE PLATE						
			SIZE		NO. OF INTERIOR LAYERS	INTERIOR LAYER THICKNESS	NO. OF STEEL LAMINATES	TOTAL THICKNESS (T) (INCHES)	NO. REQUIRED	SIZE		TS1 (INCHES)	THICKNESS AT CL BRG, TS (INCHES)	TS2 (INCHES)	WELD, WD1	LONGITUDINAL SLOPE BOTTOM OF GIRDER FLANGE (%)
			L1 (INCHES)	W1 (INCHES)						L2 (INCHES)	W2 (INCHES)					
ABUTMENT AW	G1	GUIDED	14.00	18.00	6	0.375	7	3.3372	1	16.00	20.00	1 7/16	1 1/2	1 9/16	5/16	0.700%
	G2, G3	GUIDED	14.00	18.00	6	0.375	7	3.3372	2	16.00	20.00	1 7/16	1 1/2	1 9/16	5/16	0.700%
	G4	GUIDED	14.00	18.00	6	0.375	7	3.3372	1	16.00	20.00	1 7/16	1 1/2	1 9/16	5/16	0.700%
PIER A3 (SPAN 2WB)	G1	GUIDED	14.00	18.00	8	0.375	9	4.3264	1	16.00	20.00	1 7/16	1 1/2	1 9/16	5/16	0.800%
	G2, G3	GUIDED	14.00	18.00	8	0.375	9	4.3264	2	16.00	20.00	1 7/16	1 1/2	1 9/16	5/16	0.800%
	G4	GUIDED	14.00	18.00	8	0.375	9	4.3264	1	16.00	20.00	1 7/16	1 1/2	1 9/16	5/16	0.800%
ABUTMENT AE	G1	GUIDED	14.00	18.00	8	0.375	9	4.3264	1	16.00	20.00	1 1/2	1 1/2	1 1/2	5/16	0.200%
	G2, G3	GUIDED	14.00	18.00	8	0.375	9	4.3264	2	16.00	20.00	1 1/2	1 1/2	1 1/2	5/16	0.200%
	G4	GUIDED	14.00	18.00	8	0.375	9	4.3264	1	16.00	20.00	1 1/2	1 1/2	1 1/2	5/16	0.200%
PIER A4	G1	GUIDED	14.00	18.00	6	0.375	7	3.3372	1	16.00	20.00	1 3/8	1 1/2	1 5/8	5/16	1.500%
	G2, G3	GUIDED	14.00	18.00	6	0.375	7	3.3372	2	16.00	20.00	1 3/8	1 1/2	1 5/8	5/16	1.500%
	G4	GUIDED	14.00	18.00	8	0.375	9	4.3264	1	16.00	20.00	1 3/8	1 1/2	1 5/8	5/16	1.500%
PIER A3 (SPAN 3WB)	G1	GUIDED	14.00	18.00	6	0.375	7	3.3372	1	16.00	20.00	1 9/16	1 1/2	1 7/16	5/16	-0.500%
	G2, G3	GUIDED	14.00	18.00	6	0.375	7	3.3372	2	16.00	20.00	1 9/16	1 1/2	1 7/16	5/16	-0.500%
	G4	GUIDED	14.00	18.00	6	0.375	7	3.3372	1	16.00	20.00	1 9/16	1 1/2	1 7/16	5/16	-0.500%
PIER A7 (SPAN 4WB)	G1	GUIDED	14.00	18.00	8	0.375	9	4.3264	1	16.00	20.00	1 5/16	1 1/2	1 11/16	5/16	2.200%
	G2, G3	GUIDED	14.00	18.00	8	0.375	9	4.3264	2	16.00	20.00	1 5/16	1 1/2	1 11/16	5/16	2.200%
	G4	GUIDED	14.00	18.00	8	0.375	9	4.3264	1	16.00	20.00	1 5/16	1 1/2	1 11/16	5/16	2.200%
PIER A4 (SPAN 3EB)	G1	GUIDED	14.00	18.00	6	0.375	7	3.3372	1	16.00	20.00	1 9/16	1 1/2	1 7/16	5/16	-0.900%
	G2, G3	GUIDED	14.00	20.00	6	0.375	7	3.3372	2	16.00	22.00	1 9/16	1 1/2	1 7/16	5/16	-0.900%
	G4	GUIDED	14.00	20.00	6	0.375	7	3.3372	1	16.00	22.00	1 9/16	1 1/2	1 7/16	5/16	-0.900%
PIER A8 (SPAN 4EB)	G1	GUIDED	14.00	18.00	6	0.375	7	3.3372	1	16.00	20.00	1 5/16	1 1/2	1 11/16	5/16	2.500%
	G2, G3	GUIDED	14.00	20.00	6	0.375	7	3.3372	2	16.00	22.00	1 5/16	1 1/2	1 11/16	5/16	2.500%
	G4	GUIDED	14.00	20.00	6	0.375	7	3.3372	1	16.00	22.00	1 5/16	1 1/2	1 11/16	5/16	2.500%
PIER C8 (SPAN CA)	CG1, CG4	GUIDED	14.00	18.00	6	0.375	7	3.3372	2	16.00	20.00	1 15/16	1 1/2	1 1/16	5/16	-5.100%
	CG2-CG3	GUIDED	14.00	18.00	6	0.375	7	3.3372	2	16.00	20.00	1 15/16	1 1/2	1 1/16	5/16	-5.100%
PIER A7 (SPAN 5WB)	G1-G1A, G4	GUIDED	20.00	20.00	8	0.375	9	4.3264	3	22.00	22.00	1 15/16	1 1/2	1 1/16	5/16	-3.700%
	G2-G3	GUIDED	20.00	20.00	8	0.375	9	4.3264	2	22.00	22.00	1 15/16	1 1/2	1 1/16	5/16	-3.700%
PIER B (SPAN 6WB)	XB1-XB2	GUIDED	24.00	30.00	8	0.375	9	4.3264	2	26.00	32.00	1 1/2	1 1/2	1 1/2	5/16	0.000%
PIER A8 (SPAN 5EB)	G1,G3A-G4	GUIDED	20.00	20.00	8	0.375	9	4.3264	3	22.00	22.00	1 15/16	1 1/2	1 1/16	5/16	-4.100%
	G2-G3	NON-GUIDED	20.00	20.00	8	0.375	9	4.3264	2	22.00	22.00	1 15/16	1 1/2	1 1/16	5/16	-4.100%
PIER D3 (SPAN DA)	DG1, DG4	GUIDED	20.00	18.00	6	0.375	7	3.3372	2	22.00	20.00	1 5/8	1 1/2	1 3/8	5/16	-1.000%
	DG2-DG3	NON-GUIDED	20.00	18.00	8	0.375	9	4.3264	2	22.00	20.00	1 5/8	1 1/2	1 3/8	5/16	-1.000%
PIER B (SPAN 6EB)	XB3, XB4	GUIDED	24.00	30.00	8	0.375	9	4.3264	2	26.00	32.00	1 1/2	1 1/2	1 1/2	5/16	0.000%
PIER C (SPAN 8WB)	XB1, XB2	GUIDED	20.00	24.00	6	0.375	7	3.3372	2	22.00	26.00	1 1/2	1 1/2	1 1/2	5/16	0.000%
PIER E (SPAN 9WB)	G1	GUIDED	20.00	16.00	8	0.375	9	4.3264	1	22.00	18.00	3/4	1 1/2	2 1/4	5/16	6.700%
	G2	GUIDED	20.00	18.00	6	0.375	7	3.3372	1	22.00	20.00	3/4	1 1/2	2 1/4	5/16	6.700%
	G6	GUIDED	20.00	18.00	6	0.375	7	3.3372	1	22.00	20.00	7/8	1 1/2	2 1/8	5/16	5.900%
	G3-G5	NON-GUIDED	20.00	18.00	6	0.375	7	3.3372	3	22.00	20.00	7/8	1 1/2	2 1/8	5/16	5.900%
PIER C (SPAN 8EB)	XB3, XB4	GUIDED	20.00	24.00	6	0.375	7	3.3372	2	22.00	26.00	1 1/2	1 1/2	1 1/2	5/16	0.000%
PIER E (SPAN 9EB)	G1	GUIDED	14.00	18.00	6	0.375	7	3.3372	1	16.00	20.00	1	1 1/2	2	5/16	5.900%
	G2-G4	GUIDED	14.00	18.00	6	0.375	7	3.3372	2	16.00	20.00	1	1 1/2	2	5/16	5.900%
	G5	GUIDED	14.00	18.00	6	0.375	7	3.3372	1	16.00	20.00	15/16	1 1/2	2 1/16	5/16	6.900%
	G6	NON-GUIDED	14.00	16.00	6	0.375	7	3.3372	1	16.00	18.00	15/16	1 1/2	2 1/16	5/16	6.900%
PIER E (SPAN DE)	EG1	NON-GUIDED	14.00	18.00	8	0.375	9	4.3264	1	16.00	20.00	1 15/16	1 1/2	1 1/16	5/16	-5.300%
PIER E (SPAN 10WB)	G1, G5	GUIDED	14.00	18.00	8	0.375	9	4.3264	2	16.00	20.00	1 15/16	1 1/2	1 1/16	5/16	-5.700%
	G2-G4	NON-GUIDED	14.00	18.00	8	0.375	9	4.3264	3	16.00	20.00	1 15/16	1 1/2	1 1/16	5/16	-5.700%
PIER EB (SPAN EE)	EG1-EG2	GUIDED	14.00	18.00	8	0.375	9	4.3264	2	16.00	20.00	3/8	1 1/2	2 5/8	5/16	14.300%
PIER R1 (SPAN 11WB)	XB1-XB3	GUIDED	14.00	16.00	8	0.375	9	4.3264	3	16.00	18.00	1 1/2	1 1/2	1 1/2	5/16	0.000%
PIER E (SPAN 10EB)	G1	GUIDED	14.00	18.00	8	0.375	9	4.3264	1	16.00	20.00	1 15/16	1 1/2	1 1/16	5/16	-5.800%
	G2-G4	GUIDED	14.00	18.00	8	0.375	9	4.3264	3	16.00	20.00	1 15/16	1 1/2	1 1/16	5/16	-5.800%
	G5	NON-GUIDED	14.00	16.00	8	0.375	9	4.3264	1	16.00	18.00	1 15/16	1 1/2	1 1/16	5/16	-5.800%
PIER R1 (SPAN 11EB)	XB1-XB3	GUIDED	14.00	16.00	8	0.375	9	4.3264	3	16.00	18.00	1 1/2	1 1/2	1 1/2	5/16	0.000%
ABUTMENT D	DG1, DG4	GUIDED	14.00	15.00	4	0.375	5	2.3480	2	16.00	17.00	15/16	1 1/2	2 1/16	5/16	7.200%
	DG2-DG3	GUIDED	14.00	15.00	4	0.375	5	2.3480	2	16.00	17.00	15/16	1 1/2	2 1/16	5/16	7.200%
PIER D1 (SPAN D1)	DG1, DG4	GUIDED	14.00	15.00	6	0.375	7	3.3372	2	16.00	17.00	2 1/16	1 1/2	15/16	5/16	-7.100%
	DG2-DG3	NON-GUIDED	14.00	15.00	6	0.375	7	3.3372	2	16.00	17.00	2 1/16	1 1/2	15/16	5/16	-7.100%
PIER D1 (SPAN D2)	DG1, DG4	GUIDED	14.00	15.00	6	0.375	7	3.3372	2	16.00	17.00	1 1/8	1 1/2	1 7/8	5/16	4.800%
	DG2-DG3	NON-GUIDED	14.00	15.00	6	0.375	7	3.3372	2	16.00	17.00	1 1/8	1 1/2	1 7/8	5/16	4.800%
PIER D3 (SPAN D3)	DG1, DG4	GUIDED	14.00	18.00	6	0.375	7	3.3372	2	16.00	20.00	1 5/8	1 1/2	1 3/8	5/16	-1.400%
	DG2-DG3	NON-GUIDED	14.00	18.00	6	0.375	7	3.3372	2	16.00	20.00	1 5/8	1 1/2	1 3/8	5/16	-1.400%
PIER E (SPAN DF)	FG1-FG2	GUIDED	14.00	20.00	6	0.375	7	3.3372	2	16.00	22.00	2 1/8	1 1/2	7/8	5/16	-7.500%
PIER FB (SPAN EF)	FG1-FG2	GUIDED	14.00	12.00	6	0.375	7	3.3372	2	16.00	14.00	11/16	1 1/2	2 5/16	5/16	10.200%

NO.	REVISION	DATE	BY

WEST VIRGINIA DEPARTMENT OF TRANSPORTATION
DIVISION OF HIGHWAYS
ENGINEERING DIVISION

I-64 OVER KANAWHA RIVER
EUGENE A. CARTER MEMORIAL BRIDGE +3

BEARING DESIGN TABLE (1 OF 2)

DESIGNED	DATE
JPV	11/25
DRAWN	
AFMO	11/25
CHECKED	
REVIEWED	

HDR ENGINEERING INC.
CONSULTING ENGINEERS
CHARLESTON, WV
681-341-6100

SHEET OF
BRIDGE NO. 2563.6

AGRIES $DD-MMM-YYYY HH:MM$ pw://pwhdruseas02.intranet.hdr:HDR_US_East_02/Documents/WV_DOT/WVDOT-Eugene_Carter_Bridge_3/6.0_CAD_BIM/6.2_WIP/HDR/6.2.2_Sheet_Files/23_Structure/3.600 Bearing Design Table (1 of 2).dgn

PROJECT NUMBERS		DISTRICT	COUNTY	SHEET NO.	TOTAL
STATE	FEDERAL				
S320-64-57.44 00	NHPP-0064 (497)D	1	KANAWHA		

LOCATION	ANCHOR BOLTS								KEEPER ANGLES			
									ANGLE		STIFF. PLATES	
	NO.	S1 (INCHES)	S2 (INCHES)	DIA (INCHES)	THREAD (INCHES)	PROJ (INCHES)	EMBED, D (INCHES)	LENGTH (INCHES)	SIZE	LENGTH (INCHES)	THICKNESS (INCHES)	SPACING (INCHES)
ABUTMENT AW	4	6.00	25.50	1 3/4	4 1/4	5 1/4	15.00	20 1/4	L6X4X7/8	12.00	3/4	5 1/8
	8	6.00	25.50	1 3/4	0	1	15.00	16	L6X4X7/8	12.00	3/4	5 1/8
	4	6.00	25.50	1 3/4	0	1	15.00	16	L6X4X7/8	12.00	3/4	5 1/8
PIER A3 (SPAN 2WB)	4	6.00	27.50	1 3/4	0	1 1/8	15.00	16 1/8	L6X4X7/8	12.00	3/4	5 1/8
	8	6.00	27.50	1 3/4	0	7/8	15.00	15 7/8	L6X4X7/8	12.00	3/4	5 1/8
	4	6.00	25.50	1 3/4	0	1 1/8	15.00	16 1/8	L6X4X7/8	12.00	3/4	5 1/8
ABUTMENT AE	4	6.00	25.50	1 3/4	0	1 1/8	15.00	16 1/8	L6X4X7/8	12.00	3/4	5 1/8
	8	6.00	27.50	1 3/4	0	7/8	15.00	15 7/8	L6X4X7/8	12.00	3/4	5 1/8
	4	6.00	27.50	1 3/4	0	1 1/8	15.00	16 1/8	L6X4X7/8	12.00	3/4	5 1/8
PIER A4	4	6.00	25.50	1 3/4	0	1 1/8	15.00	16 1/8	L6X4X7/8	12.00	3/4	5 1/8
	8	6.00	27.50	1 3/4	0	7/8	15.00	15 7/8	L6X4X7/8	12.00	3/4	5 1/8
	4	6.00	25.50	1 3/4	0	1	15.00	16	L6X4X7/8	12.00	3/4	5 1/8
PIER A3 (SPAN 3WB)	4	6.00	25.50	1 3/4	0	1	15.00	16	L6X4X7/8	12.00	3/4	5 1/8
	8	6.00	25.50	1 3/4	0	1	15.00	16	L6X4X7/8	12.00	3/4	5 1/8
	4	6.00	27.50	1 3/4	0	7/8	15.00	15 7/8	L6X4X7/8	12.00	3/4	5 1/8
PIER A7 (SPAN 4WB)	4	6.00	27.50	1 3/4	0	7/8	15.00	15 7/8	L6X4X7/8	12.00	3/4	5 1/8
	8	6.00	25.50	1 3/4	0	1	15.00	16	L6X4X7/8	12.00	3/4	5 1/8
	4	6.00	25.50	1 3/4	0	1	15.00	16	L6X4X7/8	12.00	3/4	5 1/8
PIER A4 (SPAN 3EB)	4	6.00	27.50	1 3/4	0	7/8	15.00	15 7/8	L6X4X7/8	12.00	3/4	5 1/8
	8	6.00	29.50	1 3/4	0	7/8	15.00	15 7/8	L6X4X7/8	12.00	3/4	5 1/8
	4	6.00	29.50	1 3/4	0	7/8	15.00	15 7/8	L6X4X7/8	12.00	3/4	5 1/8
PIER A8 (SPAN 4EB)	4	6.00	27.50	1 3/4	0	1 1/8	15.00	16 1/8	L6X4X7/8	12.00	3/4	5 1/8
	8	6.00	29.50	1 3/4	0	1 1/8	15.00	16 1/8	L6X4X7/8	12.00	3/4	5 1/8
	4	6.00	29.50	1 3/4	0	1 1/8	15.00	16 1/8	L6X4X7/8	12.00	3/4	5 1/8
PIER C8 (SPAN CA)	8	6.00	29.50	1 3/4	0	1 1/8	15.00	16 1/8	L6X4X7/8	12.00	3/4	5 1/8
	8	6.00	27.50	1 3/4	0	7/8	15.00	15 7/8	L6X4X7/8	12.00	3/4	5 1/8
PIER A7 (SPAN 5WB)	12	6.00	29.50	1 3/4	0	7/8	15.00	15 7/8	L6X4X7/8	12.00	3/4	5 1/8
	8	6.00	29.50	1 3/4	0	7/8	15.00	15 7/8	L6X4X7/8	12.00	3/4	5 1/8
PIER B (SPAN 6WB)	8	6.00	39.50	1 3/4	0	7/8	15.00	15 7/8	L6X4X7/8	12.00	3/4	5 1/8
PIER A8 (SPAN 5EB)	12	6.00	29.50	1 3/4	0	7/8	15.00	15 7/8	L6X4X7/8	12.00	3/4	5 1/8
	8	6.00	29.50	1 3/4	0	7/8	15.00	15 7/8	L6X4X7/8	12.00	3/4	5 1/8
PIER D3 (SPAN DA)	8	6.00	27.50	1 3/4	0	7/8	15.00	15 7/8	L6X4X7/8	12.00	3/4	5 1/8
	8	6.00	27.50	1 3/4	0	7/8	15.00	15 7/8	L6X4X7/8	12.00	3/4	5 1/8
PIER B (SPAN 6EB)	8	6.00	39.50	1 3/4	0	1 1/8	15.00	16 1/8	L6X4X7/8	12.00	3/4	5 1/8
PIER C (SPAN 8WB)	8	6.00	31.50	1 3/4	0	1	15.00	16	L6X4X7/8	12.00	3/4	5 1/8
PIER E (SPAN 9WB)	4	6.00	25.50	1 3/4	0	1 1/8	15.00	16 1/8	L6X4X7/8	12.00	3/4	5 1/8
	4	8.00	27.50	1 3/4	0	7/8	15.00	15 7/8	L6X4X7/8	12.00	3/4	5 1/8
	4	6.00	25.50	1 3/4	0	1 1/8	15.00	16 1/8	L6X4X7/8	12.00	3/4	5 1/8
	12	6.00	25.50	1 3/4	0	1 1/8	15.00	16 1/8	L6X4X7/8	12.00	3/4	5 1/8
PIER C (SPAN 8EB)	8	6.00	33.50	1 3/4	0	7/8	15.00	15 7/8	L6X4X7/8	12.00	3/4	5 1/8
PIER E (SPAN 9EB)	4	8.00	25.50	1 3/4	0	1	15.00	16	L6X4X7/8	12.00	3/4	5 1/8
	8	6.00	25.50	1 3/4	0	1	15.00	16	L6X4X7/8	12.00	3/4	5 1/8
	4	6.00	26.50	1 3/4	0	1	15.00	16	L6X4X7/8	12.00	3/4	5 1/8
	4	6.00	27.50	1 3/4	0	1 1/8	15.00	16 1/8	L6X4X7/8	12.00	3/4	5 1/8
PIER E (SPAN DE)	4	6.00	27.50	1 3/4	0	1 1/8	15.00	16 1/8	L6X4X7/8	12.00	3/4	5 1/8
PIER E (SPAN 10WB)	8	6.00	27.50	1 3/4	0	1 1/8	15.00	16 1/8	L6X4X7/8	12.00	3/4	5 1/8
	12	6.00	27.50	1 3/4	0	1 1/8	15.00	16 1/8	L6X4X7/8	12.00	3/4	5 1/8
PIER EB (SPAN EE)	8	6.00	27.50	1 3/4	0	1 1/8	15.00	16 1/8	L6X4X7/8	12.00	3/4	5 1/8
PIER R1 (SPAN 11WB)	12	6.00	25.50	1 3/4	0	1 1/8	15.00	16 1/8	L6X4X7/8	12.00	3/4	5 1/8
PIER E (SPAN 10EB)	4	6.00	27.50	1 3/4	0	1 1/8	15.00	16 1/8	L6X4X7/8	12.00	3/4	5 1/8
	12	6.00	27.50	1 3/4	0	1 1/8	15.00	16 1/8	L6X4X7/8	12.00	3/4	5 1/8
	4	6.00	25.50	1 3/4	0	1 1/8	15.00	16 1/8	L6X4X7/8	12.00	3/4	5 1/8
PIER R1 (SPAN 11EB)	12	6.00	25.50	1 3/4	0	1/8	15.00	15 1/8	L6X4X7/8	12.00	3/4	5 1/8
ABUTMENT D	8	6.00	25.50	1 3/4	0	1/8	12.00	12 1/8	L6X4X7/8	12.00	3/4	5 1/8
	8	6.00	25.50	1 3/4	0	1/8	12.00	12 1/8	L6X4X7/8	12.00	3/4	5 1/8
PIER D1 (SPAN D1)	8	6.00	25.50	1 3/4	0	1/8	12.00	12 1/8	L6X4X7/8	12.00	3/4	5 1/8
	8	6.00	25.50	1 3/4	0	1/8	12.00	12 1/8	L6X4X7/8	12.00	3/4	5 1/8
PIER D1 (SPAN D2)	8	6.00	25.50	1 3/4	0	1/8	15.00	15 1/8	L6X4X7/8	12.00	3/4	5 1/8
	8	6.00	25.50	1 3/4	0	1/8	15.00	15 1/8	L6X4X7/8	12.00	3/4	5 1/8
PIER D3 (SPAN D3)	8	6.00	25.50	1 3/4	0	1/8	15.00	15 1/8	L6X4X7/8	12.00	3/4	5 1/8
	8	6.00	25.50	1 3/4	0	1/8	15.00	15 1/8	L6X4X7/8	12.00	3/4	5 1/8
PIER E (SPAN DF)	8	6.00	25.50	1 3/4	0	1/8	15.00	15 1/8	L6X4X7/8	12.00	3/4	5 1/8
PIER FB (SPAN EF)	8	6.00	25.50	1 3/4	0	1/8	15.00	15 1/8	L6X4X7/8	12.00	3/4	5 1/8

NO.	REVISION	DATE	BY

WEST VIRGINIA DEPARTMENT OF TRANSPORTATION
DIVISION OF HIGHWAYS
ENGINEERING DIVISION

I-64 OVER KANAWHA RIVER
EUGENE A. CARTER MEMORIAL BRIDGE +3

BEARING DESIGN TABLE (2 OF 2)

DESIGNED	DATE
JPV	11/25
DRAWN	
AFMO	11/25
CHECKED	
REVIEWED	

HDR ENGINEERING INC.
CONSULTING ENGINEERS
CHARLESTON, WV
681-341-6100

SHEET OF

BRIDGE NO. 2563.6

AGRIES $DD-MMM-YYYY HH:MM$ pw://pwhdruseas02.intranet.hdr:HDR_US_East_02/Documents/WV_DOT/WVDOT-Eugene_Carter_Bridge_3/6.0_CAD_BIM/6.2_WIP/HDR/6.2.2_Sheet_Files/23_Structure/3.601 Bearing Design Table (2 of 2).dgn

PROJECT NUMBERS		DISTRICT	COUNTY	SHEET NO.	TOTAL
STATE	FEDERAL				
S320-64-57.44 00	NHPP-0064 (497)D	1	KANAWHA		

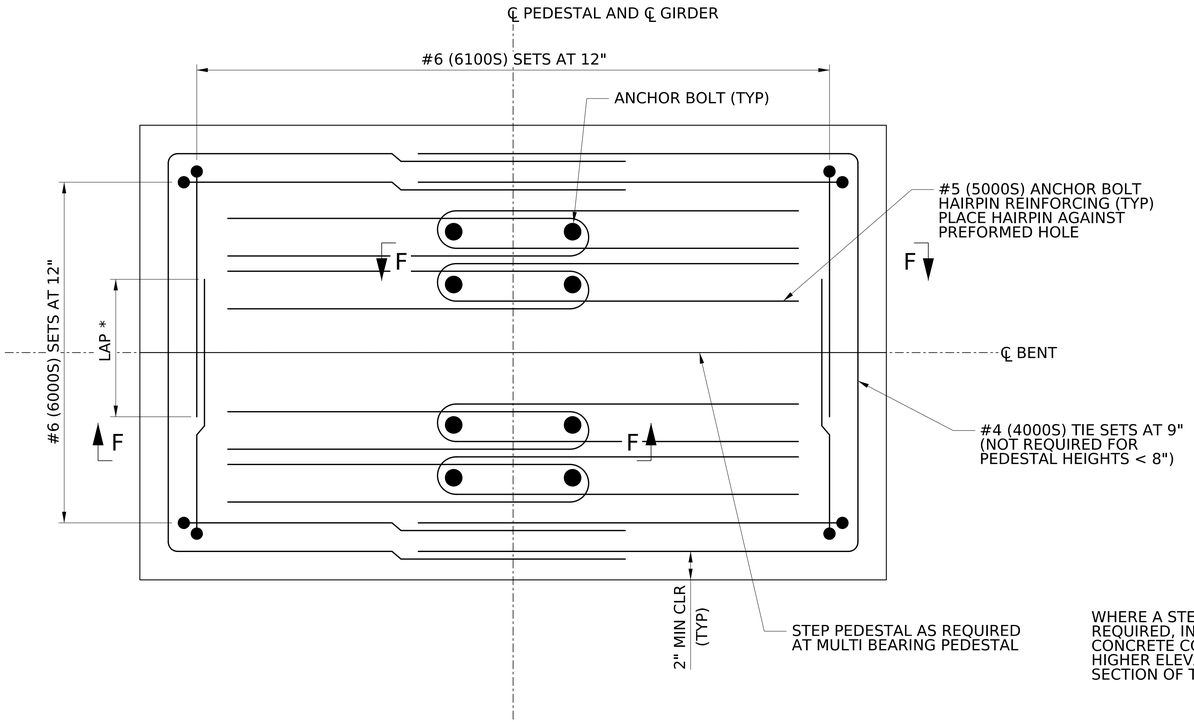

PLAN

NOT TO SCALE

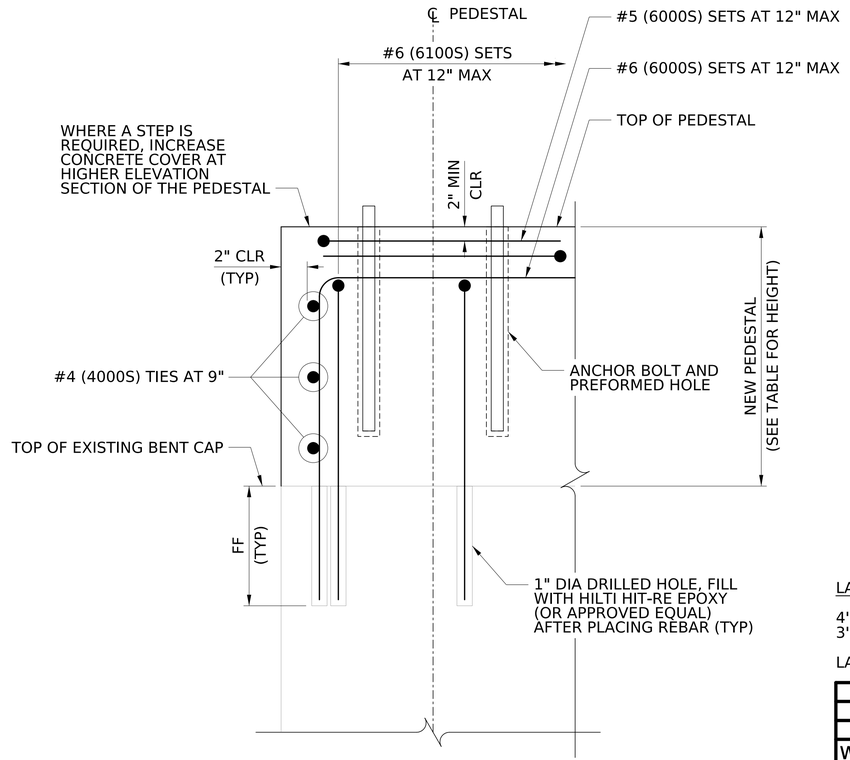

SECTION F-F

NOT TO SCALE

LAP LENGHTS:

4'-3" FOR PEDESTALS GREATER THAN 15" IN HEIGHT
3'-3" FOR ALL OTHER PEDESTALS

LAPS DO NOT APPLY TO HAIRPIN BARS

NO.	REVISION	DATE	BY

WEST VIRGINIA DEPARTMENT OF TRANSPORTATION
DIVISION OF HIGHWAYS
ENGINEERING DIVISION

I-64 OVER KANAWHA RIVER
EUGENE A. CARTER MEMORIAL BRIDGE +3

BEARING PEDESTAL DETAILS

DESIGNED	JPV	DATE	11/25
DRAWN	AFMO		11/25
CHECKED			
REVIEWED			

HDR ENGINEERING INC.
CONSULTING ENGINEERS
CHARLESTON, WV
681-341-6100

SHEET OF

BRIDGE NO. 2563.6

AGRIES $DD-MMM-YYYY HH:MM$ pw://pwhdruseas02.intranet.hdr:HDR_US_East_02/Documents/WV_DOT/WVDOT-Eugene_Carter_Bridge_3/6.0_CAD_BIM/6.2_WIP/HDR/6.2.2_Sheet_Files/23_Structure/3.610 Bearing Pedestal Details.dgn

PROJECT NUMBERS		DISTRICT	COUNTY	SHEET NO.	TOTAL
STATE	FEDERAL				
S320-64-57.44 00	NHPP-0064 (497)D	1	KANAWHA		

BEARING PEDESTAL REPAIR TABLE

LOCATION	PEDESTAL ID	PEDESTAL TYPE	BACK STATION BEAM	AHEAD STATION BEAM	BACK STATION TOP OF PEDESTAL ELEVATION (B)	AHEAD STATION TOP OF PEDESTAL ELEVATION (A)	HEIGHT (B) (IN)	HEIGHT (A) (IN)	AA (IN)	BB (IN)	CC (IN)
ABT AW	ABTAW-G1	A	-	G1	-	655.93	-	40 3/16	12	12	60
	ABTAW-G2	A	-	G2	-	655.50	-	38 15/16	12	12	60
	ABTAW-G3	A	-	G3	-	658.49	-	38 15/16	12	12	60
	ABTAW-G4	A	-	G4	-	659.86	-	39 5/16	12	12	60
ABT AE	ABTAE-G1	A	-	G1	-	660.90	-	39 9/16	12	12	56 ½
	ABTAE-G2	A	-	G2	-	662.15	-	38 7/16	12	12	56 ½
	ABTAE-G3	A	-	G3	-	663.48	-	38 7/16	12	12	56 ½
	ABTAE-G4	A	-	G4	-	664.86	-	38 15/16	12	12	56 ½
A3	A3-G1	B	-	G1	-	655.74	-	10 3/16	27	27	58
	A3-G2	B	-	G2	-	656.98	-	10 3/16	27	27	58
	A3-G3	B	-	G3	-	658.32	-	10 3/16	27	27	58
	A3-G4	B	-	G4	-	659.67	-	10 3/16	27	27	58
A4	A4-G1	B	G1	G1	660.11	660.05	10 3/16	10 3/16	27	27	58
	A4-G2	B	G2	G2	661.35	661.29	10 3/16	10 3/16	27	27	58
	A4-G3	B	G3	G3	662.69	662.63	10 3/16	10 3/16	27	27	58
	A4-G3	B	G4	G4	663.98	664.01	9 3/16	10 3/16	27	27	58
C8	C8-CG1	B	-	CG1	-	650.85	-	9 11/16	27	27	57
	C8-CG2	B	-	CG2	-	651.25	-	9 11/16	27	27	57
	C8-CG3	B	-	CG3	-	651.54	-	9 11/16	27	27	57
	C8-CG4	B	-	CG4	-	651.97	-	9 11/16	27	27	57
A7	A7-G1	B	G1	G1	652.44	652.44	9 3/16	9 3/16	33	33	60
	A7-G2	B	G2	G2	653.70	654.07	9 3/16	9 3/16	33	33	60
	A7-G3	B	G3	G3	655.04	655.22	9 3/16	9 3/16	33	33	60
	A7-G4	B	G4	G4	656.36	656.43	9 3/16	9 3/16	33	33	60
A8	A8-G1	B	G1	G1	657.07	656.98	10 3/16	9 3/16	33	33	60
	A8-G2	B	G2	G2	658.30	658.03	10 3/16	9 3/16	33	33	60
	A8-G3	B	G3	G3	659.64	659.18	10 3/16	9 3/16	33	33	60
	A8-G4	B	G4	G4	661.02	660.93	10 3/16	9 3/16	33	33	60
D3	D3-DG1	B	DG1	DG1	658.00	657.92	9 11/16	10 3/16	27	27	57
	D3-DG2	B	DG2	DG2	657.63	657.58	9 11/16	9 3/16	27	27	57
	D3-DG3	B	DG3	DG3	657.23	657.18	9 11/16	9 3/16	27	27	57
	D3-DG4	B	DG4	DG4	656.88	656.82	9 11/16	10 3/16	27	27	57
B-WB	B-XB1	C	XB1	-	643.19	-	21 3/8	-	14	14	42
	B-XB2	C	XB2	-	642.19	-	21 3/8	-	14	14	42
B-EB	B-XB3	C	XB3	-	642.19	-	21 3/8	-	14	14	42
	B-XB4	C	XB4	-	643.19	-	21 3/8	-	14	14	42

NO.	REVISION	DATE	BY

WEST VIRGINIA DEPARTMENT OF TRANSPORTATION
DIVISION OF HIGHWAYS
ENGINEERING DIVISION

I-64 OVER KANAWHA RIVER
EUGENE A. CARTER MEMORIAL BRIDGE +3

PEDESTAL DESIGN TABLE (1 OF 2)

DESIGNED	DATE
JPV	11/25
DRAWN	
AFMO	11/25
CHECKED	
REVIEWED	

HDR ENGINEERING INC.
CONSULTING ENGINEERS
CHARLESTON, WV
681-341-6100

SHEET OF
BRIDGE NO. 2563.6

AGRIES $DD-MMM-YYYY HH:MM$ pw://pwhdruseas02.Intranet.hdr:HDR_US_East_02/Documents/WV_DOT/WVDOT-Eugene_Carter_Bridge_3/6.0_CAD_BIM/6.2_WIP/HDR/6.2.2_Sheet_Files/23_Structure/3.615 Pedestal Design Table (1 of 2)

PROJECT NUMBERS		DISTRICT	COUNTY	SHEET NO.	TOTAL
STATE	FEDERAL				
S320-64-57.44 00	NHPP-0064 (497)D	1	KANAWHA		

BEARING PEDESTAL REPAIR TABLE

LOCATION	PEDESTAL ID	PEDESTAL TYPE	BACK STATION BEAM	AHEAD STATION BEAM	BACK STATION TOP OF PEDESTAL ELEVATION (B)	AHEAD STATION TOP OF PEDESTAL ELEVATION (A)	HEIGHT (B) (IN)	HEIGHT (A) (IN)	AA (IN)	BB (IN)	CC (IN)
C-WB	C-XB1	C	-	XB1	-	630.61	-	21 7/8	14	14	42
	C-XB2	C	-	XB2	-	630.61	-	21 7/8	14	14	42
C-EB	C-XB3	C	-	XB3	-	630.61	-	21 7/8	14	14	42
	C-XB4	C	-	XB4	-	630.61	-	21 7/8	14	14	42
E-WB	E-WB-G1	B	G1	EG1	628.29	628.20	10 5/8	9 5/8	33	33	60
	E-WB-G2	A	G2	-	628.48	-	10 15/16	-	33	33	60
	E-WB-G2A	A	-	G1	-	628.44	-	9 5/8	33	33	60
	E-WB-G3	B	G3	G2	628.72	628.55	12 15/16	10 15/16	33	33	60
	E-WB-G4	B	G4	G3	629.01	628.84	11 1/16	9 1/16	33	33	60
	E-WB-G5	B	G5	G4	629.17	629.00	11	9	33	33	60
	E-WB-G6	B	G6	G5	628.96	628.79	10 15/16	8 15/16	33	33	60
E-EB	E-EB-G1	B	G1	G1	628.96	628.79	11 4/8	9 4/8	33	33	60
	E-EB-G2	B	G2	G2	629.17	629.00	11 4/8	9 4/8	33	33	60
	E-EB-G3	B	G3	G3	629.01	628.84	11 9/16	9 5/8	33	33	60
	E-EB-G4	B	G4	G4	628.70	628.53	13 2/8	11 2/8	33	33	60
	E-EB-G5A	E	-	G5	-	628.48	-	10 9/16	33	33	60
	E-EB-G5	A	G5	-	628.13	-	10 15/16	-	33	33	60
	E-EB-G6	B	G6	FG2	627.95	627.87	11 5/8	10 5/8	33	33	60
EB	EB-EG1	A	EG1	-	614.22	-	9 11/16	-	24	24	30
	EB-EG2	A	EG2	-	613.79	-	9 11/16	-	24	24	30
R1-WB	R1-WB-XB1	A	XB1	-	621.58	-	19 15/16	-	24	24	26
	R1-WB-XB2	A	XB2	-	621.58	-	19 15/16	-	24	24	26
	RA-WB-XB3	A	XB3	-	621.58	-	19 15/16	-	24	24	26
R1-EB	R1-EB-XB1	A	XB1	-	621.58	-	19 15/16	-	24	24	26
	R1-EB-XB2	A	XB2	-	621.58	-	19 15/16	-	24	24	26
	RA-EB-XB3	A	XB3	-	621.58	-	19 15/16	-	24	24	26
FB	FB-FG1	A	FG1	-	617.11	-	10 11/16	-	24	24	30
	FB-FG2	A	FG2	-	616.45	-	10 11/16	-	24	24	30
Abut D	ABTD-G1	A	-	DG1	-	652.31	-	3/8	12	12	36
	ABTD-G2	A	-	DG2	-	651.95	-	3/8	12	12	36
	ABTD-G3	A	-	DG3	-	651.54	-	3/8	12	12	36
	ABTD-G4	A	-	DG4	-	651.18	-	3/8	12	12	36
D1	D1-DG1	B	DG1	DG1	654.01	654.01	9 11/16	9 11/16	27	27	57
	D1-DG2	B	DG2	DG2	653.63	653.63	9 11/16	9 11/16	27	27	57
	D1-DG3	B	DG3	DG3	653.25	653.25	9 11/16	9 11/16	27	27	57
	D1-DG4	B	DG4	DG4	652.89	652.89	9 11/16	9 11/16	27	27	57

NO.	REVISION	DATE	BY

WEST VIRGINIA DEPARTMENT OF TRANSPORTATION
DIVISION OF HIGHWAYS
ENGINEERING DIVISION

I-64 OVER KANAWHA RIVER
EUGENE A. CARTER MEMORIAL BRIDGE +3

PEDESTAL DESIGN TABLE (2 OF 2)

DESIGNED	DATE
JPV	11/25
DRAWN	
AFMO	11/25
CHECKED	
REVIEWED	

HDR ENGINEERING INC.
CONSULTING ENGINEERS
CHARLESTON, WV
681-341-6100

SHEET OF
BRIDGE NO. 2563.6

AGRIES $DD-MMM-YYYY HH:MM$ pw://pwhdruseas02.Intranet.hdr:HDR_US_East_02/Documents/WV_DOT/WVDOT-Eugene_Carter_Bridge_3/6.0_CAD_BIM/6.2_WIP/HDR/6.2.2_Sheet_Files/23_Structure/3.616 Pedestal Design Table (2 of 2)

PROJECT NUMBERS		DISTRICT	COUNTY	SHEET NO.	TOTAL
STATE	FEDERAL				
S320-64-57.44 00	NHPP-0064 (497)D	1	KANAWHA		

BEARING PEDESTAL REINFORCEMENT SCHEDULE

LOCATION	MARK	SIZE	LENGTH	NO.	TYPE	A	B	C	J	REMARKS
ABT AW	EP4001	4	xx'-xx"	##	xx	xx"	xx"	xx"		
	EP4002	4	xx'-xx"	##	xx	xx"	xx"	xx"		Anchor Hairpins
	EP6001	6	xx'-xx"	##	xx	xx"	xx"	xx"		
	EP6101	6	xx'-xx"	##	xx	xx"	xx"	xx"		
ABT AE	EP4003	4	xx'-xx"	##	xx	xx"	xx"	xx"		
	EP4004	4	xx'-xx"	##	xx	xx"	xx"	xx"		Anchor Hairpins
	EP6002	6	xx'-xx"	##	xx	xx"	xx"	xx"		
	EP6102	6	xx'-xx"	##	xx	xx"	xx"	xx"		
A3	EP4005	4	xx'-xx"	##	xx	xx"	xx"	xx"		
	EP4006	4	xx'-xx"	##	xx	xx"	xx"	xx"		Anchor Hairpins
	EP6003	6	xx'-xx"	##	xx	xx"	xx"	xx"		
	EP6103	6	xx'-xx"	##	xx	xx"	xx"	xx"		
A4	EP4007	4	xx'-xx"	##	xx	xx"	xx"	xx"		
	EP4008	4	xx'-xx"	##	xx	xx"	xx"	xx"		Anchor Hairpins
	EP6004	6	xx'-xx"	##	xx	xx"	xx"	xx"		
	EP6104	6	xx'-xx"	##	xx	xx"	xx"	xx"		
C8	EP4009	4	xx'-xx"	##	xx	xx"	xx"	xx"		
	EP4010	4	xx'-xx"	##	xx	xx"	xx"	xx"		Anchor Hairpins
	EP6005	6	xx'-xx"	##	xx	xx"	xx"	xx"		
	EP6105	6	xx'-xx"	##	xx	xx"	xx"	xx"		
A7	EP4011	4	xx'-xx"	##	xx	xx"	xx"	xx"		
	EP4012	4	xx'-xx"	##	xx	xx"	xx"	xx"		Anchor Hairpins
	EP6006	6	xx'-xx"	##	xx	xx"	xx"	xx"		
	EP6106	6	xx'-xx"	##	xx	xx"	xx"	xx"		
A8	EP4013	4	xx'-xx"	##	xx	xx"	xx"	xx"		
	EP4014	4	xx'-xx"	##	xx	xx"	xx"	xx"		Anchor Hairpins
	EP6007	6	xx'-xx"	##	xx	xx"	xx"	xx"		
	EP6107	6	xx'-xx"	##	xx	xx"	xx"	xx"		
D3	EP4015	4	xx'-xx"	##	xx	xx"	xx"	xx"		
	EP4016	4	xx'-xx"	##	xx	xx"	xx"	xx"		Anchor Hairpins
	EP6008	6	xx'-xx"	##	xx	xx"	xx"	xx"		
	EP6108	6	xx'-xx"	##	xx	xx"	xx"	xx"		
B-WB	EP4017	4	xx'-xx"	##	xx	xx"	xx"	xx"		
	EP4018	4	xx'-xx"	##	xx	xx"	xx"	xx"		Anchor Hairpins
	EP6009	6	xx'-xx"	##	xx	xx"	xx"	xx"		
	EP6109	6	xx'-xx"	##	xx	xx"	xx"	xx"		
B-EB	EP4019	4	xx'-xx"	##	xx	xx"	xx"	xx"		
	EP4020	4	xx'-xx"	##	xx	xx"	xx"	xx"		Anchor Hairpins
	EP6010	6	xx'-xx"	##	xx	xx"	xx"	xx"		
	EP6110	6	xx'-xx"	##	xx	xx"	xx"	xx"		

NO.	REVISION	DATE	BY

WEST VIRGINIA DEPARTMENT OF TRANSPORTATION
DIVISION OF HIGHWAYS
ENGINEERING DIVISION

I-64 OVER KANAWHA RIVER
EUGENE A. CARTER MEMORIAL BRIDGE +3

PEDESTAL REINFORCEMENT TABLE (1 OF 2)

DESIGNED	DATE
JPV	11/25
DRAWN	
AFMO	11/25
CHECKED	
REVIEWED	

HDR ENGINEERING INC.
CONSULTING ENGINEERS
CHARLESTON, WV
681-341-6100

SHEET OF
BRIDGE NO. 2563.6

AGRIES $DD-MMM-YYYY HH:MM$ pw://pwhdruseas02.intranet.hdr:HDR_US_East_02/Documents/WV_DOT/WVDOT-Eugene_Carter_Bridge_3/6.0_CAD_BIM/6.2_WIP/HDR/6.2.2_Sheet_Files/23_Structure/3.618 Pedestal Reinforcement Table (1 of 2)

PROJECT NUMBERS		DISTRICT	COUNTY	SHEET NO.	TOTAL
STATE	FEDERAL				
S320-64-57.44 00	NHPP-0064 (497)D	1	KANAWHA		

BEARING PEDESTAL REINFORCEMENT SCHEDULE

LOCATION	MARK	SIZE	LENGTH	NO.	TYPE	A	B	C	J	REMARKS
C-WB	EP4021	4	xx'-xx"	##	xx	xx"	xx"	xx"		
	EP4022	4	xx'-xx"	##	xx	xx"	xx"	xx"		Anchor Hairpins
	EP6011	6	xx'-xx"	##	xx	xx"	xx"	xx"		
	EP6111	6	xx'-xx"	##	xx	xx"	xx"	xx"		
C-EB	EP4023	4	xx'-xx"	##	xx	xx"	xx"	xx"		
	EP4024	4	xx'-xx"	##	xx	xx"	xx"	xx"		Anchor Hairpins
	EP6012	6	xx'-xx"	##	xx	xx"	xx"	xx"		
	EP6112	6	xx'-xx"	##	xx	xx"	xx"	xx"		
E-WB	EP4025	4	xx'-xx"	##	xx	xx"	xx"	xx"		
	EP4026	4	xx'-xx"	##	xx	xx"	xx"	xx"		Anchor Hairpins
	EP6013	6	xx'-xx"	##	xx	xx"	xx"	xx"		
	EP6113	6	xx'-xx"	##	xx	xx"	xx"	xx"		
E-EB	EP4027	4	xx'-xx"	##	xx	xx"	xx"	xx"		
	EP4028	4	xx'-xx"	##	xx	xx"	xx"	xx"		Anchor Hairpins
	EP6014	6	xx'-xx"	##	xx	xx"	xx"	xx"		
	EP6114	6	xx'-xx"	##	xx	xx"	xx"	xx"		
EB	EP4029	4	xx'-xx"	##	xx	xx"	xx"	xx"		
	EP4030	4	xx'-xx"	##	xx	xx"	xx"	xx"		Anchor Hairpins
	EP6015	6	xx'-xx"	##	xx	xx"	xx"	xx"		
	EP6115	6	xx'-xx"	##	xx	xx"	xx"	xx"		
R1-WB	EP4031	4	xx'-xx"	##	xx	xx"	xx"	xx"		
	EP4032	4	xx'-xx"	##	xx	xx"	xx"	xx"		Anchor Hairpins
	EP6016	6	xx'-xx"	##	xx	xx"	xx"	xx"		
	EP6116	6	xx'-xx"	##	xx	xx"	xx"	xx"		
R1-EB	EP4033	4	xx'-xx"	##	xx	xx"	xx"	xx"		
	EP4034	4	xx'-xx"	##	xx	xx"	xx"	xx"		Anchor Hairpins
	EP6017	6	xx'-xx"	##	xx	xx"	xx"	xx"		
	EP6117	6	xx'-xx"	##	xx	xx"	xx"	xx"		
FB	EP4035	4	xx'-xx"	##	xx	xx"	xx"	xx"		
	EP4036	4	xx'-xx"	##	xx	xx"	xx"	xx"		Anchor Hairpins
	EP6018	6	xx'-xx"	##	xx	xx"	xx"	xx"		
	EP6118	6	xx'-xx"	##	xx	xx"	xx"	xx"		
Abut D	EP4037	4	xx'-xx"	##	xx	xx"	xx"	xx"		
	EP4038	4	xx'-xx"	##	xx	xx"	xx"	xx"		Anchor Hairpins
	EP6019	6	xx'-xx"	##	xx	xx"	xx"	xx"		
	EP6119	6	xx'-xx"	##	xx	xx"	xx"	xx"		
D1	EP4039	4	xx'-xx"	##	xx	xx"	xx"	xx"		
	EP4040	4	xx'-xx"	##	xx	xx"	xx"	xx"		Anchor Hairpins
	EP6020	6	xx'-xx"	##	xx	xx"	xx"	xx"		
	EP6120	6	xx'-xx"	##	xx	xx"	xx"	xx"		

NO.	REVISION	DATE	BY

WEST VIRGINIA DEPARTMENT OF TRANSPORTATION
DIVISION OF HIGHWAYS
ENGINEERING DIVISION

I-64 OVER KANAWHA RIVER
EUGENE A. CARTER MEMORIAL BRIDGE +3

PEDESTAL REINFORCEMENT TABLE (2 OF 2)

DESIGNED	DATE
JPV	11/25
DRAWN	
AFMO	11/25
CHECKED	
REVIEWED	

HDR ENGINEERING INC.
CONSULTING ENGINEERS
CHARLESTON, WV
681-341-6100

SHEET OF

BRIDGE NO. 2563.6

AGRIES $DD-MMM-YYYY HH:MM$ pw://pwhdruseas02.intranet.hdr:HDR_US_East_02/Documents/WV_DOT/WVDOT-Eugene_Carter_Bridge_3/6.0_CAD_BIM/6.2_WIP/HDR/6.2.2_Sheet_Files/23_Structure/3.619 Pedestal Reinforcement Table (2 of 2)

PROJECT NUMBERS		DISTRICT	COUNTY	SHEET NO.	TOTAL
STATE	FEDERAL				
S320-64-57.44 00	NHPP-0064 (497)D	1	KANAWHA		

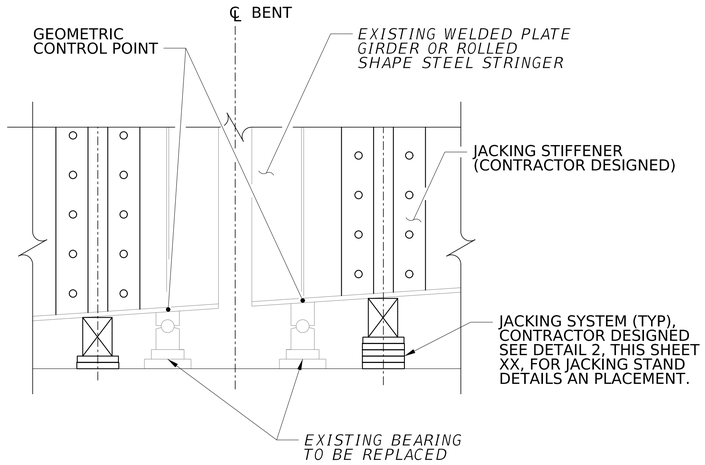

DETAIL 4
(NOT TO SCALE)

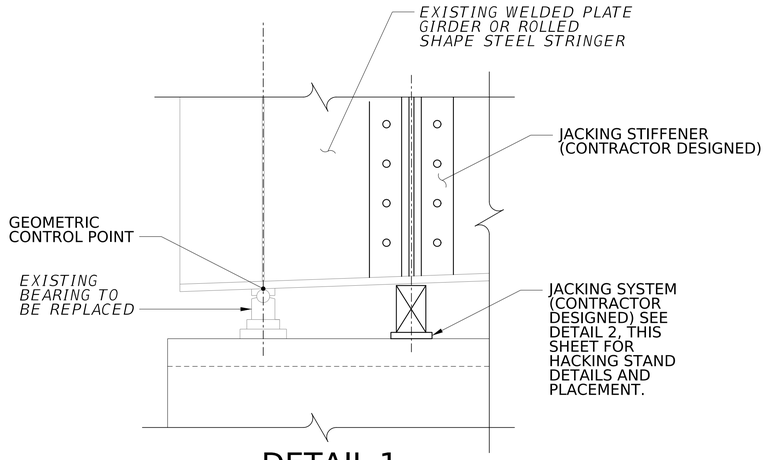

DETAIL 1
(NOT TO SCALE)

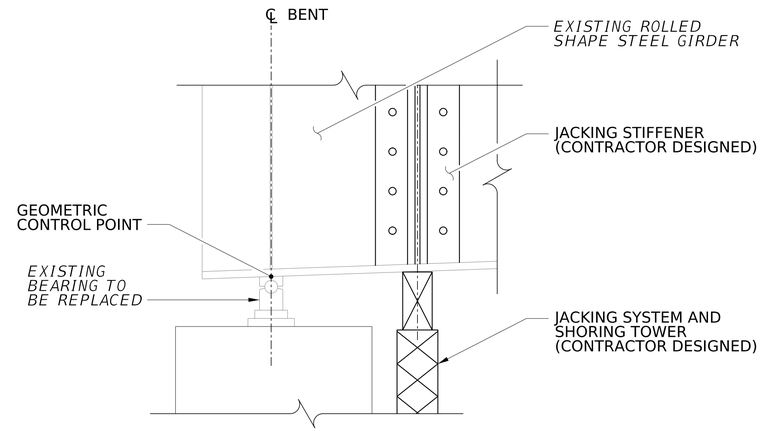

DETAIL 6
(NOT TO SCALE)

NOTE: UNLESS OTHERWISE NOT PERMITTED, THIS DETAIL MAY BE SUBSTITUTED FOR ANY OTHER JACKING DETAIL AT NO ADDITIONAL COST TO THE DEPARTMENT.

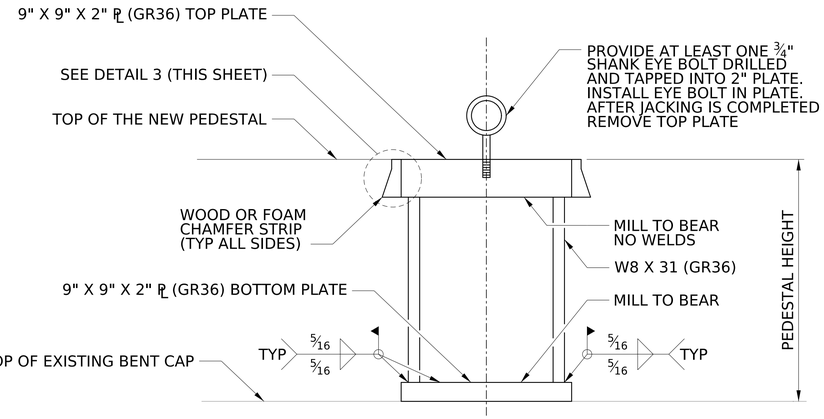

NOTE: WORK THIS DETAIL WITH DETAIL 1 AND 4, THIS SHEET. COORDINATE JACKING STAND WITH NEW PEDESTAL REINFORCEMENT, SEE SHEET J48. REMOVE PORTIONS OF EXISTING CONCRETE PEDESTAL THAT INTERFERE WITH THAT JACKS OR JACK STANDS. JACK STANDS ARE TO BE EXCASED IN NEW CONCRETE PEDESTAL. ITEM IS INCIDENTAL TO ITEM 615039-001.

DETAIL 2 - JACKING STAND
(NOT TO SCALE)

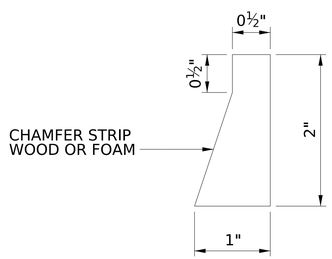

DETAIL 3
(NOT TO SCALE)

NOTES FOR JACKING AND BEARING REPLACEMENT:

SUBMIT THE PROPOSED JACKING AND/OR BEARING REPLACEMENT PROCEDURE TO THE DEPARTMENT FOR REVIEW AND APPROVAL PRIOR TO THE COMMENCEMENT OF ANY JACKING OPERATIONS.

THE JACKING CONTRACTOR IS RESPONSIBLE FOR DESIGNING THE JACKS AND THE JACKING PROCEDURES, INCLUDING THE LOCATIONS, BUT NOT LIMITED TO CHECKING CONCRETE BEARING STRESSES, STABILITY, AND STRINGER/GIRDER AND DETAIL STRESSES. PROVIDE JACKS WITH A MINIMUM SAFE JACKING CAPACITY OF 125 PERCENT OF THE LOAD TO BE JACKED.

FOR LOADS, SEE MAXIMUM JACKING LOAD TABLE. JACKING LOADS REPRESENT MAXIMUM STRINGER BEARING REACTIONS FROM THE STEEL SUPERSTRUCTURE ONLY. INCLUSION OF ANY ADDITIONAL CONSTRUCTION LOADS IS THE RESPONSIBILITY OF THE CONTRACTOR.

JACK AT ALL POINTS ACROSS THE STRUCTURE WIDTH INDICATED ON THE DRAWINGS SIMULTANEOUSLY AND WITH THE SAME DISPLACEMENT AND RATE OF DISPLACEMENT.

PROVIDE HYDRAULIC REGULATION DEVICES AS REQUIRED.

CENTER THE JACKS AT THE LOCATIONS INDICATED OR AS DETAILED IN THE JACKING PROCEDURE SUBMITTED TO THE DEPARTMENT.

ACCOUNT FOR ANY THERMAL MOVEMENTS AND ANY HORIZONTAL FORCES THAT MAY BE ENCOUNTERED DURING THE PERIOD WHEN THE SUPERSTRUCTURE IS BEING JACKED OR IS SHORED ON TEMPORARY SUPPORTS.

TRAFFIC IS NOT PERMITTED ON THE BRIDGE DURING ACTIVE JACKING (LIFTING OR LOWERING). LOCK-OFF THE JACK AND PROVIDE BLOCKING OR A SECONDARY SUPPORT FOR LOCATIONS WHERE TRAFFIC IS PERMITTED ON THE BRIDGE ONCE JACKED. ACCOUNT FOR THE EFFECTS OF VIBRATIONS DUE TO TRAFFIC ON THE BRIDGE AND ALSO NEAR THE SUPERSTRUCTURE UNIT ON WHICH JACKING IS TAKING PLACE OR WHILE THE SUPERSTRUCTURE IS SHORED ON TEMPORARY SUPPORTS.

DO NOT DAMAGE THE SUPERSTRUCTURE OR SUBSTRUCTURE WHEN JACKING AND REPLACING THE BEARINGS.

THE MAXIMUM ALLOWABLE JACKING DISPLACEMENT OF THE SUPERSTRUCTURE IS ONE INCH (1") VERTICAL.

PROVIDE RESTRAINT AGAINST TRANSVERSE WIND LOADING DURING JACKING OPERATIONS.

JACKING STIFFENERS TO REMAIN AFTER CONSTRUCTION. FABRICATE IN ACCORDANCE WITH SECTION 615. PAINT IN ACCORDANCE WITH SECTION 687 AND 688. SHOP PAINT WHERE POSSIBLE.

NO.	REVISION	DATE	BY

WEST VIRGINIA DEPARTMENT OF TRANSPORTATION
DIVISION OF HIGHWAYS
ENGINEERING DIVISION

I-64 OVER KANAWHA RIVER
EUGENE A. CARTER MEMORIAL BRIDGE +3

JACKING DETAILS
(1 OF 4)

DESIGNED	DATE
JPV	11/25
DRAWN	
AFMO	11/25
CHECKED	
REVIEWED	

HDR ENGINEERING INC.
CONSULTING ENGINEERS
CHARLESTON, WV
681-341-6100

SHEET OF
BRIDGE NO. 2563.6

AGRIES $DD-MMM-YYYY HH:MM$ pw://pwhdruseas02.Intranet.hdr:HDR_US_East_02/Documents/WV_DOT/WVDOT-Eugene_Carter_Bridge_3/6.0_CAD_BIM/6.2_WIP/HDR/6.2.2_Sheet_Files/23_Structure/3.625 Jacking Details.dgn

PROJECT NUMBERS		DISTRICT	COUNTY	SHEET NO.	TOTAL
STATE	FEDERAL				
S320-64-57.44 00	NHPP-0064 (497)D	1	KANAWHA		

THE FOLLOWING ADDITIONAL SHEETS ARE TO BE DEVELOPED ALONG WITH THE APPROXIMATE NUMBER OF SHEETS:

JACKING DETAILS AT FLOORBEAMS - 1 SHEET
JACKING LOAD TABLES - 1 SHEET

NO.	REVISION	DATE	BY

WEST VIRGINIA DEPARTMENT OF TRANSPORTATION
DIVISION OF HIGHWAYS
ENGINEERING DIVISION

I-64 OVER KANAWHA RIVER
EUGENE A. CARTER MEMORIAL BRIDGE +3

ADDITIONAL JACKING DETAILS TO BE DEVELOPED

DESIGNED	DATE
DRAWN	
CHECKED	
REVIEWED	

HDR ENGINEERING INC.
CONSULTING ENGINEERS
CHARLESTON, WV
681-341-6100

SHEET OF
BRIDGE NO. 2563.6

SNOLEN $DD-MMM-YYYY HH:MM$ pw://pwhdruseas02.intranet.hdr:HDR_US_East_02/Documents/WV_DOT/WVDOT-Eugene_Carter_Bridge_3/6.0_CAD_BIM/6.2_WIP/HDR/6.2.2_Sheet_Files/23_Structure/Reference/str_ref_bdr_Eugene Carter Memorial.dgn

PROJECT NUMBERS		DISTRICT	COUNTY	SHEET NO.	TOTAL
STATE	FEDERAL				
S320-64-57.44 00	NHPP-0064 (497)D	1	KANAWHA		

MAXIMUM JACKING LOAD TABLE - RAMP E		
STRUCTURE	LOCATION	STEEL DEAD LOAD (KIPS)
RAMP E	ABUTMENT E	8
RAMP E	PIER EC	20

MAXIMUM JACKING LOAD TABLE - RAMP F		
STRUCTURE	LOCATION	STEEL DEAD LOAD (KIPS)
RAMP F	ABUTMENT F	6
RAMP F	PIER FC	20

GEOMETRIC CONTROL

PRIOR TO JACKING, SURVEY TO ESTABLISH AN ELEVATION AT THE GEOMETRIC CONTROL POINT FOR EACH GIRDER TO BE JACKED SUCH THAT THE STRUCTURE CAN BE RESET TO THIS ELEVATION ONCE THE BEARING IS REPLACED AND THE JACKING IS COMPLETE.

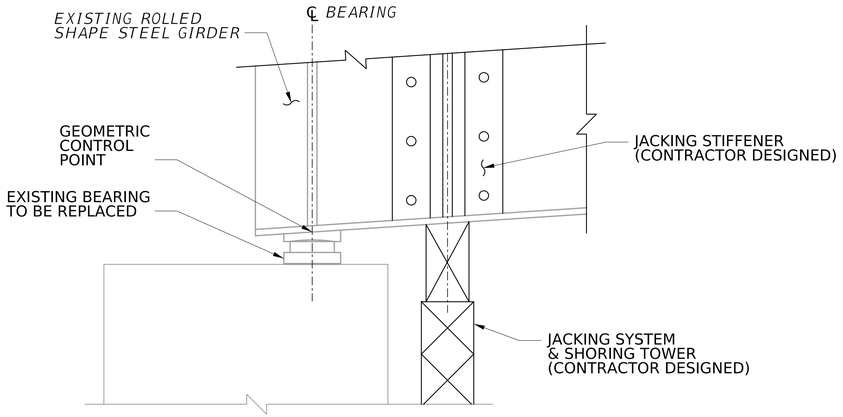

DETAIL

(ABUTMENT SHOWN, PIER SIMILAR)
NOT TO SCALE

NOTES FOR JACKING AND BEARING REPLACEMENT:

SUBMIT THE PROPOSED JACKING AND/OR BEARING REPLACEMENT PROCEDURE TO THE DEPARTMENT FOR REVIEW AND APPROVAL PRIOR TO THE COMMENCEMENT OF ANY JACKING OPERATIONS.

THE JACKING CONTRACTOR IS RESPONSIBLE FOR DESIGNING THE JACKS AND THE JACKING PROCEDURES, INCLUDING THE LOCATIONS, BUT NOT LIMITED TO CHECKING CONCRETE BEARING STRESSES, STABILITY, AND GIRDER AND DETAIL STRESSES. PROVIDE JACKS WITH A MINIMUM SAFE JACKING CAPACITY OF 125 PERCENT OF THE LOAD TO BE JACKED.

FOR LOADS, SEE MAXIMUM JACKING LOAD TABLE. JACKING LOADS REPRESENT MAXIMUM GIRDER BEARING REACTIONS FROM THE STEEL SUPERSTRUCTURE ONLY. INCLUSION OF ANY ADDITIONAL CONSTRUCTION LOADS IS THE RESPONSIBILITY OF THE CONTRACTOR.

JACK AT ALL POINTS ACROSS THE STRUCTURE WIDTH INDICATED ON THE DRAWINGS SIMULTANEOUSLY AND WITH THE SAME DISPLACEMENT AND RATE OF DISPLACEMENT.

PROVIDE HYDRAULIC REGULATION DEVICES AS REQUIRED.

CENTER THE JACKS AT THE LOCATIONS INDICATED OR AS DETAILED IN THE JACKING PROCEDURES SUBMITTED TO THE DEPARTMENT.

ACCOUNT FOR ANY THERMAL MOVEMENTS AND ANY HORIZONTAL FORCES THAT MAY BE ENCOUNTERED DURING THE PERIOD WHEN THE SUPERSTRUCTURE IS BEING JACKED OR IS SHORED ON TEMPORARY SUPPORTS.

COORDINATE BEARING REPLACEMENT TO OCCUR AFTER THE EXISTING DECK REMOVAL AND PRIOR TO PLACEMENT OF NEW DECK.

DO NOT DAMAGE THE SUPERSTRUCTURE OR SUBSTRUCTURE WHEN JACKING AND REPLACING THE BEARINGS.

THE MAXIMUM ALLOWABLE JACKING DISPLACEMENT OF THE SUPERSTRUCTURE IS ONE INCH (1") VERTICAL.

PROVIDE RESTRAINT AGAINST TRANSVERSE WIND LOADING DURING JACKING OPERATIONS.

JACKING STIFFENERS TO REMAIN AFTER CONSTRUCTION. FABRICATE IN ACCORDANCE WITH SECTION 615. PAINT IN ACCORDANCE WITH SECTION 687 AND 688. SHOP PAINT WHERE POSSIBLE.

NOTES:

1. FOR GENERAL NOTES, SEE SHEETS XX THRU XX.
2. SEE FRAMING PLAN FOR BEARING REPLACEMENT LOCATIONS.

NO.	REVISION	DATE	BY

WEST VIRGINIA DEPARTMENT OF TRANSPORTATION
DIVISION OF HIGHWAYS
ENGINEERING DIVISION

I-64 OVER KANAWHA RIVER
EUGENE A. CARTER MEMORIAL BRIDGE +3

JACKING DETAILS (4 OF 4)

DESIGNED	DATE
MAB	12/25
DRAWN	
DJC	12/25
CHECKED	
REVIEWED	

Mead & Hunt

MEAD & HUNT INC.
CONSULTING ENGINEERS
CHARLESTON, WV
304-345-6712

SHEET OF

BRIDGE NO. 2563.6

1420djc $DD-MMM-YYYY HH:MM$ X:\324160025191 1.01\TECH\Structures\Ramp E\sheets\str_gir_007_Ramp E_Eugene Carter Memorial Bridge.dgn

PROJECT NUMBERS		DISTRICT	COUNTY	SHEET NO.	TOTAL
STATE	FEDERAL				
S320-64-57.44 00	NHPP-0064 (497)D	1	KANAWHA		

THE FOLLOWING ADDITIONAL SHEETS ARE TO BE DEVELOPED ALONG WITH THE APPROXIMATE NUMBER OF SHEETS:

DECK GEOMETRY PLAN - CA GORE - 1 SHEET
DECK GEOMETRY PLAN - DA GORE - 1 SHEET
DECK GEOMETRY PLAN - DE GORE - 1 SHEET
DECK GEOMETRY PLAN - DF GORE - 1 SHEET

NO.	REVISION	DATE	BY

WEST VIRGINIA DEPARTMENT OF TRANSPORTATION
DIVISION OF HIGHWAYS
ENGINEERING DIVISION

I-64 OVER KANAWHA RIVER
EUGENE A. CARTER MEMORIAL BRIDGE +3

ADDITIONAL SHEETS TO BE DEVELOPED

DESIGNED	DATE
DRAWN	
CHECKED	
REVIEWED	

HDR ENGINEERING INC.
CONSULTING ENGINEERS
CHARLESTON, WV
681-341-6100

SHEET OF
BRIDGE NO. 2563.6

SNOLEN $DD-MMM-YYYY HH:MM$ pw://pwhdruseas02.intranet.hdr:HDR_US_East_02/Documents/WV_DOT/WVDOT-Eugene_Carter_Bridge_3/6.0_CAD_BIM/6.2_WIP/HDR/6.2.2_Sheet_Files/23_Structure/Reference/str_ref_bdr_Eugene Carter Memorial.dgn

PROJECT NUMBERS		DISTRICT	COUNTY	SHEET NO.	TOTAL
STATE	FEDERAL				
S320-64-57.44 00	NHPP-0064 (497)D	1	KANAWHA		

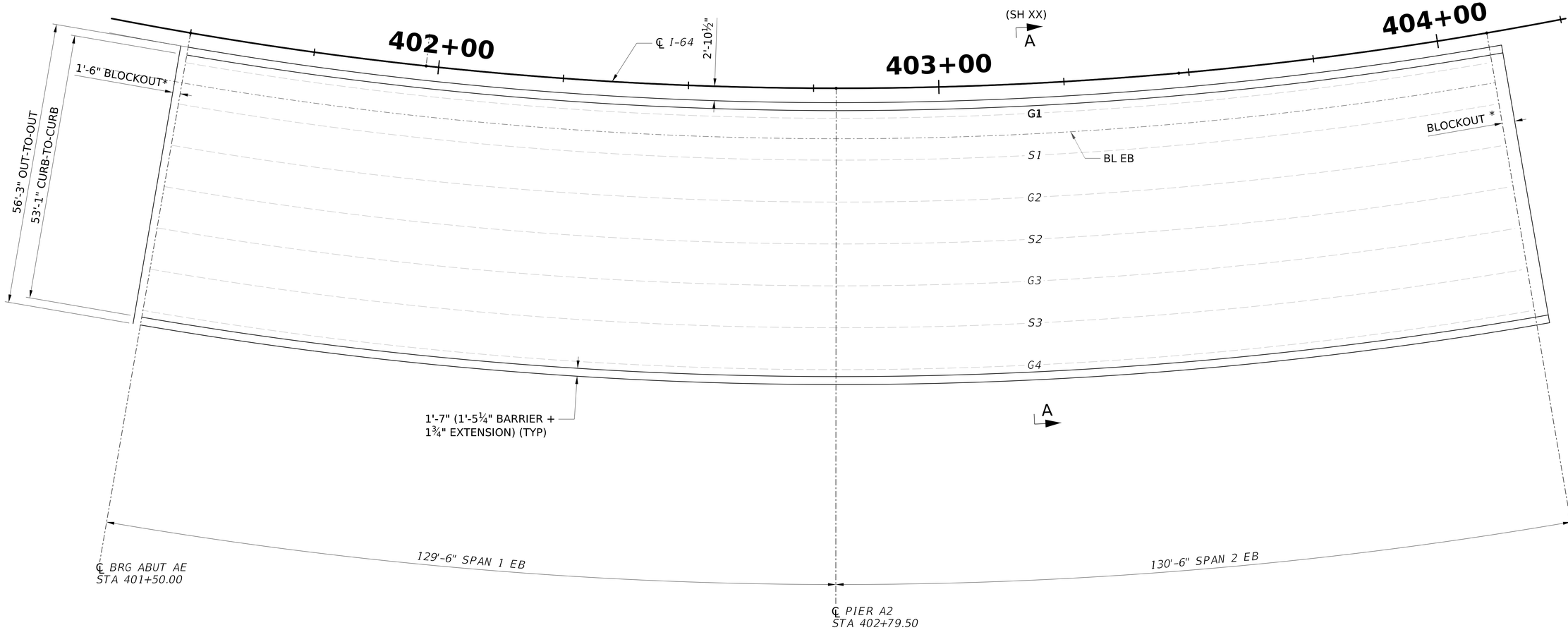

DECK PLACEMENT PLAN (EB)

(SPAN 1 AND SPAN 2)

SCALE : 2 0 4 8 12 ft.

3/32" = 1'-0"

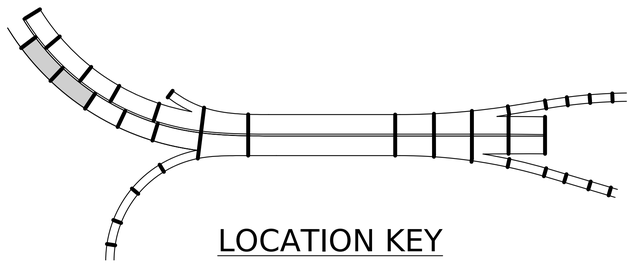

LOCATION KEY

* - FOR BLOCKOUT DETAILS AND REINFORCEMENT, SEE SHEET XX.

MIN LAP LENGTHS

DECK BAR LAPS
#4 = 1'-7"
#5 = 2'-0"
#6 = 2'-5"

BARRIER BAR LAPS
#5 = 2'-7"
#7 = 3'-1"
#8 = 4'-1"

NOTES:

1. FOR GENERAL NOTES, SEE SHEETS THRU .
2. FOR DECK PLACEMENT NOTES, SEE SHEET .

NO.	REVISION	DATE	BY

WEST VIRGINIA DEPARTMENT OF TRANSPORTATION
DIVISION OF HIGHWAYS
ENGINEERING DIVISION

I-64 OVER KANAWHA RIVER
EUGENE A. CARTER MEMORIAL BRIDGE +3
DECK PLACEMENT PLAN (EB)
SPAN 1 AND SPAN 2

DESIGNED	DATE
KCO	10/25
DRAWN	
SCN	10/25
CHECKED	
REVIEWED	

HDR ENGINEERING INC.
CONSULTING ENGINEERS
CHARLESTON, WV
681-341-6100

SHEET OF

BRIDGE NO. 2563.6

pw://pwhdruseas02.intranet.hdr:HDR_US_East_02/Documents/WV_DOT/WVDOT-Eugene_Carter_Bridge_3/6.0_CAD_BIM/6.2_WIP/HDR/6.2.2_Sheet_Files/23_Structure/4.010 Deck Plan Spans 1-2 EB
$DD-MMM-YYYY HH:MM$
SNOLEN

PROJECT NUMBERS		DISTRICT	COUNTY	SHEET NO.	TOTAL
STATE	FEDERAL				
S320-64-57.44 00	NHPP-0064 (497)D	1	KANAWHA		

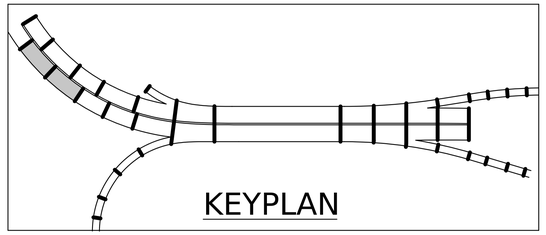

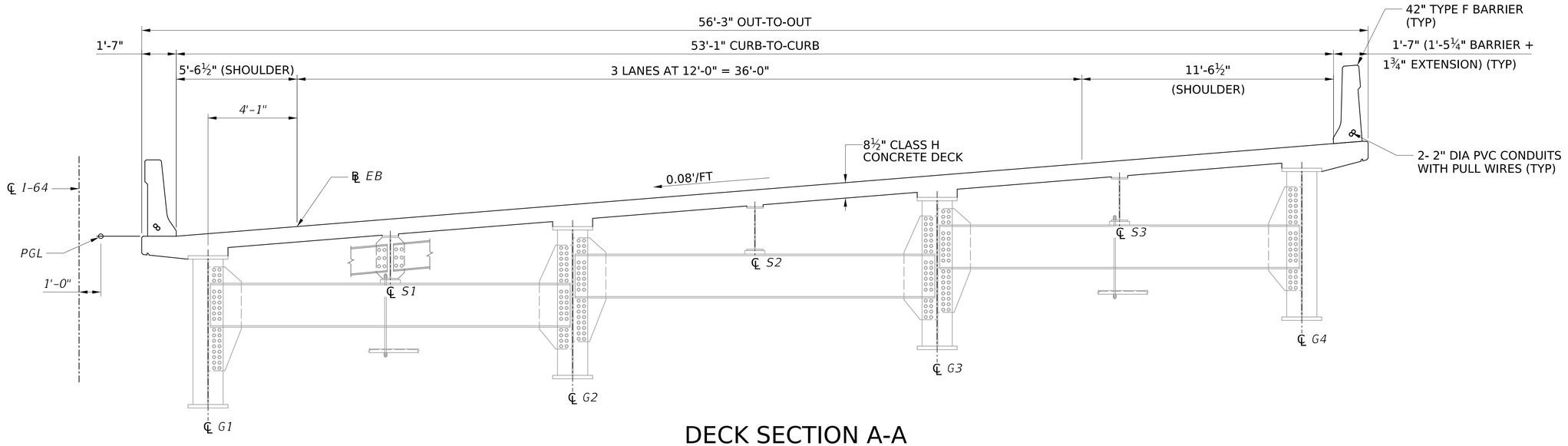

DECK SECTION A-A

NOTES:

1. FOR GENERAL NOTES, SEE SHEETS THRU .
2. FOR TYPICAL DECK SECTION, SEE SHEET .
3. ALL REINFORCING STEEL IN THE DECK AND BARRIER SHALL BE GALVANIZED.
4. FOR DECK AND BARRIER REINFORCEMENT SCHEDULE, SEE SHEET .
5. FOR FINISHED DECK ELEVATIONS, SEE SHEETS THRU .
6. FOR MODULAR EXPANSION JOINT DETAILS, SEE SHEETS THRU .
7. ALL BAR SPACINGS SHOWN ARE MAXIMUM SPACING. SET TRANSVERSE BARS IN CURVED DECKS WITH A MAXIMUM SPACING ALONG THE OUTSIDE (LARGEST RADIUS) EDGE OF DECK, IN CURVED DECKS.
8. FOR SCUPPER DETAILS, SEE SHEETS AND . FOR LOCATIONS SEE SHEET .
9. FOR ADDITIONAL REINFORCEMENT AT SCUPPERS, SEE SHEET .
10. FOR DECK QUANTITIES, SEE SHEET .
11. (#) INDICATES DECK POURING SEQUENCE. CONCRETE IN A PRECEDING POUR MUST OBTAIN A COMPRESSIVE STRENGTH OF 3000 PSI BEFORE CONCRETE MAY BE PLACED IN A SUCCEEDING ADJACENT POUR.
12. NO CONSTRUCTION EQUIPMENT WITH AN AXLE LOAD GREATER THAN 20,000 POUNDS SHALL BE PERMITTED ON THE SLAB AT ANY TIME.
13. NO CONSTRUCTION EQUIPMENT OR LOADS THAT ARE NOT REQUIRED TO COMPLETE THE SLAB, BARRIERS OR OTHER APPURTENANCES SHALL BE ALLOWED ON THE BRIDGE DECK.
14. MOVEMENT OF FINISHING MACHINE AS REQUIRED DURING DECK PLACEMENT OPERATION IS PERMISSIBLE.

SCALE : 1 0 1 2 3 ft.
⅜" = 1'-0"

NO.	REVISION	DATE	BY

WEST VIRGINIA DEPARTMENT OF TRANSPORTATION
DIVISION OF HIGHWAYS
ENGINEERING DIVISION

I-64 OVER KANAWHA RIVER
EUGENE A. CARTER MEMORIAL BRIDGE +3
DECK SECTION (EB)
SPAN 1 AND SPAN 2

DESIGNED	DATE
KCO	08/25
DRAWN	
SCN	08/25
CHECKED	
REVIEWED	

HDR ENGINEERING INC.
CONSULTING ENGINEERS
CHARLESTON, WV
681-341-6100

SHEET OF
BRIDGE NO. 2563.6

SNOLEN $DD-MMM-YYYY HH:MM$ pw://pwhdruseas02.intranet.hdr-HDR_US_East_02/Documents/WV_DOT/WVDOT-Eugene_Carter_Bridge_3/6.0_CAD_BIM/6.2_WIP/HDR/6.2.2_Sheet_Files/23_Structure/4.011 Spans A1-A2 Typical Section EB

PROJECT NUMBERS		DISTRICT	COUNTY	SHEET NO.	TOTAL
STATE	FEDERAL				
S320-64-57.44 00	NHPP-0064 (497)D	1	KANAWHA		

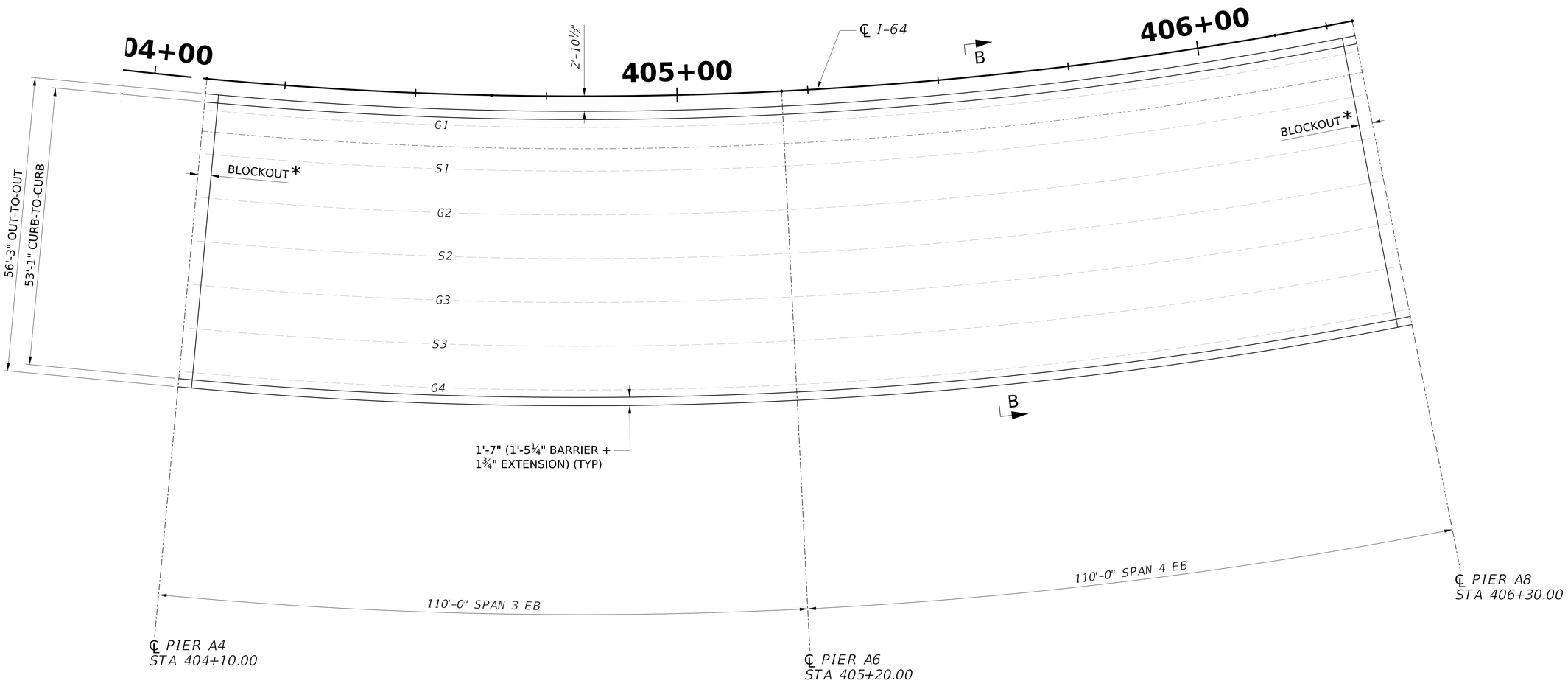

DECK PLACEMENT PLAN (EB)

(SPAN 3 AND SPAN 4)

SCALE : 2 0 4 8 12 ft.

3/32" = 1'-0"

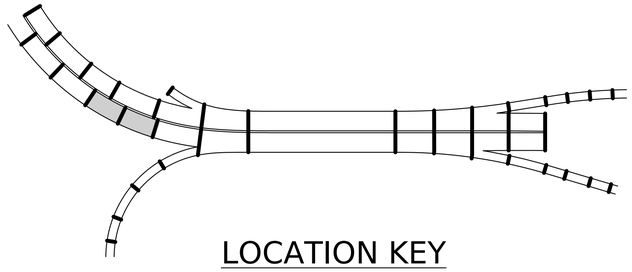

LOCATION KEY

MIN LAP LENGTHS

DECK BAR LAPS
#4 = 1'-7"
#5 = 2'-0"
#6 = 2'-5"

BARRIER BAR LAPS
#5 = 2'-7"
#7 = 3'-7"
#8 = 4'-1"

NOTES:

1. FOR GENERAL NOTES, SEE SHEETS THRU .
2. FOR DECK PLACEMENT NOTES, SEE SHEET .

NO.	REVISION	DATE	BY

WEST VIRGINIA DEPARTMENT OF TRANSPORTATION
DIVISION OF HIGHWAYS
ENGINEERING DIVISION

I-64 OVER KANAWHA RIVER
EUGENE A. CARTER MEMORIAL BRIDGE +3

DECK PLACEMENT PLAN (EB)
SPAN 3 AND SPAN 4

DESIGNED	KCO	DATE	10/25
DRAWN	SCN		10/25
CHECKED			
REVIEWED			

HDR ENGINEERING INC.
CONSULTING ENGINEERS
CHARLESTON, WV
681-341-6100

SHEET
OF
BRIDGE NO.
2563.6

SNOLEN $DD-MMM-YYYY HH:MM$ pw://pwhdruseas02.intranet.hdr:HDR_US_East_02/Documents/WV_DOT/WVDOT-Eugene_Carter_Bridge_3/6.0_CAD_BIM/6.2_WIP/HDR/6.2.2_Sheet_Files/23_Structure/4.012 Deck Plan Spans 3-4 EB

PROJECT NUMBERS		DISTRICT	COUNTY	SHEET NO.	TOTAL
STATE	FEDERAL				
S320-64-57.44 00	NHPP-0064 (497)D	1	KANAWHA		

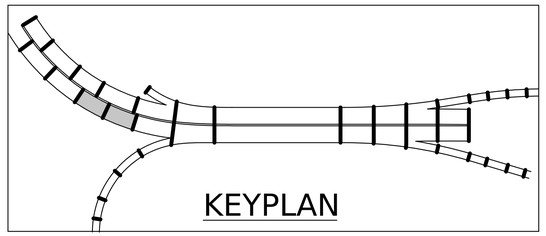

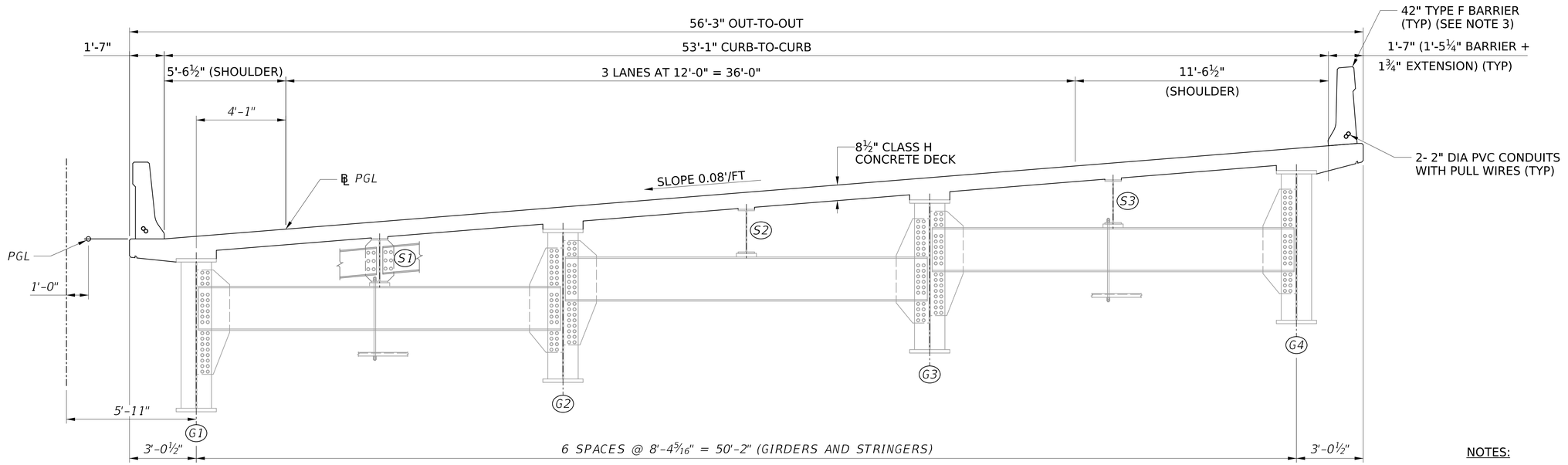

DECK SECTION B-B

NOTES:

1. FOR GENERAL NOTES, SEE SHEETS AND .
2. FOR DECK PLACEMENT NOTES, SEE SHEET .

SCALE : 1 0 1 2 3 ft.
⅜" = 1'-0"

NO.	REVISION	DATE	BY

WEST VIRGINIA DEPARTMENT OF TRANSPORTATION
DIVISION OF HIGHWAYS
ENGINEERING DIVISION

I-64 OVER KANAWHA RIVER
EUGENE A. CARTER MEMORIAL BRIDGE +3
DECK SECTION (EB)
SPAN 3 AND SPAN 4

DESIGNED	DATE
KCO	08/25
DRAWN	
SCN	08/25
CHECKED	
REVIEWED	

HDR ENGINEERING INC.
CONSULTING ENGINEERS
CHARLESTON, WV
681-341-6100

SHEET OF
BRIDGE NO. 2563.6

SNOLEN $DD-MMM-YYYY HH:MM$ pw://pwhdruseas02.intranet.hdr:HDR_US_East_02/Documents/WV_DOT/WVDOT-Eugene_Carter_Bridge_3/6.0_CAD_BIM/6.2_WIP/HDR/6.2.2_Sheet_Files/23_Structure/4.013 Spans A3-A4 Typical Section EB

PROJECT NUMBERS		DISTRICT	COUNTY	SHEET NO.	TOTAL
STATE	FEDERAL				
S320-64-57.44 00	NHPP-0064 (497)D	1	KANAWHA		

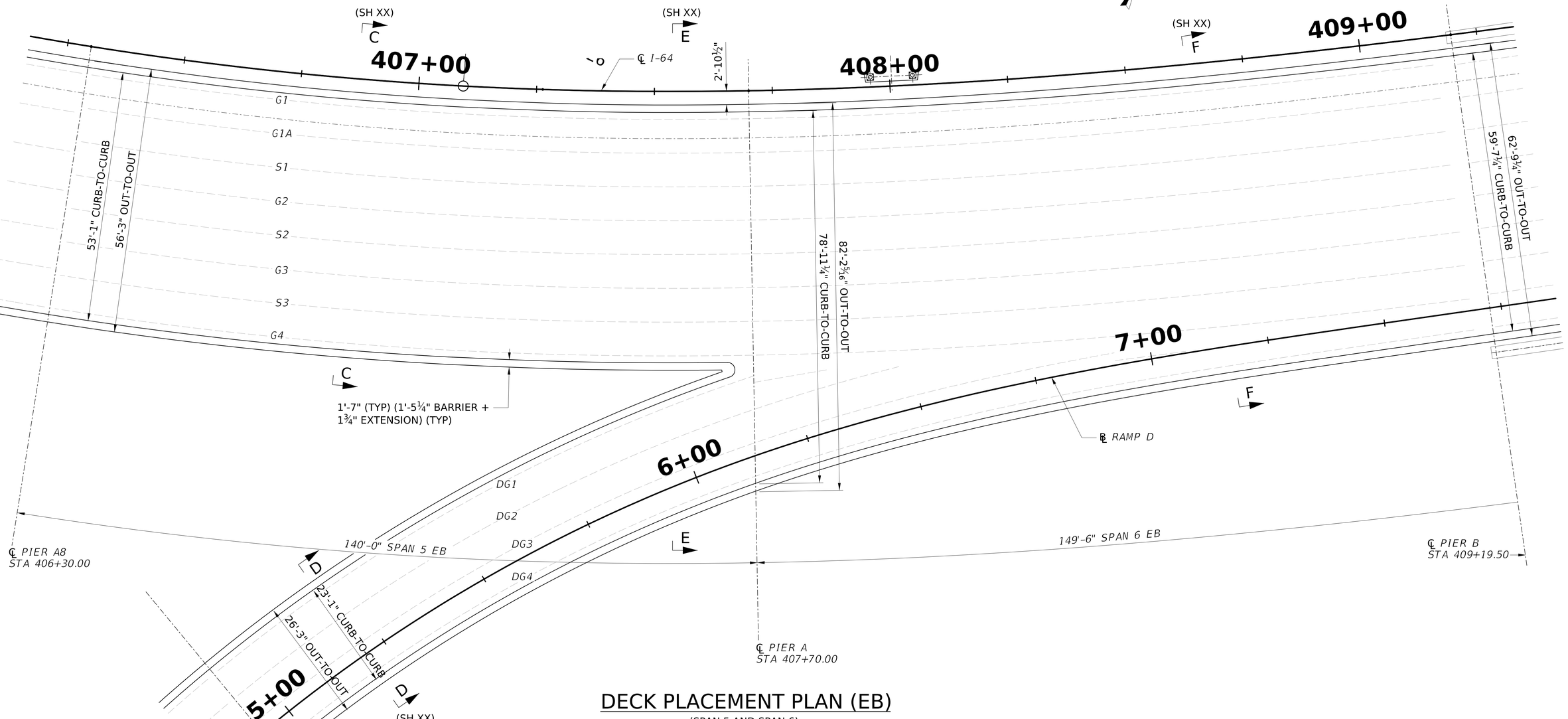

DECK PLACEMENT PLAN (EB)

(SPAN 5 AND SPAN 6)

SCALE : 2 0 4 8 12 ft.

3⁄32" = 1'-0"

LOCATION KEY

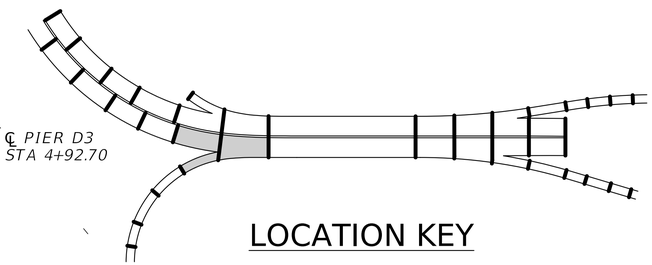

MIN LAP LENGTHS

DECK BAR LAPS
#4 = 1'-7"
#5 = 2'-0"
#6 = 2'-5"

BARRIER BAR LAPS
#5 = 2'-7"
#7 = 3'-7"
#8 = 4'-1"

NOTES:

1. FOR GENERAL NOTES, SEE SHEETS THRU .
2. FOR DECK PLACEMENT NOTES, SEE SHEET .

NO.	REVISION	DATE	BY

WEST VIRGINIA DEPARTMENT OF TRANSPORTATION
DIVISION OF HIGHWAYS
ENGINEERING DIVISION

I-64 OVER KANAWHA RIVER
EUGENE A. CARTER MEMORIAL BRIDGE +3
DECK PLACEMENT PLAN (EB)
SPAN 5, SPAN 6 AND SPAN DA

DESIGNED	DATE
KCO	10/25
DRAWN	
SCN	10/25
CHECKED	
REVIEWED	

HDR ENGINEERING INC.
CONSULTING ENGINEERS
CHARLESTON, WV
681-341-6100

SHEET OF

BRIDGE NO. 2563.6

$DD-MMM-YYYY HH:MM$
SNOLEN
pw://pwhdruseas02.intranet.hdr:HDR_US_East_02/Documents/WV_DOT/WVDOT-Eugene_Carter_Bridge_3/6.0_CAD_BIM/6.2_WIP/HDR/6.2.2_Sheet_Files/23_Structure/4.015 Deck Plan Spans 5-6 EB

PROJECT NUMBERS		DISTRICT	COUNTY	SHEET NO.	TOTAL
STATE	FEDERAL				
S320-64-57.44 00	NHPP-0064 (497)D	1	KANAWHA		

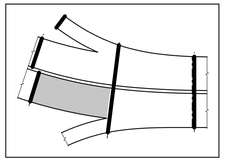

KEY PLAN

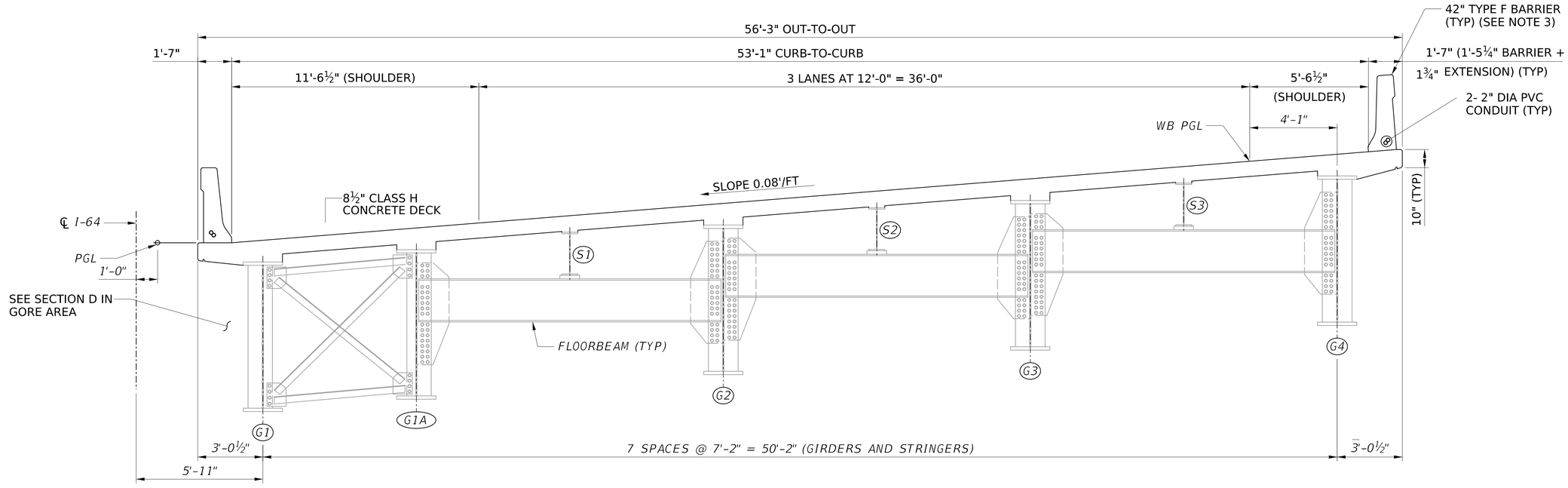

DECK SECTION C-C

NOTES:

1. FOR GENERAL NOTES, SEE SHEETS AND .
2. FOR DECK PLACEMENT NOTES, SEE SHEET .

SCALE : 1 0 1 2 3 ft.
⅜" = 1'-0"

NO.	REVISION	DATE	BY

WEST VIRGINIA DEPARTMENT OF TRANSPORTATION
DIVISION OF HIGHWAYS
ENGINEERING DIVISION

I-64 OVER KANAWHA RIVER
EUGENE A. CARTER MEMORIAL BRIDGE +3

DECK SECTION (EB) SPAN 5, SPAN 6, AND SPAN DA (1 OF 4)

DESIGNED	DATE
KCO	08/25
DRAWN	
SCN	08/25
CHECKED	
REVIEWED	

HDR ENGINEERING INC.
CONSULTING ENGINEERS
CHARLESTON, WV
681-341-6100

SHEET OF
BRIDGE NO. 2563.6

pw://pwhdruseas02.intranet.hdr:HDR_US_East_02/Documents/WV_DOT/WVDOT-Eugene_Carter_Bridge_3/6.0_CAD_BIM/6.2_WIP/HDR/6.2.2_Sheet_Files/23_Structure/4.016 Spans A5 Typical Section EB
$DD-MMM-YYYY HH:MM$
SNOLEN

PROJECT NUMBERS		DISTRICT	COUNTY	SHEET NO.	TOTAL
STATE	FEDERAL				
S320-64-57.44 00	NHPP-0064 (497)D	1	KANAWHA		

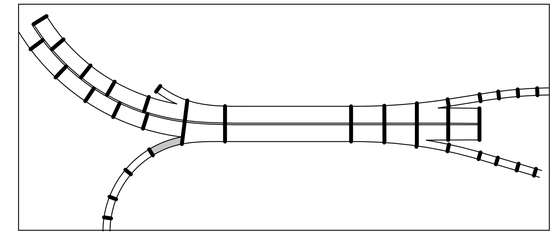

KEY PLAN

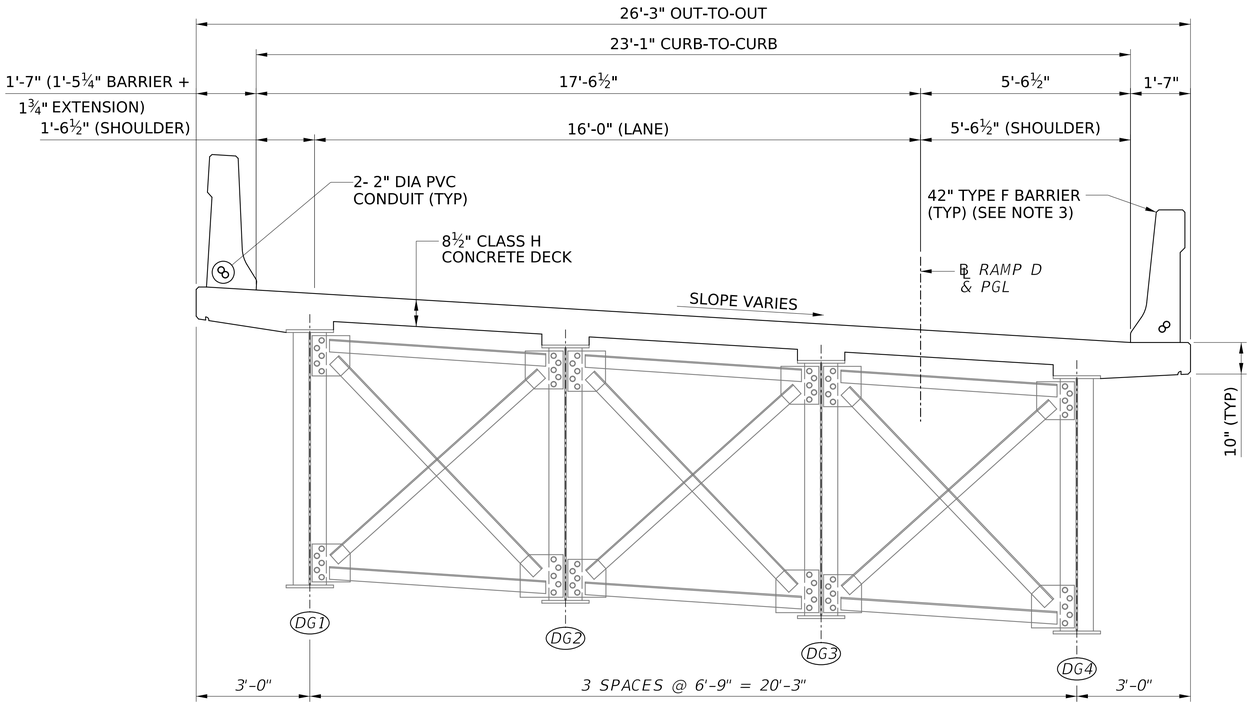

DECK SECTION D-D

NOTES:

1. FOR GENERAL NOTES, SEE SHEETS AND .
2. FOR DECK PLACEMENT NOTES, SEE SHEET .

SCALE : 1 0 1 2 ft.
½" = 1'-0"

NO.	REVISION	DATE	BY

WEST VIRGINIA DEPARTMENT OF TRANSPORTATION
DIVISION OF HIGHWAYS
ENGINEERING DIVISION

I-64 OVER KANAWHA RIVER
EUGENE A. CARTER MEMORIAL BRIDGE +3

DECK SECTION (EB) SPAN 5, SPAN 6 AND SPAN DA (2 OF 4)

DESIGNED	DATE
KCO	08/25
DRAWN	
SCN	08/25
CHECKED	
REVIEWED	

HDR ENGINEERING INC.
CONSULTING ENGINEERS
CHARLESTON, WV
681-341-6100

SHEET OF

BRIDGE NO. 2563.6

SNOLEN $DD-MMM-YYYY HH:MM$ pw://pwhdrusess02.intranet.hdr:HDR_US_East_02/Documents/WV_DOT/WVDOT-Eugene_Carter_Bridge_3/6.0_CAD_BIM/6.2_WIP/HDR/6.2.2_Sheet_Files/23_Structure/4.017 Typical Section Ramp D

PROJECT NUMBERS		DISTRICT	COUNTY	SHEET NO.	TOTAL
STATE	FEDERAL				
S320-64-57.44 00	NHPP-0064 (497)D	1	KANAWHA		

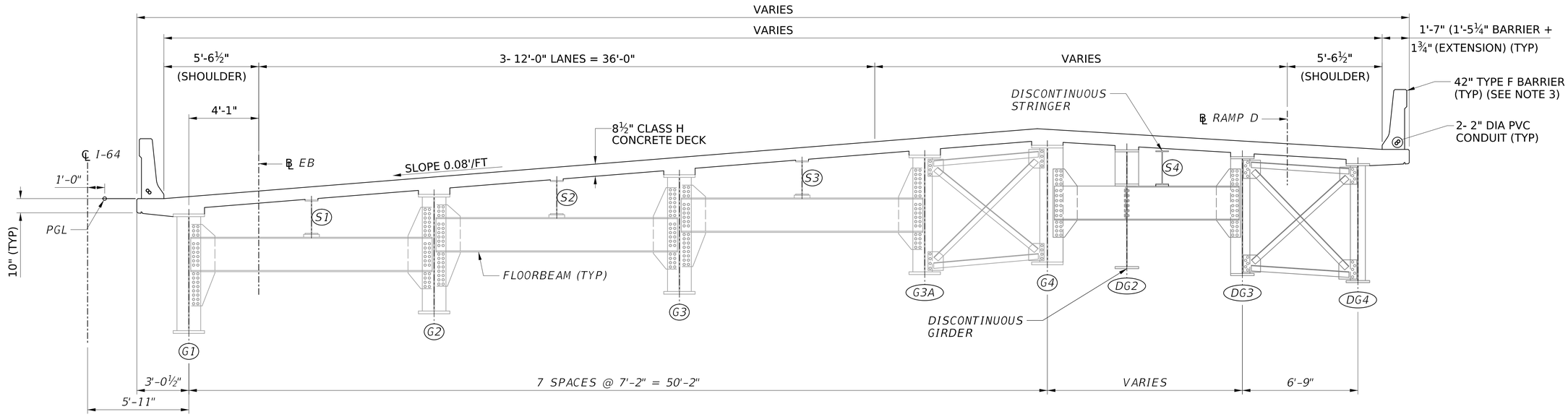

DECK SECTION E-E

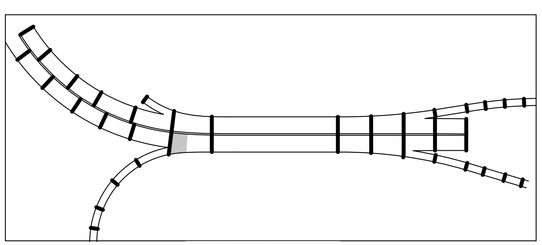

KEY PLAN

NOTES:

1. FOR GENERAL NOTES, SEE SHEETS AND .
2. FOR DECK PLACEMENT NOTES, SEE SHEET .

NOT TO SCALE

NO.	REVISION	DATE	BY

WEST VIRGINIA DEPARTMENT OF TRANSPORTATION
DIVISION OF HIGHWAYS
ENGINEERING DIVISION

I-64 OVER KANAWHA RIVER
EUGENE A. CARTER MEMORIAL BRIDGE +3

DECK SECTION (EB) SPAN 5, SPAN 6 AND SPAN DA (3 OF 4)

DESIGNED	DATE
KCO	08/25
DRAWN	
SCN	08/25
CHECKED	
REVIEWED	

HDR ENGINEERING INC.
CONSULTING ENGINEERS
CHARLESTON, WV
681-341-6100

SHEET $TYP06$ OF

BRIDGE NO. 2563.6

SNOLEN $DD-MMM-YYYY HH:MM$ pw://pwhdruseas02.intranet.hdr:HDR_US_East_02/Documents/WV_DOT/WVDOT-Eugene_Carter_Bridge_3/6.0_CAD_BIM/6.2_WIP/HDR/6.2.2_Sheet_Files/23_Structure/4.018 Span 6 EB Typical Section Gore

PROJECT NUMBERS		DISTRICT	COUNTY	SHEET NO.	TOTAL
STATE	FEDERAL				
S320-64-57.44 00	NHPP-0064 (497)D	1	KANAWHA		

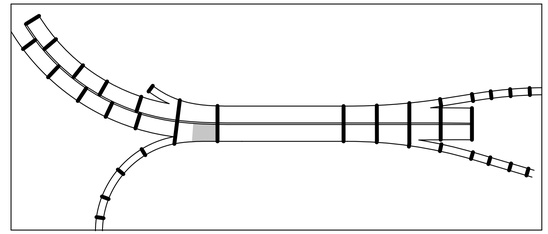

KEY PLAN

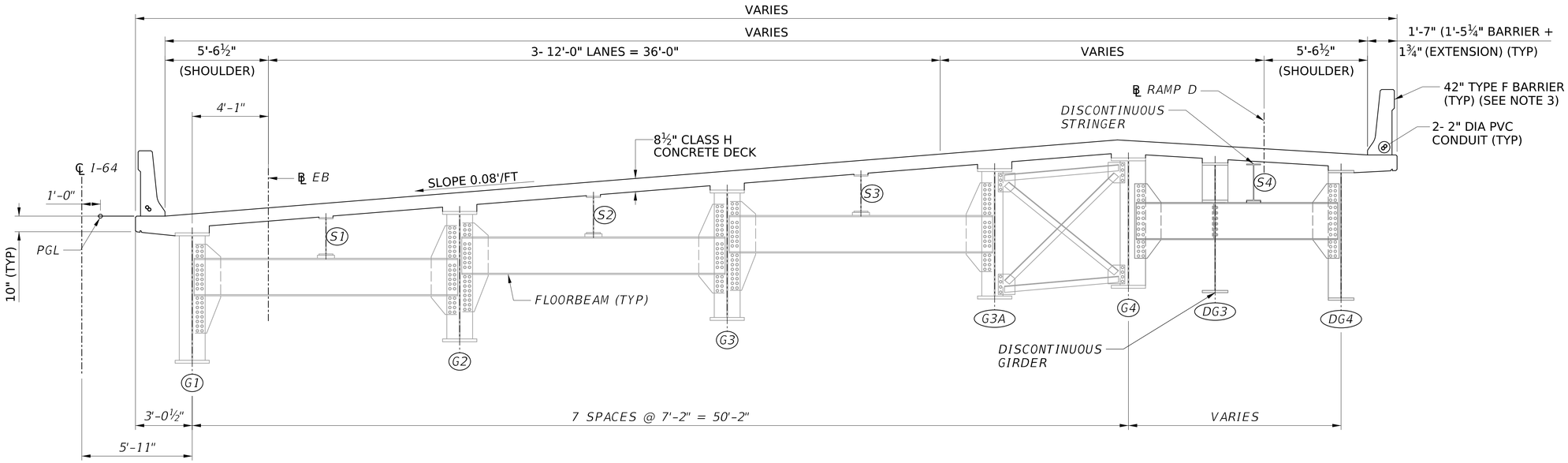

DECK SECTION F-F

NOTES:

1. FOR GENERAL NOTES, SEE SHEETS AND .
2. FOR DECK PLACEMENT NOTES, SEE SHEET .

NOT TO SCALE

NO.	REVISION	DATE	BY

WEST VIRGINIA DEPARTMENT OF TRANSPORTATION
DIVISION OF HIGHWAYS
ENGINEERING DIVISION

I-64 OVER KANAWHA RIVER
EUGENE A. CARTER MEMORIAL BRIDGE +3

DECK SECTION (EB) SPAN 5, SPAN 6 AND SPAN DA (4 OF 4)

DESIGNED	DATE
KCO	08/25
DRAWN	
SCN	08/25
CHECKED	
REVIEWED	

HDR ENGINEERING INC.
CONSULTING ENGINEERS
CHARLESTON, WV
681-341-6100

SHEET $TYP06$ OF

BRIDGE NO. 2563.6

SNOLEIN $DD-MMM-YYYY HH:MM$ pw://pwhdruseas02.intranet.hdr:HDR_US_East_02/Documents/WV_DOT/WVDOT-Eugene_Carter_Bridge_3/6.0_CAD_BIM/6.2_WIP/HDR/6.2.2_Sheet_Files/23_Structure/4.019 Span 6 EB Typical Section EB

PROJECT NUMBERS		DISTRICT	COUNTY	SHEET NO.	TOTAL
STATE	FEDERAL				
S320-64-57.44 00	NHPP-0064 (497)D	1	KANAWHA		

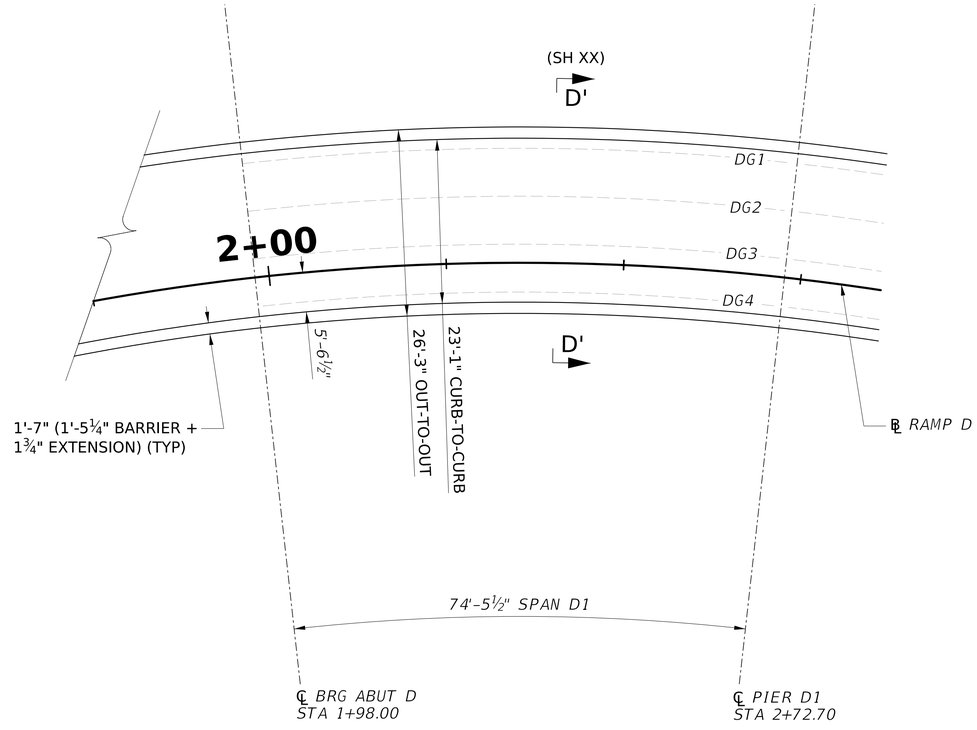

DECK PLACEMENT PLAN (EB)

(RAMP D)

SCALE : 2 0 4 8 12 ft.

3/32" = 1'-0"

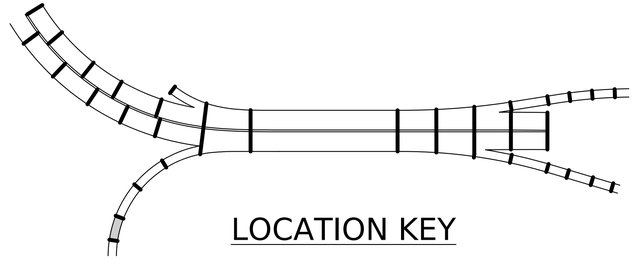

LOCATION KEY

MIN LAP LENGTHS

DECK BAR LAPS
#4 = 1'-7"
#5 = 2'-0"
#6 = 2'-5"

BARRIER BAR LAPS
#5 = 2'-7"
#7 = 3'-7"
#8 = 4'-1"

NOTES:

1. FOR GENERAL NOTES, SEE SHEETS THRU .
2. FOR DECK PLACEMENT NOTES, SEE SHEET .

NO.	REVISION	DATE	BY

WEST VIRGINIA DEPARTMENT OF TRANSPORTATION
DIVISION OF HIGHWAYS
ENGINEERING DIVISION

I-64 OVER KANAWHA RIVER
EUGENE A. CARTER MEMORIAL BRIDGE +3
DECK PLACEMENT (RAMP D)
SPAN D1

DESIGNED	DATE
KCO	10/25
DRAWN	
SCN	10/25
CHECKED	
REVIEWED	

HDR ENGINEERING INC.
CONSULTING ENGINEERS
CHARLESTON, WV
681-341-6100

SHEET OF

BRIDGE NO. 2563.6

SNOLEN $DD-MMM-YYYY HH:MM$ pw://pwhdruseas02.intranet.hdr:HDR_US_East_02/Documents/WV_DOT/WVDOT-Eugene_Carter_Bridge_3/6.0_CAD_BIM/6.2_WIP/HDR/6.2.2_Sheet_Files/23_Structure/4.020a Ramp D Deck Plan_01_EB

PROJECT NUMBERS		DISTRICT	COUNTY	SHEET NO.	TOTAL
STATE	FEDERAL				
S320-64-57.44 00	NHPP-0064 (497)D	1	KANAWHA		

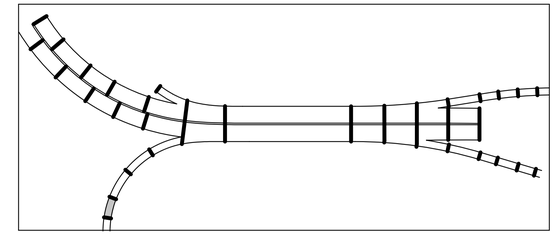

KEY PLAN

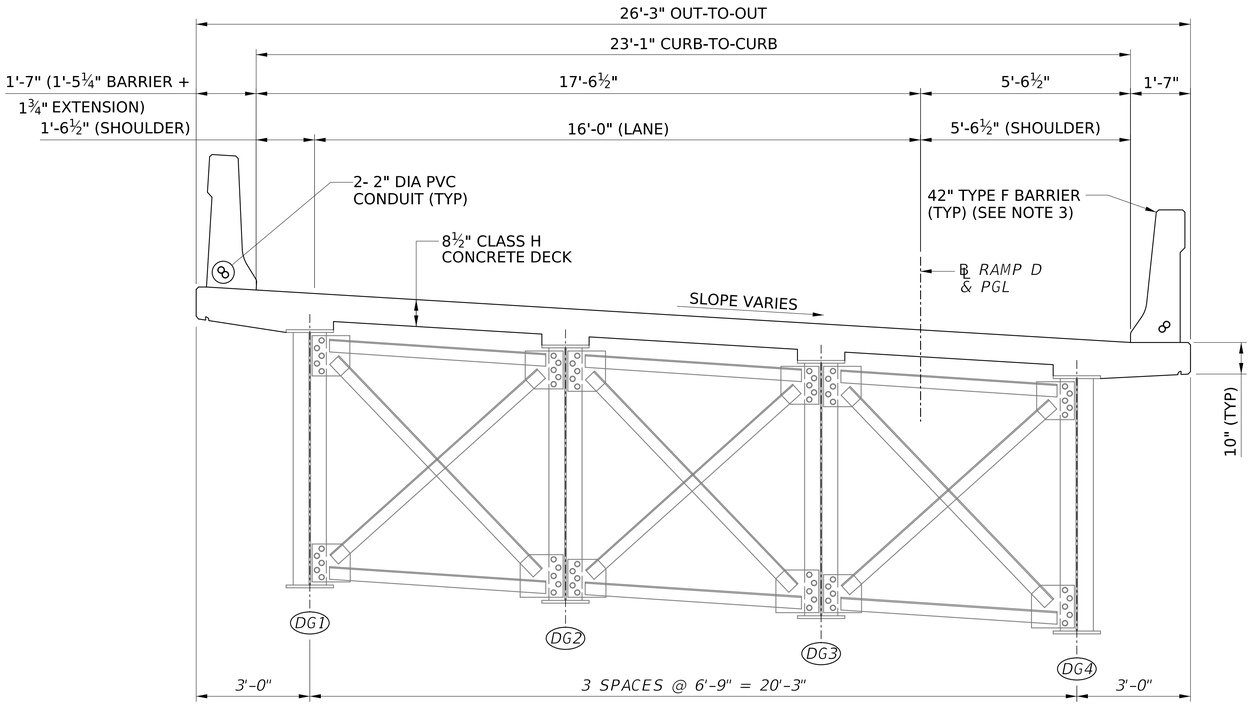

DECK SECTION D'-D'

NOTES:

1. FOR GENERAL NOTES, SEE SHEETS AND .
2. FOR DECK PLACEMENT NOTES, SEE SHEET .

SCALE : 1 0 1 2 ft.
½" = 1'-0"

NO.	REVISION	DATE	BY

WEST VIRGINIA DEPARTMENT OF TRANSPORTATION
DIVISION OF HIGHWAYS
ENGINEERING DIVISION

I-64 OVER KANAWHA RIVER
EUGENE A. CARTER MEMORIAL BRIDGE +3

DECK SECTION (RAMP D)
SPAN D1

DESIGNED	DATE
KCO	08/25
DRAWN	
SCN	08/25
CHECKED	
REVIEWED	

HDR ENGINEERING INC.
CONSULTING ENGINEERS
CHARLESTON, WV
681-341-6100

SHEET OF
BRIDGE NO. 2563.6

SNOLEN $DD-MMM-YYYY HH:MM$ pw://pwhdrusess02.intranet.hdr:HDR_US_East_02/Documents/WV_DOT/WVDOT-Eugene_Carter_Bridge_3/6.0_CAD_BIM/6.2_WIP/HDR/6.2.2_Sheet_Files/23_Structure/4.020b Typical Section Ramp D

PROJECT NUMBERS		DISTRICT	COUNTY	SHEET NO.	TOTAL
STATE	FEDERAL				
S320-64-57.44 00	NHPP-0064 (497)D	1	KANAWHA		

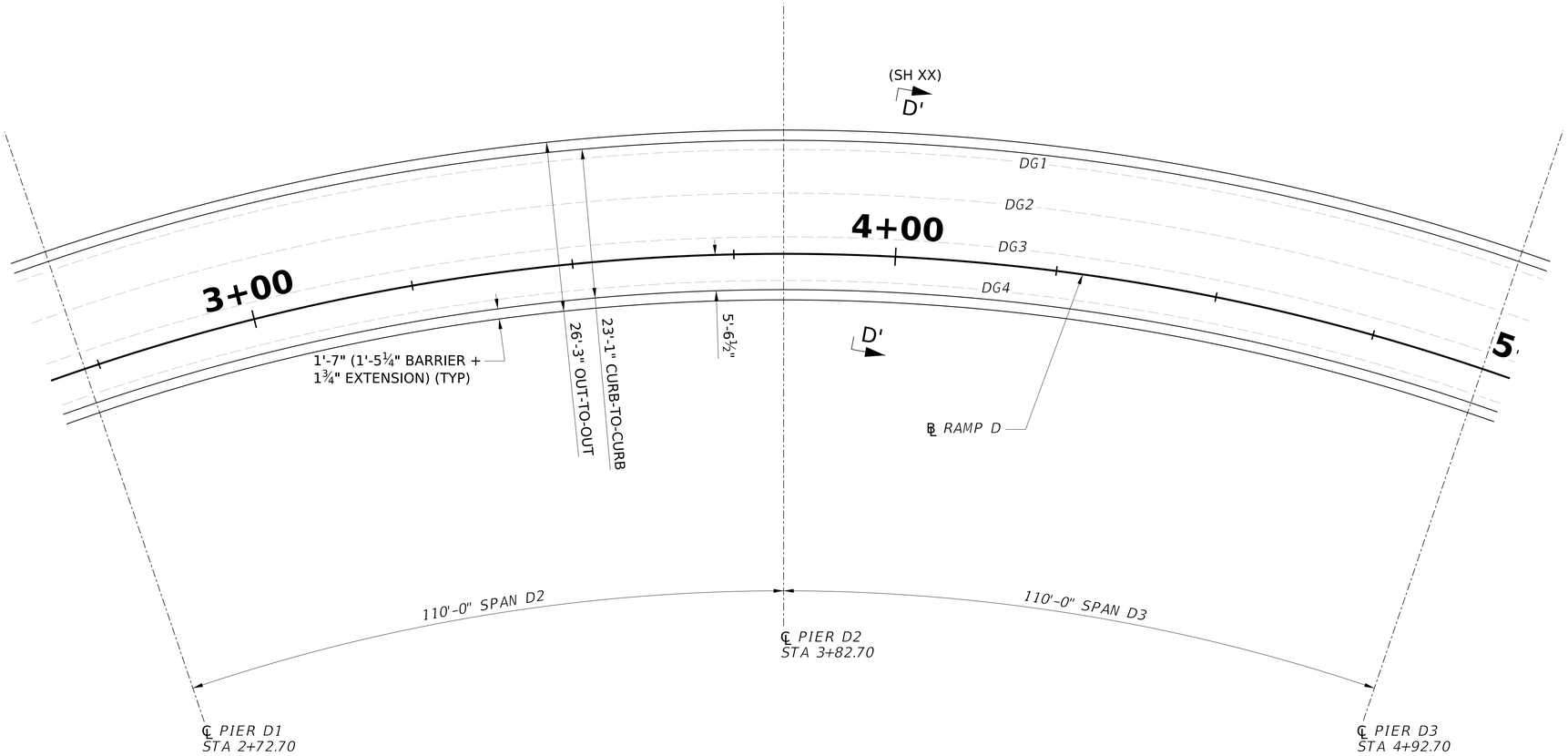

DECK PLACEMENT PLAN (EB)

(RAMP D)

SCALE : 2 0 4 8 12 ft.

3/32" = 1'-0"

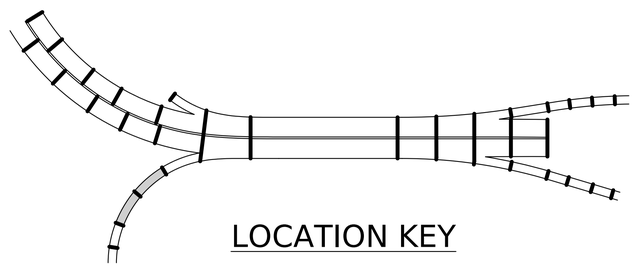

LOCATION KEY

MIN LAP LENGTHS

DECK BAR LAPS
#4 = 1'-7"
#5 = 2'-0"
#6 = 2'-5"

BARRIER BAR LAPS
#5 = 2'-7"
#7 = 3'-7"
#8 = 4'-1"

NOTES:

1. FOR GENERAL NOTES, SEE SHEETS THRU .
2. FOR DECK PLACEMENT NOTES, SEE SHEET .

NO.	REVISION	DATE	BY

WEST VIRGINIA DEPARTMENT OF TRANSPORTATION
DIVISION OF HIGHWAYS
ENGINEERING DIVISION

I-64 OVER KANAWHA RIVER
EUGENE A. CARTER MEMORIAL BRIDGE +3
DECK PLACEMENT PLAN (RAMP D)
SPAN D2 AND SPAN D3

DESIGNED	KCO	10/25
DRAWN	SCN	10/25
CHECKED		
REVIEWED		

HDR ENGINEERING INC.
CONSULTING ENGINEERS
CHARLESTON, WV
681-341-6100

SHEET OF

BRIDGE NO. 2563.6

SNOLEN $DD-MMM-YYYY HH:MM$ pw://pwhdruseas02.intranet.hdr:HDR_US_East_02/Documents/WV_DOT/WVDOT-Eugene_Carter_Bridge_3/6.0_CAD_BIM/6.2_WIP/HDR/6.2.2_Sheet_Files/23_Structure/4.020c Ramp D Deck Plan_02_EB

PROJECT NUMBERS		DISTRICT	COUNTY	SHEET NO.	TOTAL
STATE	FEDERAL				
S320-64-57.44 00	NHPP-0064 (497)D	1	KANAWHA		

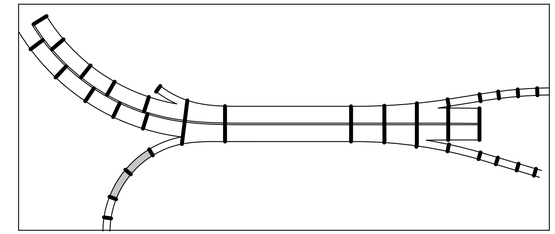

KEY PLAN

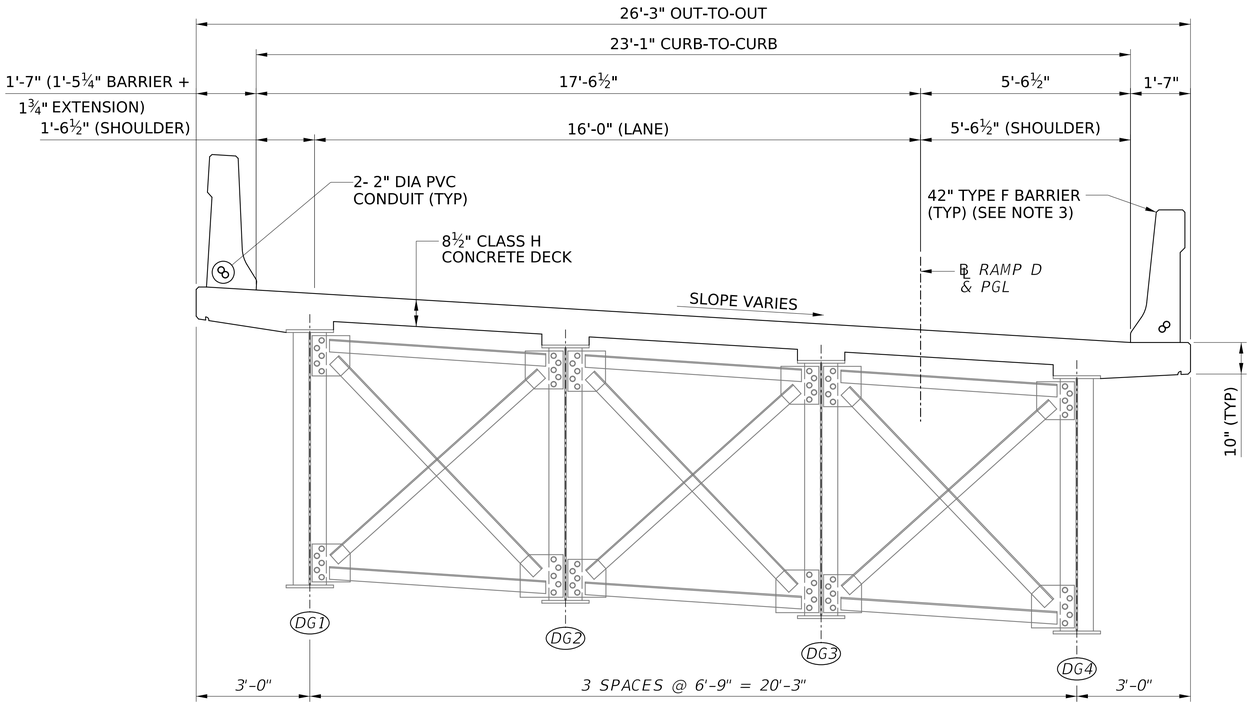

DECK SECTION D'-D'

NOTES:

1. FOR GENERAL NOTES, SEE SHEETS AND .
2. FOR DECK PLACEMENT NOTES, SEE SHEET .

SCALE : 1 0 1 2 ft.
½" = 1'-0"

NO.	REVISION	DATE	BY

WEST VIRGINIA DEPARTMENT OF TRANSPORTATION
DIVISION OF HIGHWAYS
ENGINEERING DIVISION

I-64 OVER KANAWHA RIVER
EUGENE A. CARTER MEMORIAL BRIDGE +3

DECK SECTION (RAMP D)
SPAN D2 AND SPAN SPAN 3

DESIGNED	DATE
KCO	08/25
DRAWN	
SCN	08/25
CHECKED	
REVIEWED	

HDR ENGINEERING INC.
CONSULTING ENGINEERS
CHARLESTON, WV
681-341-6100

SHEET OF

BRIDGE NO. 2563.6

SNOLEN $DD-MMM-YYYY HH:MM$ pw://pwhdrusess02.intranet.hdr:HDR_US_East_02/Documents/WV_DOT/WVDOT-Eugene_Carter_Bridge_3/6.0_CAD_BIM/6.2_WIP/HDR/6.2.2_Sheet_Files/23_Structure/4.020c Typical Section Ramp D

PROJECT NUMBERS		DISTRICT	COUNTY	SHEET NO.	TOTAL
STATE	FEDERAL				
S320-64-57.44 00	NHPP-0064 (497)D	1	KANAWHA		

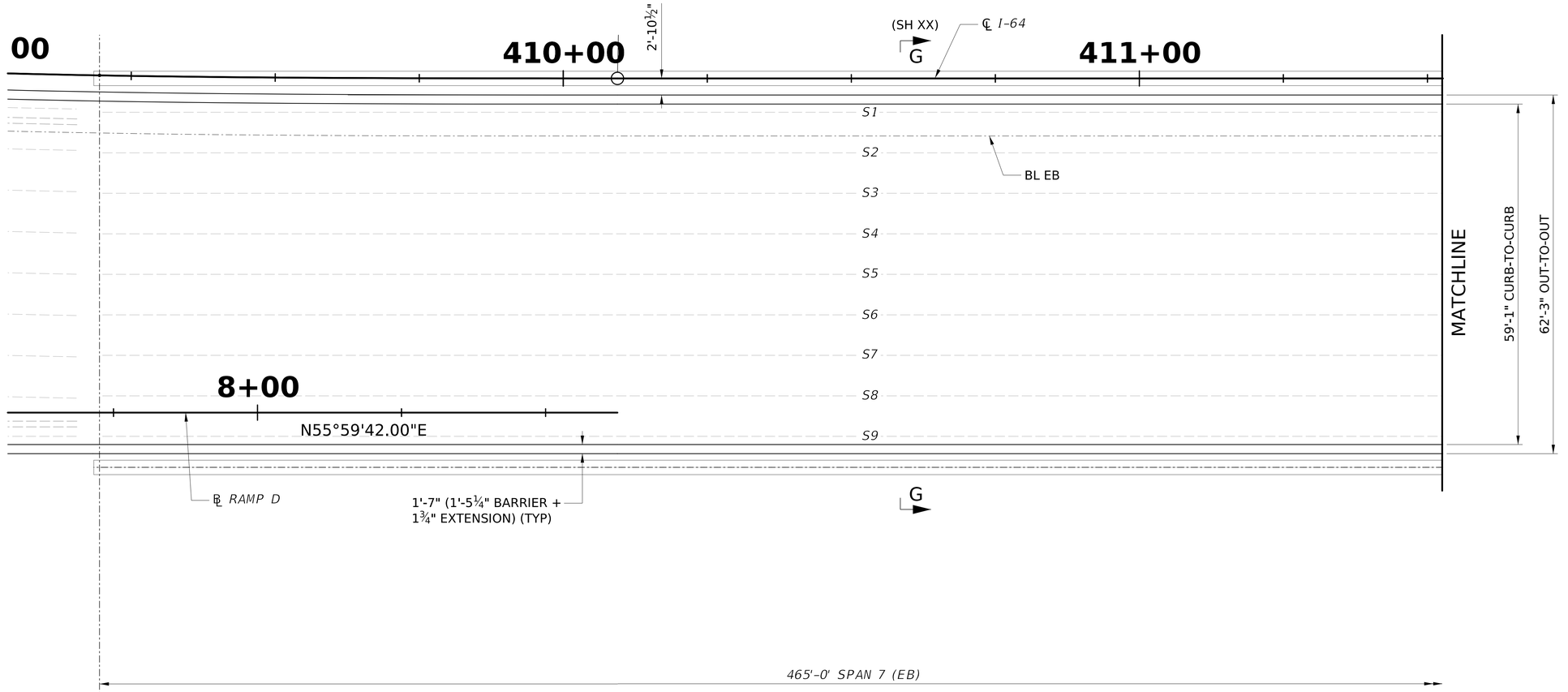

DECK PLACEMENT PLAN (EB)

(SPAN 7)

SCALE : 2 0 4 8 12 ft.

3/32" = 1'-0"

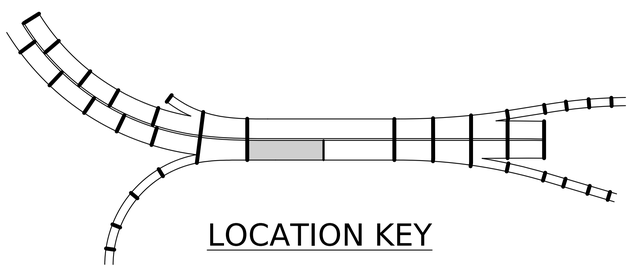

LOCATION KEY

MIN LAP LENGTHS

DECK BAR LAPS
#4 = 1'-7"
#5 = 2'-0"
#6 = 2'-5"

BARRIER BAR LAPS
#5 = 2'-7"
#7 = 3'-7"
#8 = 4'-1"

NOTES:

1. FOR GENERAL NOTES, SEE SHEETS THRU .
2. FOR DECK PLACEMENT NOTES, SEE SHEET .

NO.	REVISION	DATE	BY

WEST VIRGINIA DEPARTMENT OF TRANSPORTATION
DIVISION OF HIGHWAYS
ENGINEERING DIVISION

I-64 OVER KANAWHA RIVER
EUGENE A. CARTER MEMORIAL BRIDGE +3

DECK PLACEMENT PLAN (EB)
SPAN 7 (1 OF 2)

DESIGNED	DATE
KCO	10/25
DRAWN	
SCN	10/25
CHECKED	
REVIEWED	

HDR ENGINEERING INC.
CONSULTING ENGINEERS
CHARLESTON, WV
681-341-6100

SHEET OF

BRIDGE NO. 2563.6

SNOLEN $DD-MMM-YYYY HH:MM$ pw://pwhdruseas02.intranet.hdr:HDR_US_East_02/Documents/WV_DOT/WVDOT-Eugene_Carter_Bridge_3/6.0_CAD_BIM/6.2_WIP/HDR/6.2.2_Sheet_Files/23_Structure/4.025 Deck Plan Spans 7-01 EB

PROJECT NUMBERS		DISTRICT	COUNTY	SHEET NO.	TOTAL
STATE	FEDERAL				
S320-64-57.44 00	NHPP-0064 (497)D	1	KANAWHA		

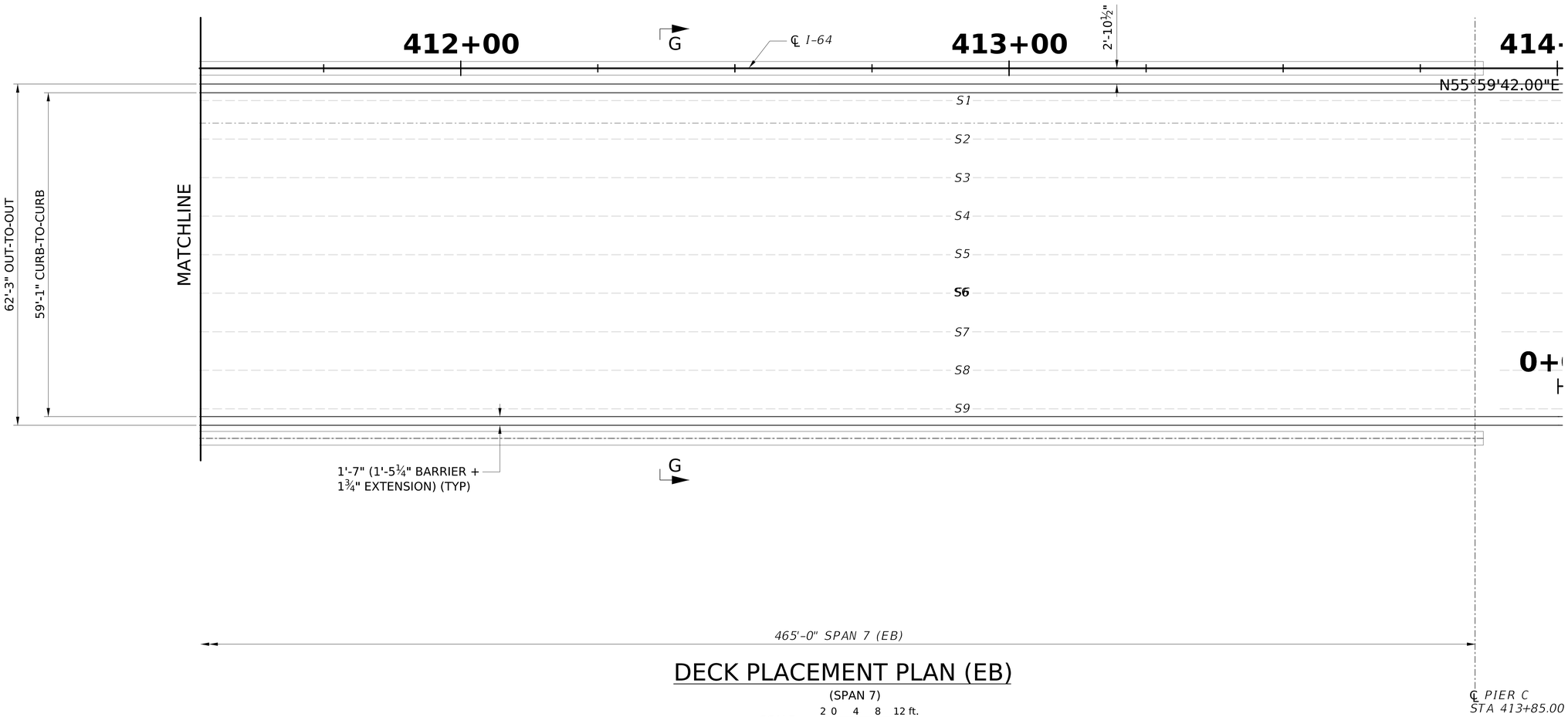

DECK PLACEMENT PLAN (EB)

(SPAN 7)

SCALE : 2 0 4 8 12 ft.

3/32" = 1'-0"

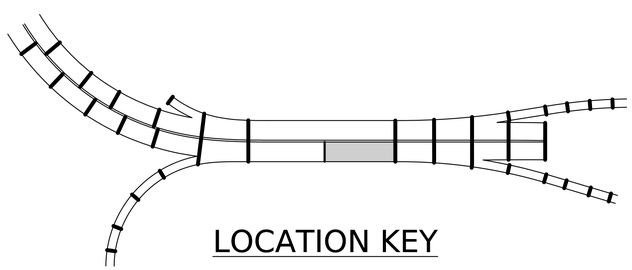

LOCATION KEY

MIN LAP LENGTHS

DECK BAR LAPS
#4 = 1'-7"
#5 = 2'-0"
#6 = 2'-5"

BARRIER BAR LAPS
#5 = 2'-7"
#7 = 3'-7"
#8 = 4'-1"

NOTES:

1. FOR GENERAL NOTES, SEE SHEETS THRU .
2. FOR DECK PLACEMENT NOTES, SEE SHEET .

NO.	REVISION	DATE	BY

WEST VIRGINIA DEPARTMENT OF TRANSPORTATION
DIVISION OF HIGHWAYS
ENGINEERING DIVISION

I-64 OVER KANAWHA RIVER
EUGENE A. CARTER MEMORIAL BRIDGE +3

DECK PLACEMENT PLAN (EB)
SPAN 7 (2 OF 2)

DESIGNED	DATE
KCO	10/25
DRAWN	
SCN	10/25
CHECKED	
REVIEWED	

HDR ENGINEERING INC.
CONSULTING ENGINEERS
CHARLESTON, WV
681-341-6100

SHEET OF

BRIDGE NO. 2563.6

SNOLEN $DD-MMM-YYYY HH:MM$ pw://pwhdruseas02.intranet.hdr:HDR_US_East_02/Documents/WV_DOT/WVDOT-Eugene_Carter_Bridge_3/6.0_CAD_BIM/6.2_WIP/HDR/6.2.2_Sheet_Files/23_Structure/4.026 Deck Plan Spans 7-02 EB

PROJECT NUMBERS		DISTRICT	COUNTY	SHEET NO.	TOTAL
STATE	FEDERAL				
S320-64-57.44 00	NHPP-0064 (497)D	1	KANAWHA		

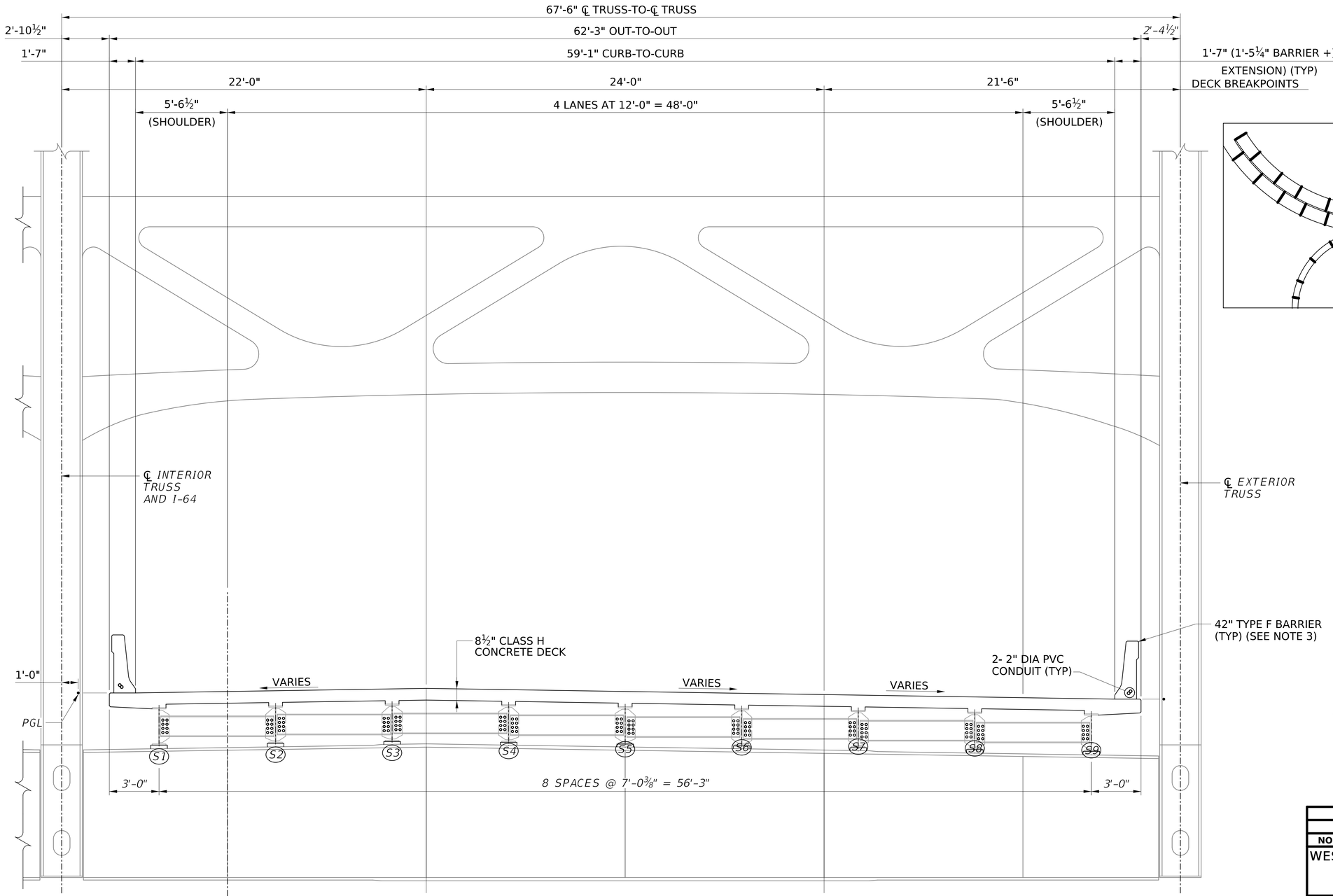

DECK SECTION G-G

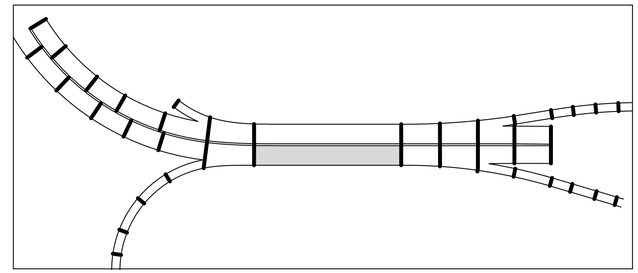

KEY PLAN

NOTES:

1. FOR GENERAL NOTES, SEE SHEETS AND .
2. FOR DECK PLACEMENT NOTES, SEE SHEET .

NOT TO SCALE

NO.	REVISION	DATE	BY

WEST VIRGINIA DEPARTMENT OF TRANSPORTATION
DIVISION OF HIGHWAYS
ENGINEERING DIVISION

I-64 OVER KANAWHA RIVER
EUGENE A. CARTER MEMORIAL BRIDGE +3
DECK SECTION (EB)
SPAN 7

DESIGNED	KCO	DATE	08/25
DRAWN	SCN		08/25
CHECKED			
REVIEWED			

HDR ENGINEERING INC.
CONSULTING ENGINEERS
CHARLESTON, WV
681-341-6100

SHEET OF

BRIDGE NO. 2563.6

SNOLEN $DD-MMM-YYYY HH:MM$ pw://pwhdruseas02.intranet.hdr:HDR_US_East_02/Documents/WV_DOT/WVDOT-Eugene_Carter_Bridge_3/6.0_CAD_BIM/6.2_WIP/HDR/6.2.2_Sheet_Files/23_Structure/4.027 Main Typical Section Span 7 EB

PROJECT NUMBERS		DISTRICT	COUNTY	SHEET NO.	TOTAL
STATE	FEDERAL				
S320-64-57.44 00	NHPP-0064 (497)D	1	KANAWHA		

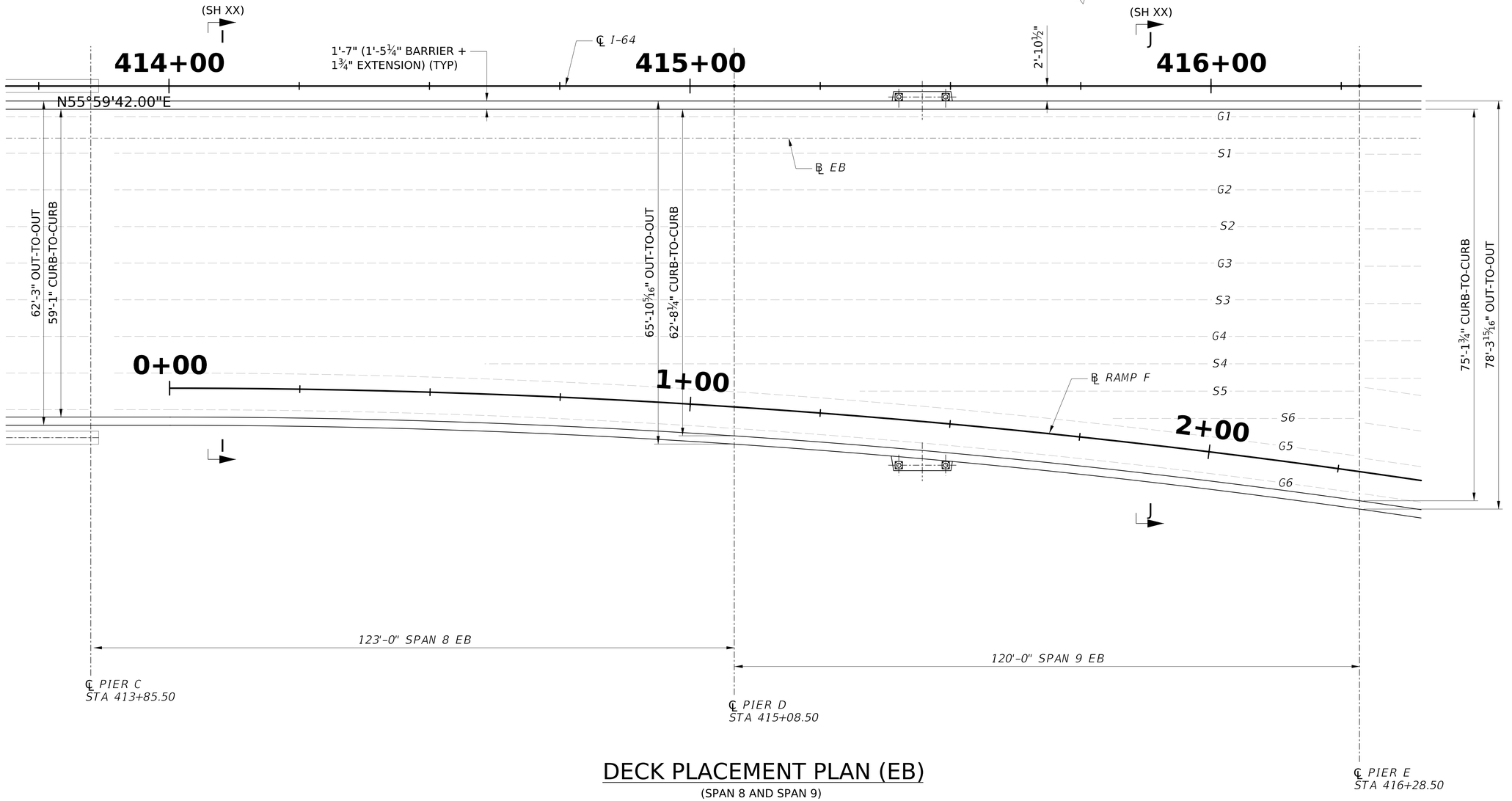

DECK PLACEMENT PLAN (EB)

(SPAN 8 AND SPAN 9)

SCALE : 2 0 4 8 12 ft.

$\frac{3}{32}$" = 1'-0"

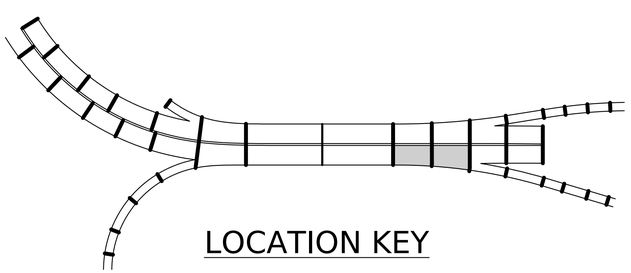

LOCATION KEY

NOTES:

1. FOR GENERAL NOTES, SEE SHEETS THRU .
2. FOR DECK PLACEMENT NOTES, SEE SHEET .

NO.	REVISION	DATE	BY

WEST VIRGINIA DEPARTMENT OF TRANSPORTATION
DIVISION OF HIGHWAYS
ENGINEERING DIVISION

I-64 OVER KANAWHA RIVER
EUGENE A. CARTER MEMORIAL BRIDGE +3

DECK PLACEMENT PLAN (EB)
SPAN 8 AND SPAN 9

DESIGNED	DATE
KCO	10/25
DRAWN	
SCN	10/25
CHECKED	
REVIEWED	

HDR ENGINEERING INC.
CONSULTING ENGINEERS
CHARLESTON, WV
681-341-6100

SHEET OF

BRIDGE NO. 2563.6

SNOLEN $DD-MMM-YYYY HH:MM$ pw://pwhdruseas02.intranet.hdr:HDR_US_East_02/Documents/WV_DOT/WVDOT-Eugene_Carter_Bridge_3/6.0_CAD_BIM/6.2_WIP/HDR/6.2.2_Sheet_Files/23_Structure/4.029 Deck Plan Spans 8-9 EB

PROJECT NUMBERS		DISTRICT	COUNTY	SHEET NO.	TOTAL
STATE	FEDERAL				
S320-64-57.44 00	NHPP-0064 (497)D	1	KANAWHA		

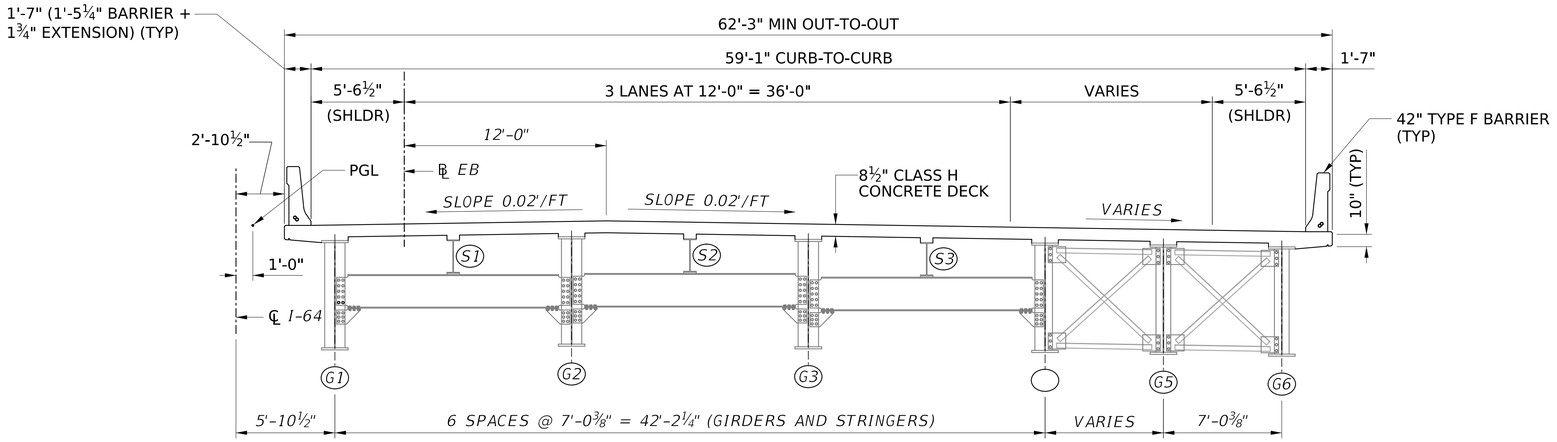

DECK SECTION I-I

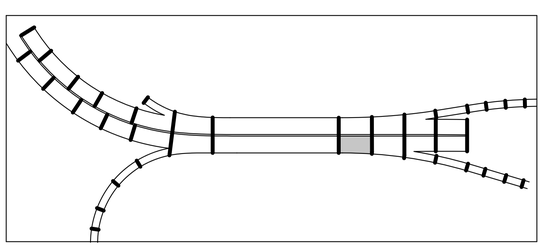

KEY PLAN

NOTES:

1. FOR GENERAL NOTES, SEE SHEETS AND .
2. FOR DECK PLACEMENT NOTES, SEE SHEET .

NOT TO SCALE

NO.	REVISION	DATE	BY

WEST VIRGINIA DEPARTMENT OF TRANSPORTATION
DIVISION OF HIGHWAYS
ENGINEERING DIVISION

I-64 OVER KANAWHA RIVER
EUGENE A. CARTER MEMORIAL BRIDGE +3

DECK SECTION (EB)
SPAN 8 AND SPAN 9 (1 OF 2)

DESIGNED	DATE
KCO	08/25
DRAWN	
SCN	08/25
CHECKED	
REVIEWED	

HDR ENGINEERING INC.
CONSULTING ENGINEERS
CHARLESTON, WV
681-341-6100

SHEET OF

BRIDGE NO. 2563.6

SNOLEN $DD-MMM-YYYY HH:MM$ pw://pwhdruseas02.intranet.hdr:HDR_US_East_02/Documents/WV_DOT/WVDOT-Eugene_Carter_Bridge_3/6.0_CAD_BIM/6.2_WIP/HDR/6.2.2_Sheet_Files/23_Structure/4.030 Span 8 Typical Section EB

PROJECT NUMBERS		DISTRICT	COUNTY	SHEET NO.	TOTAL
STATE	FEDERAL				
S320-64-57.44 00	NHPP-0064 (497)D	1	KANAWHA		

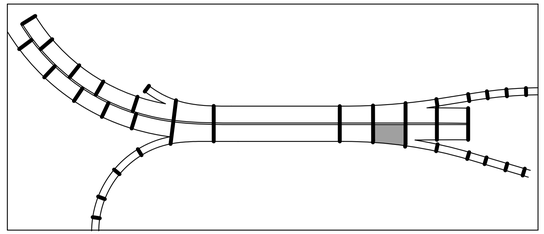

KEY PLAN

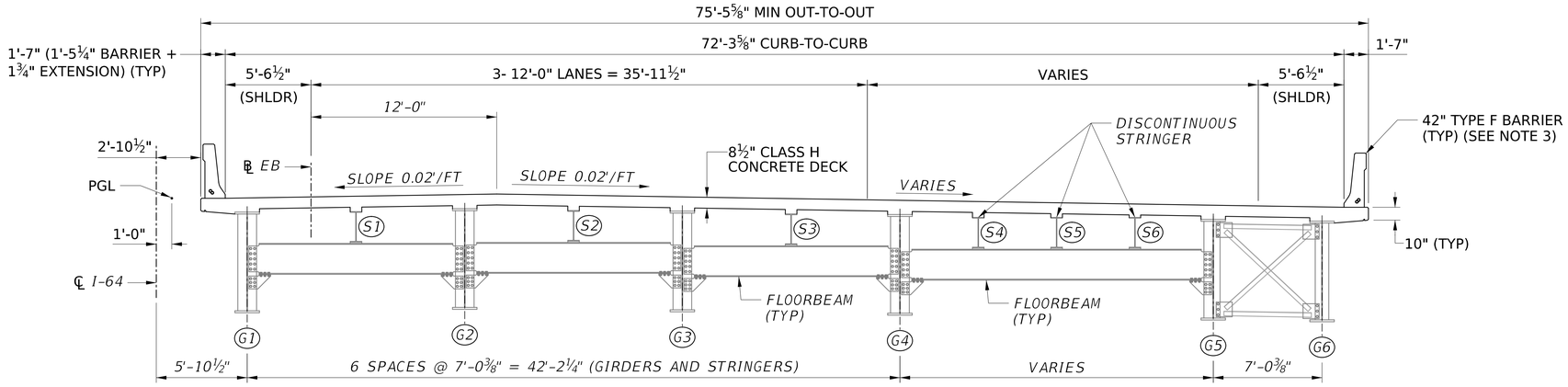

DECK SECTION J-J

NOTES:

1. FOR GENERAL NOTES, SEE SHEETS AND .
2. FOR DECK PLACEMENT NOTES, SEE SHEET .

NOT TO SCALE

NO.	REVISION	DATE	BY

WEST VIRGINIA DEPARTMENT OF TRANSPORTATION
DIVISION OF HIGHWAYS
ENGINEERING DIVISION

I-64 OVER KANAWHA RIVER
EUGENE A. CARTER MEMORIAL BRIDGE +3

DECK SECTION (EB)
SPAN 8 AND SPAN 9 (2 OF 2)

DESIGNED	DATE
KCO	08/25
DRAWN	
SCN	08/25
CHECKED	
REVIEWED	

HDR ENGINEERING INC.
CONSULTING ENGINEERS
CHARLESTON, WV
681-341-6100

SHEET OF

BRIDGE NO. 2563.6

SNOLEN $DD-MMM-YYYY HH:MM$ pw://pwhdruseas02.intranet.hdr:HDR_US_East_02/Documents/WV_DOT/WVDOT-Eugene_Carter_Bridge_3/6.0_CAD_BIM/6.2_WIP/HDR/6.2.2_Sheet_Files/23_Structure/4.031 Span 9 Typical Section EB

PROJECT NUMBERS		DISTRICT	COUNTY	SHEET NO.	TOTAL
STATE	FEDERAL				
S320-64-57.44 00	NHPP-0064 (497)D	1	KANAWHA		

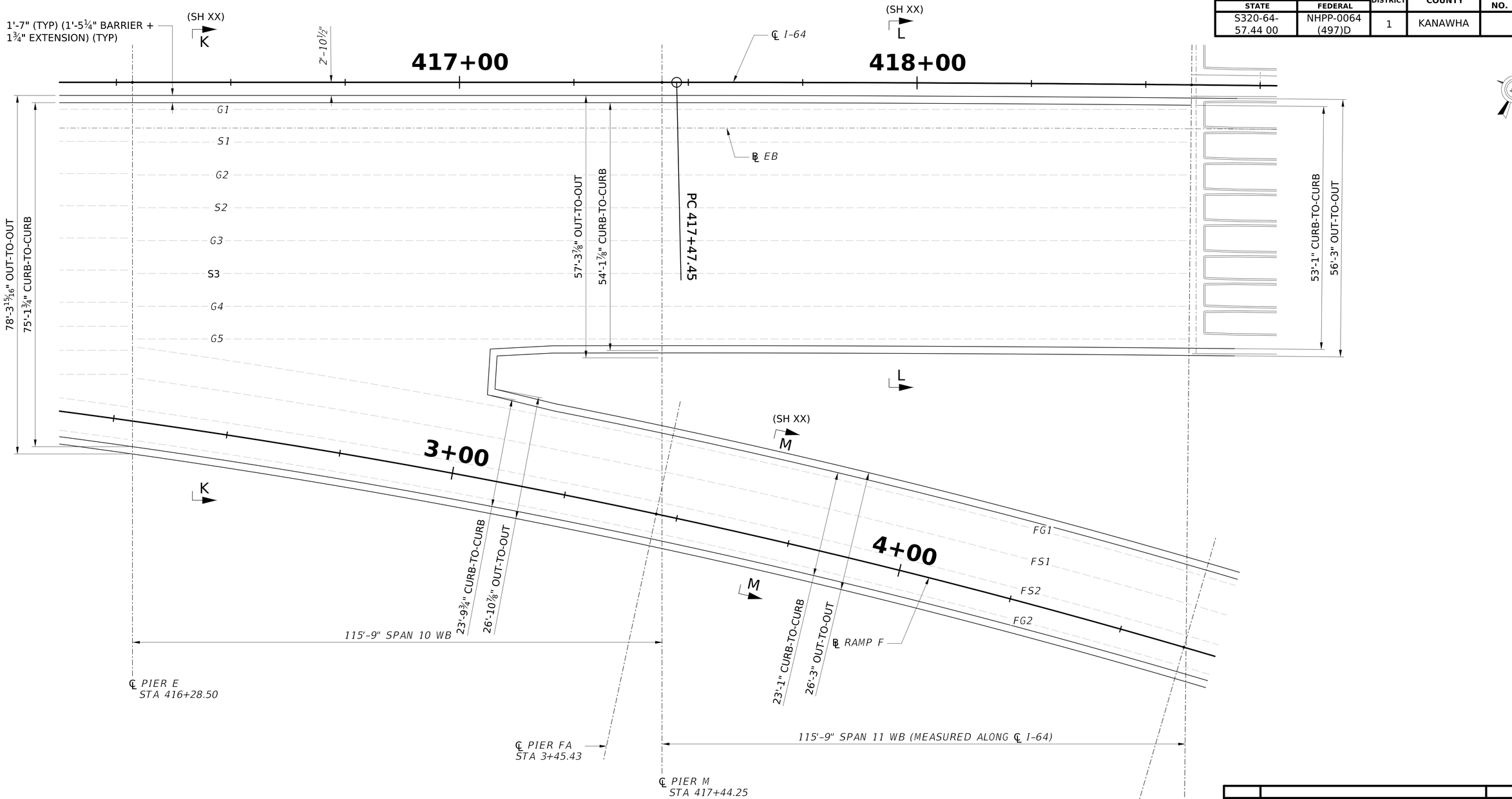

DECK PLACEMENT PLAN (EB)

(SPAN 10 AND SPAN 11)

SCALE : 2 0 4 8 12 ft.

3/32" = 1'-0"

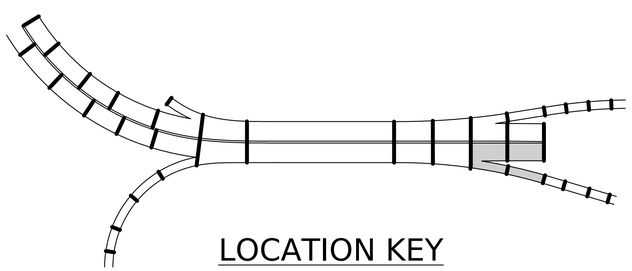

LOCATION KEY

NOTES:

1. FOR GENERAL NOTES, SEE SHEETS THRU .
2. FOR DECK PLACEMENT NOTES, SEE SHEET .

NO.	REVISION	DATE	BY

WEST VIRGINIA DEPARTMENT OF TRANSPORTATION
DIVISION OF HIGHWAYS
ENGINEERING DIVISION

I-64 OVER KANAWHA RIVER
EUGENE A. CARTER MEMORIAL BRIDGE +3

DECK PLACEMENT PLAN (EB)
SPAN 10 AND SPAN 11

DESIGNED	DATE
KCO	10/25
DRAWN	
SCN	10/25
CHECKED	
REVIEWED	

HDR ENGINEERING INC.
CONSULTING ENGINEERS
CHARLESTON, WV
681-341-6100

SHEET OF

BRIDGE NO. 2563.6

SNOLEN $DD-MMM-YYYY HH:MM$ pw://pwhdruseas02.intranet.hdr:HDR_US_East_02/Documents/WV_DOT/WVDOT-Eugene_Carter_Bridge_3/6.0_CAD_BIM/6.2_WIP/HDR/6.2.2_Sheet_Files/23_Structure/4.032 Deck Plan Spans 10-11 EB

PROJECT NUMBERS		DISTRICT	COUNTY	SHEET NO.	TOTAL
STATE	FEDERAL				
S320-64-57.44 00	NHPP-0064 (497)D	1	KANAWHA		

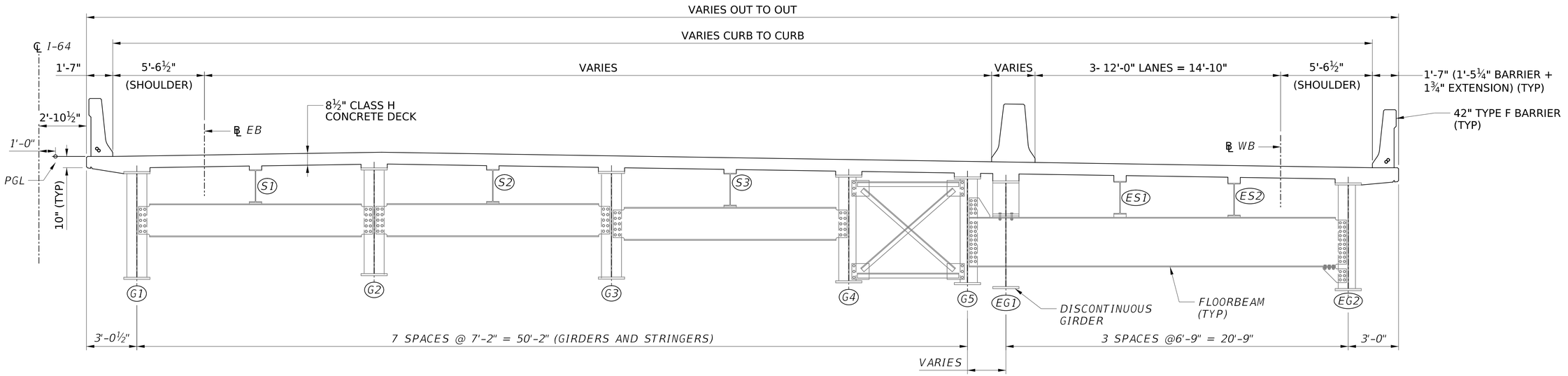

DECK SECTION K-K

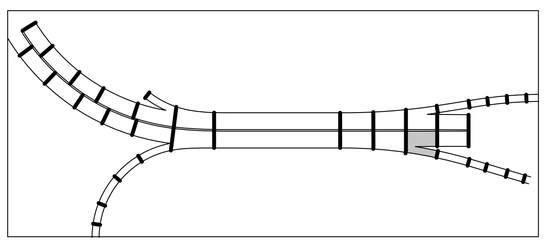

KEY PLAN

NOTES:

1. FOR GENERAL NOTES, SEE SHEETS AND .
2. FOR DECK PLACEMENT NOTES, SEE SHEET .

NO.	REVISION	DATE	BY

WEST VIRGINIA DEPARTMENT OF TRANSPORTATION
DIVISION OF HIGHWAYS
ENGINEERING DIVISION

I-64 OVER KANAWHA RIVER
EUGENE A. CARTER MEMORIAL BRIDGE +3
DECK SECTION (EB)
SPAN 10 AND SPAN 11 (1 OF 3)

DESIGNED	DATE
KCO	08/25
DRAWN	
SCN	08/25
CHECKED	
REVIEWED	

HDR ENGINEERING INC.
CONSULTING ENGINEERS
CHARLESTON, WV
681-341-6100

SHEET OF
BRIDGE NO. 2563.6

SNOLEN $DD-MMM-YYYY HH:MM$ pw://pwhdruseas02.intranet.hdr:HDR_US_East_02/Documents/WV_DOT/WVDOT-Eugene_Carter_Bridge_3/6.0_CAD_BIM/6.2_WIP/HDR/6.2.2_Sheet_Files/23_Structure/4.033 Span 10 Typical Section EB

PROJECT NUMBERS		DISTRICT	COUNTY	SHEET NO.	TOTAL
STATE	FEDERAL				
S320-64-57.44 00	NHPP-0064 (497)D	1	KANAWHA		

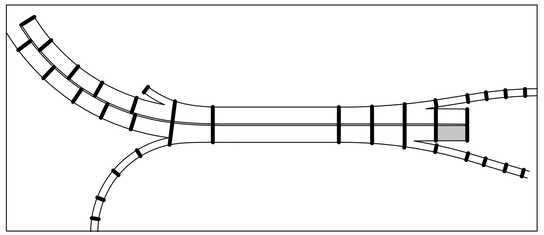

KEY PLAN

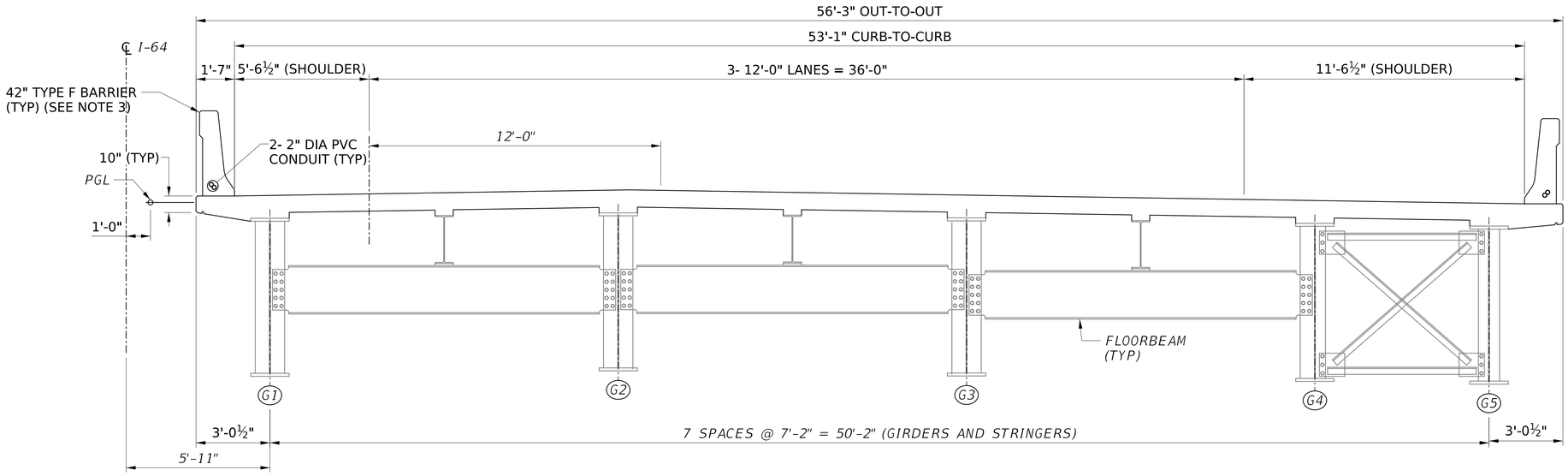

DECK SECTION L-L

NOTES:

1. FOR GENERAL NOTES, SEE SHEETS AND .
2. FOR DECK PLACEMENT NOTES, SEE SHEET .

NO.	REVISION	DATE	BY

WEST VIRGINIA DEPARTMENT OF TRANSPORTATION
DIVISION OF HIGHWAYS
ENGINEERING DIVISION

I-64 OVER KANAWHA RIVER
EUGENE A. CARTER MEMORIAL BRIDGE +3

DECK SECTION (EB)
SPAN 10 AND SPAN 11 (2 OF 3)

DESIGNED	KCO	DATE	08/25
DRAWN	SCN		08/25
CHECKED			
REVIEWED			

SCALE : 1 0 1 2 3 ft.
⅜" = 1'-0"

HDR ENGINEERING INC.
CONSULTING ENGINEERS
CHARLESTON, WV
681-341-6100

SHEET OF

BRIDGE NO. 2563.6

SNOLEN $DD-MMM-YYYY HH:MM$ pw://pwhdruseas02.intranet.hdr:HDR_US_East_02/Documents/WV_DOT/WVDOT-Eugene_Carter_Bridge_3/6.0_CAD_BIM/6.2_WIP/HDR/6.2.2_Sheet_Files/23_Structure/4.034 Span 11 Typical Section EB

PROJECT NUMBERS		DISTRICT	COUNTY	SHEET NO.	TOTAL
STATE	FEDERAL				
S320-64-57.44 00	NHPP-0064 (497)D	1	KANAWHA		

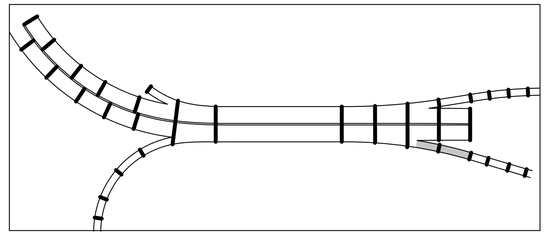

KEY PLAN

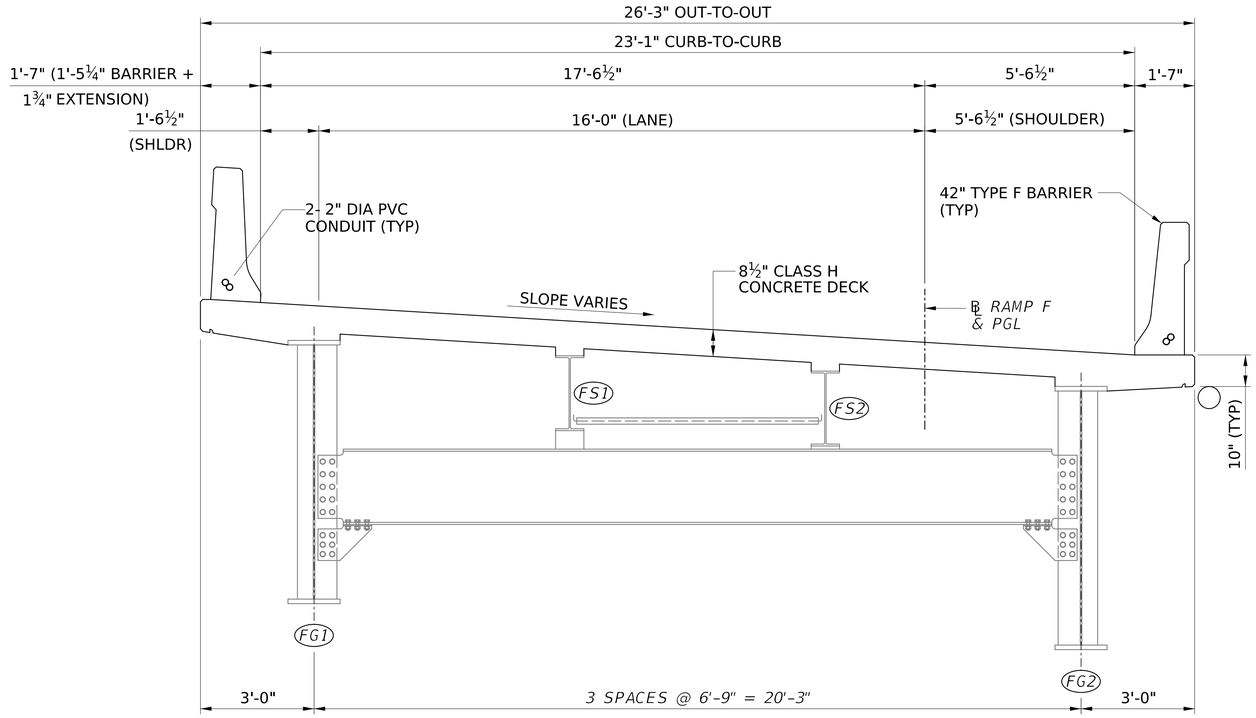

DECK SECTION M-M

NOTES:

1. FOR GENERAL NOTES, SEE SHEETS AND .
2. FOR DECK PLACEMENT NOTES, SEE SHEET .

SCALE : 1 0 1 2 ft.
½" = 1'-0"

NO.	REVISION	DATE	BY

WEST VIRGINIA DEPARTMENT OF TRANSPORTATION
DIVISION OF HIGHWAYS
ENGINEERING DIVISION

I-64 OVER KANAWHA RIVER
EUGENE A. CARTER MEMORIAL BRIDGE +3
DECK SECTION (EB)
SPAN 10 AND SPAN 11 (3 OF 3)

DESIGNED	DATE
KCO	08/25
DRAWN	
SCN	08/25
CHECKED	
REVIEWED	

HDR ENGINEERING INC.
CONSULTING ENGINEERS
CHARLESTON, WV
681-341-6100

SHEET OF
BRIDGE NO. 2563.6

SNOLEN $DD-MMM-YYYY HH:MM$ pw://pwhdruseas02.intranet.hdr:HDR_US_East_02/Documents/WV_DOT/WVDOT-Eugene_Carter_Bridge_3/6.0_CAD_BIM/6.2_WIP/HDR/6.2.2_Sheet_Files/23_Structure/4.035 Typical Section Ramp F

PROJECT NUMBERS		DISTRICT	COUNTY	SHEET NO.	TOTAL
STATE	FEDERAL				
S320-64-57.44 00	NHPP-0064 (497)D	1	KANAWHA		

DECK REINFORCING SCHEDULE EASTBOUND 1 OF 3
TO BE DEVELOPED WHEN DETAILS ARE COMPLETE

NO.	REVISION	DATE	BY

WEST VIRGINIA DEPARTMENT OF TRANSPORTATION
DIVISION OF HIGHWAYS
ENGINEERING DIVISION

I-64 OVER KANAWHA RIVER
EUGENE A. CARTER MEMORIAL BRIDGE +3

REINFORCING SCHEDULE
DECK MAINLINE EB (1 OF 3)

DESIGNED	KCO	DATE	12/25
DRAWN	SCN		12/25
CHECKED			
REVIEWED			

HDR ENGINEERING INC.
CONSULTING ENGINEERS
CHARLESTON, WV
681-341-6100

SHEET
OF
BRIDGE NO.
2563.6

SNOLEN $DD-MMM-YYYY HH:MM$ pw://pwhdruseas02.intranet.hdr-HDR_US_East_02/Documents/WV_DOT/WVDOT-Eugene_Carter_Bridge_3/6.0_CAD_BIM/6.2_WIP/HDR/6.2.2_Sheet_Files/23_Structure/4.036a Eastbound Deck Reinforcing.dgn

PROJECT NUMBERS		DISTRICT	COUNTY	SHEET NO.	TOTAL
STATE	FEDERAL				
S320-64-57.44 00	NHPP-0064 (497)D	1	KANAWHA		

DECK REINFORCING SCHEDULE EASTBOUND 2 OF 3
TO BE DEVELOPED WHEN DETAILS ARE COMPLETE

NO.	REVISION	DATE	BY

WEST VIRGINIA DEPARTMENT OF TRANSPORTATION
DIVISION OF HIGHWAYS
ENGINEERING DIVISION

I-64 OVER KANAWHA RIVER
EUGENE A. CARTER MEMORIAL BRIDGE +3

REINFORCING SCHEDULE
DECK MAINLINE EB (2 OF 3)

DESIGNED	DATE
KCO	12/25
DRAWN	
SCN	12/25
CHECKED	
REVIEWED	

HDR ENGINEERING INC.
CONSULTING ENGINEERS
CHARLESTON, WV
681-341-6100

SHEET OF

BRIDGE NO. 2563.6

SNOLEN $DD-MMM-YYYY HH:MM$ pw://pwhdruseas02.intranet.hdr-HDR_US_East_02/Documents/WV_DOT/WVDOT-Eugene_Carter_Bridge_3/6.0_CAD_BIM/6.2_WIP/HDR/6.2.2_Sheet_Files/23_Structure/4.036b Eastbound Deck Reinforcing.dgn

PROJECT NUMBERS		DISTRICT	COUNTY	SHEET NO.	TOTAL
STATE	FEDERAL				
S320-64-57.44 00	NHPP-0064 (497)D	1	KANAWHA		

DECK REINFORCING SCHEDULE EASTBOUND 3 OF 3
TO BE DEVELOPED WHEN DETAILS ARE COMPLETE

NO.	REVISION	DATE	BY

WEST VIRGINIA DEPARTMENT OF TRANSPORTATION
DIVISION OF HIGHWAYS
ENGINEERING DIVISION

I-64 OVER KANAWHA RIVER
EUGENE A. CARTER MEMORIAL BRIDGE +3

REINFORCING SCHEDULE
DECK MAINLINE EB (3 OF 3)

DESIGNED	DATE
KCO	12/25
DRAWN	
SCN	12/25
CHECKED	
REVIEWED	

HDR ENGINEERING INC.
CONSULTING ENGINEERS
CHARLESTON, WV
681-341-6100

SHEET OF

BRIDGE NO. 2563.6

SNOLEN $DD-MMM-YYYY HH:MM$ pw://pwhdruseas02.intranet.hdr-HDR_US_East_02/Documents/WV_DOT/WVDOT-Eugene_Carter_Bridge_3/6.0_CAD_BIM/6.2_WIP/HDR/6.2.2_Sheet_Files/23_Structure/4.036c Eastbound Deck Reinforcing.dgn

PROJECT NUMBERS		DISTRICT	COUNTY	SHEET NO.	TOTAL
STATE	FEDERAL				
S320-64-57.44 00	NHPP-0064 (497)D	1	KANAWHA		

DECK REINFORCING SCHEDULE RAMP D
TO BE DEVELOPED WHEN DETAILS ARE COMPLETE

NO.	REVISION	DATE	BY

WEST VIRGINIA DEPARTMENT OF TRANSPORTATION
DIVISION OF HIGHWAYS
ENGINEERING DIVISION

I-64 OVER KANAWHA RIVER
EUGENE A. CARTER MEMORIAL BRIDGE +3

REINFORCING SCHEDULE RAMP D

DESIGNED	KCO	12/25
DRAWN	SCN	12/25
CHECKED		
REVIEWED		

HDR ENGINEERING INC.
CONSULTING ENGINEERS
CHARLESTON, WV
681-341-6100

SHEET OF
BRIDGE NO. 2563.6

SNOLEN $DD-MMM-YYYY HH:MM$ pw://pwhdruseas02.intranet.hdr-HDR_US_East_02/Documents/WV_DOT/WVDOT-Eugene_Carter_Bridge_3/6.0_CAD_BIM/6.2_WIP/HDR/6.2.2_Sheet_Files/23_Structure/4.036d Eastbound Deck Reinforcing.dgn

PROJECT NUMBERS		DISTRICT	COUNTY	SHEET NO.	TOTAL
STATE	FEDERAL				
S320-64-57.44 00	NHPP-0064 (497)D	1	KANAWHA		

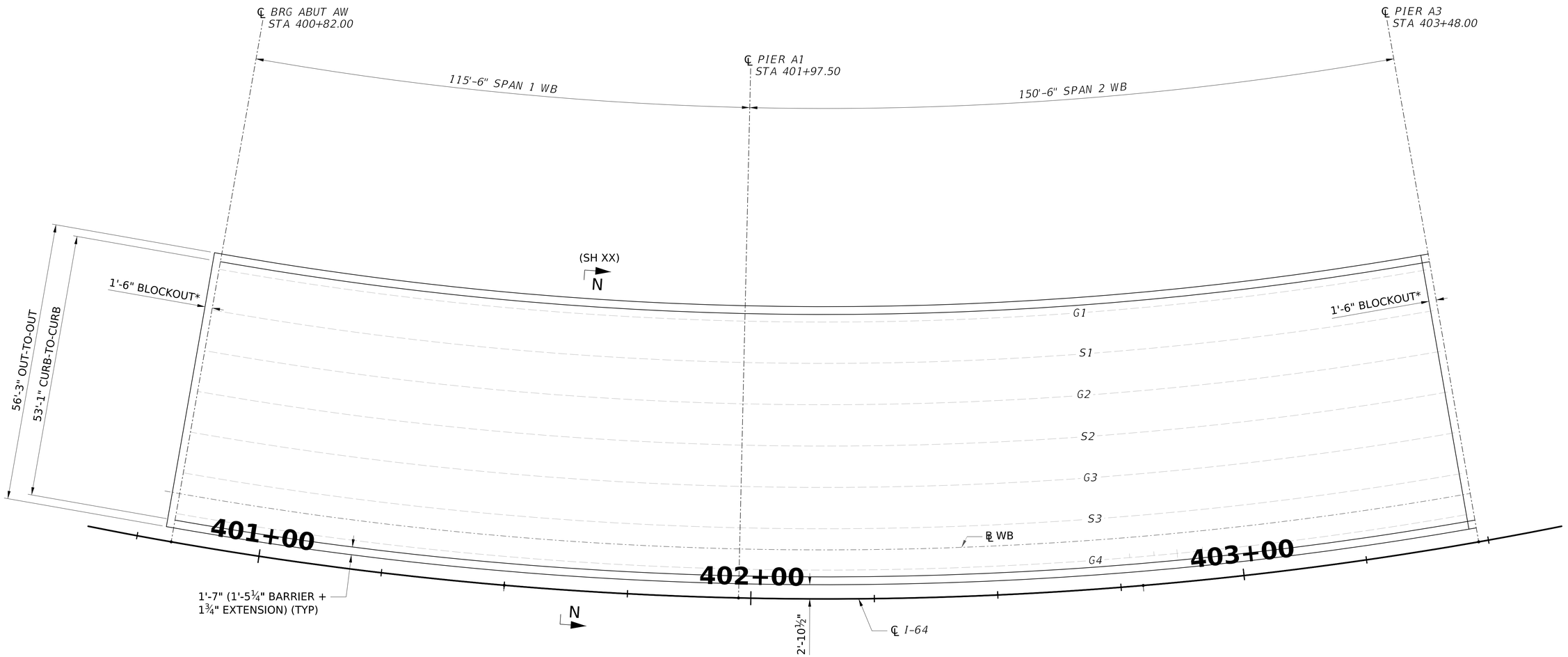

* - FOR BLOCKOUT DETAILS AND REINFORCEMENT, SEE SHEET XX.

DECK PLACEMENT PLAN (WB)

(SPAN 1 AND SPAN 2)

SCALE : 2 0 4 8 12 ft.

3/32" = 1'-0"

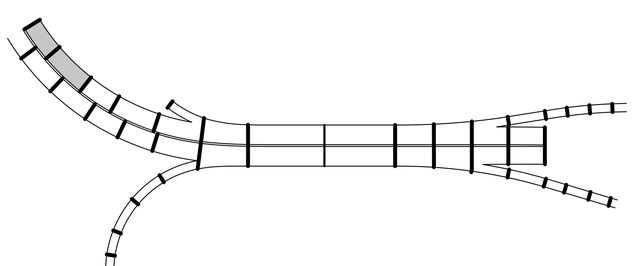

LOCATION KEY

MIN LAP LENGTHS

DECK BAR LAPS
#4 = 1'-7"
#5 = 2'-0"
#6 = 2'-5"

BARRIER BAR LAPS
#5 = 2'-7"
#7 = 3'-7"
#8 = 4'-1"

NOTES:

1. FOR GENERAL NOTES, SEE SHEETS THRU .
2. FOR DECK PLACEMENT NOTES, SEE SHEET .

NO.	REVISION	DATE	BY

WEST VIRGINIA DEPARTMENT OF TRANSPORTATION
DIVISION OF HIGHWAYS
ENGINEERING DIVISION

I-64 OVER KANAWHA RIVER
EUGENE A. CARTER MEMORIAL BRIDGE +3

DECK PLACEMENT PLAN (WB) SPAN 1 AND SPAN 2

DESIGNED	KCO	DATE	10/25
DRAWN	SCN		10/25
CHECKED			
REVIEWED			

HDR ENGINEERING INC.
CONSULTING ENGINEERS
CHARLESTON, WV
681-341-6100

SHEET OF

BRIDGE NO. 2563.6

SNOLEN $DD-MMM-YYYY HH:MM$ pw://pwhdruseas02.Intranet.hdr:HDR_US_East_02/Documents/WV_DOT/WVDOT-Eugene_Carter_Bridge_3/6.0_CAD_BIM/6.2_WIP/HDR/6.2.2_Sheet_Files/23_Structure/4.040 Deck Plan Spans 1-2 WB

PROJECT NUMBERS		DISTRICT	COUNTY	SHEET NO.	TOTAL
STATE	FEDERAL				
S320-64-57.44 00	NHPP-0064 (497)D	1	KANAWHA		

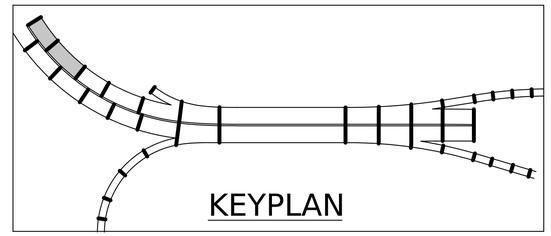

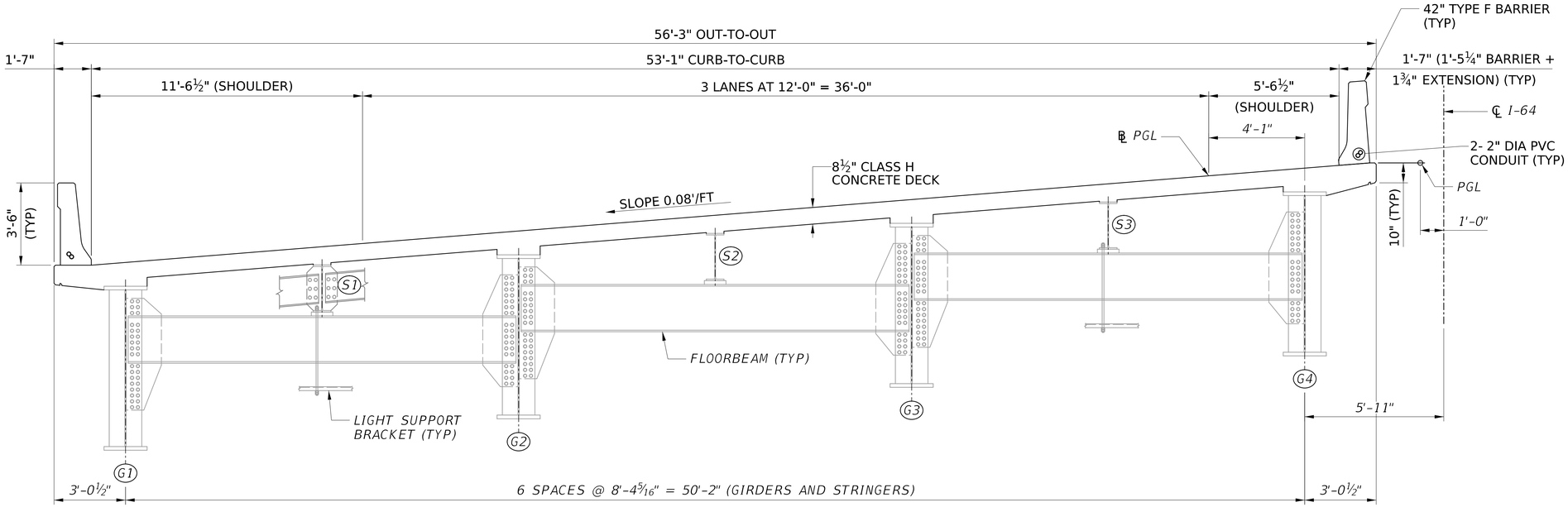

DECK SECTION N-N

NOTES:

1. FOR GENERAL NOTES, SEE SHEETS AND .
2. FOR DECK PLACEMENT NOTES, SEE SHEET .

SCALE : 1 0 1 2 3 ft.
⅜" = 1'-0"

NO.	REVISION	DATE	BY

WEST VIRGINIA DEPARTMENT OF TRANSPORTATION
DIVISION OF HIGHWAYS
ENGINEERING DIVISION

I-64 OVER KANAWHA RIVER
EUGENE A. CARTER MEMORIAL BRIDGE +3
DECK SECTION (WB)
SPAN 1 AND SPAN 2

DESIGNED	DATE
KCO	08/25
DRAWN	
SCN	08/25
CHECKED	
REVIEWED	

HDR ENGINEERING INC.
CONSULTING ENGINEERS
CHARLESTON, WV
681-341-6100

SHEET OF
BRIDGE NO. 2563.6

$DD-MMM-YYYY HH:MM$ pw://pwhdruseas02.intranet.hdr:HDR_US_East_02/Documents/WV_DOT/WVDOT-Eugene_Carter_Bridge_3/6.0_CAD_BIM/6.2_WIP/HDR/6.2.2_Sheet_Files/23_Structure/4.041 Spans A1-A2 Typical Section WB
SNOLEN

PROJECT NUMBERS		DISTRICT	COUNTY	SHEET NO.	TOTAL
STATE	FEDERAL				
S320-64-57.44 00	NHPP-0064 (497)D	1	KANAWHA		

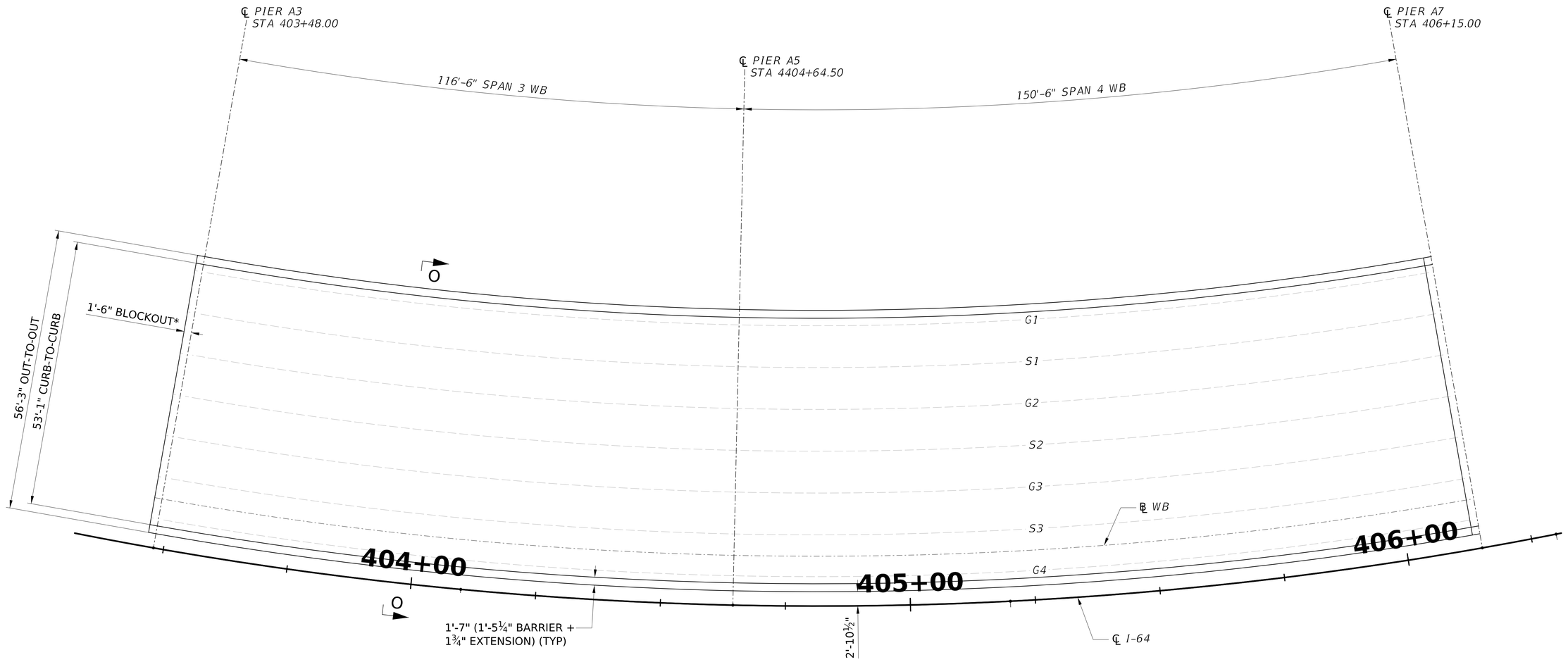

DECK PLACEMENT PLAN (WB)

(SPAN 3 AND SPAN 4)

SCALE : 2 0 4 8 12 ft.

3/32" = 1'-0"

* - FOR BLOCKOUT DETAILS AND REINFORCEMENT, SEE SHEET XX.

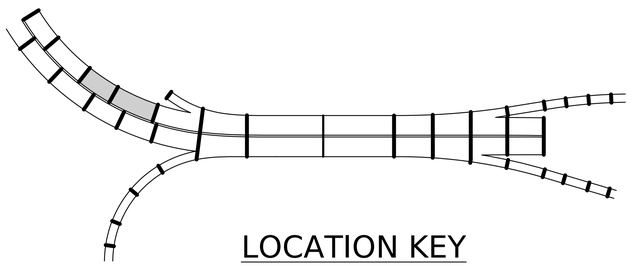

LOCATION KEY

MIN LAP LENGTHS

DECK BAR LAPS
#4 = 1'-7"
#5 = 2'-0"
#6 = 2'-5"

BARRIER BAR LAPS
#5 = 2'-7"
#7 = 3'-7"
#8 = 4'-1"

NOTES:

1. FOR GENERAL NOTES, SEE SHEETS THRU .
2. FOR DECK PLACEMENT NOTES, SEE SHEET .

NO.	REVISION	DATE	BY

WEST VIRGINIA DEPARTMENT OF TRANSPORTATION
DIVISION OF HIGHWAYS
ENGINEERING DIVISION

I-64 OVER KANAWHA RIVER
EUGENE A. CARTER MEMORIAL BRIDGE +3
DECK PLACEMENT PLAN (WB)
SPAN 3 AND SPAN 4

DESIGNED	DATE
KCO	10/25
DRAWN	
SCN	10/25
CHECKED	
REVIEWED	

HDR ENGINEERING INC.
CONSULTING ENGINEERS
CHARLESTON, WV
681-341-6100

SHEET
OF
BRIDGE NO.
2563.6

pw://pwhdruseas02.intranet.hdr:HDR_US_East_02/Documents/WV_DOT/WVDOT-Eugene_Carter_Bridge_3/6.0_CAD_BIM/6.2_WIP/HDR/6.2.2_Sheet_Files/23_Structure/4.042 Deck Plan Spans 3-4 WB
$DD-MMM-YYYY HH:MM$
SNOLEN

PROJECT NUMBERS		DISTRICT	COUNTY	SHEET NO.	TOTAL
STATE	FEDERAL				
S320-64-57.44 00	NHPP-0064 (497)D	1	KANAWHA		

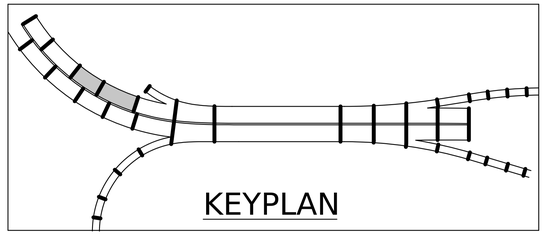

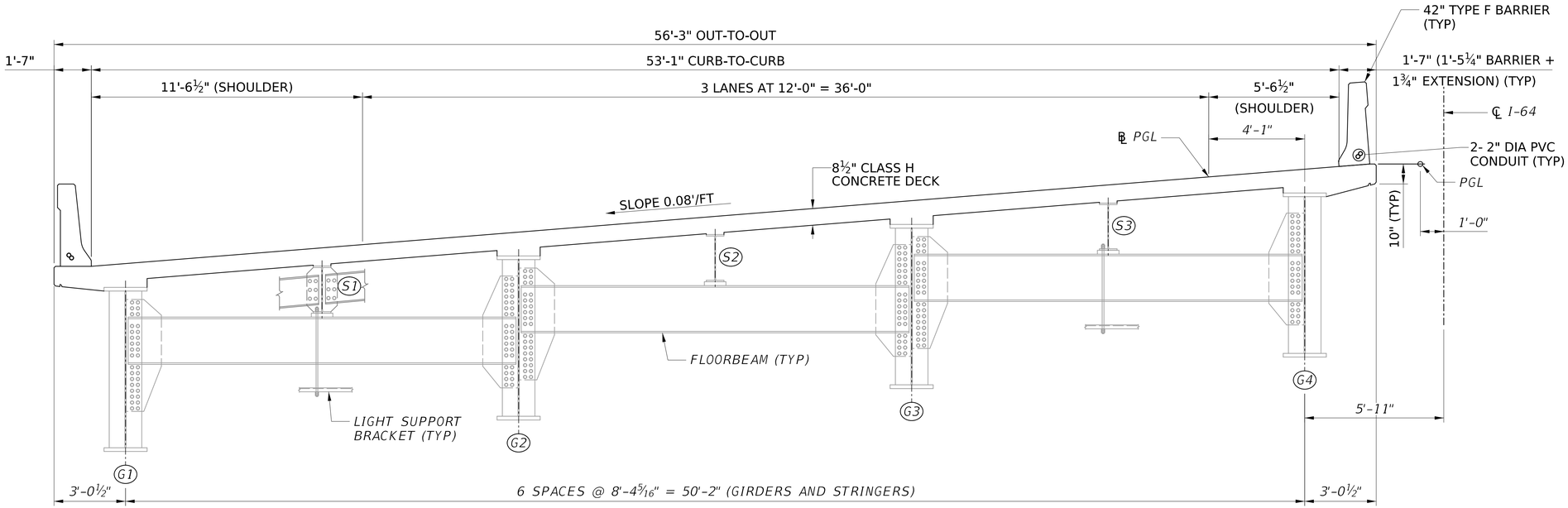

DECK SECTION O-O

NOTES:

1. FOR GENERAL NOTES, SEE SHEETS AND .
2. FOR DECK PLACEMENT NOTES, SEE SHEET .

SCALE : 1 0 1 2 3 ft.
⅜" = 1'-0"

NO.	REVISION	DATE	BY

WEST VIRGINIA DEPARTMENT OF TRANSPORTATION
DIVISION OF HIGHWAYS
ENGINEERING DIVISION

I-64 OVER KANAWHA RIVER
EUGENE A. CARTER MEMORIAL BRIDGE +3

DECK SECTION (WB)
SPAN 3 AND SPAN 4

DESIGNED	DATE
KCO	08/25
DRAWN	
SCN	08/25
CHECKED	
REVIEWED	

HDR ENGINEERING INC.
CONSULTING ENGINEERS
CHARLESTON, WV
681-341-6100

SHEET OF

BRIDGE NO. 2563.6

SNOLEN $DD-MMM-YYYY HH:MM$ pw://pwhdruseas02.intranet.hdr:HDR_US_East_02/Documents/WV_DOT/WVDOT-Eugene_Carter_Bridge_3/6.0_CAD_BIM/6.2_WIP/HDR/6.2.2_Sheet_Files/23_Structure/4.043 Spans A3-A4 Typical Section WB

PROJECT NUMBERS		DISTRICT	COUNTY	SHEET NO.	TOTAL
STATE	FEDERAL				
S320-64-57.44 00	NHPP-0064 (497)D	1	KANAWHA		

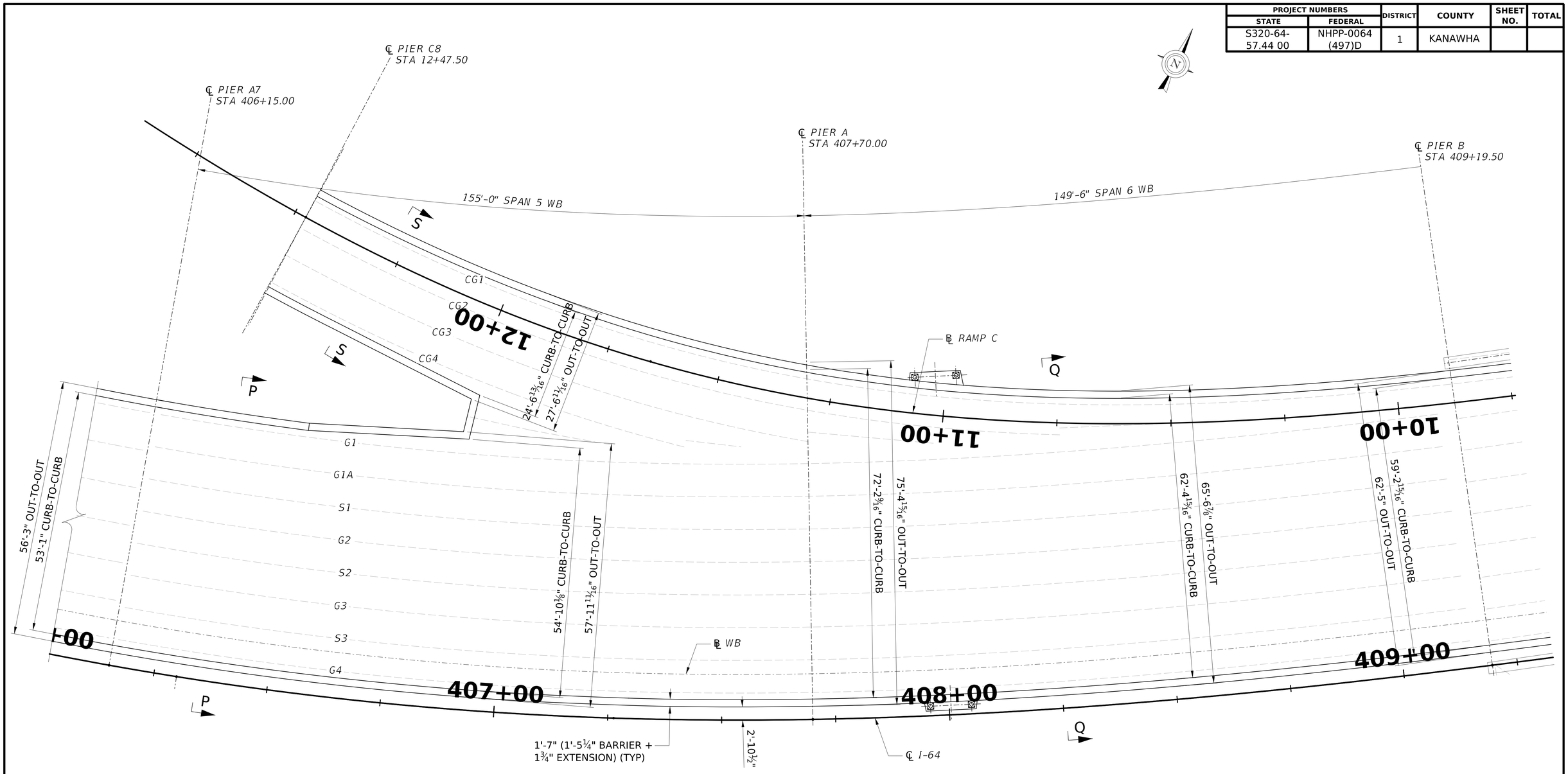

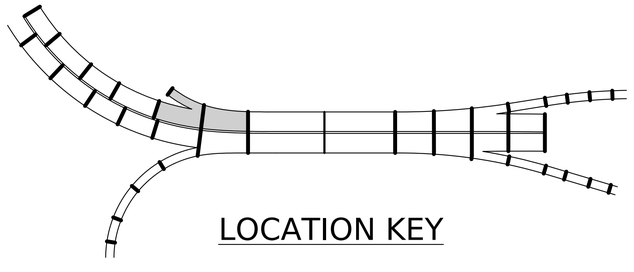

LOCATION KEY

DECK PLACEMENT PLAN (WB)

(SPAN 5 AND SPAN 6)

SCALE : 2 0 4 8 12 ft.

3/32" = 1'-0"

NOTES:

1. FOR GENERAL NOTES, SEE SHEETS THRU .
2. FOR DECK PLACEMENT NOTES, SEE SHEET .

NO.	REVISION	DATE	BY

WEST VIRGINIA DEPARTMENT OF TRANSPORTATION
DIVISION OF HIGHWAYS
ENGINEERING DIVISION

I-64 OVER KANAWHA RIVER
EUGENE A. CARTER MEMORIAL BRIDGE +3

DECK PLACEMENT PLAN (WB)
SPAN 5 AND SPAN 6

DESIGNED	DATE
KCO	10/25
DRAWN	
SCN	10/25
CHECKED	
REVIEWED	

HDR ENGINEERING INC.
CONSULTING ENGINEERS
CHARLESTON, WV
681-341-6100

SHEET OF

BRIDGE NO. 2563.6

SNOLEN $DD-MMM-YYYY HH:MM$ pw://pwhdruseas02.intranet.hdr:HDR_US_East_02/Documents/WV_DOT/WVDOT-Eugene_Carter_Bridge_3/6.0_CAD_BIM/6.2_WIP/HDR/6.2.2_Sheet_Files/23_Structure/4.044 Deck Plan Spans 5-6 WB

PROJECT NUMBERS		DISTRICT	COUNTY	SHEET NO.	TOTAL
STATE	FEDERAL				
S320-64-57.44 00	NHPP-0064 (497)D	1	KANAWHA		

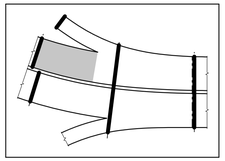

KEY PLAN

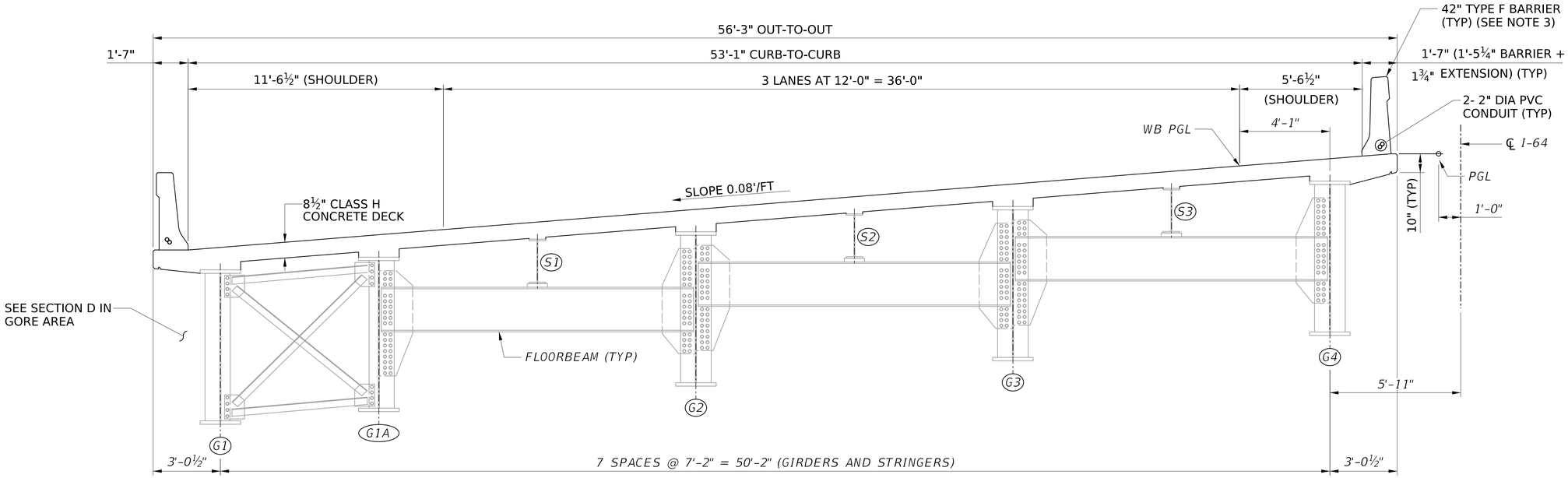

DECK SECTION P-P

NOTES:

1. FOR GENERAL NOTES, SEE SHEETS AND .
2. FOR DECK PLACEMENT NOTES, SEE SHEET .

SCALE : 1 0 1 2 3 ft.
⅜" = 1'-0"

NO.	REVISION	DATE	BY

WEST VIRGINIA DEPARTMENT OF TRANSPORTATION
DIVISION OF HIGHWAYS
ENGINEERING DIVISION

I-64 OVER KANAWHA RIVER
EUGENE A. CARTER MEMORIAL BRIDGE +3
DECK SECTION (WB)
SPAN 5 AND SPAN 6 (1 OF 3)

DESIGNED	DATE
KCO	08/25
DRAWN	
SCN	08/25
CHECKED	
REVIEWED	

HDR ENGINEERING INC.
CONSULTING ENGINEERS
CHARLESTON, WV
681-341-6100

SHEET OF
BRIDGE NO. 2563.6

SNOLEN $DD-MMM-YYYY HH:MM$ pw://pwhdruseas02.intranet.hdr:HDR_US_East_02/Documents/WV_DOT/WVDOT-Eugene_Carter_Bridge_3/6.0_CAD_BIM/6.2_WIP/HDR/6.2.2_Sheet_Files/23_Structure/4.045 Spans A5 -WB Typical Section BB

PROJECT NUMBERS		DISTRICT	COUNTY	SHEET NO.	TOTAL
STATE	FEDERAL				
S320-64-57.44 00	NHPP-0064 (497)D	1	KANAWHA		

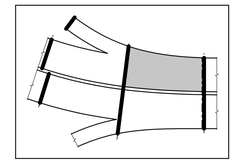

KEY PLAN

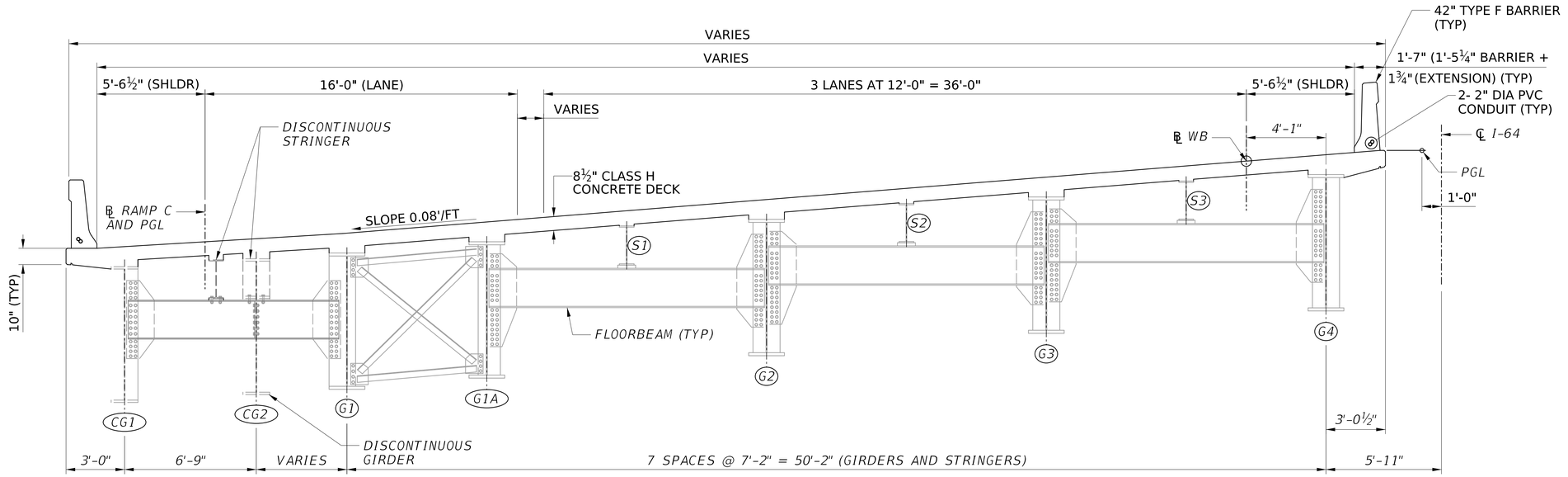

DECK SECTION Q-Q

NOTES:

1. FOR GENERAL NOTES, SEE SHEETS AND .
2. FOR DECK PLACEMENT NOTES, SEE SHEET .

NOT TO SCALE

NO.	REVISION	DATE	BY

WEST VIRGINIA DEPARTMENT OF TRANSPORTATION
DIVISION OF HIGHWAYS
ENGINEERING DIVISION

I-64 OVER KANAWHA RIVER
EUGENE A. CARTER MEMORIAL BRIDGE +3

DECK SECTION (WB)
SPAN 5 AND SPAN 6 (2 OF 3)

DESIGNED	DATE
KCO	08/25
DRAWN	
SCN	08/25
CHECKED	
REVIEWED	

HDR ENGINEERING INC.
CONSULTING ENGINEERS
CHARLESTON, WV
681-341-6100

SHEET OF

BRIDGE NO. 2563.6

SNOLEN $DD-MMM-YYYY HH:MM$ pw://pwhdruseas02.intranet.hdr:HDR_US_East_02/Documents/WV_DOT/WVDOT-Eugene_Carter_Bridge_3/6.0_CAD_BIM/6.2_WIP/HDR/6.2.2_Sheet_Files/23_Structure/4.048 Span 6 Typical Section WB 01

PROJECT NUMBERS		DISTRICT	COUNTY	SHEET NO.	TOTAL
STATE	FEDERAL				
S320-64-57.44 00	NHPP-0064 (497)D	1	KANAWHA		

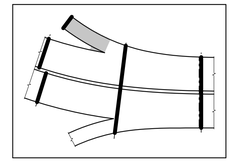

KEY PLAN

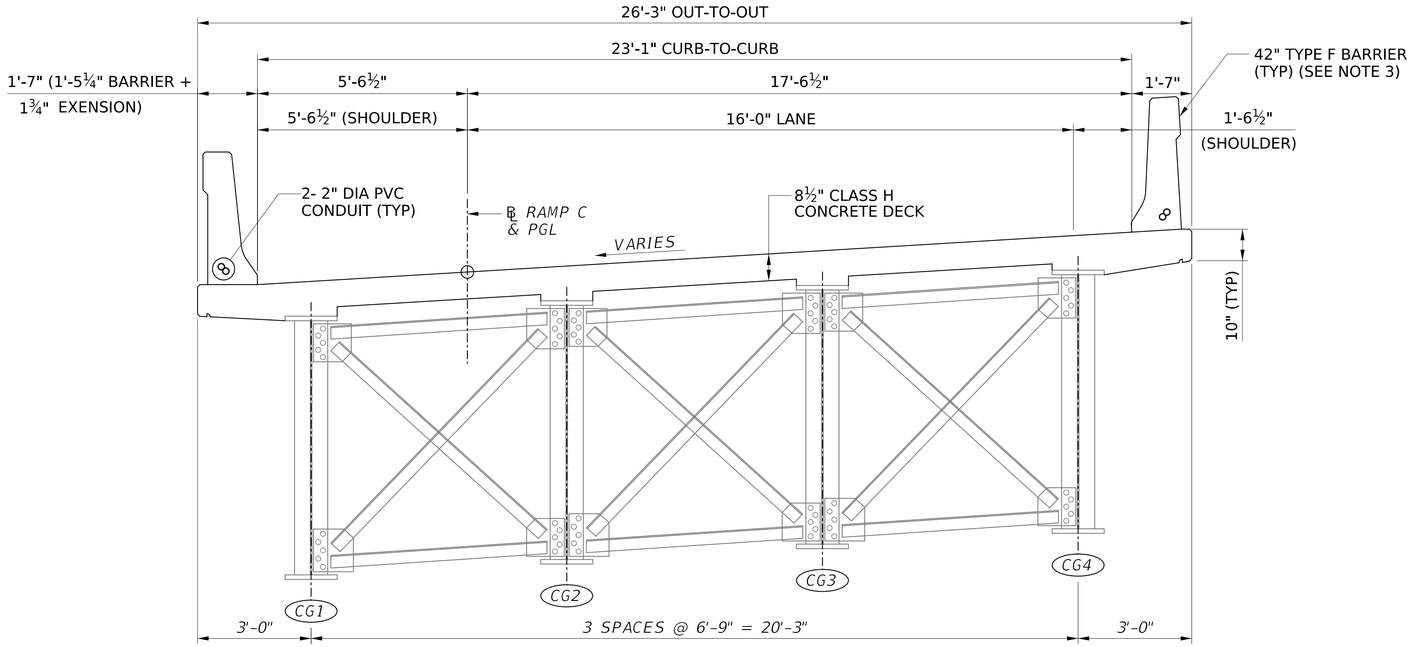

DECK SECTION S-S

NOTES:

1. FOR GENERAL NOTES, SEE SHEETS AND .
2. FOR DECK PLACEMENT NOTES, SEE SHEET .

SCALE : 1 0 1 2 ft.
½" = 1'-0"

NO.	REVISION	DATE	BY

WEST VIRGINIA DEPARTMENT OF TRANSPORTATION
DIVISION OF HIGHWAYS
ENGINEERING DIVISION

I-64 OVER KANAWHA RIVER
EUGENE A. CARTER MEMORIAL BRIDGE +3
DECK SECTION (WB)
SPAN 5 AND SPAN 6 (3 OF 3)

DESIGNED	DATE
KCO	08/25
DRAWN	
SCN	08/25
CHECKED	
REVIEWED	

HDR ENGINEERING INC.
CONSULTING ENGINEERS
CHARLESTON, WV
681-341-6100

SHEET
OF
BRIDGE NO.
2563.6

$DD-MMM-YYYY HH:MM$ pw://pwhdruseas02.intranet.hdr:HDR_US_East_02/Documents/WV_DOT/WVDOT-Eugene_Carter_Bridge_3/6.0_CAD_BIM/6.2_WIP/HDR/6.2.2_Sheet_Files/23_Structure/4.049 Typical Section Ramp C
SNOLEN

PROJECT NUMBERS		DISTRICT	COUNTY	SHEET NO.	TOTAL
STATE	FEDERAL				
S320-64-57.44 00	NHPP-0064 (497)D	1	KANAWHA		

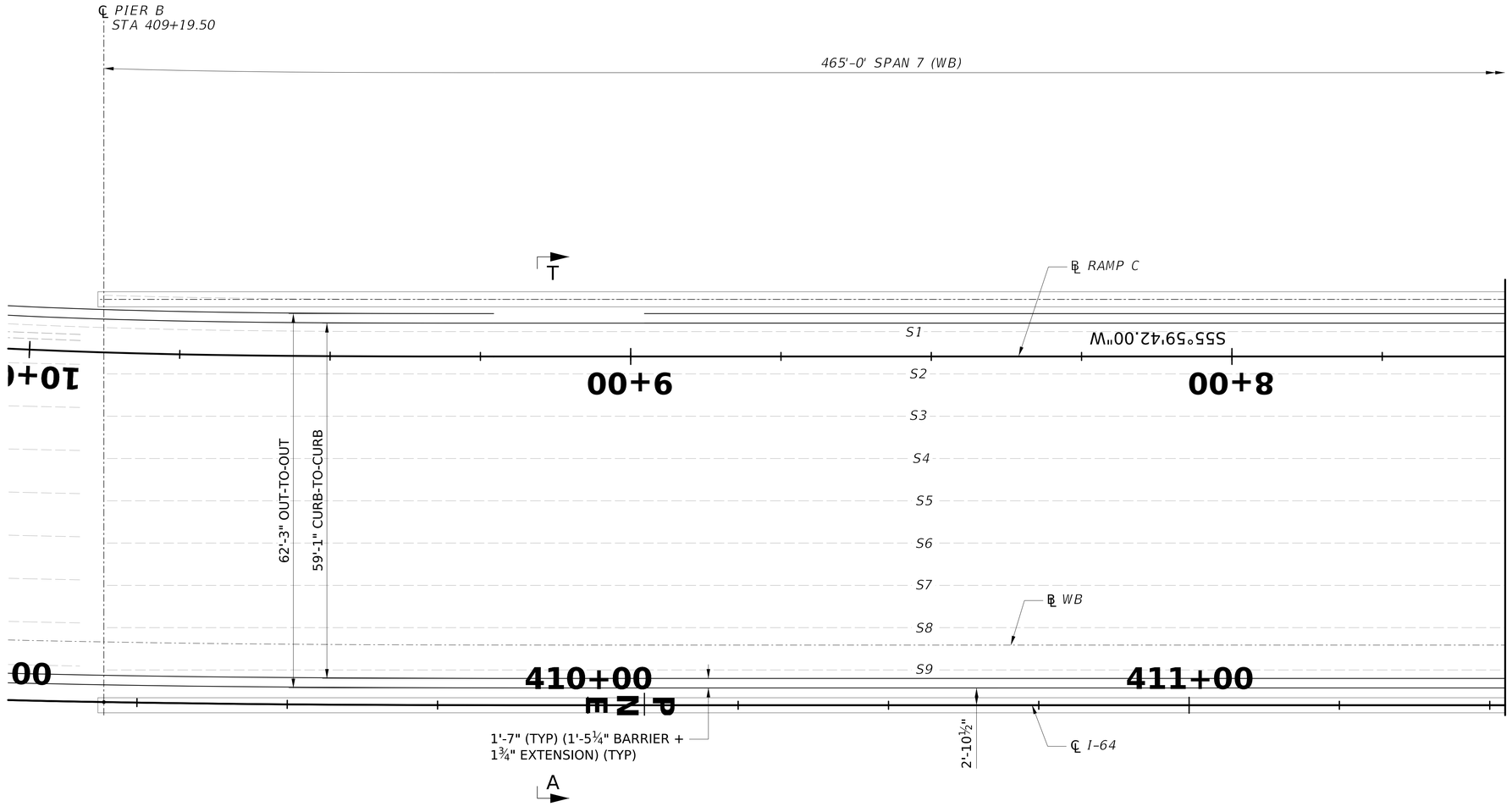

DECK PLACEMENT PLAN (WB)

(SPAN 7)

SCALE : 2 0 4 8

3/32" = 1'-0"

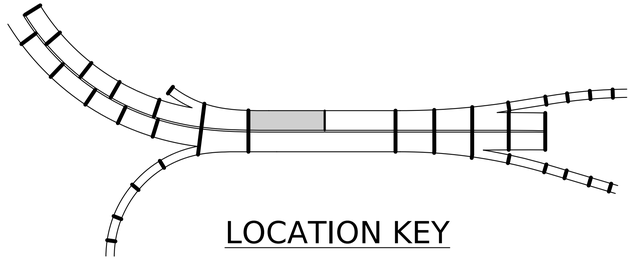

LOCATION KEY

12 ft.

NOTES:

1. FOR GENERAL NOTES, SEE SHEETS THRU .
2. FOR DECK PLACEMENT NOTES, SEE SHEET .

MIN LAP LENGTHS

DECK BAR LAPS
#4 = 1'-7"
#5 = 2'-0"
#6 = 2'-5"

BARRIER BAR LAPS
#5 = 2'-7"
#7 = 3'-7"
#8 = 4'-1"

NO.	REVISION	DATE	BY

WEST VIRGINIA DEPARTMENT OF TRANSPORTATION
DIVISION OF HIGHWAYS
ENGINEERING DIVISION

I-64 OVER KANAWHA RIVER
EUGENE A. CARTER MEMORIAL BRIDGE +3

DECK PLACEMENT PLAN WB
SPAN 7 (1 OF 2)

DESIGNED	KCO	DATE	10/25
DRAWN	SCN		10/25
CHECKED			
REVIEWED			

HDR ENGINEERING INC.
CONSULTING ENGINEERS
CHARLESTON, WV
681-341-6100

SHEET
OF
BRIDGE NO. 2563.6

SNOLEN $DD-MMM-YYYY HH:MM$ pw://pwhdruseas02.intranet.hdr:HDR_US_East_02/Documents/WV_DOT/WVDOT-Eugene_Carter_Bridge_3/6.0_CAD_BIM/6.2_WIP/HDR/6.2.2_Sheet_Files/23_Structure/4.054 Deck Plan Spans 7-01 WB

PROJECT NUMBERS		DISTRICT	COUNTY	SHEET NO.	TOTAL
STATE	FEDERAL				
S320-64-57.44 00	NHPP-0064 (497)D	1	KANAWHA		

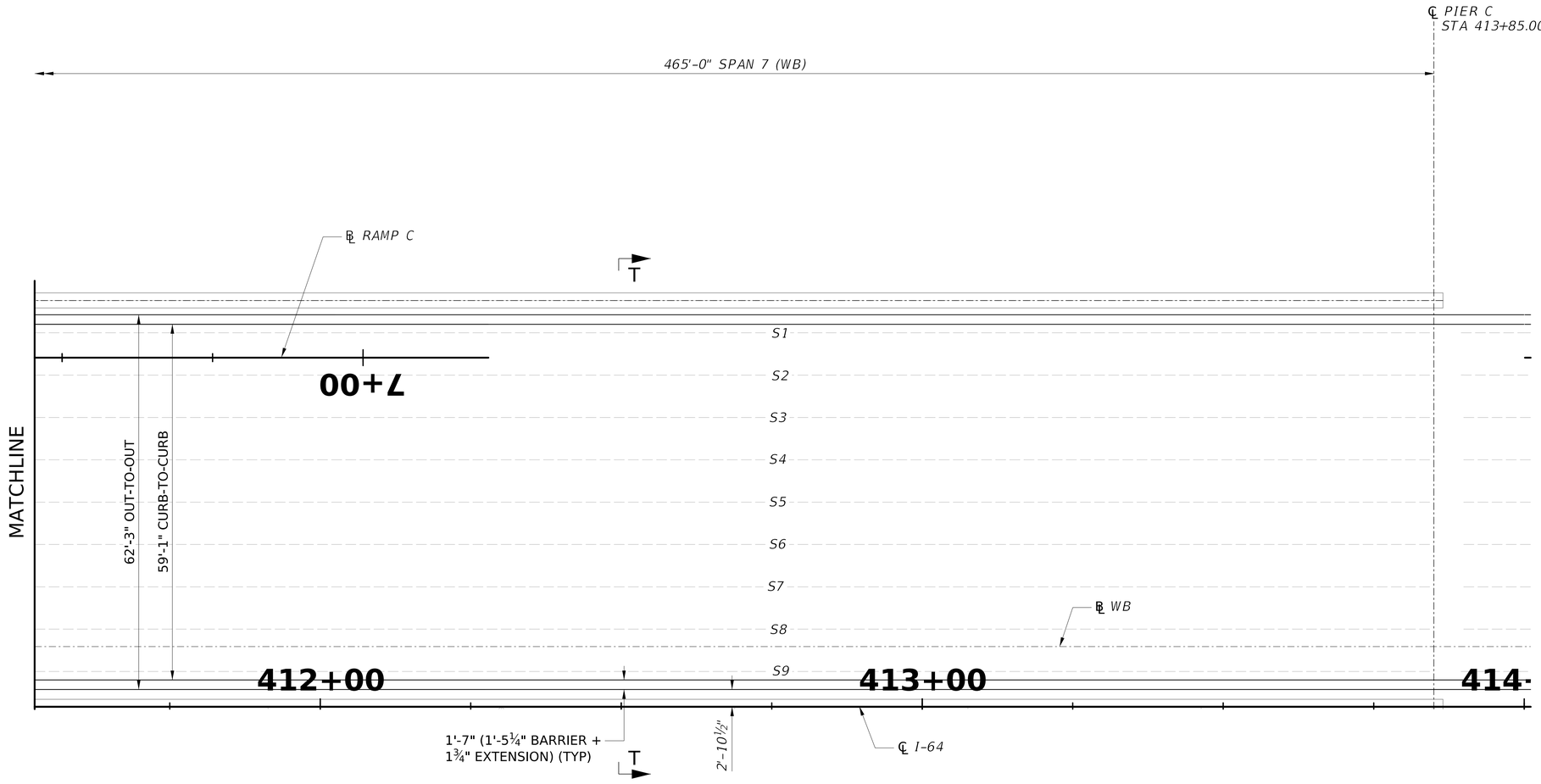

DECK PLACEMENT PLAN (WB)

(SPAN 7)

SCALE : 2 0 4 8
3/32" = 1'-0"

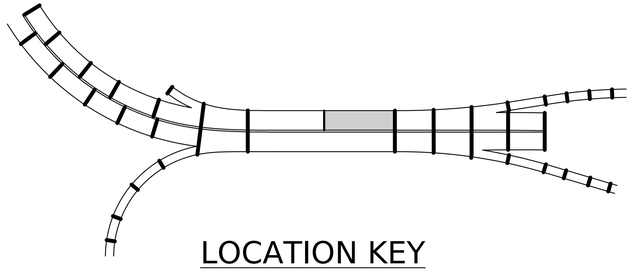

LOCATION KEY

MIN LAP LENGTHS

DECK BAR LAPS
#4 = 1'-7"
#5 = 2'-0"
#6 = 2'-5"

BARRIER BAR LAPS
#5 = 2'-7"
#7 = 3'-7"
#8 = 4'-1"

NOTES:

1. FOR GENERAL NOTES, SEE SHEETS THRU .
2. FOR DECK PLACEMENT NOTES, SEE SHEET .

NO.	REVISION	DATE	BY

WEST VIRGINIA DEPARTMENT OF TRANSPORTATION
DIVISION OF HIGHWAYS
ENGINEERING DIVISION

I-64 OVER KANAWHA RIVER
EUGENE A. CARTER MEMORIAL BRIDGE +3

DECK PLACEMENT PLAN (WB)
SPAN 7 (2 OF 2)

DESIGNED	DATE
KCO	09/25
DRAWN	
SCN	09/25
CHECKED	
REVIEWED	

HDR ENGINEERING INC.
CONSULTING ENGINEERS
CHARLESTON, WV
681-341-6100

SHEET
OF
BRIDGE NO.
2563.6

SNOLEN $DD-MMM-YYYY HH:MM$ pw://pwhdruseas02.intranet.hdr:HDR_US_East_02/Documents/WV_DOT/WVDOT-Eugene_Carter_Bridge_3/6.0_CAD_BIM/6.2_WIP/HDR/6.2.2_Sheet_Files/23_Structure/4.055 Deck Plan Spans 7-02 WB

PROJECT NUMBERS		DISTRICT	COUNTY	SHEET NO.	TOTAL
STATE	FEDERAL				
S320-64-57.44 00	NHPP-0064 (497)D	1	KANAWHA		

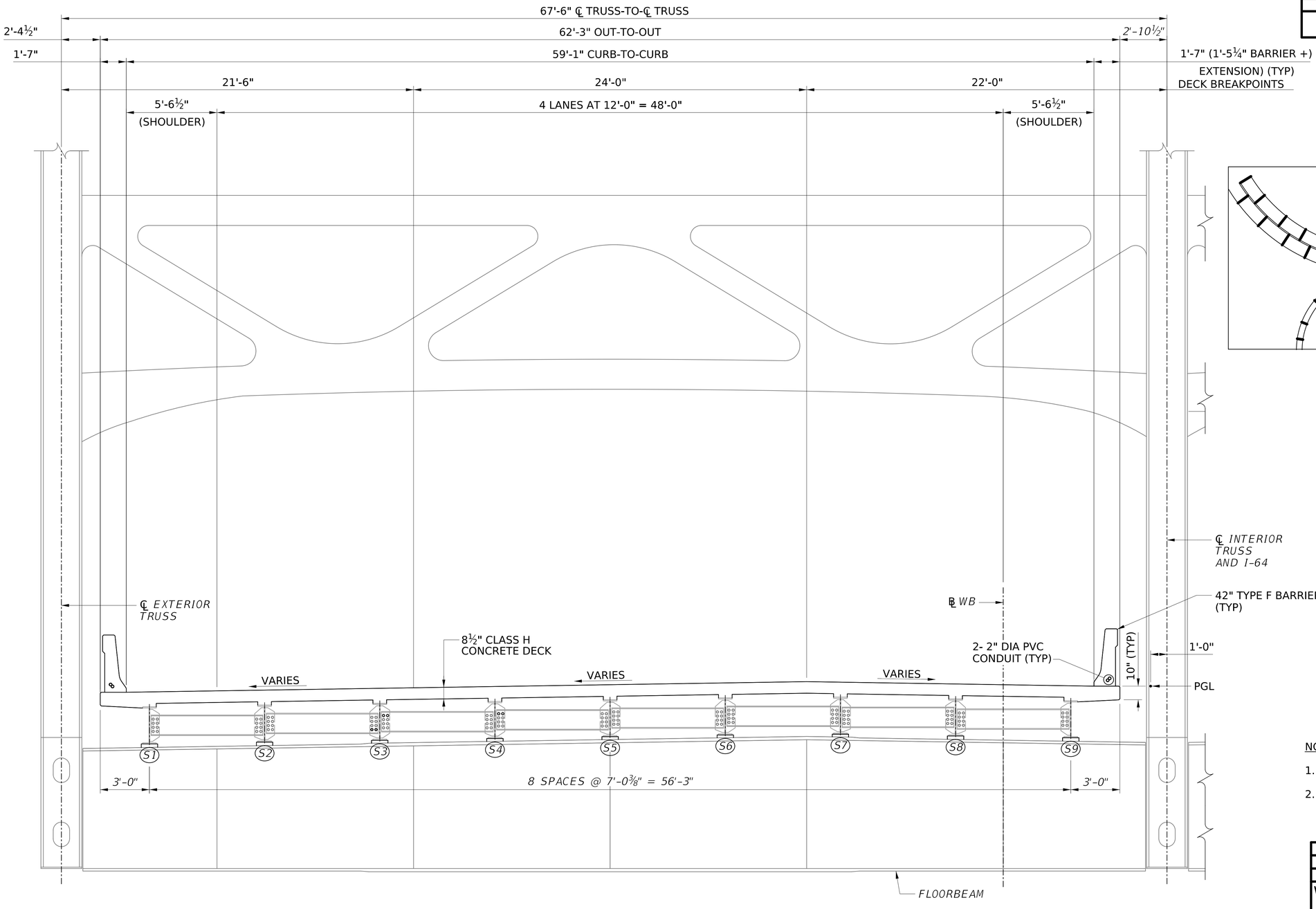

DECK SECTION T-T

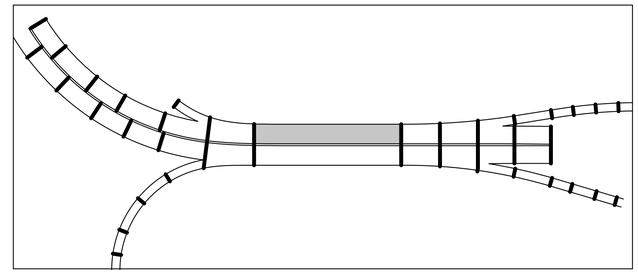

KEY PLAN

NOTES:

1. FOR GENERAL NOTES, SEE SHEETS AND .
2. FOR DECK PLACEMENT NOTES, SEE SHEET .

NOT TO SCALE

NO.	REVISION	DATE	BY

WEST VIRGINIA DEPARTMENT OF TRANSPORTATION
DIVISION OF HIGHWAYS
ENGINEERING DIVISION

I-64 OVER KANAWHA RIVER
EUGENE A. CARTER MEMORIAL BRIDGE +3
DECK SECTION (WB)
SPAN 7

DESIGNED	DATE
KCO	08/25
DRAWN	
SCN	08/25
CHECKED	
REVIEWED	

HDR ENGINEERING INC.
CONSULTING ENGINEERS
CHARLESTON, WV
681-341-6100

SHEET OF
BRIDGE NO. 2563.6

SNOLEN $DD-MMM-YYYY HH:MM$ pw://pwhdruseas02.intranet.hdr:HDR_US_East_02/Documents/WV_DOT/WVDOT-Eugene_Carter_Bridge_3/6.0_CAD_BIM/6.2_CAD_BIM/6.2_WIP/HDR/6.2.2_Sheet_Files/23_Structure/4.056 Typical Section Span 7 WB 01

PROJECT NUMBERS		DISTRICT	COUNTY	SHEET NO.	TOTAL
STATE	FEDERAL				
S320-64-57.44 00	NHPP-0064 (497)D	1	KANAWHA		

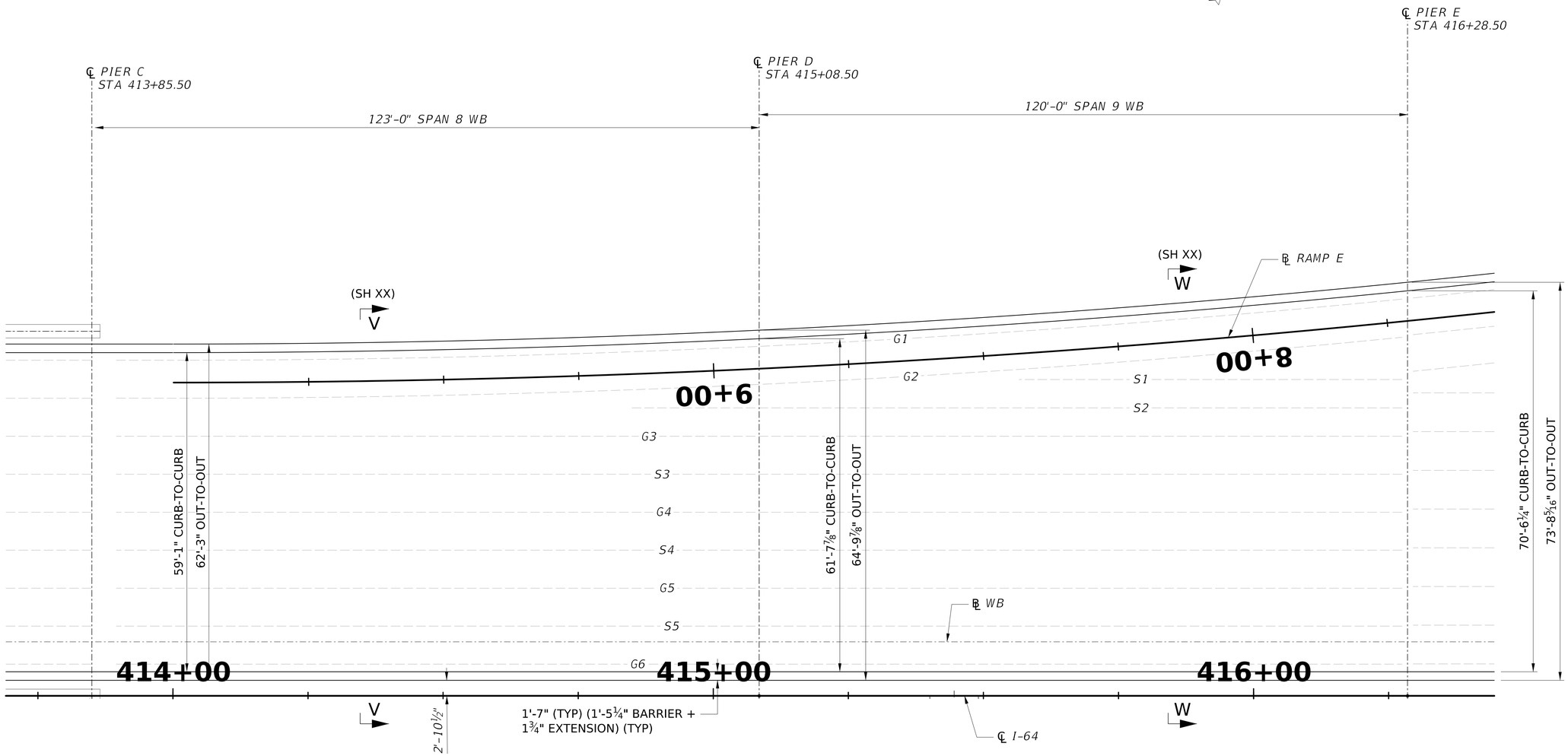

DECK PLACEMENT PLAN (WB)

(SPAN 8 AND SPAN 9)

SCALE : 2 0 4 8

3/32" = 1'-0"

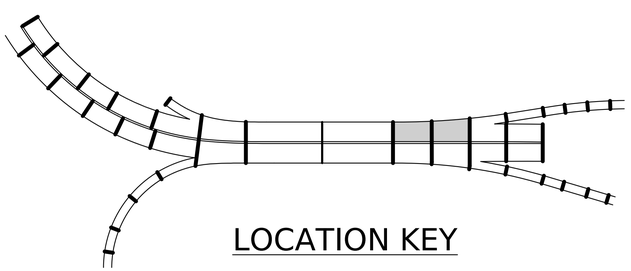

LOCATION KEY

MIN LAP LENGTHS

DECK BAR LAPS
#4 = 1'-7"
#5 = 2'-0"
#6 = 2'-5"

BARRIER BAR LAPS
#5 = 2'-7"
#7 = 3'-7"
#8 = 4'-1"

NOTES:

1. FOR GENERAL NOTES, SEE SHEETS THRU .
2. FOR DECK PLACEMENT NOTES, SEE SHEET .

NO.	REVISION	DATE	BY

WEST VIRGINIA DEPARTMENT OF TRANSPORTATION
DIVISION OF HIGHWAYS
ENGINEERING DIVISION

I-64 OVER KANAWHA RIVER
EUGENE A. CARTER MEMORIAL BRIDGE +3

DECK PLACEMENT PLAN (WB)
SPAN 8 AND SPAN 9

DESIGNED	DATE
KCO	10/25
DRAWN	
SCN	10/25
CHECKED	
REVIEWED	

HDR ENGINEERING INC.
CONSULTING ENGINEERS
CHARLESTON, WV
681-341-6100

SHEET OF

BRIDGE NO. 2563.6

SNOLEN $DD-MMM-YYYY HH:MM$ pw://pwhdruseas02.intranet.hdr:HDR_US_East_02/Documents/WV_DOT/WVDOT-Eugene_Carter_Bridge_3/6.0_CAD_BIM/6.2_WIP/HDR/6.2.2_Sheet_Files/23_Structure/4.058 Deck Plan Spans 8-9 WB

PROJECT NUMBERS		DISTRICT	COUNTY	SHEET NO.	TOTAL
STATE	FEDERAL				
S320-64-57.44 00	NHPP-0064 (497)D	1	KANAWHA		

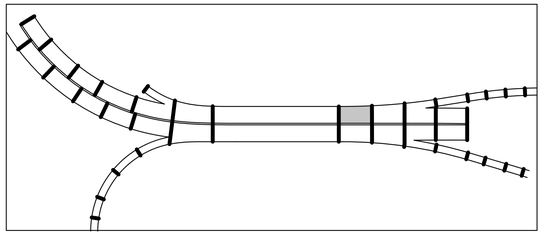

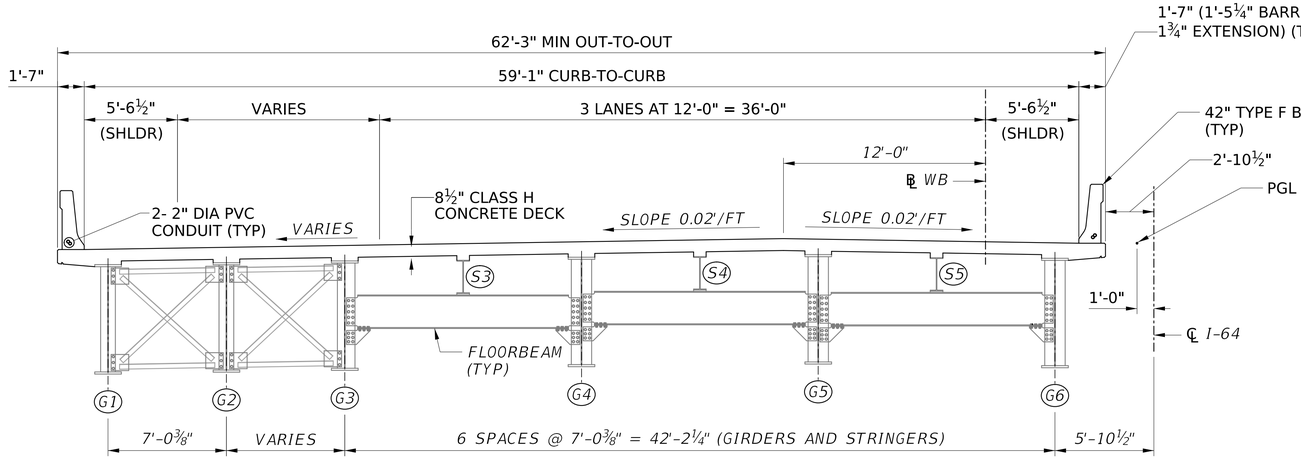

SECTION V-V
(LOOKING AHEAD STATION)

NOTES:

1. FOR GENERAL NOTES, SEE SHEETS AND .
2. FOR DECK PLACEMENT NOTES, SEE SHEET .

KEY PLAN

NOT TO SCALE

NO.	REVISION	DATE	BY

WEST VIRGINIA DEPARTMENT OF TRANSPORTATION
DIVISION OF HIGHWAYS
ENGINEERING DIVISION

I-64 OVER KANAWHA RIVER
EUGENE A. CARTER MEMORIAL BRIDGE +3
DECK SECTION (WB)
SPAN 8 AND SPAN 9 (1 OF 2)

DESIGNED	KCO	08/25
DRAWN	SCN	08/25
CHECKED		
REVIEWED		

HDR ENGINEERING INC.
CONSULTING ENGINEERS
CHARLESTON, WV
681-341-6100

SHEET OF
BRIDGE NO. 2563.6

SNOLEN $DD-MMM-YYYY HH:MM$ pw://pwhdruseas02.intranet.hdr:HDR_US_East_02/Documents/WV_DOT/WVDOT-Eugene_Carter_Bridge_3/6.0_CAD_BIM/6.2_WIP/HDR/6.2.2_Sheet_Files/23_Structure/4.059 Typical Section Span 8

PROJECT NUMBERS		DISTRICT	COUNTY	SHEET NO.	TOTAL
STATE	FEDERAL				
S320-64-57.44 00	NHPP-0064 (497)D	1	KANAWHA		

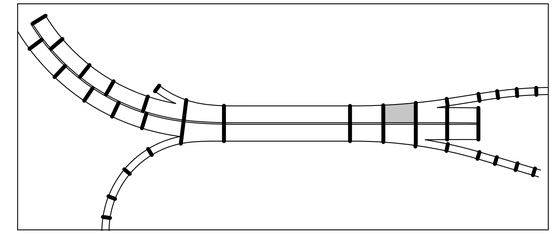

KEY PLAN

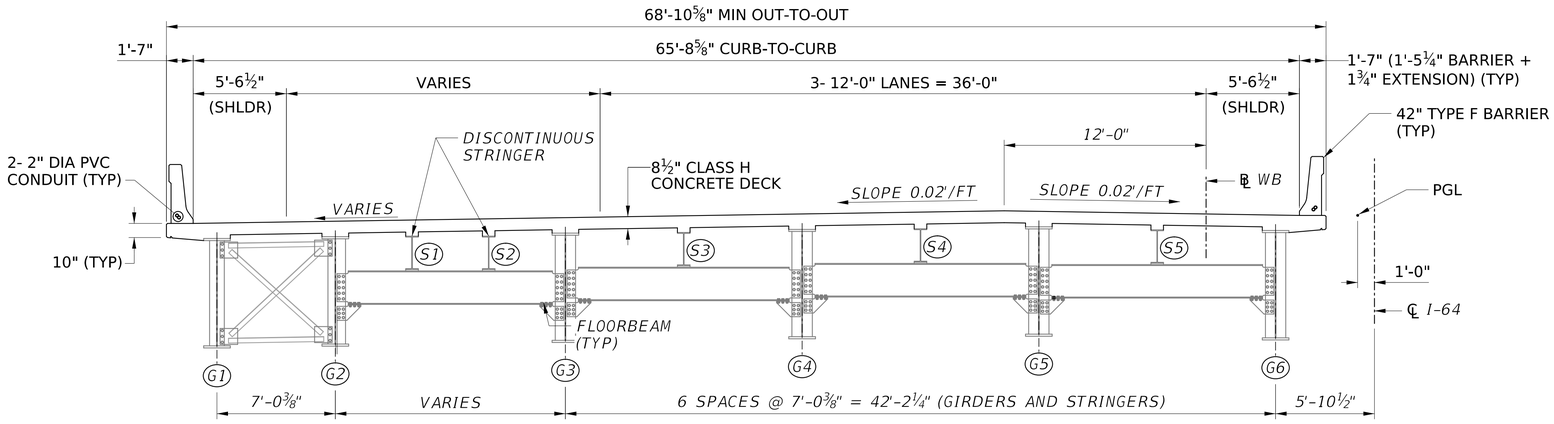

DECK SECTION W-W

NOTES:

1. FOR GENERAL NOTES, SEE SHEETS AND .
2. FOR DECK PLACEMENT NOTES, SEE SHEET .

NOT TO SCALE

NO.	REVISION	DATE	BY

WEST VIRGINIA DEPARTMENT OF TRANSPORTATION
DIVISION OF HIGHWAYS
ENGINEERING DIVISION

I-64 OVER KANAWHA RIVER
EUGENE A. CARTER MEMORIAL BRIDGE +3

DECK SECTION (WB)
SPAN 8 AND SPAN 9 (2 OF 2)

DESIGNED	DATE
KCO	08/25
DRAWN	
SCN	08/25
CHECKED	
REVIEWED	

HDR ENGINEERING INC.
CONSULTING ENGINEERS
CHARLESTON, WV
681-341-6100

SHEET OF

BRIDGE NO. 2563.6

SNOLEN $DD-MMM-YYYY HH:MM$ pw://pwhdruseas02.intranet.hdr:HDR_US_East_02/Documents/WV_DOT/WVDOT-Eugene_Carter_Bridge_3/6.0_CAD_BIM/6.2_WIP/HDR/6.2.2_Sheet_Files/23_Structure/4.060 Typical Secton Span 9 WB 01

PROJECT NUMBERS		DISTRICT	COUNTY	SHEET NO.	TOTAL
STATE	FEDERAL				
S320-64-57.44 00	NHPP-0064 (497)D	1	KANAWHA		

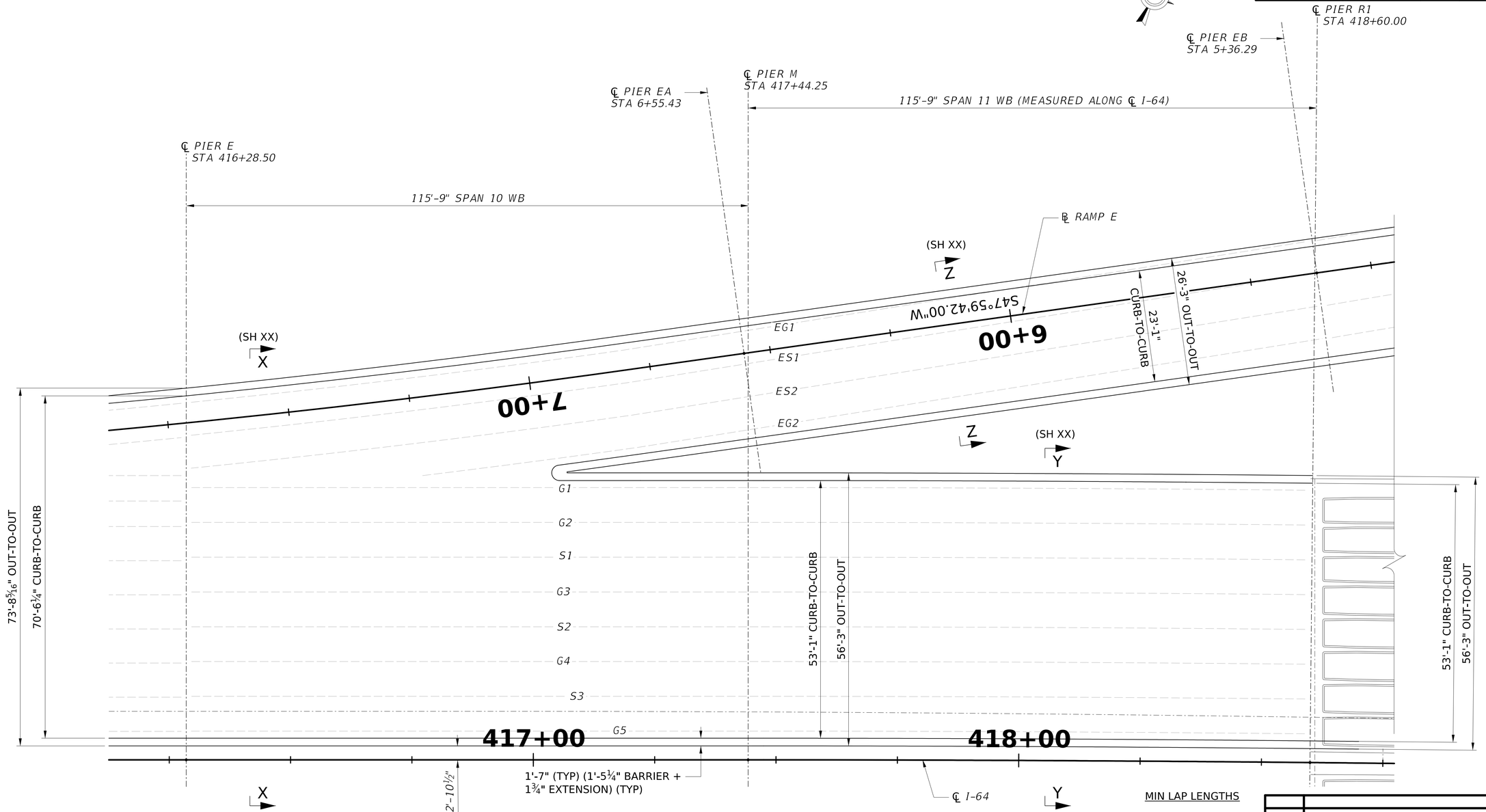

DECK PLACEMENT PLAN (WB)

(SPAN 10 AND SPAN 11)

SCALE : 2 0 4 8

3/32" = 1'-0"

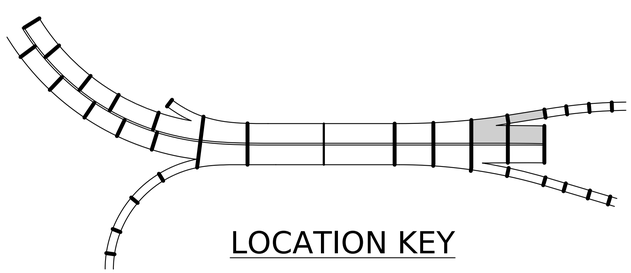

LOCATION KEY

MIN LAP LENGTHS

DECK BAR LAPS
#4 = 1'-7"
#5 = 2'-0"
#6 = 2'-5"

BARRIER BAR LAPS
#5 = 2'-7"
#7 = 3'-7"
#8 = 4'-1"

NOTES:

1. FOR GENERAL NOTES, SEE SHEETS THRU .
2. FOR DECK PLACEMENT NOTES, SEE SHEET .

NO.	REVISION	DATE	BY

WEST VIRGINIA DEPARTMENT OF TRANSPORTATION
DIVISION OF HIGHWAYS
ENGINEERING DIVISION

I-64 OVER KANAWHA RIVER
EUGENE A. CARTER MEMORIAL BRIDGE +3

DECK PLACEMENT PLAN (WB)
SPAN 10 AND SPAN 11

DESIGNED	DATE
KCO	10/25
DRAWN	
SCN	10/25
CHECKED	
REVIEWED	

HDR ENGINEERING INC.
CONSULTING ENGINEERS
CHARLESTON, WV
681-341-6100

SHEET OF

BRIDGE NO. 2563.6

pw://pwhdruseas02.intranet.hdr:HDR_US_East_02/Documents/WV_DOT/WVDOT-Eugene_Carter_Bridge_3/6.0_CAD_BIM/6.2_WIP/HDR/6.2.2_Sheet_Files/23_Structure/4.062 Deck Plan Spans 10-11 WB
$DD-MMM-YYYY HH:MM$
SNOLEN

PROJECT NUMBERS		DISTRICT	COUNTY	SHEET NO.	TOTAL
STATE	FEDERAL				
S320-64-57.44 00	NHPP-0064 (497)D	1	KANAWHA		

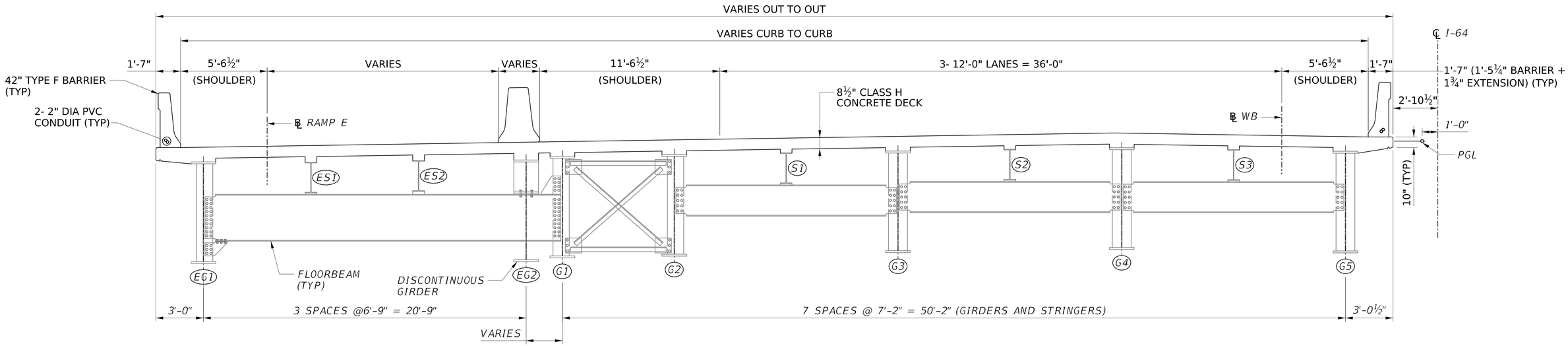

DECK SECTION X-X

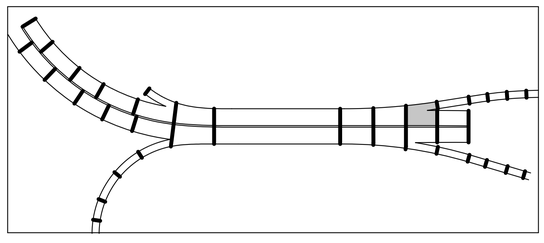

KEY PLAN

NOTES:

1. FOR GENERAL NOTES, SEE SHEETS AND .
2. FOR DECK PLACEMENT NOTES, SEE SHEET .

NO.	REVISION	DATE	BY

WEST VIRGINIA DEPARTMENT OF TRANSPORTATION
DIVISION OF HIGHWAYS
ENGINEERING DIVISION

I-64 OVER KANAWHA RIVER
EUGENE A. CARTER MEMORIAL BRIDGE +3
DECK SECTION (WB)
SPAN 10 AND SPAN 11 (1 OF 3)

DESIGNED	DATE
KCO	08/25
DRAWN	
SCN	08/25
CHECKED	
REVIEWED	

HDR ENGINEERING INC.
CONSULTING ENGINEERS
CHARLESTON, WV
681-341-6100

SHEET OF

BRIDGE NO. 2563.6

SNOLEN $DD-MMM-YYYY HH:MM$ pw://pwhdrusess02.intranet.hdr:HDR_US_East_02/Documents/WV_DOT/WVDOT-Eugene_Carter_Bridge_3/6.0_CAD_BIM/6.2_WIP/HDR/6.2.2_Sheet_Files/23_Structure/4.063 Typical Section Span 10 WB

PROJECT NUMBERS		DISTRICT	COUNTY	SHEET NO.	TOTAL
STATE	FEDERAL				
S320-64-57.44 00	NHPP-0064 (497)D	1	KANAWHA		

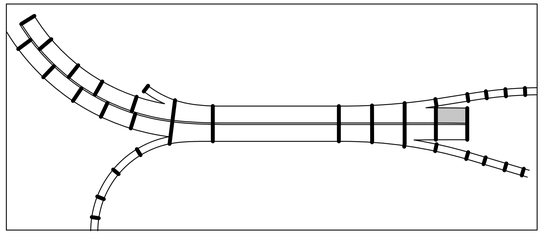

KEY PLAN

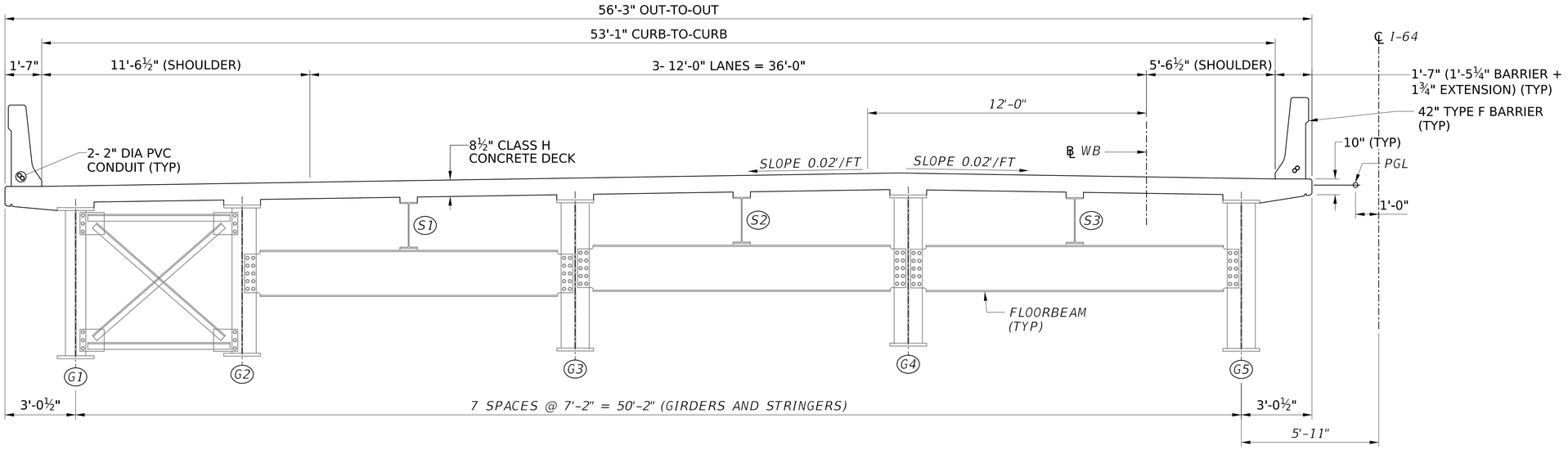

DECK SECTION Y-Y

NOTES:

1. FOR GENERAL NOTES, SEE SHEETS AND .
2. FOR DECK PLACEMENT NOTES, SEE SHEET .

SCALE : 1 0 1 2 3 ft.
⅜" = 1'-0"

NO.	REVISION	DATE	BY

WEST VIRGINIA DEPARTMENT OF TRANSPORTATION
DIVISION OF HIGHWAYS
ENGINEERING DIVISION

I-64 OVER KANAWHA RIVER
EUGENE A. CARTER MEMORIAL BRIDGE +3
DECK SECTION (WB)
SPAN 10 AND SPAN 11 (2 OF 3)

DESIGNED	DATE
KCO	08/25
DRAWN	
SCN	08/25
CHECKED	
REVIEWED	

HDR ENGINEERING INC.
CONSULTING ENGINEERS
CHARLESTON, WV
681-341-6100

SHEET OF
BRIDGE NO. 2563.6

SNOLEN $DD-MMM-YYYY HH:MM$ pw://pwhdruseas02.intranet.hdr:HDR_US_East_02/Documents/WV_DOT/WVDOT-Eugene_Carter_Bridge_3/6.0_CAD_BIM/6.2_WIP/HDR/6.2.2_Sheet_Files/23_Structure/4.064 Typical Section Span 11 WB

PROJECT NUMBERS		DISTRICT	COUNTY	SHEET NO.	TOTAL
STATE	FEDERAL				
S320-64-57.44 00	NHPP-0064 (497)D	1	KANAWHA		

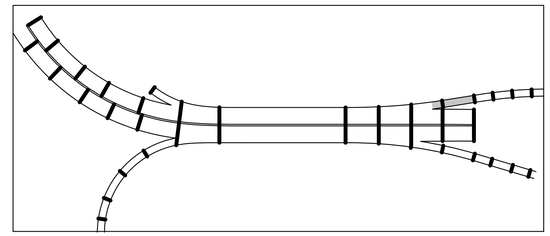

KEY PLAN

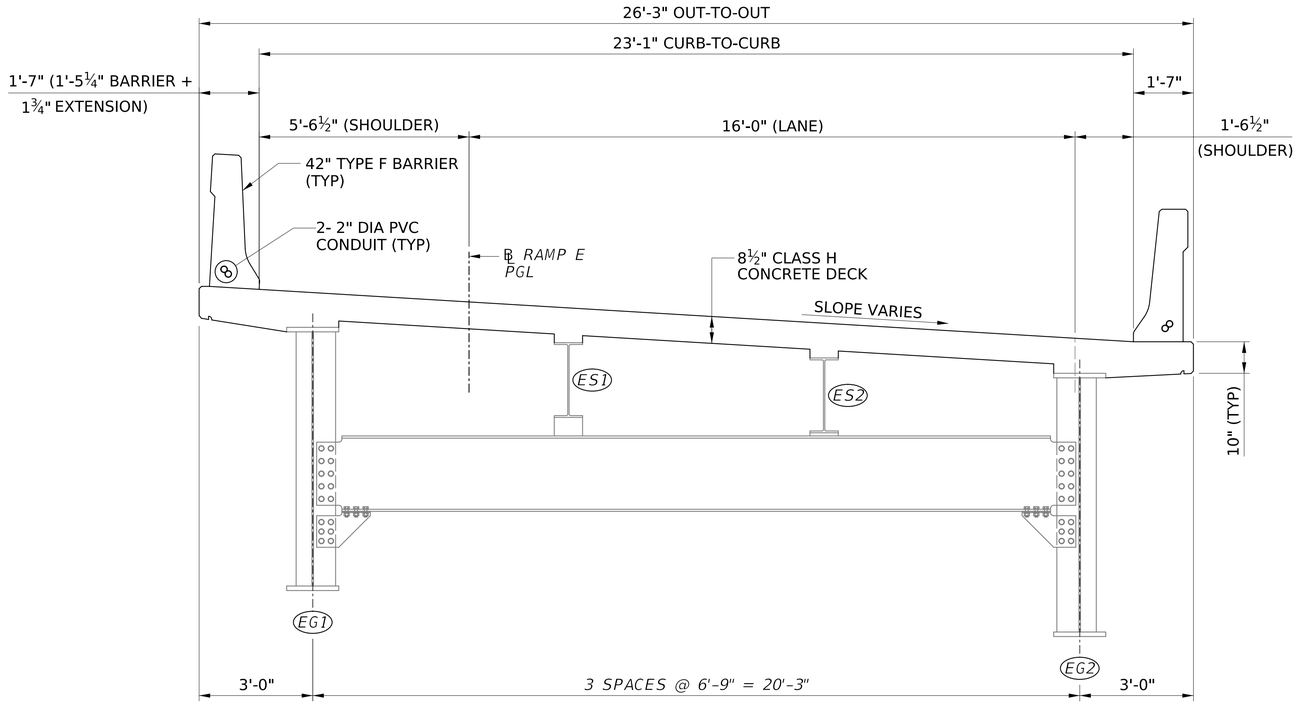

DECK SECTION Z-Z

NOTES:

1. FOR GENERAL NOTES, SEE SHEETS AND .
2. FOR DECK PLACEMENT NOTES, SEE SHEET .

NO.	REVISION	DATE	BY

WEST VIRGINIA DEPARTMENT OF TRANSPORTATION
DIVISION OF HIGHWAYS
ENGINEERING DIVISION

I-64 OVER KANAWHA RIVER
EUGENE A. CARTER MEMORIAL BRIDGE +3
DECK SECTION (WB)
SPAN 10 AND SPAN 11 (3 OF 3)

DESIGNED	DATE
KCO	08/25
DRAWN	
SCN	08/25
CHECKED	
REVIEWED	

SCALE : 1 0 1 2 ft.
½" = 1'-0"

HDR ENGINEERING INC.
CONSULTING ENGINEERS
CHARLESTON, WV
681-341-6100

SHEET OF
BRIDGE NO. 2563.6

SNOLEN $DD-MMM-YYYY HH:MM$ pw://pwhdruseas02.intranet.hdr:HDR_US_East_02/Documents/WV_DOT/WVDOT-Eugene_Carter_Bridge_3/6.0_CAD_BIM/6.2_WIP/HDR/6.2.2_Sheet_Files/23_Structure/4.065 Ramp E Typical Section RR

PROJECT NUMBERS		DISTRICT	COUNTY	SHEET NO.	TOTAL
STATE	FEDERAL				
S320-64-57.44 00	NHPP-0064 (497)D	1	KANAWHA		

DECK REINFORCING SCHEDULE WESTBOUND 1 OF 3
TO BE DEVELOPED WHEN DETAILS ARE COMPLETE

NO.	REVISION	DATE	BY

WEST VIRGINIA DEPARTMENT OF TRANSPORTATION
DIVISION OF HIGHWAYS
ENGINEERING DIVISION

I-64 OVER KANAWHA RIVER
EUGENE A. CARTER MEMORIAL BRIDGE +3

REINFORCING SCHEDULE
DECK MAINLINE WB (1 OF 3)

DESIGNED	DATE
KCO	12/25
DRAWN	
SCN	12/25
CHECKED	
REVIEWED	

HDR ENGINEERING INC.
CONSULTING ENGINEERS
CHARLESTON, WV
681-341-6100

SHEET OF

BRIDGE NO. 2563.6

SNOLEN $DD-MMM-YYYY HH:MM$ pw://pwhdrusess02.intranet.hdr:HDR_US_East_02/Documents/WV_DOT/WVDOT-Eugene_Carter_Bridge_3/6.0_CAD_BIM/6.2_WIP/HDR/6.2.2_Sheet_Files/23_Structure/4.066a Eastbound Deck Reinforcing.dgn

PROJECT NUMBERS		DISTRICT	COUNTY	SHEET NO.	TOTAL
STATE	FEDERAL				
S320-64-57.44 00	NHPP-0064 (497)D	1	KANAWHA		

DECK REINFORCING SCHEDULE WESTBOUND 2 OF 3
TO BE DEVELOPED WHEN DETAILS ARE COMPLETE

NO.	REVISION	DATE	BY

WEST VIRGINIA DEPARTMENT OF TRANSPORTATION
DIVISION OF HIGHWAYS
ENGINEERING DIVISION

I-64 OVER KANAWHA RIVER
EUGENE A. CARTER MEMORIAL BRIDGE +3

REINFORCING SCHEDULE
DECK MAINLINE WB (2 OF 3)

DESIGNED	DATE
KCO	12/25
DRAWN	
SCN	12/25
CHECKED	
REVIEWED	

HDR ENGINEERING INC.
CONSULTING ENGINEERS
CHARLESTON, WV
681-341-6100

SHEET OF

BRIDGE NO. 2563.6

SNOLEN $DD-MMM-YYYY HH:MM$ pw://pwhdrusess02.intranet.hdr:HDR_US_East_02/Documents/WV_DOT/WVDOT-Eugene_Carter_Bridge_3/6.0_CAD_BIM/6.2_WIP/HDR/6.2.2_Sheet_Files/23_Structure/4.066b Eastbound Deck Reinforcing.dgn

PROJECT NUMBERS		DISTRICT	COUNTY	SHEET NO.	TOTAL
STATE	FEDERAL				
S320-64-57.44 00	NHPP-0064 (497)D	1	KANAWHA		

DECK REINFORCING SCHEDULE WESTBOUND 3 OF 3
TO BE DEVELOPED WHEN DETAILS ARE COMPLETE

NO.	REVISION	DATE	BY

WEST VIRGINIA DEPARTMENT OF TRANSPORTATION
DIVISION OF HIGHWAYS
ENGINEERING DIVISION

I-64 OVER KANAWHA RIVER
EUGENE A. CARTER MEMORIAL BRIDGE +3

REINFORCING SCHEDULE
DECK MAINLINE WB (3 OF 3)

DESIGNED	DATE
KCO	12/25
DRAWN	
SCN	12/25
CHECKED	
REVIEWED	

HDR ENGINEERING INC.
CONSULTING ENGINEERS
CHARLESTON, WV
681-341-6100

SHEET OF

BRIDGE NO. 2563.6

SNOLEN $DD-MMM-YYYY HH:MM$ pw://pwhdruseas02.intranet.hdr:HDR_US_East_02/Documents/WV_DOT/WVDOT-Eugene_Carter_Bridge_3/6.0_CAD_BIM/6.2_WIP/HDR/6.2.2_Sheet_Files/23_Structure/4.066c Eastbound Deck Reinforcing.dgn

PROJECT NUMBERS		DISTRICT	COUNTY	SHEET NO.	TOTAL
STATE	FEDERAL				
S320-64-57.44 00	NHPP-0064 (497)D	1	KANAWHA		

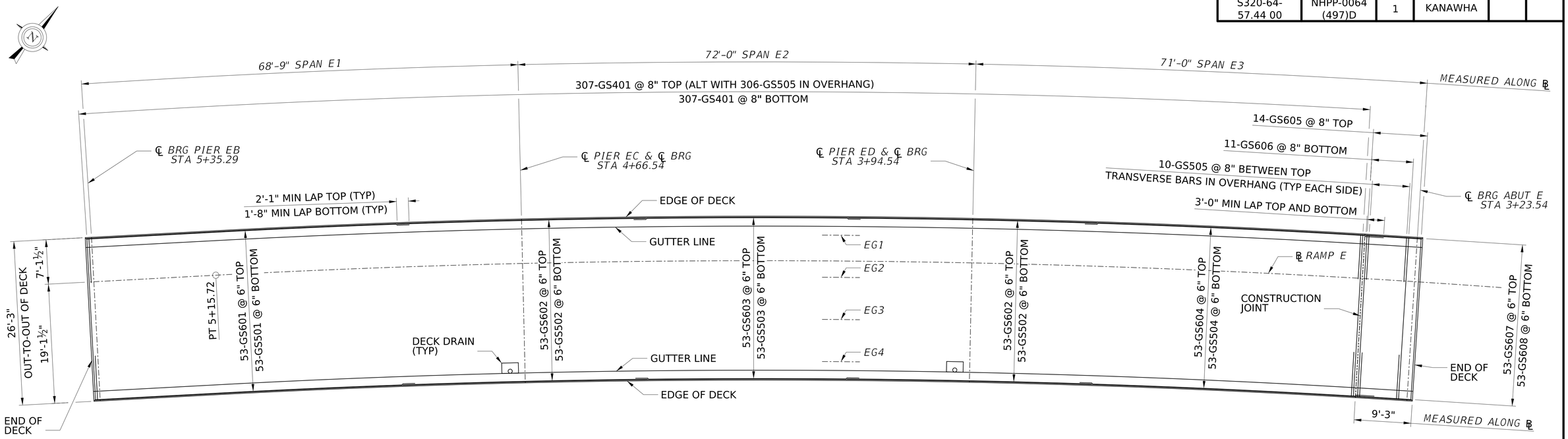

PLAN

NOTES:

1. FOR GENERAL NOTES, SEE SHEETS X THRU X.
2. FOR TYPICAL DECK SECTION, SEE SHEET X.
3. ALL REINFORCING STEEL IN THE DECK AND BARRIERS SHALL BE GALVANIZED.
4. FOR DECK AND BARRIER REINFORCEMENT SCHEDULE, SEE SHEET XX.
5. FOR FINISHED DECK ELEVATIONS, SEE SHEETS XX AND XX.
6. ALL BAR SPACINGS SHOWN ARE MAXIMUM SPACING.
7. FOR SCUPPER DETAILS, SEE SHEETS XX AND XX.
8. FOR ADDITIONAL REINFORCEMENT AT SCUPPERS, SEE SHEET XX.
9. FOR DECK QUANTITIES, SEE SHEET XX.
10. CONCRETE IN A PRECEDING PLACEMENT MUST OBTAIN A COMPRESSIVE STRENGTH OF 3000 PSI BEFORE CONCRETE MAY BE PLACED IN A SUCCEEDING ADJACENT PLACEMENT.
11. NO CONSTRUCTION EQUIPMENT WITH AN AXLE LOAD GREATER THAN 20,000 POUNDS SHALL BE PERMITTED ON THE SLAB AT ANY TIME.
12. NO CONSTRUCTION EQUIPMENT OR LOADS THAT ARE NOT REQUIRED TO COMPLETE THE SLAB, BARRIERS OR OTHER APPURTENANCES SHALL BE ALLOWED ON THE BRIDGE DECK.
13. MOVEMENT OF FINISHING MACHINE AS REQUIRED DURING DECK PLACEMENT OPERATION IS PERMISSIBLE.
14. EXTEND LONGITUDINAL REINFORCEMENT BEYOND CONSTRUCTION JOINT BY A MINIMUM OF A LAP LENGTH.

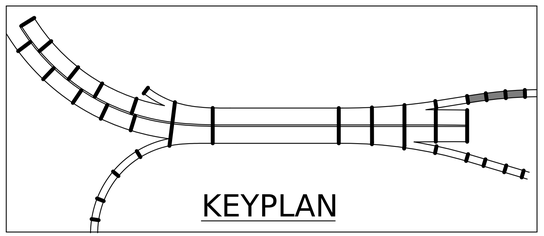

SCUPPER & JUNCTION BOX LOCATIONS		
ITEM	STATION	OFFSET
JUNCTION BOX	X	X
SCUPPER	X	X
SCUPPER	X	X

LEGEND:

(#) - INDICATES POUR SEQUENCE NUMBER

** - FOR LOCATION OF BOTTOM LONGITUDINAL REINFORCEMENT, SEE TYPICAL DECK SECTION.

MIN LAP LENGTHS:

DECK BAR LAPS
#4 = 1'-4"
#5 = 1'-8"
#6 = 2'-1"

BARRIER BAR LAPS
#4 = 1'-8"
#5 = 2'-1
#7 = 3'-6"
#8 = 4'-6"

2 0 4 8 ft.
⅛" = 1'-0"

NO.	REVISION	DATE	BY

WEST VIRGINIA DEPARTMENT OF TRANSPORTATION
DIVISION OF HIGHWAYS
ENGINEERING DIVISION

I-64 OVER KANAWHA RIVER
EUGENE A. CARTER MEMORIAL BRIDGE +3
DECK PLACEMENT PLAN
RAMP E

DESIGNED	DATE
MLH	12/25
DRAWN	
DJC	12/25
CHECKED	
REVIEWED	

Mead & Hunt

MEAD & HUNT INC.
CONSULTING ENGINEERS
CHARLESTON, WV
304-345-6712

SHEET OF
BRIDGE NO. 2563.6

1420djc $DD-MMM-YYYY HH:MM$ X:\32416000\25191.01\TECH\Structures\Ramp E\sheets\str_slb_001_Ramp E_Eugene Carter Memorial Bridge.dgn

PROJECT NUMBERS		DISTRICT	COUNTY	SHEET NO.	TOTAL
STATE	FEDERAL				
S320-64-57.44 00	NHPP-0064 (497)D	1	KANAWHA		

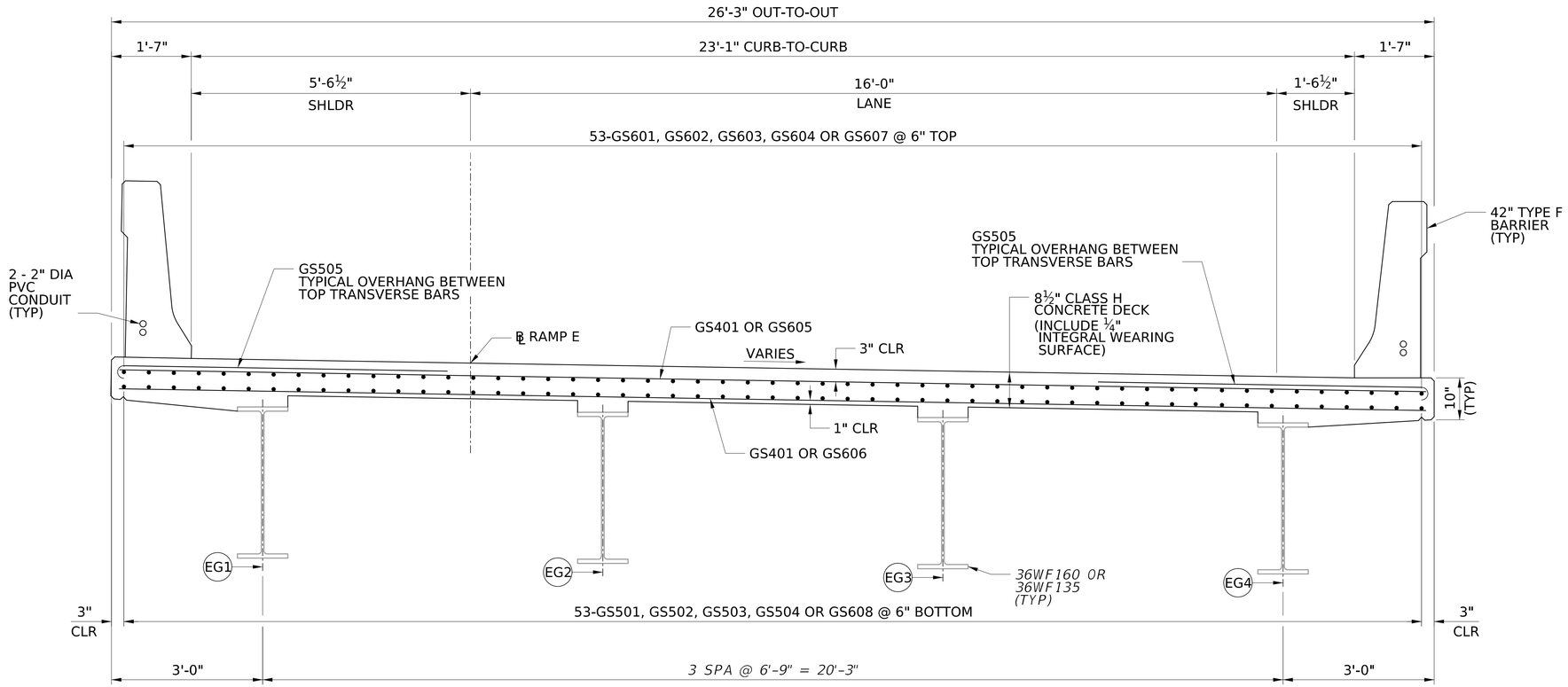

TYPICAL DECK SECTION

(LOOKING BACK STATION)

DECK AND BARRIER QUANTITIES

ITEM NO	DESCRIPTION	UNIT	QUANTITY
601003-001	CLASS K CONCRETE	CY	X
601009-001	CLASS H CONCRETE	CY	X
601019-001	CONCRETE PROTECTIVE COATING, C3	SF	X
602002-003	GALVANIZED REINFORCING STEEL	LB	X
662003-001	POLYVINYLCHLORIDE CONDUIT, 2 INCH DIAMETER, SCHEDULE 40	LS	X
662006-001	JUNCTION BOX, TYPE A	EA	X
662006-001	JUNCTION BOX, TYPE B	EA	X
	INCIDENTAL QUANTITY INFORMATION		
	PERMANENT METAL DECK FORMS		

NOTES:

1. FOR GENERAL NOTES, SEE SHEET XX THRU XX.
2. FOR DECK PAVING PLAN AND TRANSVERSE REINFORCING IN END ZONE, SEE SHEET XX.
3. FOR TYPICAL DECK DETAILS, SEE SHEETS XX THRU XX.
4. FOR REINFORCEMENT BAR SCHEDULE, SEE SHEET XX.
5. CONSTRUCT HIGH SIDE BARRIER PERPENDICULAR TO THE DECK AND THE LOW SIDE BARRIER PLUMB.

12 0 12 in.

¾" = 1'-0"

NO.	REVISION	DATE	BY

WEST VIRGINIA DEPARTMENT OF TRANSPORTATION
DIVISION OF HIGHWAYS
ENGINEERING DIVISION

I-64 OVER KANAWHA RIVER
EUGENE A. CARTER MEMORIAL BRIDGE +3

DECK SECTION
RAMP E

DESIGNED	DATE
MLH	12/25
DRAWN	
DJC	12/25
CHECKED	
REVIEWED	

Mead & Hunt

MEAD & HUNT INC.
CONSULTING ENGINEERS
CHARLESTON, WV
304-345-6712

SHEET OF

BRIDGE NO. 2563.6

1420djc $DD-MMM-YYYY HH:MM$ X:\324160025191 1.01\TECH\Structures\Ramp E\sheets\str_slb_003_Ramp E_Eugene Carter Memorial Bridge.dgn

PROJECT NUMBERS		DISTRICT	COUNTY	SHEET NO.	TOTAL
STATE	FEDERAL				
S320-64-57.44 00	NHPP-0064 (497)D	1	KANAWHA		

DECK AND BARRIER REINFORCEMENT SCHEDULE

MARK	SIZE	LENGTH	NO	WEIGHT	TYPE	A	B	C	D	E	F	G	H	J	K	R	REMARKS
TOTAL REINFORCING			X	LBS													

REINFORCEMENT BAR NOTES:

1. FOR GENERAL NOTES, SEE SHEETS X THRU X.
2. REINFORCING BARS SHALL BE IN ACCORDANCE WITH SECTION 602 OF THE STANDARD SPECIFICATIONS.
3. BENDING OF REINFORCING BARS SHALL BE IN ACCORDANCE WITH SECTION 602.5. RAIL-STEEL BARS SHALL NOT BE FILLED BENT OR STRAIGHTENED.
4. REINFORCING BAR SCHEDULE IS FOR INFORMATION ONLY. VERIFY SCHEDULE PRIOR TO BIDDING AND FABRICATION.
5. NO CORRECTION IN LENGTH FOR BEND CURVATURES IS TO BE MADE.
6. ALL DIMENSIONS ARE OUT-TO-OUT OF BAR EXCEPT "A" AND "G" ON STANDARD 135° AND 180° HOOKS, AND "R" WHICH IS SHOWN TO THE INSIDE OF THE BAR.
7. IN NOT SHOWN, "J" DIMENSIONS ON 180° HOOKS ARE STANDARD HOOKS.
8. NUMBERS IN CIRCLES INDICATE BAR TYPE.
9. UNLESS NOTED OTHERWISE, REINFORCING BARS SHALL BE AASHTO M31 GRADE 60 AND SHALL BE CONTINUOUS HOT-DIP GALVANIZED IN ACCORDANCE WITH ASTM A1094 OR ASTM A767, PAYABLE UNDER ITEM 602002-003 "GALVANIZED REINFORCING STEEL".

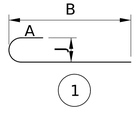

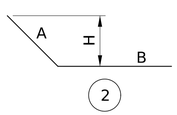

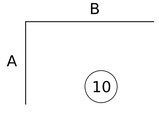

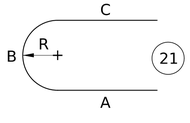

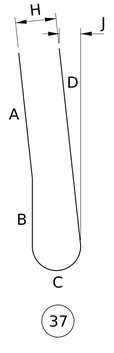

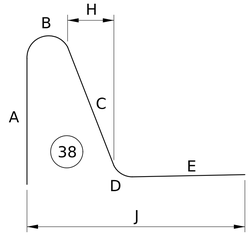

NO.	REVISION	DATE	BY

WEST VIRGINIA DEPARTMENT OF TRANSPORTATION
DIVISION OF HIGHWAYS
ENGINEERING DIVISION

I-64 OVER KANAWHA RIVER
EUGENE A. CARTER MEMORIAL BRIDGE +3

REINFORCMENT SCHEDULE
RAMP E

DESIGNED	DATE
MLH	12/25
DRAWN	
DJC	12/25
CHECKED	
REVIEWED	

Mead & Hunt

MEAD & HUNT INC.
CONSULTING ENGINEERS
CHARLESTON, WV
304-345-6712

SHEET OF

BRIDGE NO. 2563.6

X:\324160\025191.01\TECH\Structures\Ramp E\sheets\str_slb_002_Ramp E_Eugene Carter Memorial Bridge.dgn
$DD-MMM-YYYY HH:MM$
1420djc

PROJECT NUMBERS		DISTRICT	COUNTY	SHEET NO.	TOTAL
STATE	FEDERAL				
S320-64-57.44 00	NHPP-0064 (497)D	1	KANAWHA		

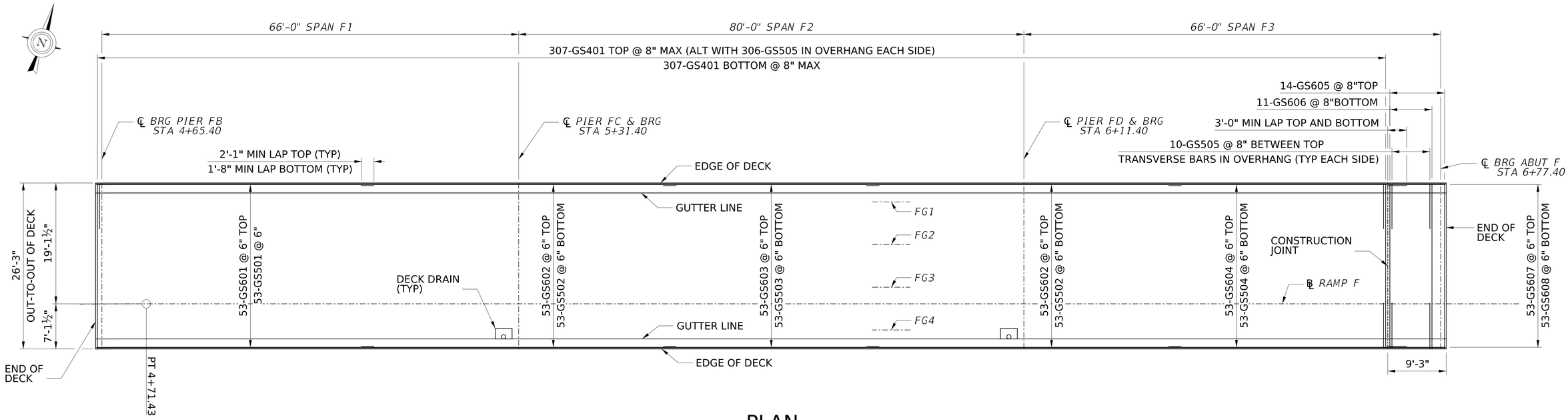

PLAN

NOTES:

1. FOR GENERAL NOTES, SEE SHEETS X THRU X.
2. FOR TYPICAL DECK SECTION, SEE SHEET X.
3. ALL REINFORCING STEEL IN THE DECK AND BARRIERS SHALL BE GALVANIZED.
4. FOR DECK AND BARRIER REINFORCEMENT SCHEDULE, SEE SHEET XX.
5. FOR FINISHED DECK ELEVATIONS, SEE SHEETS XX AND XX.
6. ALL BAR SPACINGS SHOWN ARE MAXIMUM SPACING.
7. FOR SCUPPER DETAILS, SEE SHEETS XX AND XX.
8. FOR ADDITIONAL REINFORCEMENT AT SCUPPERS, SEE SHEET XX.
9. FOR DECK QUANTITIES, SEE SHEET XX.
10. CONCRETE IN A PRECEDING PLACEMENT MUST OBTAIN A COMPRESSIVE STRENGTH OF 3000 PSI BEFORE CONCRETE MAY BE PLACED IN A SUCCEEDING ADJACENT PLACEMENT.
11. NO CONSTRUCTION EQUIPMENT WITH AN AXLE LOAD GREATER THAN 20,000 POUNDS SHALL BE PERMITTED ON THE SLAB AT ANY TIME.
12. NO CONSTRUCTION EQUIPMENT OR LOADS THAT ARE NOT REQUIRED TO COMPLETE THE SLAB, BARRIERS OR OTHER APPURTENANCES SHALL BE ALLOWED ON THE BRIDGE DECK.
13. MOVEMENT OF FINISHING MACHINE AS REQUIRED DURING DECK PLACEMENT OPERATION IS PERMISSIBLE.
14. EXTEND LONGITUDINAL REINFORCEMENT BEYOND CONSTRUCTION JOINT BY A MINIMUM OF A LAP LENGTH.

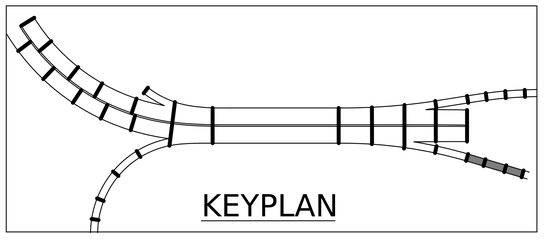

SCUPPER & JUNCTION BOX LOCATIONS		
ITEM	STATION	OFFSET
JUNCTION BOX	X	X
SCUPPER	X	X
SCUPPER	X	X

LEGEND:

(#) - INDICATES POUR SEQUENCE NUMBER

** - FOR LOCATION OF BOTTOM LONGITUDINAL REINFORCEMENT, SEE TYPICAL DECK SECTION.

MIN LAP LENGTHS:

DECK BAR LAPS
#4 = 1'-4"
#5 = 1'-8"
#6 = 2'-1"

BARRIER BAR LAPS
#4 = 1'-8"
#5 = 2'-1"
#7 = 3'-6"
#8 = 4'-6"

2 0 4 8 ft.
⅛" = 1'-0"

NO.	REVISION	DATE	BY

WEST VIRGINIA DEPARTMENT OF TRANSPORTATION
DIVISION OF HIGHWAYS
ENGINEERING DIVISION

I-64 OVER KANAWHA RIVER
EUGENE A. CARTER MEMORIAL BRIDGE +3
DECK PLACEMENT PLAN
RAMP F

DESIGNED	DATE
MLH	12/25
DRAWN	
DJC	12/25
CHECKED	
REVIEWED	

Mead & Hunt

MEAD & HUNT INC.
CONSULTING ENGINEERS
CHARLESTON, WV
304-345-6712

SHEET OF
BRIDGE NO. 2563.6

1420djc $DD-MMM-YYYY HH:MM$ X:\32416000\25191.01\TECH\Structures\Ramp F\sheets\str_slb_001_Ramp F_Eugene Carter Memorial Bridge.dgn

PROJECT NUMBERS		DISTRICT	COUNTY	SHEET NO.	TOTAL
STATE	FEDERAL				
S320-64-57.44 00	NHPP-0064 (497)D	1	KANAWHA		

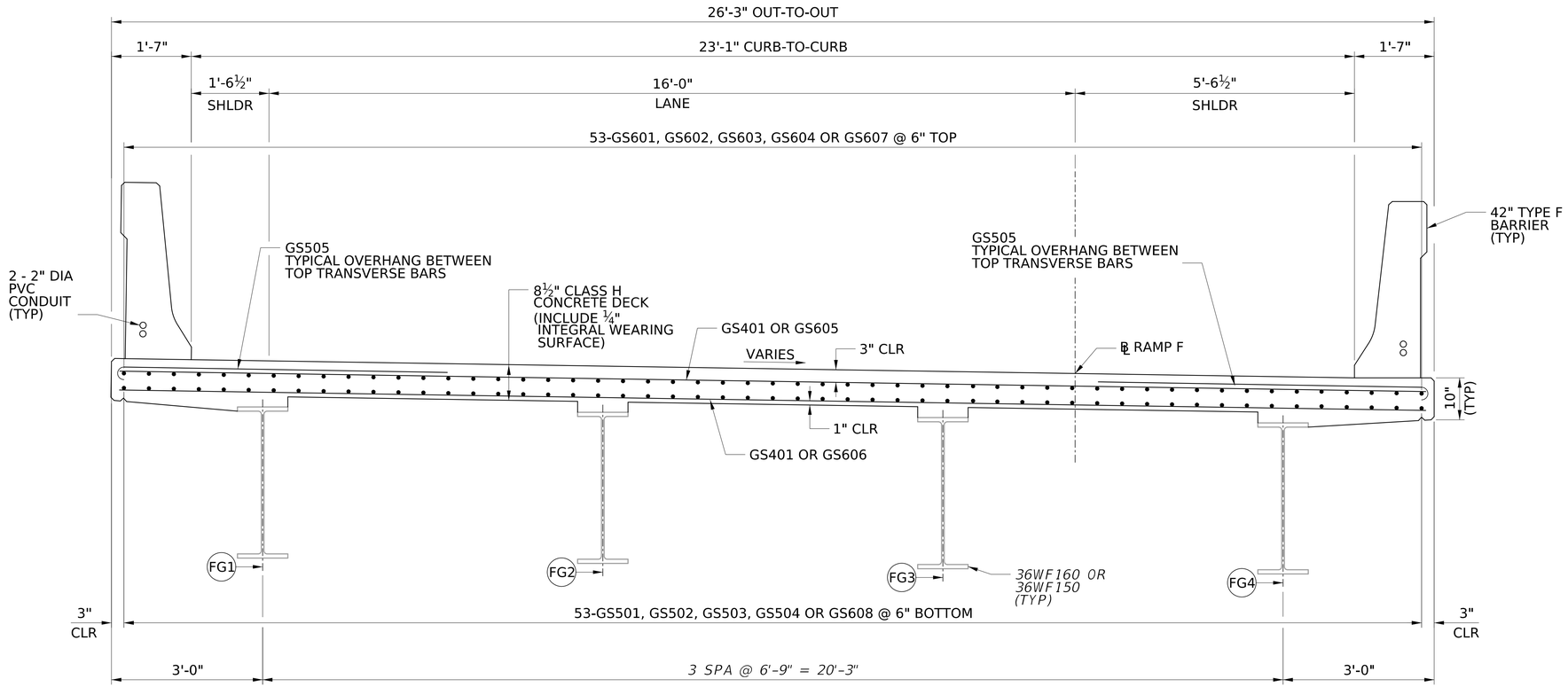

TYPICAL DECK SECTION

(LOOKING AHEAD STATION)

12 0 12 in.

¾" = 1'-0"

DECK AND BARRIER QUANTITIES

ITEM NO	DESCRIPTION	UNIT	QUANTITY
601003-001	CLASS K CONCRETE	CY	X
601009-001	CLASS H CONCRETE	CY	X
601019-001	CONCRETE PROTECTIVE COATING, C3	SF	X
602002-003	GALVANIZED REINFORCING STEEL	LB	X
662003-001	POLYVINYLCHLORIDE CONDUIT, 2 INCH DIAMETER, SCHEDULE 40	LS	X
662006-001	JUNCTION BOX, TYPE A	EA	X
662006-001	JUNCTION BOX, TYPE B	EA	X
	INCIDENTAL QUANTITY INFORMATION		
	PERMANENT METAL DECK FORMS		

NOTES:

1. FOR GENERAL NOTES, SEE SHEET XX THRU XX.
2. FOR DECK PAVING PLAN AND TRANSVERSE REINFORCING IN END ZONE, SEE SHEET XX.
3. FOR TYPICAL DECK DETAILS, SEE SHEETS XX THRU XX.
4. FOR REINFORCEMENT BAR SCHEDULE, SEE SHEET XX.
5. CONSTRUCT HIGH SIDE BARRIER PERPENDICULAR TO THE DECK AND THE LOW SIDE BARRIER PLUMB.

NO.	REVISION	DATE	BY

WEST VIRGINIA DEPARTMENT OF TRANSPORTATION
DIVISION OF HIGHWAYS
ENGINEERING DIVISION

I-64 OVER KANAWHA RIVER
EUGENE A. CARTER MEMORIAL BRIDGE +3

DECK SECTION
RAMP F

DESIGNED	MLH	DATE	12/25
DRAWN	DJC		12/25
CHECKED			
REVIEWED			

Mead & Hunt

MEAD & HUNT INC.
CONSULTING ENGINEERS
CHARLESTON, WV
304-345-6712

SHEET OF

BRIDGE NO. 2563.6

1420djc $DD-MMM-YYYY HH:MM$ X:\324160025191 1.01\TECH\Structures\Ramp F\sheets\str_slb_003_Ramp F_Eugene Carter Memorial Bridge.dgn

PROJECT NUMBERS		DISTRICT	COUNTY	SHEET NO.	TOTAL
STATE	FEDERAL				
S320-64-57.44 00	NHPP-0064 (497)D	1	KANAWHA		

DECK AND BARRIER REINFORCEMENT SCHEDULE

MARK	SIZE	LENGTH	NO	WEIGHT	TYPE	A	B	C	D	E	F	G	H	J	K	R	REMARKS
TOTAL REINFORCING			X	LBS													

REINFORCEMENT BAR NOTES:

1. FOR GENERAL NOTES, SEE SHEETS X THRU X.
2. REINFORCING BARS SHALL BE IN ACCORDANCE WITH SECTION 602 OF THE STANDARD SPECIFICATIONS.
3. BENDING OF REINFORCING BARS SHALL BE IN ACCORDANCE WITH SECTION 602.5. RAIL-STEEL BARS SHALL NOT BE FILLED BENT OR STRAIGHTENED.
4. REINFORCING BAR SCHEDULE IS FOR INFORMATION ONLY. VERIFY SCHEDULE PRIOR TO BIDDING AND FABRICATION.
5. NO CORRECTION IN LENGTH FOR BEND CURVATURES IS TO BE MADE.
6. ALL DIMENSIONS ARE OUT-TO-OUT OF BAR EXCEPT "A" AND "G" ON STANDARD 135° AND 180° HOOKS, AND "R" WHICH IS SHOWN TO THE INSIDE OF THE BAR.
7. IN NOT SHOWN, "J" DIMENSIONS ON 180° HOOKS ARE STANDARD HOOKS.
8. NUMBERS IN CIRCLES INDICATE BAR TYPE.
9. UNLESS NOTED OTHERWISE, REINFORCING BARS SHALL BE AASHTO M31 GRADE 60 AND SHALL BE CONTINUOUS HOT-DIP GALVANIZED IN ACCORDANCE WITH ASTM A1094 OR ASTM A767, PAYABLE UNDER ITEM 602002-003 "GALVANIZED REINFORCING STEEL".

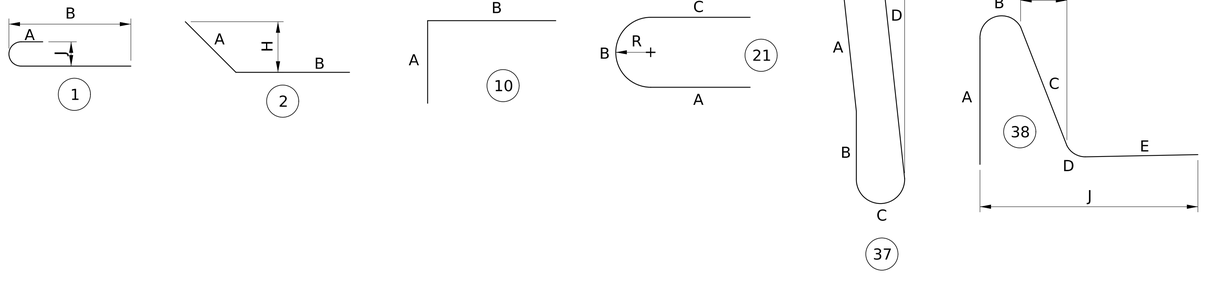

NO.	REVISION	DATE	BY

WEST VIRGINIA DEPARTMENT OF TRANSPORTATION
DIVISION OF HIGHWAYS
ENGINEERING DIVISION

I-64 OVER KANAWHA RIVER
EUGENE A. CARTER MEMORIAL BRIDGE +3

REINFORCMENT SCHEDULE
RAMP F

DESIGNED	DATE
MLH	12/25
DRAWN	
DJC	12/25
CHECKED	
REVIEWED	

Mead & Hunt

MEAD & HUNT INC.
CONSULTING ENGINEERS
CHARLESTON, WV
304-345-6712

SHEET OF

BRIDGE NO. 2563.6

X:\324160\025191.01\TECH\Structures\Ramp F\sheets\str_slb_002_Ramp F_Eugene Carter Memorial Bridge.dgn
$DD-MMM-YYYY HH:MM$
1420djc

PROJECT NUMBERS		DISTRICT	COUNTY	SHEET NO.	TOTAL
STATE	FEDERAL				
S320-64-57.44 00	NHPP-0064 (497)D	1	KANAWHA		

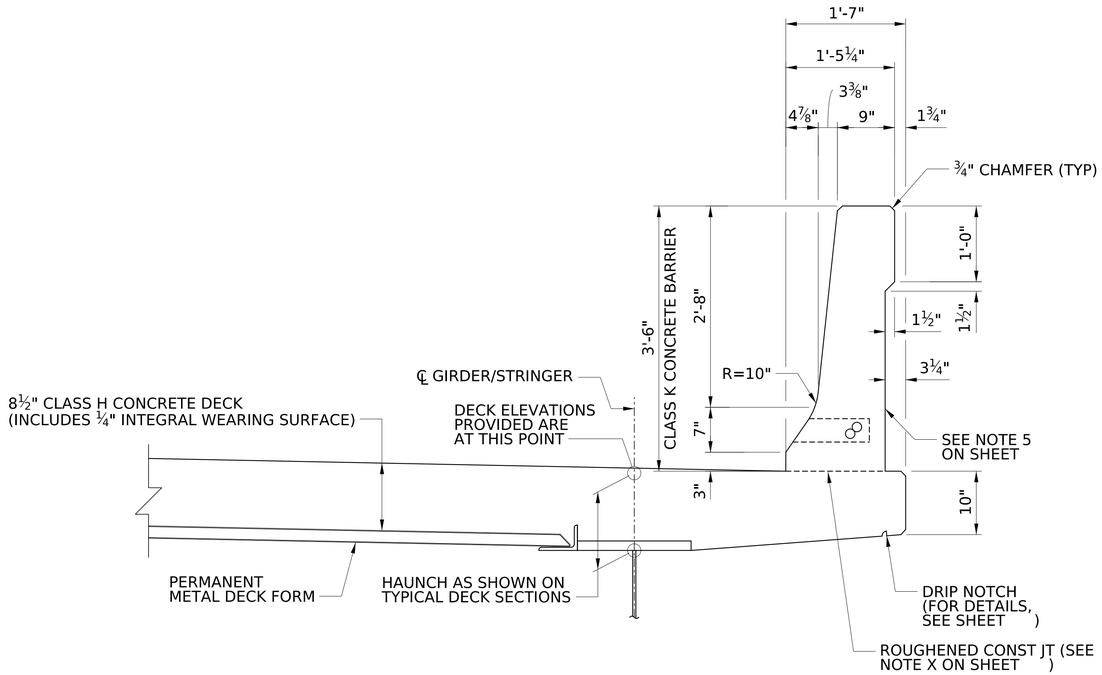

TYPE F CONCRETE BARRIER

SCALE : 6 0 6 12 in.

1" = 1'-0"

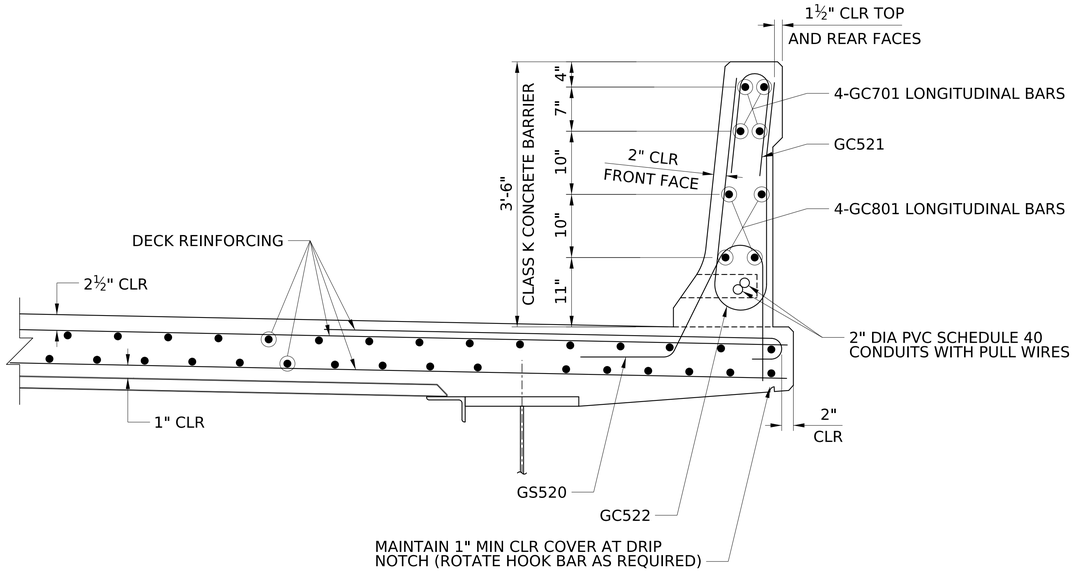

TYPE F CONCRETE BARRIER REINFORCING

(FOR DECK REINFORCING, SEE DECK PLACEMENT PLANS AND TYPICAL DECK SECTIONS)

SCALE : 6 0 6 12 in.

1" = 1'-0"

NOTES:

1. FOR GENERAL NOTES, SEE SHEETS THRU .
2. FOR DECK PLACEMENT PLANS, SEE SHEETS THRU .
3. FOR TYPICAL DECK SECTIONS, SEE SHEETS THRU .
4. FOR REINFORCING BAR SCHEDULES, SEE SHEETS THRU .
5. BARRIER AND REQUIRED REINFORCING STEEL SHALL BE CONSTRUCTED AS FOLLOWS:
   LOW SIDE BARRIER - PLUMB
   HIGH SIDE BARRIER - PERPENDICULAR TO DECK
6. ROUGHENED CONSTRUCTION JOINT BELOW BARRIERS AND COMBINATION RAILING SHALL BE LEVEL.
7. BEND HORIZONTAL LEG IN GS520 OR GS421 TO MATCH DECK CROSS SLOPE AS REQUIRED.
8. PROVIDE CONDUIT DEFLECTION/EXPANSION JOINT FITTING WHERE INDICATED ON, AND IN ACCORDANCE WITH STANDARD SHEET TEL-31.
9. BARRIER WEIGHT IS APPROXIMATELY 500 LB/FT.

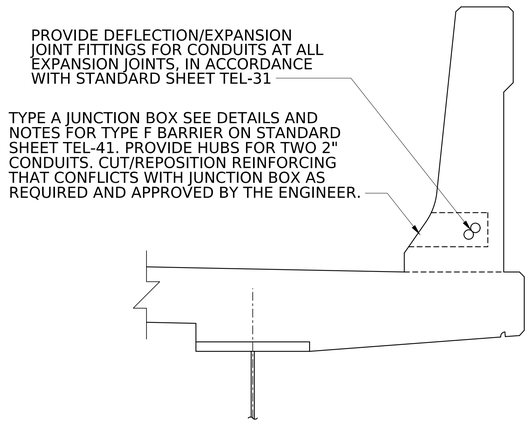

TYPE F BARRIER JUNCTION BOX - TYPE A

SCALE : 6 0 6 12 in.

1" = 1'-0"

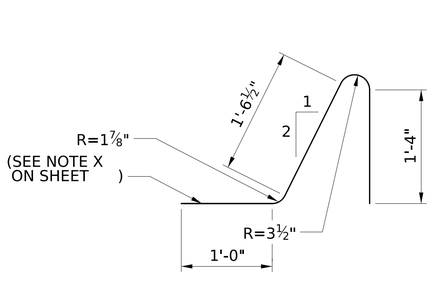

NUMBERS IN CIRCLES INDICATE BAR TYPE (TYP) (38)

GS520

NOT TO SCALE
BAR LENGTH =4'-11"

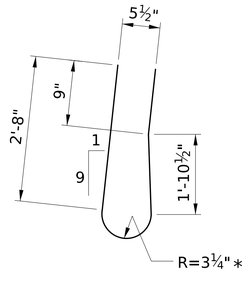

(37)

GC522

NOT TO SCALE
BAR LENGTH =6'-3"

∗ INSIDE RADIUS

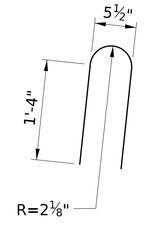

(21)

GC521

NOT TO SCALE
BAR LENGTH =3'-3¾"

NOTES:

1. FOR ADDITIONAL NOTES, SEE SHEET .

NO.	REVISION	DATE	BY

WEST VIRGINIA DEPARTMENT OF TRANSPORTATION
DIVISION OF HIGHWAYS
ENGINEERING DIVISION

I-64 OVER KANAWHA RIVER
EUGENE A. CARTER MEMORIAL BRIDGE +3

TYPICAL DECK DETAILS (1 OF 5)

DESIGNED	DATE
KCO	09/25
DRAWN	
SCN	09/25
CHECKED	
REVIEWED	

HDR ENGINEERING INC.
CONSULTING ENGINEERS
CHARLESTON, WV
681-341-6100

SHEET OF

BRIDGE NO. 2563.6

SNOLEN $DD-MMM-YYYY HH:MM$ pw://pwhdruseas02.Intranet.hdr:HDR_US_East_02/Documents/WV_DOT/WVDOT-Eugene_Carter_Bridge_3/6.0_CAD_BIM/6.2_WIP/HDR/6.2.2_Sheet_Files/23_Structure/4.081 Typ Deck Dets_01.dgn

PROJECT NUMBERS		DISTRICT	COUNTY	SHEET NO.	TOTAL
STATE	FEDERAL				
S320-64-57.44 00	NHPP-0064 (497)D	1	KANAWHA		

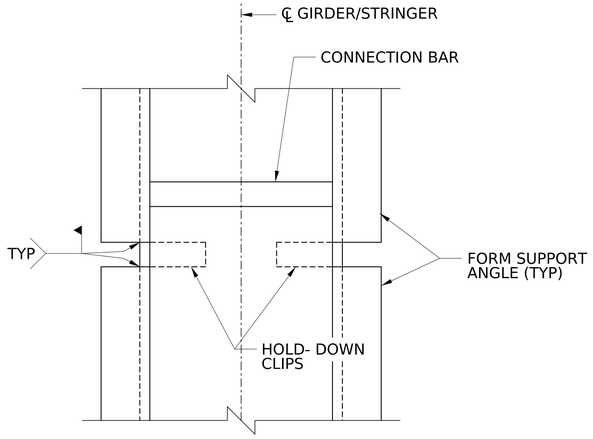

STEEL GIRDER PLAN

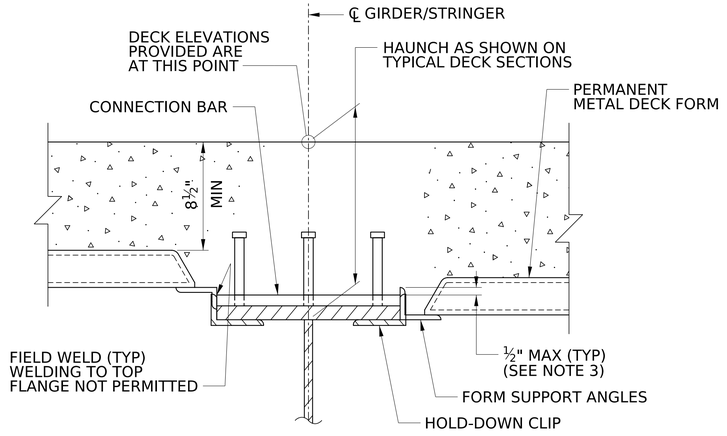

STEEL GIRDER ELEVATION

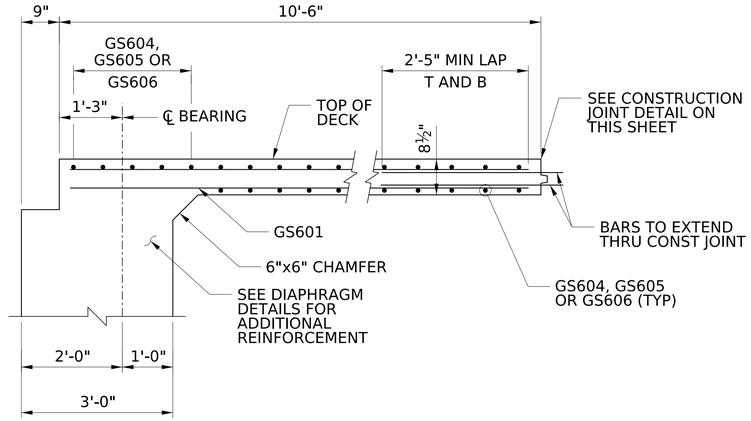

END ZONE LAYOUT

(SEMI-INTEGRAL ABUTMENT)

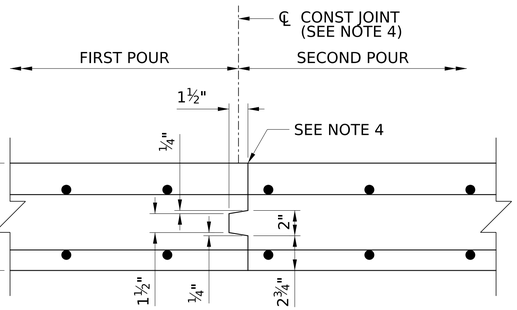

CONSTRUCTION JOINT DETAIL

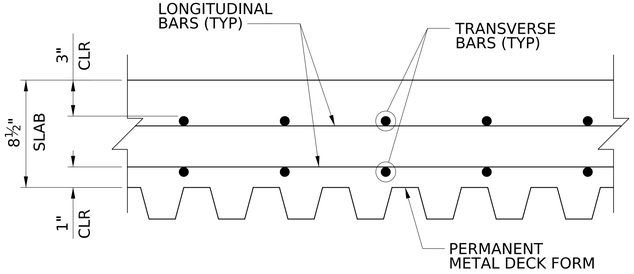

PERMANENT METAL DECK FORM DETAIL

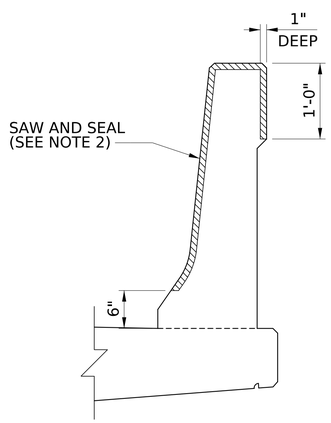

DEFLECTION JOINT DETAIL

SPACE AS SHOWN ON DECK PLACEMENT PLAN, SHEET XX

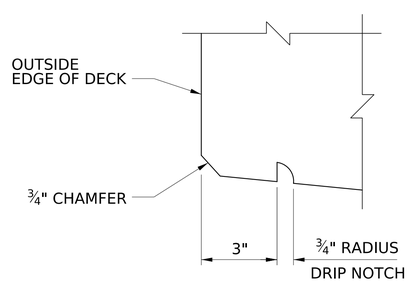

DRIP NOTCH DETAIL

NOTES:

1. FOR ADDITIONAL NOTES, SEE SHEET XX .
2. SEAL JOINT WITH A POLYURETHANE OR POLYMERIC MATERIAL CONFORMING TO ASTM C920, TYPE S. INCLUDE PAYMENT IN ITEM 601003-001 CLASS K CONCRETE.
3. THE FORM SUPPORTS SHALL NOT PROTRUDE INTO THE DECK MORE THAN ½" ABOVE THE TOP OF THE CONNECTION BAR.
4. CONSTRUCTION JOINT SHALL BE FINISHED WITH A ¼" EDGING TOOL, THEN SEAL WITH LOW MODULUS SILICONE JOINT SEALANT PER SECTION 708.4. SEALANT NOT APPLICABLE TO LONGITUDINAL CONSTRUCTION JOINT.

NO.	REVISION	DATE	BY

WEST VIRGINIA DEPARTMENT OF TRANSPORTATION
DIVISION OF HIGHWAYS
ENGINEERING DIVISION

I-64 OVER KANAWHA RIVER
EUGENE A. CARTER MEMORIAL BRIDGE +3

TYPICAL DECK DETAILS (2 OF 5)

DESIGNED	DATE
JWB	09/25
DRAWN	
SCN	09/25
CHECKED	
REVIEWED	

NOT TO SCALE

HDR ENGINEERING INC.
CONSULTING ENGINEERS
CHARLESTON, WV
681-341-6100

SHEET $DKDT3#
BRIDGE NO. 2563.6

SNOLEN $DD-MMM-YYYY HH:MM$ pw://pwhdruseas02.intranet.hdr:HDR_US_East_02/Documents/WV_DOT/WVDOT-Eugene_Carter_Bridge_3/6.0_CAD_BIM/6.2_WIP/HDR/6.2.2_Sheet_Files/23_Structure/4.082 Typ Deck Dets_02.dgn

PROJECT NUMBERS		DISTRICT	COUNTY	SHEET NO.	TOTAL
STATE	FEDERAL				
S320-64-57.44 00	NHPP-0064 (497)D	1	KANAWHA		

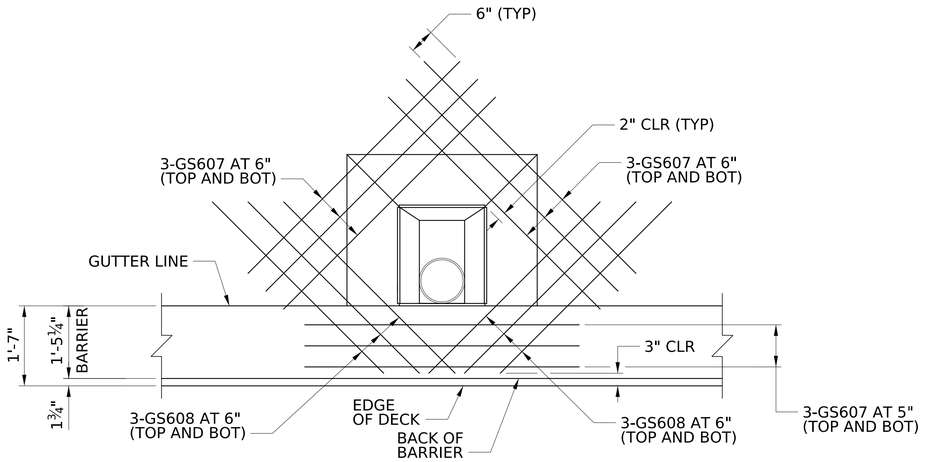

TYPE 2 SCUPPER REINFORCING DETAIL

(2 LOCATIONS)
NOT TO SCALE

NO.	REVISION	DATE	BY

WEST VIRGINIA DEPARTMENT OF TRANSPORTATION
DIVISION OF HIGHWAYS
ENGINEERING DIVISION

I-64 OVER KANAWHA RIVER
EUGENE A. CARTER MEMORIAL BRIDGE +3

TYPICAL DECK DETAILS
(3 OF 5)

DESIGNED	DATE
KCO	09/25
DRAWN	
SCN	09/25
CHECKED	
REVIEWED	

HDR ENGINEERING INC.
CONSULTING ENGINEERS
CHARLESTON, WV
681-341-6100

SHEET $DKDT1of$

BRIDGE NO. 2563.6

SNOLEN $DD-MMM-YYYY HH:MM$ pw://pwhdruseas02.intranet.hdr:HDR_US_East_02/Documents/WV_DOT/WVDOT-Eugene_Carter_Bridge_3/6.0_CAD_BIM/6.2_WIP/HDR/6.2.2_Sheet_Files/23_Structure/4.083_Typ Deck Dets_03.dgn

PROJECT NUMBERS		DISTRICT	COUNTY	SHEET NO.	TOTAL
STATE	FEDERAL				
S320-64-57.44 00	NHPP-0064 (497)D	1	KANAWHA		

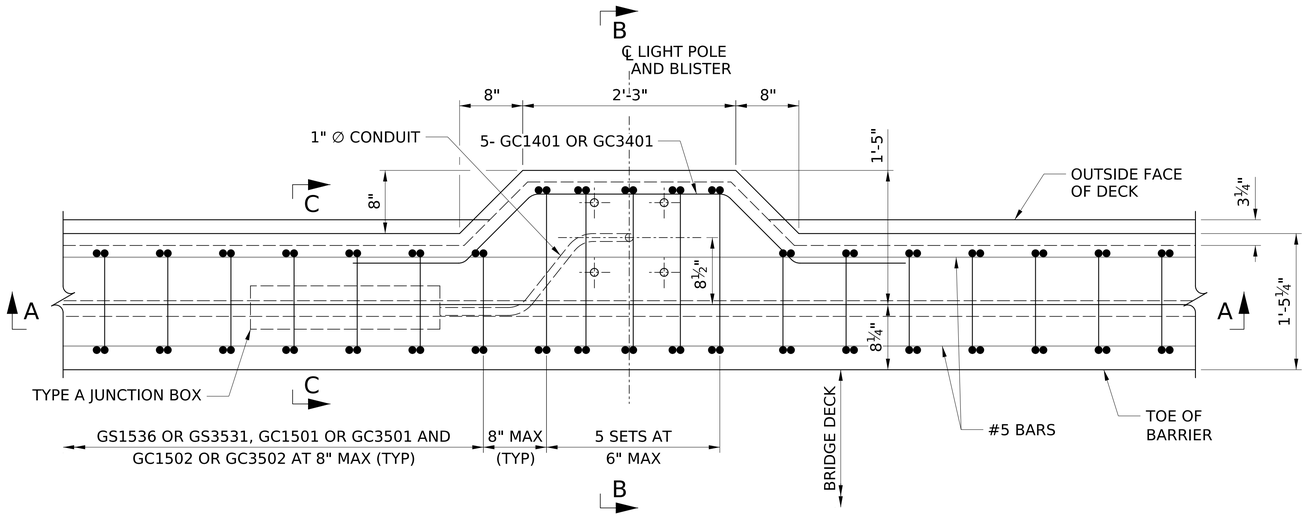

PLAN

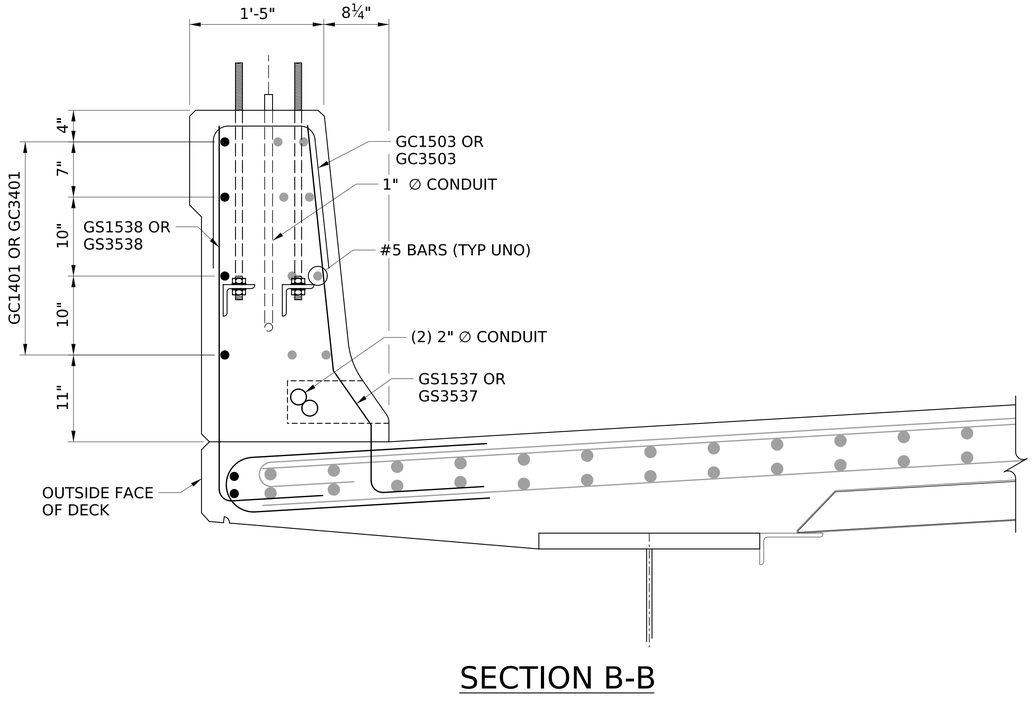

SECTION B-B

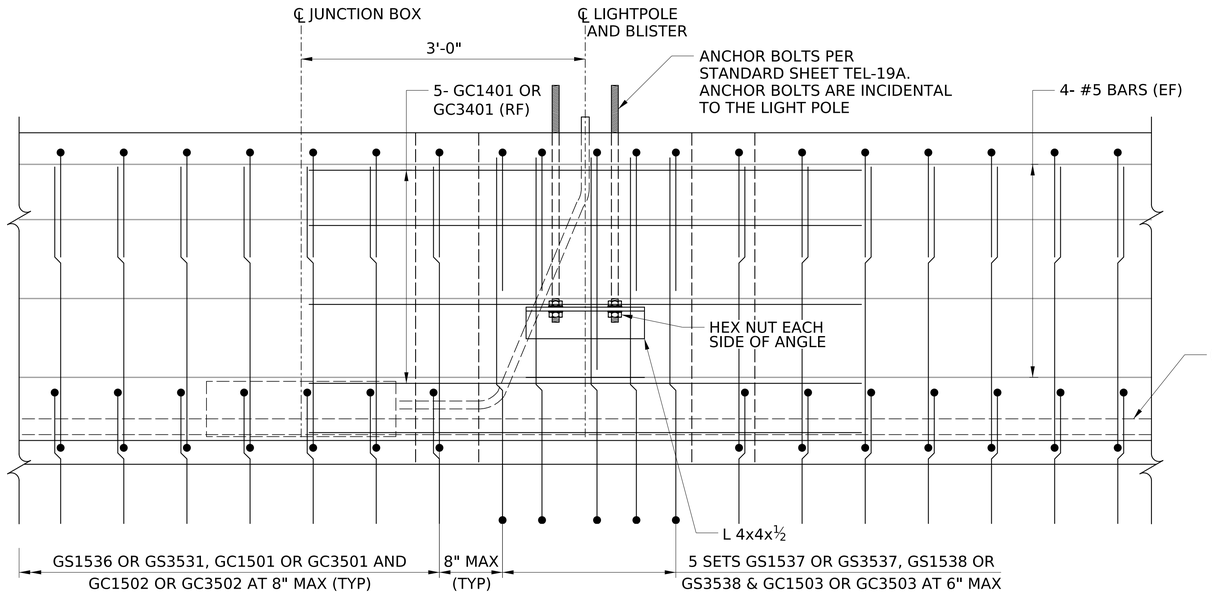

SECTION A-A

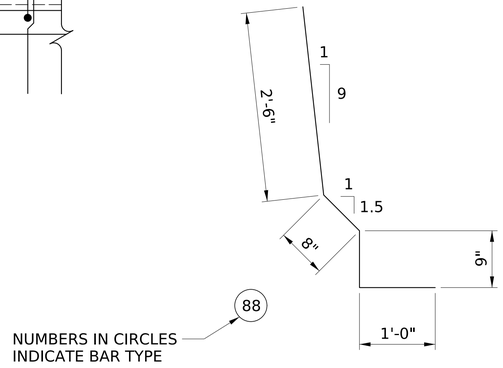

GS1537 & GS3537

NOT TO SCALE

BAR LENGTH = 4'-11"

NOTES:

1. FOR GENERAL NOTES, SEE SHEETS $GN01$ $GN04$
2. FOR REINFORCING SCHEDULE, SEE SHEET $DKBAR$
3. FOR LIGHTING LOCATIONS AND DETAILS, SEE ROADWAY PLANS.
4. PROVIDE LEVELING PAD AND ANCHOR BOLT DETAILS IN ACCORDANCE WITH STANDARD SHEET TEL-19A.
5. BASE PLATE AND ANCHOR BOLT DETAILS TO BE DETERMINED BY LIGHTING POLE MANUFACTURER.

NO.	REVISION	DATE	BY

WEST VIRGINIA DEPARTMENT OF TRANSPORTATION
DIVISION OF HIGHWAYS
ENGINEERING DIVISION

I-64 OVER KANAWHA RIVER
EUGENE A. CARTER MEMORIAL BRIDGE +3

TYPICAL DECK DETAILS (4 OF 5)

DESIGNED KCO	DATE 12/25	
DRAWN SCN	12/25	
CHECKED		
REVIEWED		

HDR ENGINEERING INC.
CONSULTING ENGINEERS
CHARLESTON, WV
681-341-6100

SHEET $LSD01$OF

BRIDGE NO. 2563.6

SNOLEN $DD-MMM-YYYY HH:MM$ pw://pwhdruseas02.intranet.hdr:HDR_US_East_02/Documents/WV_DOT/WVDOT-Eugene_Carter_Bridge_3/6.0_CAD_BIM/6.2_WIP/HDR/6.2.2_Sheet_Files/23_Structure/4.084 Typpical Deck Details_Light Blister.dgn

PROJECT NUMBERS		DISTRICT	COUNTY	SHEET NO.	TOTAL
STATE	FEDERAL				
S320-64-57.44 00	NHPP-0064 (497)D	1	KANAWHA	$TDKS006$	

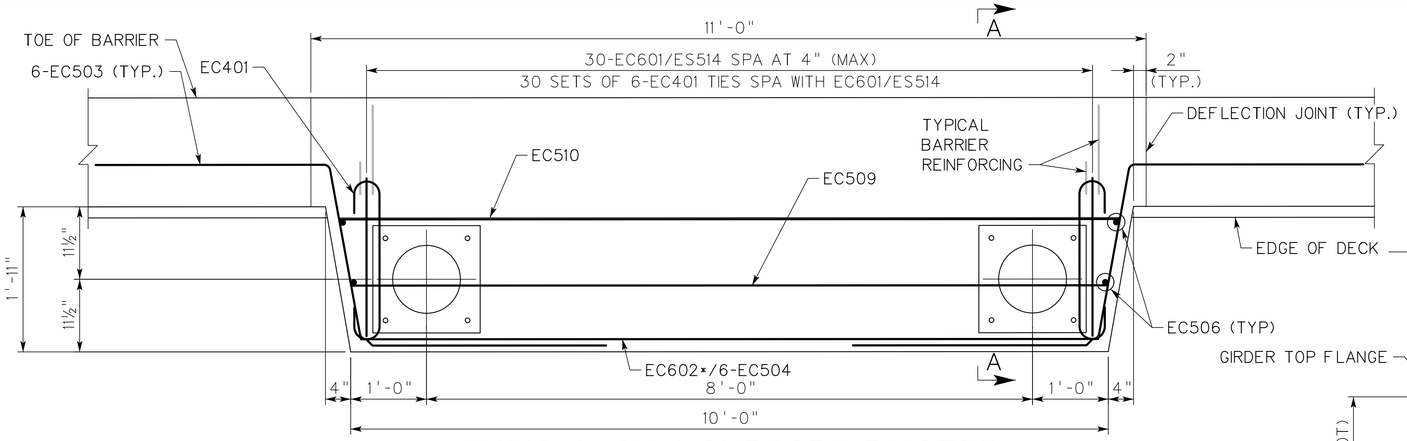

TYPICAL SIGN SUPPORT BLISTER

(BARRIER REINFORCING SHOWN)

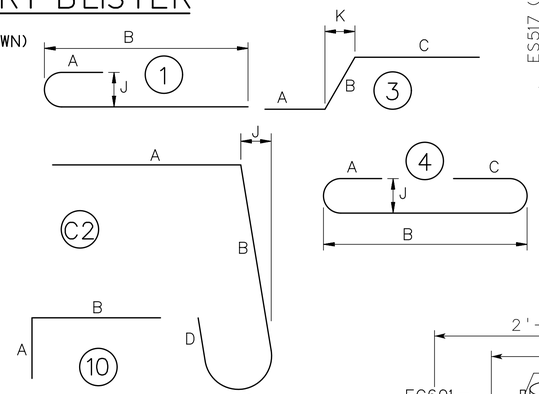

DECK SLAB AND BARRIER REINFORCEMENT SCHEDULE											
MARK	SIZE	LENGTH	NO.	TYPE	A	B	C	D	J	K	REMARKS
EASTBOUND BRIDGE SIGN SUPPORT BLISTER											
GS514	5	6'-2	60	10	3'-2	3'-0					
GS515	5	9'-8	4	STR							
GS516	5	9'-10	4	STR							
GS517	5	10'-2	12	STR							
GS518	5	3'-11	30	STR							
GS519	5	14'-1	30	1	7"	13'-6			5"		
GC401	4	2'-7	360	4	3"	2'-1	3"		4"		
GC503	5	8'-10	24	3	3'-3	2'-4	3'-3			5"	
GC504	5	9'-8	12	STR							
GC506	5	3'-2	8	STR							
GC509	5	10'-0	2	STR							
GC510	5	10'-3	2	STR							
GC601	6	5'-11	60	C2	2'-3	2'-5	9"	3"	3		
GC602	6	9'-6	2	STR							

DECK SLAB AND BARRIER REINFORCEMENT SCHEDULE											
MARK	SIZE	LENGTH	NO.	TYPE	A	B	C	D	J	K	REMARKS
WESTBOUND BRIDGE SIGN SUPPORT BLISTER											
GS514	5	6'-2	60	10	3'-2	3'-0					
GS515	5	9'-8	4	STR							
GS516	5	9'-10	4	STR							
GS517	5	10'-2	12	STR							
GS518	5	3'-11	30	STR							
GS519	5	14'-1	30	1	7"	13'-6			5"		
GC401	4	2'-7	360	4	3"	2'-1	3"		4"		
GC503	5	8'-10	24	3	3'-3	2'-4	3'-3			5"	
GC504	5	9'-8	12	STR							
GC506	5	3'-2	8	STR							
GC509	5	10'-0	2	STR							
GC510	5	10'-3	2	STR							
GC601	6	5'-11	60	C2	2'-3	2'-5	9"	3"	3		
GC602	6	9'-6	2	STR							

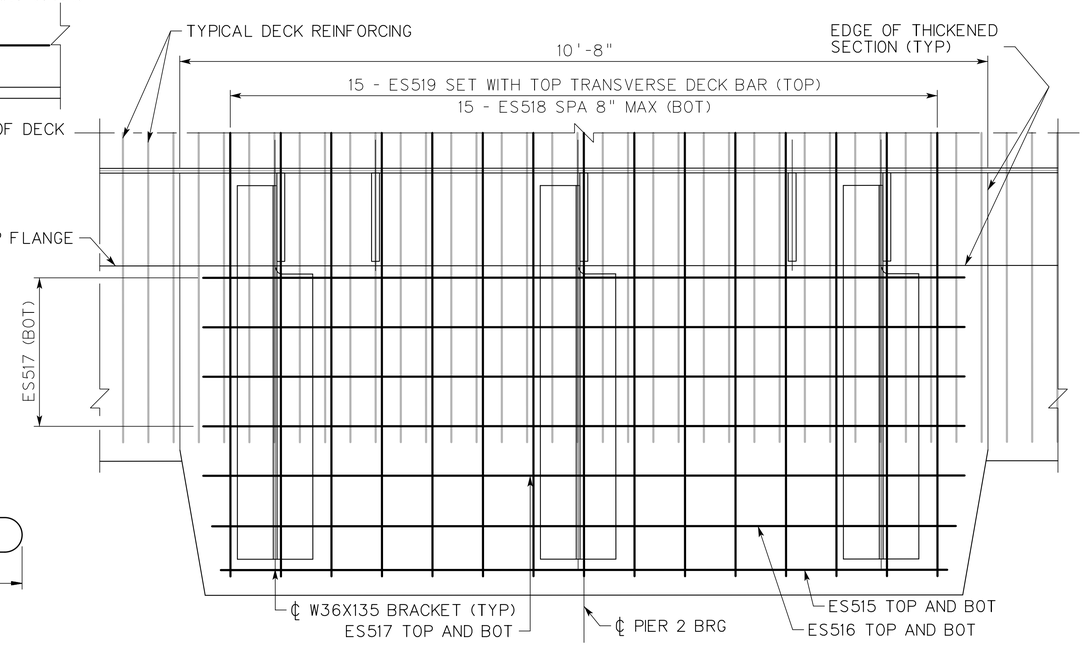

TYPICAL SIGN SUPPORT BLISTER

(DECK REINFORCING SHOWN)

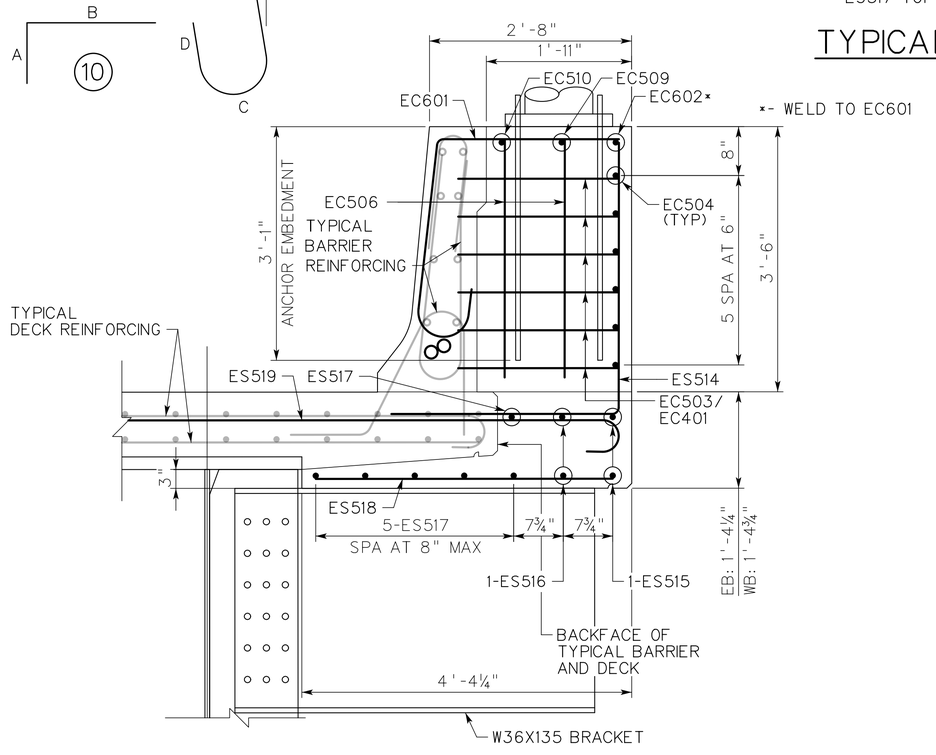

SECTION A-A

NO SCALE

NOTES:

1. FOR DECK TYPICAL SECTION AND BARRIER DETAILS, SEE SHEETS;
   EB: M AND M
   WB: M AND M
2. FOR DECK PAVING PLAN, SEE SHEETS;
   EB: M THRU M
   WB: M THRU M
3. FOR FRAMING PLAN, SEE SHEEETS;
   EB: M THRU M
   WB: M THRU M
4. FOR BRACKET DETAILS SEE, SHEET M
5. FOR REINFORCING NOTES, SEE SHEETS M THRU M

NO.	REVISION	DATE	BY

WEST VIRGINIA DEPARTMENT OF TRANSPORTATION
DIVISION OF HIGHWAYS
ENGINEERING DIVISION

I-64 OVER KANAWHA RIVER
EUGENE A. CARTER MEMORIAL BRIDGE +3

TYPICAL DECK DETAILS (5 OF 5)

DESIGNED	DATE
KCO	12/25
DRAWN	
SCN	12/25
CHECKED	
REVIEWED	

HDR ENGINEERING INC.
CONSULTING ENGINEERS
CHARLESTON, WV
681-341-6100

SHEET OF
BRIDGE NO. 2563.6

SNOLEN
$DD-MMM-YYYY HH:MM$
pw://pwhdruseas02.intranet.hdr:HDR_US_East_02/Documents/WV_DOT/WVDOT-Eugene_Carter_Bridge_3/6.0_CAD_BIM/6.2_WIP/HDR/6.2.2_Sheet_Files/23_Structure/4.085 Typical Deck Details.dgn

PROJECT NUMBERS		DISTRICT	COUNTY	SHEET NO.	TOTAL
STATE	FEDERAL				
S320-64-57.44 00	NHPP-0064 (497)D	1	KANAWHA		

LOCATION		ML I-64 STATION	PGL ELEV	LT FASCIA ELEV	LT GUTTER ELEV	GIRDER G1 ELEV	STRINGER S1 ELEV	GIRDER G2 ELEV	STRINGER S2 ELEV	GIRDER G3 ELEV	STRINGER S3 ELEV	GIRDER G4 ELEV	RT GUTTER ELEV	RT FASCIA ELEV
CL BRG ABUT AE		401+50.00	668.61	667.50	667.62	667.74	668.41	669.08	669.75	670.41	671.08	671.75	671.87	672.00
SPAN 1 EB	1.10	401+62.95	668.63	667.52	667.65	667.77	668.43	669.10	669.77	670.44	671.11	671.78	671.90	672.02
	1.20	401+75.90	668.65	667.54	667.67	667.78	668.45	669.12	669.79	670.46	671.13	671.80	671.91	672.04
	1.30	401+88.85	668.66	667.55	667.68	667.80	668.47	669.13	669.80	670.47	671.14	671.81	671.93	672.05
	1.40	402+01.80	668.67	667.56	667.69	667.80	668.47	669.14	669.81	670.48	671.15	671.82	671.93	672.06
	1.50	402+14.75	668.67	667.56	667.68	667.80	668.47	669.14	669.81	670.47	671.14	671.81	671.93	672.06
	1.60	402+27.70	668.66	667.55	667.67	667.79	668.46	669.13	669.80	670.47	671.13	671.80	671.92	672.05
	1.70	402+40.65	668.64	667.53	667.66	667.77	668.44	669.11	669.78	670.45	671.12	671.79	671.90	672.03
	1.80	402+53.60	668.62	667.51	667.63	667.75	668.42	669.09	669.76	670.42	671.09	671.76	671.88	672.01
	1.90	402+66.55	668.58	667.47	667.60	667.72	668.39	669.06	669.72	670.39	671.06	671.73	671.85	671.97
CL PIER A2		402+79.50	668.55	667.44	667.56	667.68	668.35	669.02	669.69	670.36	671.02	671.69	671.81	671.94
SPAN 2 EB	2.10	402+92.45	668.50	667.39	667.52	667.63	668.30	668.97	669.64	670.31	670.98	671.65	671.76	671.89
	2.20	403+05.40	668.45	667.34	667.46	667.58	668.25	668.92	669.59	670.26	670.93	671.59	671.71	671.84
	2.30	403+18.35	668.39	667.28	667.40	667.52	668.19	668.86	669.53	670.20	670.87	671.53	671.65	671.78
	2.40	403+31.30	668.32	667.21	667.34	667.45	668.12	668.79	669.46	670.13	670.80	671.47	671.58	671.71
	2.50	403+44.25	668.25	667.14	667.26	667.38	668.05	668.72	669.39	670.06	670.72	671.39	671.51	671.64
	2.60	403+57.20	668.16	667.05	667.18	667.30	667.97	668.64	669.30	669.97	670.64	671.31	671.43	671.55
	2.70	403+70.15	668.08	666.97	667.09	667.21	667.88	668.55	669.22	669.89	670.55	671.22	671.34	671.47
	2.80	403+83.10	667.98	666.87	667.00	667.11	667.78	668.45	669.12	669.79	670.46	671.13	671.24	671.37
	2.90	403+96.05	667.88	666.77	666.89	667.01	667.68	668.35	669.02	669.69	670.35	671.02	671.14	671.27
	CL BRG 2 EB	404+09.00	667.77	666.66	666.78	666.90	667.57	668.24	668.91	669.58	670.24	670.91	671.03	671.16
CL PIER A4		404+10.00	667.76	666.65	666.77	666.89	667.56	668.23	668.90	669.57	670.24	670.90	671.02	671.15
SPAN 3 EB	CL BRG 3 EB	404+11.00	667.75	666.64	666.77	666.88	667.55	668.22	668.89	669.56	670.23	670.90	671.01	671.14
	3.10	404+21.90	667.65	666.54	666.67	666.78	667.45	668.12	668.79	669.46	670.13	670.80	670.91	671.04
	3.20	404+32.80	667.55	666.44	666.56	666.68	667.35	668.02	668.69	669.35	670.02	670.69	670.81	670.94
	3.30	404+43.70	667.44	666.33	666.45	666.57	667.24	667.91	668.58	669.24	669.91	670.58	670.70	670.83
	3.40	404+54.60	667.32	666.21	666.34	666.45	667.12	667.79	668.46	669.13	669.80	670.47	670.58	670.71
	3.50	404+65.50	667.20	666.09	666.22	666.33	667.00	667.67	668.34	669.01	669.68	670.35	670.46	670.59
	3.60	404+76.40	667.08	665.97	666.09	666.21	666.88	667.55	668.22	668.89	669.55	670.22	670.34	670.47
	3.70	404+87.30	666.95	665.84	665.96	666.08	666.75	667.42	668.09	668.76	669.42	670.09	670.21	670.34
	3.80	404+98.20	666.81	665.70	665.83	665.94	666.61	667.28	667.95	668.62	669.29	669.96	670.07	670.20
	3.90	405+09.10	666.67	665.56	665.69	665.80	666.47	667.14	667.81	668.48	669.15	669.82	669.93	670.06
CL PIER A6		405+20.00	666.53	665.42	665.54	665.66	666.33	667.00	667.67	668.33	669.00	669.67	669.79	669.92
SPAN 4 EB	4.10	405+30.90	666.38	665.27	665.39	665.51	666.18	666.85	667.52	668.18	668.85	669.52	669.64	669.77
	4.20	405+41.80	666.22	665.11	665.24	665.35	666.02	666.69	667.36	668.03	668.70	669.37	669.48	669.61
	4.30	405+52.70	666.06	664.95	665.08	665.19	665.86	666.53	667.20	667.87	668.54	669.21	669.32	669.45
	4.40	405+63.60	665.89	664.78	664.91	665.03	665.70	666.37	667.03	667.70	668.37	669.04	669.16	669.28
	4.50	405+74.50	665.72	664.61	664.74	664.86	665.53	666.19	666.86	667.53	668.20	668.87	668.99	669.11
	4.60	405+85.40	665.55	664.44	664.56	664.68	665.35	666.02	666.69	667.36	668.03	668.69	668.81	668.94
	4.70	405+96.30	665.37	664.26	664.38	664.50	665.17	665.84	666.51	667.18	667.84	668.51	668.63	668.76
	4.80	406+07.20	665.18	664.07	664.20	664.31	664.98	665.65	666.32	666.99	667.66	668.33	668.44	668.57
	4.90	406+18.10	664.99	663.88	664.01	664.12	664.79	665.46	666.13	666.80	667.47	668.14	668.25	668.38
	CL BRG 4 EB	406+29.00	664.79	663.68	663.81	663.93	664.60	665.26	665.93	666.60	667.27	667.94	668.06	668.18
CL PIER A8		406+30.00	664.77	663.66	663.79	663.91	664.58	665.25	665.91	666.58	667.25	667.92	668.04	668.16

ON ALL THESE DECK ELEVATION SHEETS, A CARTOON OF THE CROSS-SECTION WILL BE PROVIDED TO NOTE WHERE THE POINTS ARE TAKEN

NOTES:

1. FOR GENERAL NOTES, SEE SHEETS X THRU X.
2. FOR GENERAL PLAN, SEE SHEET XX.
3. FOR KEY PLAN, SEE SHEET XX.
4. FOR FRAMING PLAN, SEE SHEET XX.
5. DECK ELEVATIONS ON THIS SHEET ARE SHOWN AT TENTH POINTS ALONG SPAN BETWEEN CL BEARINGS, AND AT SUBSTRUCTURE UNITS.
6. ELEVATIONS ARE SHOWN TO THE TOP OF THE 8½" CONCRETE DECK.
7. DECK POINTS WITHIN EACH ROW OF THE TABLE ARE RADIAL TO ML I-64, EXCEPT FOR CL BEARINGS ADJACENT TO EXPANSION PIERS, WHERE POINTS ARE PARALLEL TO NEAREST SUBSTRUCTURE UNIT. ML STATIONS, WHERE VARYING, ARE REPORTED AT THE PGL.

NO.	REVISION	DATE	BY

WEST VIRGINIA DEPARTMENT OF TRANSPORTATION
DIVISION OF HIGHWAYS
ENGINEERING DIVISION

I-64 OVER KANAWHA RIVER
EUGENE A. CARTER MEMORIAL BRIDGE +3

DECK ELEVATIONS MAINLINE (1 OF 12)

DESIGNED	DATE
DJR	12/25
DRAWN	
SCN	12/25
CHECKED	
REVIEWED	

HDR ENGINEERING INC.
CONSULTING ENGINEERS
CHARLESTON, WV
681-341-6100

SHEET OF
BRIDGE NO. 2563.6

SNOLEN $DD-MMM-YYYY HH:MM$ pw://pwhdruseas02.intranet.hdr:HDR_US_East_02/Documents/WV_DOT/WVDOT-Eugene_Carter_Bridge_3/6.0_CAD_BIM/6.2_WIP/HDR/6.2.2_Sheet_Files/23_Structure/4.101 Deck Elevations ML

PROJECT NUMBERS		DISTRICT	COUNTY	SHEET NO.	TOTAL
STATE	FEDERAL				
S320-64-57.44 00	NHPP-0064 (497)D	1	KANAWHA		

	LOCATION	ML I-64 STATION	PGL ELEV	LT FASCIA ELEV	LT GUTTER ELEV	GIRDER G1 ELEV	STRINGER S1 ELEV	GIRDER G2 ELEV	STRINGER S2 ELEV	GIRDER G3 ELEV	STRINGER S3 ELEV	GIRDER G3A ELEV	GIRDER G4 ELEV	RT GUTTER [ML] ELEV	RT FASCIA [ML] ELEV	LT FASCIA [D] ELEV	LT GUTTER [D] ELEV	GIRDER DG1 ELEV	GIRDER DG2 ELEV	GIRDER DG3 ELEV	BL RAMP C ELEV	GIRDER DG4 ELEV	RT GUTTER ELEV	RT FASCIA ELEV	BL RAMP D STATION	LOCATION	
	CL PIER A8	406+30.00	663.51	663.66	663.79	663.91	664.48	665.05	665.63	666.20	666.77	667.35	667.92	668.04	668.16	666.01	665.91	665.83	665.42	665.02	664.86	664.61	664.53	664.43	4+92.70	CL PIER D3	
SPAN 5 EB	CL BRG 5 EB	406+31.00	663.50	663.65	663.77	663.89	664.46	665.04	665.61	666.18	666.76	667.33	667.90	668.02	668.15	666.01	665.91	665.83	665.42	665.02	664.86	664.61	664.53	664.43	4+93.70	CL BRG DA	
	5.10	406+44.90	663.24	663.39	663.51	663.63	664.20	664.78	665.35	665.92	666.50	667.07	667.64	667.76	667.89	666.01	665.92	665.83	665.43	665.02	664.86	664.62	664.53	664.44	5+05.66	DA.10	
	5.20	406+58.80	662.97	663.12	663.25	663.36	663.94	664.51	665.08	665.66	666.23	666.80	667.38	667.49	667.62	665.98	665.88	665.80	665.39	664.99	664.83	664.58	664.50	664.40	5+17.62	DA.20	
	5.30	406+72.70	662.70	662.85	662.97	663.09	663.66	664.24	664.81	665.38	665.96	666.53	667.10	667.22	667.35	665.91	665.82	665.73	665.33	664.92	664.76	664.52	664.43	664.34	5+29.58	DA.30	
	5.40	406+86.60	662.41	662.56	662.69	662.80	663.38	663.95	664.52	665.10	665.67	666.24	666.82	666.93	667.06	665.81	665.72	665.63	665.23	664.82	664.66	664.42	664.33	664.24	5+41.54	DA.40	
	5.50	407+00.50	662.12	662.27	662.40	662.51	663.09	663.66	664.23	664.81	665.38	665.95	666.53	666.64	666.77	665.68	665.58	665.50	665.09	664.69	664.53	664.28	664.20	664.10	5+53.50	DA.50	
	5.60	407+14.40	661.85	661.99	662.12	662.23	662.80	663.36	663.93	664.49	665.05	665.62	666.18	666.30	666.42	665.51	665.41	665.33	664.92	664.52	664.36	664.11	664.03	663.93	5+65.45	DA.60	
	5.70	407+28.30	661.62	661.76	661.88	661.99	662.52	663.06	663.60	664.13	664.67	665.21	665.75	665.85	665.97	665.31	665.21	665.13	664.72	664.32	664.16	663.91	663.83	663.73	5+77.41	DA.70	
	5.80	407+42.20	661.38	661.51	661.62	661.73	662.24	662.75	663.26	663.77	664.28	664.79	665.30	665.41	665.52	665.07	664.98	664.89	664.49	664.08	663.92	663.68	663.59	663.50	5+89.37	DA.80	
	5.90	407+56.10	661.13	661.26	661.36	661.46	661.95	662.43	662.91	663.40	663.88	664.37	664.85	664.95	665.06	664.80	664.71	664.62	664.22	663.81	663.65	663.41	663.32	663.23	6+01.33	DA.90	SPAN DA
	CL PIER A	407+70.00	660.87	660.99	661.10	661.19	661.65	662.10	662.56	663.02	663.48	663.93	664.39	664.48	664.59	664.21	664.14	664.08	663.78	663.47	663.35	663.16	663.09	663.01	6+13.29	CL PIER A	
SPAN 6 EB	6.10	407+84.55	660.60	660.71	660.81	660.89	661.32	661.75	662.18	662.61	663.04	663.47	663.90	-	-	-	-	-	663.26	662.99	662.88	662.71	662.65	662.59	6+29.62	6.10	
	6.20	407+99.10	660.31	660.42	660.51	660.59	660.99	661.39	661.79	662.20	662.60	663.00	663.40	-	-	-	-	-	662.69	662.45	662.36	662.21	662.16	662.11	6+45.58	6.20	
	6.30	408+13.65	660.02	660.12	660.20	660.27	660.65	661.02	661.40	661.77	662.15	662.52	662.89	-	-	-	-	-	-	661.89	661.81	661.68	661.64	661.59	6+61.28	6.30	
	6.40	408+28.20	659.71	659.80	659.88	659.95	660.30	660.64	660.99	661.34	661.68	662.03	662.38	-	-	-	-	-	-	661.32	661.26	661.15	661.11	661.07	6+76.77	6.40	
	6.50	408+42.75	659.40	659.48	659.56	659.62	659.94	660.26	660.58	660.89	661.21	661.53	661.85	-	-	-	-	-	-	660.77	660.71	660.63	660.60	660.56	6+92.11	6.50	
	6.60	408+57.30	659.08	659.16	659.22	659.28	659.57	659.86	660.15	660.44	660.73	661.02	661.31	-	-	-	-	-	-	-	660.17	660.10	660.07	660.05	7+07.34	6.60	
	6.70	408+71.85	658.75	658.82	658.88	658.93	659.19	659.45	659.72	659.98	660.24	660.51	660.77	-	-	-	-	-	-	-	659.63	659.56	659.53	659.50	7+22.47	6.70	
	6.80	408+86.40	658.41	658.47	658.52	658.57	658.80	659.04	659.28	659.51	659.75	659.98	660.22	-	-	-	-	-	-	-	659.10	659.02	658.99	658.96	7+37.53	6.80	
	6.90	409+00.95	658.06	658.11	658.16	658.20	658.41	658.62	658.82	659.03	659.24	659.45	659.65	-	-	-	-	-	-	-	658.57	658.49	658.46	658.43	7+52.52	6.90	
	CL BRG 6 EB	409+15.52	657.70	657.75	657.79	657.82	658.00	658.17	658.35	658.52	658.69	658.87	659.04	-	-	-	-	-	-	-	658.00	657.91	657.88	657.85	7+68.58	6.99	SPAN 6 EB
	CL PIER B	409+19.52	657.60	657.65	657.68	657.72	657.89	658.05	658.22	658.39	658.55	658.72	658.88	-	-	-	-	-	-	-	657.85	657.77	657.74	657.71	7+72.58	CL PIER B	

NOTES:

1. FOR GENERAL NOTES, SEE SHEETS X THRU X.
2. FOR GENERAL PLAN, SEE SHEET XX.
3. FOR KEY PLANS, SEE SHEET XX AND XX.
4. FOR FRAMING PLAN, SEE SHEET XX.
5. DECK ELEVATIONS ON THIS SHEET ARE SHOWN AT TENTH POINTS ALONG SPAN BETWEEN CL BEARINGS, AND AT SUBSTRUCTURE UNITS.
6. ELEVATIONS ARE SHOWN TO THE TOP OF THE 8½" CONCRETE DECK.
7. DECK POINTS ON MAINLINE I-64 WITHIN EACH ROW OF THE TABLE ARE RADIAL TO ML I-64, EXCEPT FOR CL BEARINGS ADJACENT TO EXPANSION PIERS, WHERE POINTS ARE PARALLEL TO NEAREST SUBSTRUCTURE UNIT. ML STATIONS, WHERE VARYING, ARE REPORTED AT THE PGL.
8. DECK POINTS IN SPAN DA ARE RADIAL TO BL RAMP D UP TO PIER A, AND THEN AS DESCRIBED IN NOTE 7. RAMP D STATIONS, WHERE VARYING, ARE REPORTED AT BL RAMP D.

NO.	REVISION	DATE	BY

WEST VIRGINIA DEPARTMENT OF TRANSPORTATION
DIVISION OF HIGHWAYS
ENGINEERING DIVISION

I-64 OVER KANAWHA RIVER
EUGENE A. CARTER MEMORIAL BRIDGE +3

DECK ELEVATIONS MAINLINE (2 OF 12)

DESIGNED	DATE
DJR	12/25
DRAWN	
SCN	12/25
CHECKED	
REVIEWED	

HDR ENGINEERING INC.
CONSULTING ENGINEERS
CHARLESTON, WV
681-341-6100

SHEET OF
BRIDGE NO. 2563.6

SNOLEN $DD-MMM-YYYY HH:MM$ pw://pwhdruseas02.intranet.hdr:HDR_US_East_02/Documents/WV_DOT/WVDOT-Eugene_Carter_Bridge_3/6.0_CAD_BIM/6.2_WIP/HDR/6.2.2_Sheet_Files/23_Structure/4.102 Deck Elevations ML

PROJECT NUMBERS		DISTRICT	COUNTY	SHEET NO.	TOTAL
STATE	FEDERAL				
S320-64-57.44 00	NHPP-0064 (497)D	1	KANAWHA		

	LOCATION	ML I-64 STATION	PGL ELEV	LT FASCIA ELEV	LT GUTTER ELEV	STRINGER S10 ELEV	STRINGER S11 ELEV	STRINGER S12 ELEV	CROWN ELEV	STRINGER S13 ELEV	STRINGER S14 ELEV	STRINGER S15 ELEV	BREAK PT ELEV	STRINGER S16 ELEV	STRINGER S17 ELEV	STRINGER S18 ELEV	RT GUTTER ELEV	RT GUTTER ELEV
	CL PIER B	409+19.52	657.69	657.65	657.68	657.72	657.88	658.05	658.09	658.21	658.37	658.54	658.65	658.70	658.86	659.02	659.06	659.09
SPAN 7 EB	CL BRG 7 EB	409+20.02	657.67	657.63	657.67	657.70	657.87	658.03	658.08	658.19	658.36	658.52	658.63	658.68	658.84	659.00	659.04	659.07
	7.05	409+43.25	656.96	657.00	657.03	657.06	657.20	657.34	657.38	657.47	657.60	657.72	657.81	657.84	657.97	658.09	658.12	658.14
	7.10	409+66.50	656.26	656.29	656.33	656.35	656.49	656.64	656.68	656.73	656.81	656.89	656.95	656.97	657.06	657.14	657.15	657.17
	7.15	409+89.75	655.55	655.59	655.62	655.65	655.79	655.93	655.97	656.00	656.03	656.07	656.10	656.11	656.14	656.18	656.19	656.20
	7.20	410+13.00	654.84	654.88	654.91	654.94	655.08	655.22	655.26	655.26	655.25	655.24	655.24	655.24	655.23	655.22	655.22	655.22
	7.25	410+36.25	654.14	654.17	654.21	654.23	654.37	654.52	654.56	654.52	654.47	654.42	654.38	654.37	654.32	654.27	654.26	654.25
	7.30	410+59.50	653.43	653.47	653.50	653.53	653.67	653.81	653.85	653.78	653.69	653.60	653.53	653.50	653.41	653.31	653.29	653.27
	7.35	410+82.75	652.72	652.76	652.79	652.82	652.96	653.10	653.14	653.05	652.91	652.77	652.67	652.63	652.50	652.36	652.33	652.30
	7.40	411+06.00	652.02	652.05	652.08	652.11	652.25	652.39	652.44	652.34	652.20	652.06	651.96	651.91	651.77	651.63	651.60	651.57
	7.45	411+29.25	651.31	651.35	651.38	651.41	651.55	651.69	651.73	651.63	651.49	651.35	651.25	651.21	651.07	650.93	650.90	650.87
	7.50	411+52.50	650.60	650.64	650.67	650.70	650.84	650.98	651.02	650.92	650.78	650.64	650.54	650.50	650.36	650.22	650.19	650.16
	7.55	411+75.75	649.90	649.93	649.96	649.99	650.13	650.27	650.32	650.22	650.08	649.93	649.84	649.79	649.65	649.51	649.48	649.45
	7.60	411+99.00	649.19	649.23	649.26	649.29	649.43	649.57	649.61	649.51	649.37	649.23	649.13	649.09	648.95	648.81	648.78	648.75
	7.65	412+22.25	648.48	648.52	648.55	648.58	648.72	648.86	648.90	648.80	648.66	648.52	648.42	648.38	648.24	648.10	648.07	648.04
	7.70	412+45.50	647.77	647.81	647.84	647.87	648.01	648.15	648.19	648.10	647.95	647.81	647.71	647.67	647.53	647.39	647.36	647.33
	7.75	412+68.75	647.07	647.11	647.14	647.17	647.31	647.45	647.49	647.39	647.25	647.11	647.01	646.97	646.83	646.69	646.66	646.63
	7.80	412+92.00	646.36	646.40	646.43	646.46	646.60	646.74	646.78	646.68	646.54	646.40	646.30	646.26	646.12	645.98	645.95	645.92
	7.85	413+15.25	645.65	645.69	645.72	645.75	645.89	646.03	646.07	645.97	645.83	645.69	645.59	645.55	645.41	645.27	645.24	645.21
	7.90	413+38.50	644.95	644.98	645.02	645.04	645.19	645.33	645.37	645.27	645.13	644.99	644.89	644.85	644.71	644.56	644.54	644.50
	7.95	413+61.75	644.24	644.28	644.31	644.34	644.48	644.62	644.66	644.56	644.42	644.28	644.18	644.14	644.00	643.86	643.83	643.80
	CL BRG 7 EB	413+85.00	643.53	643.57	643.60	643.63	643.77	643.91	643.95	643.85	643.71	643.57	643.47	643.43	643.29	643.15	643.12	643.09
	CL PIER C	413+85.50	643.52	643.56	643.59	643.62	643.76	643.90	643.94	643.84	643.70	643.56	643.46	643.42	643.28	643.14	643.11	643.08

NOTES:

1. FOR GENERAL NOTES, SEE SHEETS X THRU X.
2. FOR GENERAL PLAN, SEE SHEET XX.
3. FOR KEY PLAN, SEE SHEET XX.
4. FOR FRAMING PLAN, SEE SHEET XX.
5. DECK ELEVATIONS ON THIS SHEET ARE SHOWN AT TENTH POINTS ALONG SPAN BETWEEN CL BEARINGS, AND AT SUBSTRUCTURE UNITS.
6. ELEVATIONS ARE SHOWN TO THE TOP OF THE 8½" CONCRETE DECK.
7. DECK POINTS WITHIN EACH ROW OF THE TABLE ARE PERPENDICULAR TO ML I-64 BEYOND ST STA 410+09.40. STATIONS FOR POINTS BEFORE THE ST STATION ARE REPORTED AT THE PGL.

NO.	REVISION	DATE	BY

WEST VIRGINIA DEPARTMENT OF TRANSPORTATION
DIVISION OF HIGHWAYS
ENGINEERING DIVISION

I-64 OVER KANAWHA RIVER
EUGENE A. CARTER MEMORIAL BRIDGE +3

DECK ELEVATIONS MAINLINE (3 OF 12)

DESIGNED	DATE
DJR	12/25
DRAWN	
SCN	12/25
CHECKED	
REVIEWED	

HDR ENGINEERING INC.
CONSULTING ENGINEERS
CHARLESTON, WV
681-341-6100

SHEET OF
BRIDGE NO. 2563.6

SNOLEN $DD-MMM-YYYY HH:MM$ pw://pwhdruseas02.Intranet.hdr:HDR_US_East_02/Documents/WV_DOT/WVDOT-Eugene_Carter_Bridge_3/6.0_CAD_BIM/6.2_WIP/HDR/6.2.2_Sheet_Files/23_Structure/4.103 Deck Elevations ML

PROJECT NUMBERS		DISTRICT	COUNTY	SHEET NO.	TOTAL
STATE	FEDERAL				
S320-64-57.44 00	NHPP-0064 (497)D	1	KANAWHA		

	LOCATION	ML I-64 STATION	PGL ELEV	LT FASCIA ELEV	LT GUTTER ELEV	GIRDER G1 ELEV	STRINGER S1 ELEV	GIRDER G2 ELEV	CROWN ELEV	STRINGER S2 ELEV	GIRDER G3 ELEV	STRINGER S3 ELEV	GIRDER G4 ELEV	STRINGER S4 ELEV	STRINGER S5 ELEV	STRINGER S6 ELEV	GIRDER G5 ELEV	GIRDER G6 ELEV	RT GUTTER ELEV	RT FASCIA ELEV
	CL PIER C	413+85.50	643.52	643.56	643.59	643.62	643.76	643.90	643.94	643.84	643.70	643.56	643.42	-	-	-	643.28	643.14	643.11	643.08
SPAN 8 EB	CL BRG 8 EB	413+89.50	643.40	643.43	643.47	643.49	643.63	643.78	643.82	643.72	643.58	643.44	643.30	-	-	-	643.15	643.01	642.99	642.95
	8.10	414+01.40	643.03	643.07	643.10	643.13	643.27	643.41	643.45	643.36	643.21	643.07	642.93	-	-	-	642.79	642.65	642.62	642.59
	8.20	414+13.30	642.67	642.71	642.74	642.77	642.91	643.05	643.09	642.99	642.85	642.71	642.57	-	-	-	642.43	642.29	642.26	642.23
	8.30	414+25.20	642.31	642.35	642.38	642.41	642.55	642.69	642.73	642.63	642.49	642.35	642.21	-	-	-	642.07	641.93	641.90	641.87
	8.40	414+37.10	641.95	641.99	642.02	642.05	642.19	642.33	642.37	642.27	642.13	641.99	641.85	-	-	-	641.70	641.56	641.53	641.50
	8.50	414+49.00	641.59	641.63	641.66	641.69	641.83	641.97	642.01	641.91	641.77	641.63	641.49	-	-	-	641.33	641.19	641.16	641.13
	8.60	414+60.90	641.23	641.26	641.30	641.32	641.46	641.60	641.65	641.55	641.41	641.27	641.12	641.03	-	-	640.96	640.82	640.79	640.76
	8.70	414+72.80	640.86	640.90	640.93	640.96	641.10	641.24	641.28	641.18	641.04	640.90	640.76	640.66	-	-	640.59	640.45	640.42	640.39
	8.80	414+84.70	640.50	640.54	640.57	640.60	640.74	640.88	640.92	640.82	640.68	640.54	640.40	640.30	-	-	640.22	640.08	640.05	640.02
	8.90	414+96.60	640.14	640.18	640.21	640.24	640.38	640.52	640.56	640.46	640.32	640.18	640.04	639.93	-	-	639.84	639.70	639.67	639.64
	CL PIER D	415+08.50	639.78	639.82	639.85	639.88	640.02	640.16	640.20	640.10	639.96	639.82	639.68	639.57	-	-	639.47	639.32	639.30	639.26
SPAN 9 EB	9.10	415+20.40	639.42	639.45	639.49	639.51	639.66	639.80	639.84	639.74	639.60	639.46	639.32	639.21	-	-	639.09	638.95	638.92	638.89
	9.20	415+32.30	639.06	639.09	639.12	639.15	639.29	639.43	639.48	639.38	639.24	639.09	638.95	638.85	638.74	-	638.71	638.57	638.54	638.51
	9.30	415+44.20	638.69	638.73	638.76	638.79	638.93	639.07	639.11	639.01	638.87	638.73	638.59	638.49	638.38	-	638.32	638.18	638.16	638.12
	9.40	415+56.10	638.33	638.37	638.40	638.43	638.57	638.71	638.75	638.65	638.51	638.37	638.23	638.13	638.02	-	637.94	637.80	637.77	637.74
	9.50	415+68.00	637.97	638.01	638.04	638.07	638.21	638.35	638.39	638.29	638.15	638.01	637.87	637.76	637.66	-	637.56	637.41	637.39	637.35
	9.60	415+79.90	637.61	637.65	637.68	637.71	637.85	637.99	638.03	637.93	637.79	637.65	637.51	637.40	637.30	637.17	637.17	637.03	637.00	636.97
	9.70	415+91.80	637.25	637.28	637.32	637.34	637.48	637.63	637.67	637.57	637.43	637.29	637.15	637.04	636.94	636.83	636.78	636.64	636.61	636.58
	9.80	416+03.70	636.88	636.92	636.95	636.98	637.12	637.26	637.30	637.21	637.06	636.92	636.78	636.68	636.57	636.47	636.39	636.25	636.22	636.19
	9.90	416+15.60	636.52	636.56	636.59	636.62	636.76	636.90	636.94	636.84	636.70	636.56	636.42	636.32	636.21	636.11	636.00	635.85	635.83	635.79
	CL BRG 9 EB	416+27.50	636.16	636.20	636.23	636.26	636.40	636.54	636.58	636.48	636.34	636.20	636.06	635.95	635.85	635.74	635.60	635.46	635.43	635.40
	CL PIER E	416+28.50	636.13	636.17	636.20	636.23	636.37	636.51	636.55	636.45	636.31	636.17	636.03	635.92	635.82	635.71	635.57	635.43	635.40	635.37

NOTES:

1. FOR GENERAL NOTES, SEE SHEETS X THRU X.
2. FOR GENERAL PLAN, SEE SHEET XX.
3. FOR KEY PLAN, SEE SHEET XX.
4. FOR FRAMING PLAN, SEE SHEET XX.
5. DECK ELEVATIONS ON THIS SHEET ARE SHOWN AT TENTH POINTS ALONG SPAN BETWEEN CL BEARINGS, AND AT SUBSTRUCTURE UNITS.
6. ELEVATIONS ARE SHOWN TO THE TOP OF THE 8½" CONCRETE DECK.
7. DECK POINTS WITHIN EACH ROW OF THE TABLE ARE PERPENDICULAR TO ML I-64.

NO.	REVISION	DATE	BY

WEST VIRGINIA DEPARTMENT OF TRANSPORTATION
DIVISION OF HIGHWAYS
ENGINEERING DIVISION

I-64 OVER KANAWHA RIVER
EUGENE A. CARTER MEMORIAL BRIDGE +3

DECK ELEVATIONS MAINLINE (4 OF 12)

DESIGNED	DJR
DATE	12/25
DRAWN	SCN
DATE	12/25
CHECKED	
REVIEWED	

HDR ENGINEERING INC.
CONSULTING ENGINEERS
CHARLESTON, WV
681-341-6100

SHEET OF
BRIDGE NO. 2563.6

SNOLEN $DD-MMM-YYYY HH:MM$ pw://pwhdruseas02.Intranet.hdr:HDR_US_East_02/Documents/WV_DOT/WVDOT-Eugene_Carter_Bridge_3/6.0_CAD_BIM/6.2_WIP/HDR/6.2.2_Sheet_Files/23_Structure/4.104 Deck Elevations ML

PROJECT NUMBERS		DISTRICT	COUNTY	SHEET NO.	TOTAL
STATE	FEDERAL				
S320-64-57.44 00	NHPP-0064 (497)D	1	KANAWHA		

	LOCATION	ML I-64 STATION	PGL ELEV	LT FASCIA ELEV	LT GUTTER ELEV	GIRDER G1 ELEV	STRINGER S1 ELEV	GIRDER G2 ELEV	CROWN ELEV	STRINGER S2 ELEV	GIRDER G3 ELEV	STRINGER S3 ELEV	GIRDER G4 ELEV	GIRDER G5 ELEV	RT GUTTER [ML] ELEV	RT FASCIA [ML] ELEV	LT FASCIA [F] ELEV	LT FASCIA [F] ELEV	GIRDER FG1 ELEV	STRINGER FS1 ELEV	STRINGER FS2 ELEV	BL RAMP F ELEV	GIRDER FG2 ELEV	RT GUTTER ELEV	RT FASCIA ELEV	BL RAMP F STATION	LOCATION	
	CL PIER E	416+28.50	636.13	636.17	636.20	636.23	636.37	636.52	636.55	636.44	636.30	636.16	636.01	635.87	-	-	-	-	635.53	635.36	635.19	635.14	635.06	635.03	634.99	2+27.81	CL PIER E	
SPAN 10 EB	CL BRG 10 EB	416+29.50	636.10	636.14	636.17	636.20	636.34	636.49	636.52	636.41	636.27	636.13	635.98	635.84	-	-	-	-	635.59	635.37	635.15	635.06	634.93	634.88	634.83	2+30.14	CL BRG DF	SPAN DF
SPAN 10 EB	10.10	416+40.98	635.75	635.79	635.82	635.85	635.99	636.14	636.17	636.06	635.92	635.78	635.63	635.49	-	-	-	-	635.12	634.93	634.74	634.67	634.55	634.51	634.47	2+41.66	DF.10	SPAN DF
SPAN 10 EB	10.20	416+52.45	635.40	635.44	635.47	635.50	635.64	635.79	635.82	635.71	635.57	635.43	635.28	635.14	-	-	-	-	634.71	634.52	634.33	634.26	634.14	634.10	634.06	2+53.19	DF.20	SPAN DF
SPAN 10 EB	10.30	416+63.93	635.05	635.09	635.12	635.15	635.30	635.44	635.47	635.37	635.22	635.08	634.94	634.79	-	-	-	-	634.28	634.09	633.90	633.83	633.71	633.67	633.63	2+64.72	DF.30	SPAN DF
SPAN 10 EB	10.40	416+75.40	634.70	634.74	634.77	634.80	634.95	635.09	635.12	635.02	634.87	634.73	634.59	634.44	-	-	-	-	633.84	633.65	633.46	633.38	633.27	633.23	633.18	2+76.25	DF.40	SPAN DF
SPAN 10 EB	10.50	416+86.88	634.36	634.39	634.43	634.45	634.60	634.74	634.78	634.67	634.52	634.38	634.24	634.09	-	-	-	-	633.37	633.19	633.00	632.92	632.81	632.77	632.72	2+87.78	DF.50	SPAN DF
SPAN 10 EB	10.60	416+98.35	634.01	634.04	634.08	634.11	634.25	634.39	634.43	634.32	634.18	634.03	633.89	633.75	-	-	632.98	632.94	632.90	632.71	632.52	632.45	632.33	632.29	632.25	2+99.31	DF.60	SPAN DF
SPAN 10 EB	10.70	417+09.83	633.66	633.70	633.73	633.76	633.90	634.04	634.08	633.97	633.83	633.68	633.54	633.40	633.37	633.34	632.49	632.44	632.40	632.22	632.03	631.95	631.84	631.80	631.75	3+10.84	DF.70	SPAN DF
SPAN 10 EB	10.80	417+21.30	633.31	633.35	633.38	633.41	633.55	633.69	633.73	633.62	633.48	633.33	633.19	633.05	633.02	632.99	631.98	631.93	631.90	631.71	631.52	631.44	631.33	631.29	631.24	3+22.37	DF.80	SPAN DF
SPAN 10 EB	10.90	417+32.78	632.96	633.00	633.03	633.06	633.20	633.35	633.38	633.27	633.13	632.99	632.84	632.70	632.67	632.64	631.45	631.41	631.37	631.18	630.99	630.92	630.80	630.76	630.72	3+33.90	DF.90	SPAN DF
	CL PIER M	417+44.25	632.61	632.65	632.68	632.71	632.85	633.00	633.03	632.92	632.78	632.64	632.49	632.35	632.32	632.29	630.91	630.87	630.83	630.64	630.45	630.38	630.26	630.22	630.18	3+45.43	CL PIER FA	
SPAN 11 EB	11.10	417+55.73	632.26	632.30	632.33	632.36	632.50	632.65	632.68	632.57	632.43	632.29	632.14	632.00	631.97	631.94												
SPAN 11 EB	11.20	417+67.20	631.91	631.95	631.98	632.01	632.16	632.30	632.33	632.23	632.08	631.94	631.80	631.65	631.62	631.59												
SPAN 11 EB	11.30	417+78.68	631.57	631.60	631.63	631.66	631.81	631.95	631.99	631.88	631.73	631.59	631.45	631.30	631.27	631.24												
SPAN 11 EB	11.40	417+90.15	631.22	631.25	631.29	631.31	631.46	631.60	631.64	631.53	631.38	631.24	631.10	630.95	630.93	630.89												
SPAN 11 EB	11.50	418+01.63	630.87	630.90	630.94	630.97	631.11	631.25	631.29	631.18	631.04	630.89	630.75	630.61	630.58	630.54												
SPAN 11 EB	11.60	418+13.10	630.52	630.56	630.59	630.62	630.76	630.90	630.94	630.83	630.69	630.54	630.40	630.26	630.23	630.20												
SPAN 11 EB	11.70	418+24.58	630.17	630.21	630.24	630.27	630.41	630.55	630.59	630.48	630.34	630.19	630.05	629.91	629.88	629.85												
SPAN 11 EB	11.80	418+36.05	629.82	629.86	629.89	629.92	630.06	630.21	630.24	630.13	629.99	629.85	629.70	629.56	629.53	629.50												
SPAN 11 EB	11.90	418+47.53	629.47	629.51	629.54	629.57	629.71	629.86	629.89	629.78	629.64	629.50	629.35	629.21	629.18	629.15												
SPAN 11 EB	CL BRG 11 EB	418+59.00	629.12	629.16	629.19	629.22	629.36	629.51	629.54	629.43	629.29	629.15	629.00	628.86	628.83	628.80												
	CL PIER R1	418+60.00	629.09	629.13	629.16	629.19	629.33	629.48	629.51	629.40	629.26	629.12	628.97	628.83	628.80	628.77												

NOTES:

1. FOR GENERAL NOTES, SEE SHEETS X THRU X.
2. FOR GENERAL PLAN, SEE SHEET XX.
3. FOR KEY PLAN, SEE SHEET XX.
4. FOR FRAMING PLAN, SEE SHEET XX.
5. DECK ELEVATIONS ON THIS SHEET ARE SHOWN AT TENTH POINTS ALONG SPAN BETWEEN CL BEARINGS, AND AT SUBSTRUCTURE UNITS.
6. ELEVATIONS ARE SHOWN TO THE TOP OF THE 8½" CONCRETE DECK.
7. DECK POINTS ON MAINLINE I-64 WITHIN EACH ROW OF THE TABLE ARE PERPENDICULAR TO ML I-64.
8. DECK POINTS IN SPAN DF ARE RADIAL TO BL RAMP F, AS APPLICABLE, EXCEPT AT PIER C AND ADJACENT BEARINGS FOR SPAN DF. RAMP F STATIONS, WHERE VARYING, ARE REPORTED AT BL RAMP F.

NO.	REVISION	DATE	BY

WEST VIRGINIA DEPARTMENT OF TRANSPORTATION
DIVISION OF HIGHWAYS
ENGINEERING DIVISION

I-64 OVER KANAWHA RIVER
EUGENE A. CARTER MEMORIAL BRIDGE +3

DECK ELEVATIONS MAINLINE (5 OF 12)

DESIGNED	DATE
DJR	12/25
DRAWN	
SCN	12/25
CHECKED	
REVIEWED	

HDR ENGINEERING INC.
CONSULTING ENGINEERS
CHARLESTON, WV
681-341-6100

SHEET OF

BRIDGE NO. 2563.6

SNOLEN $DD-MMM-YYYY HH:MM$ pw://pwhdruseas02.Intranet.hdr:HDR_US_East_02/Documents/WV_DOT/WVDOT-Eugene_Carter_Bridge_3/6.0_CAD_BIM/6.2_WIP/HDR/6.2.2_Sheet_Files/23_Structure/4.105 Deck Elevations ML

PROJECT NUMBERS		DISTRICT	COUNTY	SHEET NO.	TOTAL
STATE	FEDERAL				
S320-64-57.44 00	NHPP-0064 (497)D	1	KANAWHA		

ML I-64 STATION	EASTBOUND ELEVATIONS	
	LT GUTTER ELEV	RT GUTTER ELEV
401+50.00	TBD	TBD
401+60.00	TBD	TBD
401+70.00	TBD	TBD
401+80.00	TBD	TBD
401+90.00	TBD	TBD
402+00.00	TBD	TBD
402+10.00	TBD	TBD
402+20.00	TBD	TBD
402+30.00	TBD	TBD
402+40.00	TBD	TBD
402+50.00	TBD	TBD
402+60.00	TBD	TBD
402+70.00	TBD	TBD
402+80.00	TBD	TBD
402+90.00	TBD	TBD
403+00.00	TBD	TBD
403+10.00	TBD	TBD
403+20.00	TBD	TBD
403+30.00	TBD	TBD
403+40.00	TBD	TBD
403+50.00	TBD	TBD
403+60.00	TBD	TBD
403+70.00	TBD	TBD
403+80.00	TBD	TBD
403+90.00	TBD	TBD
404+00.00	TBD	TBD
404+10.00	TBD	TBD
404+20.00	TBD	TBD
404+30.00	TBD	TBD
404+40.00	TBD	TBD
404+50.00	TBD	TBD
404+60.00	TBD	TBD
404+70.00	TBD	TBD
404+80.00	TBD	TBD
404+90.00	TBD	TBD
405+00.00	TBD	TBD
405+10.00	TBD	TBD
405+20.00	TBD	TBD
405+30.00	TBD	TBD
405+40.00	TBD	TBD
405+50.00	TBD	TBD
405+60.00	TBD	TBD
405+70.00	TBD	TBD
405+80.00	TBD	TBD
405+90.00	TBD	TBD
406+00.00	TBD	TBD
406+10.00	TBD	TBD
406+20.00	TBD	TBD
406+30.00	TBD	TBD
406+40.00	TBD	TBD
406+50.00	TBD	TBD
406+60.00	TBD	TBD
406+70.00	TBD	TBD

ML I-64 STATION	EASTBOUND ELEVATIONS			
	LT GUTTER ELEV	CROWN ELEV	RAMP BREAK ELEV	RT GUTTER ELEV
406+80.00	TBD	-	-	TBD
406+90.00	TBD	-	-	TBD
407+00.00	TBD	-	-	TBD
407+10.00	TBD	-	-	TBD
407+20.00	TBD	-	-	TBD
407+30.00	TBD	-	-	TBD
407+40.00	TBD	-	TBD	TBD
407+50.00	TBD	-	TBD	TBD
407+60.00	TBD	-	TBD	TBD
407+70.00	TBD	-	TBD	TBD
407+80.00	TBD	-	TBD	TBD
407+90.00	TBD	-	TBD	TBD
408+00.00	TBD	-	TBD	TBD
408+10.00	TBD	-	TBD	TBD
408+20.00	TBD	-	TBD	TBD
408+30.00	TBD	-	TBD	TBD
408+40.00	TBD	-	TBD	TBD
408+50.00	TBD	-	TBD	TBD
408+60.00	TBD	-	TBD	TBD
408+70.00	TBD	-	TBD	TBD
408+80.00	TBD	-	TBD	TBD
408+90.00	TBD	-	TBD	TBD
409+00.00	TBD	-	TBD	TBD
409+10.00	TBD	-	TBD	TBD
409+20.00	TBD	-	TBD	TBD
409+30.00	TBD	-	TBD	TBD
409+34.40	TBD	TBD	TBD	TBD
409+40.00	TBD	TBD	TBD	TBD
409+50.00	TBD	TBD	TBD	TBD
409+60.00	TBD	TBD	TBD	TBD
409+70.00	TBD	TBD	TBD	TBD
409+80.00	TBD	TBD	TBD	TBD
409+90.00	TBD	TBD	TBD	TBD
410+00.00	TBD	TBD	TBD	TBD
410+10.00	TBD	TBD	-	TBD
410+20.00	TBD	TBD	-	TBD
410+30.00	TBD	TBD	-	TBD
410+40.00	TBD	TBD	-	TBD
410+50.00	TBD	TBD	-	TBD
410+60.00	TBD	TBD	-	TBD
410+70.00	TBD	TBD	-	TBD
410+80.00	TBD	TBD	-	TBD
410+90.00	TBD	TBD	-	TBD
411+00.00	TBD	TBD	-	TBD
411+10.00	TBD	TBD	-	TBD
411+20.00	TBD	TBD	-	TBD
411+30.00	TBD	TBD	-	TBD
411+40.00	TBD	TBD	-	TBD
411+50.00	TBD	TBD	-	TBD
411+60.00	TBD	TBD	-	TBD
411+70.00	TBD	TBD	-	TBD
411+80.00	TBD	TBD	-	TBD
411+90.00	TBD	TBD	-	TBD
412+00.00	TBD	TBD	-	TBD
412+10.00	TBD	TBD	-	TBD
412+20.00	TBD	TBD	-	TBD
412+30.00	TBD	TBD	-	TBD
412+40.00	TBD	TBD	-	TBD
412+50.00	TBD	TBD	-	TBD
412+60.00	TBD	TBD	-	TBD

ML I-64 STATION	EASTBOUND ELEVATIONS			
	LT GUTTER ELEV	CROWN ELEV	RAMP BREAK ELEV	RT GUTTER ELEV
412+70.00	TBD	TBD	-	TBD
412+80.00	TBD	TBD	-	TBD
412+90.00	TBD	TBD	-	TBD
413+00.00	TBD	TBD	-	TBD
413+10.00	TBD	TBD	-	TBD
413+20.00	TBD	TBD	-	TBD
413+30.00	TBD	TBD	-	TBD
413+40.00	TBD	TBD	-	TBD
413+50.00	TBD	TBD	-	TBD
413+60.00	TBD	TBD	-	TBD
413+70.00	TBD	TBD	-	TBD
413+80.00	TBD	TBD	-	TBD
413+90.00	TBD	TBD	-	TBD
414+00.00	TBD	TBD	TBD	TBD
414+10.00	TBD	TBD	TBD	TBD
414+20.00	TBD	TBD	TBD	TBD
414+30.00	TBD	TBD	TBD	TBD
414+40.00	TBD	TBD	TBD	TBD
414+50.00	TBD	TBD	TBD	TBD
414+60.00	TBD	TBD	TBD	TBD
414+70.00	TBD	TBD	TBD	TBD
414+80.00	TBD	TBD	TBD	TBD
414+90.00	TBD	TBD	TBD	TBD
415+00.00	TBD	TBD	TBD	TBD
415+10.00	TBD	TBD	TBD	TBD
415+20.00	TBD	TBD	TBD	TBD
415+30.00	TBD	TBD	TBD	TBD
415+40.00	TBD	TBD	TBD	TBD
415+50.00	TBD	TBD	TBD	TBD
415+60.00	TBD	TBD	TBD	TBD
415+70.00	TBD	TBD	TBD	TBD
415+80.00	TBD	TBD	TBD	TBD
415+90.00	TBD	TBD	TBD	TBD
416+00.00	TBD	TBD	TBD	TBD
416+10.00	TBD	TBD	TBD	TBD
416+20.00	TBD	TBD	TBD	TBD
416+30.00	TBD	TBD	TBD	TBD
416+40.00	TBD	TBD	TBD	TBD
416+50.00	TBD	TBD	TBD	TBD
416+60.00	TBD	TBD	TBD	TBD
416+70.00	TBD	TBD	TBD	TBD
416+80.00	TBD	TBD	TBD	TBD
416+90.00	TBD	TBD	TBD	TBD
417+00.00	TBD	TBD	TBD	TBD
417+10.00	TBD	TBD	TBD	TBD
417+20.00	TBD	TBD	-	TBD
417+30.00	TBD	TBD	-	TBD
417+40.00	TBD	TBD	-	TBD
417+50.00	TBD	TBD	-	TBD
417+60.00	TBD	TBD	-	TBD
417+70.00	TBD	TBD	-	TBD
417+80.00	TBD	TBD	-	TBD
417+90.00	TBD	TBD	-	TBD
418+00.00	TBD	TBD	-	TBD
418+10.00	TBD	TBD	-	TBD
418+20.00	TBD	TBD	-	TBD
418+30.00	TBD	TBD	-	TBD
418+40.00	TBD	TBD	-	TBD
418+50.00	TBD	TBD	-	TBD
418+60.00	TBD	TBD	-	TBD

NOTES:

1. FOR GENERAL NOTES, SEE SHEETS X THRU X.
2. FOR GENERAL PLAN, SEE SHEET XX.
3. FOR KEY PLAN, SEE SHEET XX.
4. FOR FRAMING PLAN, SEE SHEET XX.
5. DECK ELEVATIONS ON THIS SHEET ARE SHOWN EVERY 10 FEET ALONG ML I-64, AND AT CRITICAL STATIONS.
6. ELEVATIONS ARE SHOWN TO THE TOP OF THE 8½" CONCRETE DECK.
7. DECK POINTS WITHIN EACH ROW OF THE TABLE ARE RADIAL OR PERPENDICULAR TO ML I-64, AS APPLICABLE.

NO.	REVISION	DATE	BY

WEST VIRGINIA DEPARTMENT OF TRANSPORTATION
DIVISION OF HIGHWAYS
ENGINEERING DIVISION

I-64 OVER KANAWHA RIVER
EUGENE A. CARTER MEMORIAL BRIDGE +3

DECK ELEVATIONS MAINLINE (6 OF 12)

DESIGNED	DATE
DJR	12/25
DRAWN	
SCN	12/25
CHECKED	
REVIEWED	

HDR ENGINEERING INC.
CONSULTING ENGINEERS
CHARLESTON, WV
681-341-6100

SHEET OF

BRIDGE NO. 2563.6

SNOLEN $DD-MMM-YYYY HH:MM$ pw://pwhdruseas02.Intranet.hdr:HDR_US_East_02/Documents/WV_DOT/WVDOT-Eugene_Carter_Bridge_3/6.0_CAD_BIM/6.2_WIP/HDR/6.2.2_Sheet_Files/23_Structure/4.106 Deck Elevations ML

PROJECT NUMBERS		DISTRICT	COUNTY	SHEET NO.	TOTAL
STATE	FEDERAL				
S320-64-57.44 00	NHPP-0064 (497)D	1	KANAWHA		

LOCATION		ML I-64 STATION	LT FASCIA ELEV	LT GUTTER ELEV	GIRDER G1 ELEV	STRINGER S1 ELEV	GIRDER G2 ELEV	STRINGER S2 ELEV	GIRDER G3 ELEV	STRINGER S3 ELEV	GIRDER G4 ELEV	RT GUTTER ELEV	RT FASCIA ELEV	PGL ELEV
CL BRG ABUT AW		400+82.00	665.80	665.93	666.04	666.71	667.38	668.05	668.72	669.39	670.06	670.17	670.30	668.35
SPAN 1 WB	1.10	400+93.55	665.86	665.98	666.10	666.77	667.44	668.11	668.78	669.44	670.11	670.23	670.36	668.41
	1.20	401+05.10	665.91	666.04	666.15	666.82	667.49	668.16	668.83	669.50	670.17	670.28	670.41	668.46
	1.30	401+16.65	665.95	666.08	666.20	666.87	667.54	668.20	668.87	669.54	670.21	670.33	670.45	668.50
	1.40	401+28.20	666.00	666.12	666.24	666.91	667.58	668.25	668.91	669.58	670.25	670.37	670.50	668.55
	1.50	401+39.75	666.03	666.16	666.27	666.94	667.61	668.28	668.95	669.62	670.29	670.40	670.53	668.58
	1.60	401+51.30	666.06	666.19	666.30	666.97	667.64	668.31	668.98	669.65	670.32	670.43	670.56	668.61
	1.70	401+62.85	666.08	666.21	666.33	666.99	667.66	668.33	669.00	669.67	670.34	670.46	670.58	668.63
	1.80	401+74.40	666.10	666.23	666.34	667.01	667.68	668.35	669.02	669.69	670.36	670.47	670.60	668.65
	1.90	401+85.95	666.11	666.24	666.35	667.02	667.69	668.36	669.03	669.70	670.37	670.48	670.61	668.66
CL PIER A1		401+97.50	666.12	666.24	666.36	667.03	667.70	668.37	669.04	669.71	670.37	670.49	670.62	668.67
SPAN 2 WB	2.10	402+12.45	666.12	666.24	666.36	667.03	667.70	668.37	669.04	669.70	670.37	670.49	670.62	668.67
	2.20	402+27.40	666.11	666.23	666.35	667.02	667.69	668.36	669.03	669.69	670.36	670.48	670.61	668.66
	2.30	402+42.35	666.09	666.21	666.33	667.00	667.67	668.34	669.01	669.67	670.34	670.46	670.59	668.64
	2.40	402+57.30	666.06	666.18	666.30	666.97	667.64	668.31	668.98	669.65	670.31	670.43	670.56	668.61
	2.50	402+72.25	666.02	666.15	666.26	666.93	667.60	668.27	668.94	669.61	670.28	670.39	670.52	668.57
	2.60	402+87.20	665.97	666.10	666.21	666.88	667.55	668.22	668.89	669.56	670.23	670.34	670.47	668.52
	2.70	403+02.15	665.91	666.04	666.16	666.82	667.49	668.16	668.83	669.50	670.17	670.29	670.41	668.46
	2.80	403+17.10	665.84	665.97	666.09	666.76	667.43	668.09	668.76	669.43	670.10	670.22	670.34	668.39
	2.90	403+32.05	665.77	665.89	666.01	666.68	667.35	668.02	668.69	669.35	670.02	670.14	670.27	668.32
	CL BRG 2 WB	403+47.00	665.68	665.81	665.92	666.59	667.26	667.93	668.60	669.27	669.94	670.05	670.18	668.23
CL PIER A3		403+48.00	665.67	665.80	665.92	666.59	667.25	667.92	668.59	669.26	669.93	670.05	670.17	668.22
SPAN 3 WB	CL BRG 3 WB	403+49.00	665.67	665.79	665.91	666.58	667.25	667.92	668.59	669.26	669.92	670.04	670.17	668.22
	3.10	403+60.55	665.59	665.72	665.84	666.50	667.17	667.84	668.51	669.18	669.85	669.97	670.09	668.14
	3.20	403+72.10	665.51	665.64	665.76	666.42	667.09	667.76	668.43	669.10	669.77	669.89	670.01	668.06
	3.30	403+83.65	665.43	665.55	665.67	666.34	667.01	667.68	668.34	669.01	669.68	669.80	669.93	667.98
	3.40	403+95.20	665.33	665.46	665.58	666.25	666.92	667.58	668.25	668.92	669.59	669.71	669.83	667.88
	3.50	404+06.75	665.24	665.36	665.48	666.15	666.82	667.49	668.16	668.82	669.49	669.61	669.74	667.79
	3.60	404+18.30	665.13	665.26	665.38	666.05	666.71	667.38	668.05	668.72	669.39	669.51	669.63	667.68
	3.70	404+29.85	665.02	665.15	665.27	665.94	666.61	667.27	667.94	668.61	669.28	669.40	669.52	667.57
	3.80	404+41.40	664.91	665.04	665.15	665.82	666.49	667.16	667.83	668.50	669.17	669.28	669.41	667.46
	3.90	404+52.95	664.79	664.92	665.03	665.70	666.37	667.04	667.71	668.38	669.05	669.16	669.29	667.34
CL PIER A5		404+64.50	664.66	664.79	664.91	665.57	666.24	666.91	667.58	668.25	668.92	669.04	669.16	667.21
SPAN 4 WB	4.10	404+79.45	664.49	664.62	664.73	665.40	666.07	666.74	667.41	668.08	668.75	668.86	668.99	667.04
	4.20	404+94.40	664.31	664.44	664.55	665.22	665.89	666.56	667.23	667.90	668.57	668.68	668.81	666.86
	4.30	405+09.35	664.12	664.24	664.36	665.03	665.70	666.37	667.04	667.71	668.37	668.49	668.62	666.67
	4.40	405+24.30	663.92	664.04	664.16	664.83	665.50	666.17	666.84	667.51	668.17	668.29	668.42	666.47
	4.50	405+39.25	663.71	663.83	663.95	664.62	665.29	665.96	666.63	667.29	667.96	668.08	668.21	666.26
	4.60	405+54.20	663.49	663.61	663.73	664.40	665.07	665.74	666.41	667.07	667.74	667.86	667.99	666.04
	4.70	405+69.15	663.26	663.38	663.50	664.17	664.84	665.51	666.18	666.85	667.51	667.63	667.76	665.81
	4.80	405+84.10	663.02	663.15	663.26	663.93	664.60	665.27	665.94	666.61	667.28	667.39	667.52	665.57
	4.90	405+99.05	662.77	662.90	663.01	663.68	664.35	665.02	665.69	666.36	667.03	667.14	667.27	665.32
	CL BRG 4 WB	406+14.00	662.51	662.64	662.76	663.43	664.09	664.76	665.43	666.10	666.77	666.89	667.01	665.06
CL PIER A7		406+15.00	662.49	662.62	662.74	663.41	664.08	664.74	665.41	666.08	666.75	666.87	666.99	665.04

NOTES:

1. FOR GENERAL NOTES, SEE SHEETS X THRU X.
2. FOR GENERAL PLAN, SEE SHEET XX.
3. FOR KEY PLAN, SEE SHEET XX.
4. FOR FRAMING PLAN, SEE SHEET XX.
5. DECK ELEVATIONS ON THIS SHEET ARE SHOWN AT TENTH POINTS ALONG SPAN BETWEEN CL BEARINGS, AND AT SUBSTRUCTURE UNITS.
6. ELEVATIONS ARE SHOWN TO THE TOP OF THE 8½" CONCRETE DECK.
7. DECK POINTS WITHIN EACH ROW OF THE TABLE ARE RADIAL TO ML I-64, EXCEPT FOR CL BEARINGS ADJACENT TO EXPANSION PIERS, WHERE POINTS ARE PARALLEL TO NEAREST SUBSTRUCTURE UNIT. ML STATIONS, WHERE VARYING, ARE REPORTED AT THE PGL.

NO.	REVISION	DATE	BY

WEST VIRGINIA DEPARTMENT OF TRANSPORTATION
DIVISION OF HIGHWAYS
ENGINEERING DIVISION

I-64 OVER KANAWHA RIVER
EUGENE A. CARTER MEMORIAL BRIDGE +3

DECK ELEVATIONS MAINLINE (7 OF 12)

DESIGNED	DATE
DJR	12/25
DRAWN	
SCN	12/25
CHECKED	
REVIEWED	

HDR ENGINEERING INC.
CONSULTING ENGINEERS
CHARLESTON, WV
681-341-6100

SHEET OF
BRIDGE NO. 2563.6

SNOLEN $DD-MMM-YYYY HH:MM$ pw://pwhdruseas02.intranet.hdr:HDR_US_East_02/Documents/WV_DOT/WVDOT-Eugene_Carter_Bridge_3/6.0_CAD_BIM/6.2_WIP/HDR/6.2.2_Sheet_Files/23_Structure/4.107 Deck Elevations ML

PROJECT NUMBERS		DISTRICT	COUNTY	SHEET NO.	TOTAL
STATE	FEDERAL				
S320-64-57.44 00	NHPP-0064 (497)D	1	KANAWHA		

	LOCATION	BL RAMP C STATION	LT FASCIA ELEV	LT GUTTER ELEV	GIRDER CG1 ELEV	BL RAMP C ELEV	GIRDER CG2 ELEV	GIRDER CG3 ELEV	GIRDER CG4 ELEV	RT GUTTER [C] ELEV	RT FASCIA [C] ELEV	LT FASCIA [ML] ELEV	LT GUTTER [ML] ELEV	GIRDER G1 ELEV	GIRDER G1A ELEV	STRINGER S1 ELEV	GIRDER G2 ELEV	STRINGER S2 ELEV	GIRDER G3 ELEV	STRINGER S3 ELEV	GIRDER G4 ELEV	RT GUTTER ELEV	RT FASCIA ELEV	PGL ELEV	ML I-64 STATION	LOCATION	
	CL PIER C8	12+47.50	658.12	658.21	658.28	658.50	658.65	659.01	659.37	659.45	659.54	662.49	662.62	662.74	663.31	663.88	664.46	665.03	665.60	666.18	666.75	666.87	666.99	667.14	406+15.00	CL PIER A7	
SPAN CA	CL BRG CA	12+46.50	658.08	658.17	658.25	658.47	658.61	658.98	659.35	659.42	659.51	662.48	662.60	662.72	663.29	663.87	664.44	665.01	665.59	666.16	666.73	666.85	666.98	667.13	406+16.00	CL BRG 5 WB	SPAN 5 WB
	CA.10	12+34.86	657.68	657.77	657.85	658.09	658.25	658.64	659.04	659.12	659.22	662.20	662.33	662.44	663.02	663.59	664.16	664.74	665.31	665.88	666.46	666.57	666.70	666.85	406+31.40	5.10	
	CA.20	12+23.21	657.32	657.42	657.51	657.77	657.93	658.36	658.78	658.87	658.97	661.91	662.04	662.16	662.73	663.30	663.88	664.45	665.02	665.60	666.17	666.29	666.41	666.56	406+46.80	5.20	
	CA.30	12+11.57	657.01	657.12	657.21	657.49	657.67	658.12	658.58	658.67	658.78	661.61	661.74	661.86	662.43	663.00	663.58	664.15	664.72	665.30	665.87	665.99	666.11	666.26	406+62.20	5.30	
	CA.40	11+99.92	656.75	656.87	656.97	657.26	657.45	657.94	658.42	658.52	658.64	661.31	661.43	661.55	662.12	662.70	663.27	663.84	664.42	664.99	665.56	665.68	665.81	665.96	406+77.60	5.40	
	CA.50	11+88.28	656.55	656.67	656.78	657.09	657.28	657.79	658.30	-	-	660.99	661.11	661.23	661.80	662.38	662.95	663.52	664.10	664.67	665.24	665.36	665.49	665.64	406+93.00	5.50	
	CA.60	11+76.63	656.43	656.54	656.65	656.96	657.16	657.66	658.17	-	-	-	-	660.90	661.48	662.05	662.62	663.20	663.77	664.34	664.92	665.03	665.16	665.31	407+08.40	5.60	
	CA.70	11+64.99	656.35	656.47	656.57	656.88	657.08	657.59	658.09	-	-	-	-	660.70	661.24	661.79	662.33	662.88	663.42	663.97	664.52	664.63	664.75	664.89	407+23.80	5.70	
	CA.80	11+53.34	656.32	656.44	656.55	656.86	657.05	657.56	658.06	-	-	-	-	660.49	661.00	661.52	662.04	662.55	663.07	663.59	664.10	664.21	664.32	664.46	407+39.20	5.80	
	CA.90	11+41.70	656.34	656.46	656.57	656.88	657.08	657.58	-	-	-	-	-	660.27	660.76	661.24	661.73	662.22	662.70	663.19	663.68	663.78	663.88	664.01	407+54.60	5.90	
	CL PIER A	11+30.06	656.40	656.53	656.63	656.95	657.15	-	-	-	-	-	-	660.04	660.50	660.95	661.41	661.87	662.33	662.78	663.24	663.34	663.44	663.56	407+70.00	CL PIER A	
SPAN 6 WB	6.10	11+16.30	656.54	656.65	656.76	657.07	657.26	-	-	-	-	-	-	659.81	660.24	660.67	661.10	661.53	661.96	662.39	662.82	662.91	663.00	663.12	407+84.55	6.10	SPAN 6 WB
	6.20	11+02.51	656.69	656.80	656.90	657.18	657.36	-	-	-	-	-	-	659.58	659.98	660.38	660.78	661.19	661.59	661.99	662.39	662.47	662.56	662.67	407+99.10	6.20	
	6.30	10+88.68	656.81	656.91	657.00	657.26	657.43	-	-	-	-	-	-	659.33	659.71	660.08	660.46	660.83	661.21	661.58	661.95	662.03	662.11	662.21	408+13.65	6.30	
	6.40	10+74.80	656.87	656.96	657.04	657.28	657.43	-	-	-	-	-	-	659.08	659.43	659.77	660.12	660.47	660.81	661.16	661.51	661.58	661.65	661.74	408+28.20	6.40	
	6.50	10+60.88	656.87	656.95	657.02	657.24	-	-	-	-	-	-	-	658.82	659.14	659.46	659.78	660.09	660.41	660.73	661.05	661.11	661.18	661.27	408+42.75	6.50	
	6.60	10+46.90	656.80	656.87	656.94	657.13	-	-	-	-	-	-	-	658.55	658.84	659.13	659.42	659.71	660.00	660.29	660.58	660.64	660.71	660.78	408+57.30	6.60	
	6.70	10+32.88	656.67	656.73	656.79	656.96	-	-	-	-	-	-	-	658.27	658.53	658.79	659.06	659.32	659.58	659.85	660.11	660.16	660.22	660.29	408+71.85	6.70	
	6.80	10+18.81	656.47	656.53	656.58	656.73	-	-	-	-	-	-	-	657.98	658.21	658.45	658.68	658.92	659.15	659.39	659.62	659.67	659.72	659.79	408+86.40	6.80	
	6.90	10+04.68	656.21	656.26	656.30	656.43	-	-	-	-	-	-	-	657.68	657.89	658.10	658.30	658.51	658.72	658.92	659.13	659.17	659.22	659.27	409+00.95	6.90	
	6.99	9+91.63	655.94	655.98	656.02	656.12	-	-	-	-	-	-	-	657.40	657.58	657.75	657.93	658.11	658.28	658.46	658.63	658.67	658.71	658.75	409+15.48	CL BRG 6 WB	
	CL PIER B	9+87.62	655.86	655.89	655.93	656.03	-	-	-	-	-	-	-	657.31	657.48	657.65	657.82	657.99	658.16	658.33	658.49	658.53	658.57	658.61	409+19.48	CL PIER B	

NOTES:

1. FOR GENERAL NOTES, SEE SHEETS X THRU X.
2. FOR GENERAL PLAN, SEE SHEET XX.
3. FOR KEY PLAN, SEE SHEET XX.
4. FOR FRAMING PLANS, SEE SHEET XX AND XX.
5. DECK ELEVATIONS ON THIS SHEET ARE SHOWN AT TENTH POINTS ALONG SPAN BETWEEN CL BEARINGS, AND AT SUBSTRUCTURE UNITS.
6. ELEVATIONS ARE SHOWN TO THE TOP OF THE 8½" CONCRETE DECK.
7. DECK POINTS ON MAINLINE I-64 WITHIN EACH ROW OF THE TABLE ARE RADIAL TO ML I-64, EXCEPT FOR CL BEARINGS ADJACENT TO EXPANSION PIERS, WHERE POINTS ARE PARALLEL TO NEAREST SUBSTRUCTURE UNIT. ML STATIONS, WHERE VARYING, ARE REPORTED AT THE PGL.
8. DECK POINTS IN SPAN CA ARE RADIAL TO BL RAMP C UP TO PIER A, AND THEN AS DESCRIBED IN NOTE 7. RAMP C STATIONS, WHERE VARYING, ARE REPORTED AT BL RAMP C.
9. DIRECTION OF RAMP C STATIONING IS OPPOSITE THAT OF MAINLINE I-64 STATIONING.

NO.	REVISION	DATE	BY

WEST VIRGINIA DEPARTMENT OF TRANSPORTATION
DIVISION OF HIGHWAYS
ENGINEERING DIVISION

I-64 OVER KANAWHA RIVER
EUGENE A. CARTER MEMORIAL BRIDGE +3

DECK ELEVATIONS MAINLINE (8 OF 12)

DESIGNED	DATE
DJR	12/25
DRAWN	
SCN	12/25
CHECKED	
REVIEWED	

HDR ENGINEERING INC.
CONSULTING ENGINEERS
CHARLESTON, WV
681-341-6100

SHEET OF

BRIDGE NO. 2563.6

SNOLEN $DD-MMM-YYYY HH:MM$ pw://pwhdruseas02.intranet.hdr:HDR_US_East_02/Documents/WV_DOT/WVDOT-Eugene_Carter_Bridge_3/6.0_CAD_BIM/6.2_WIP/HDR/6.2.2_Sheet_Files/23_Structure/4.108 Deck Elevations ML

PROJECT NUMBERS		DISTRICT	COUNTY	SHEET NO.	TOTAL
STATE	FEDERAL				
S320-64-57.44 00	NHPP-0064 (497)D	1	KANAWHA		

	LOCATION	ML I-64 STATION	LT FASCIA ELEV	LT GUTTER ELEV	STRINGER S1 ELEV	STRINGER S2 ELEV	STRINGER S3 ELEV	BREAK PT ELEV	STRINGER S4 ELEV	STRINGER S5 ELEV	STRINGER S6 ELEV	CROWN ELEV	STRINGER S7 ELEV	STRINGER S8 ELEV	STRINGER S9 ELEV	RT GUTTER ELEV	RT GUTTER ELEV	PGL ELEV
	CL PIER B	409+19.48	657.09	657.13	657.17	657.33	657.50	657.55	657.67	657.83	658.00	658.12	658.17	658.33	658.50	658.53	658.57	657.69
SPAN 7 WB	CL BRG 7 WB	409+19.98	657.08	657.12	657.16	657.32	657.49	657.54	657.66	657.82	657.99	658.10	658.15	658.31	658.48	658.51	658.55	657.67
	7.05	409+43.25	656.52	656.55	656.58	656.72	656.86	656.90	657.00	657.14	657.28	657.38	657.42	657.54	657.67	657.69	657.72	656.96
	7.10	409+66.50	655.81	655.85	655.87	656.01	656.16	656.20	656.30	656.44	656.58	656.68	656.70	656.78	656.86	656.88	656.90	656.26
	7.15	409+89.75	655.11	655.14	655.17	655.31	655.45	655.49	655.59	655.73	655.87	655.97	655.98	656.02	656.05	656.06	656.07	655.55
	7.20	410+13.00	654.40	654.43	654.46	654.60	654.74	654.78	654.88	655.02	655.16	655.26	655.26	655.25	655.25	655.25	655.24	654.84
	7.25	410+36.25	653.69	653.73	653.75	653.89	654.04	654.08	654.18	654.32	654.46	654.56	654.54	654.49	654.44	654.43	654.42	654.14
	7.30	410+59.50	652.99	653.02	653.05	653.19	653.33	653.37	653.47	653.61	653.75	653.85	653.82	653.73	653.63	653.62	653.59	653.43
	7.35	410+82.75	652.28	652.31	652.34	652.48	652.62	652.66	652.76	652.90	653.04	653.14	653.10	652.96	652.83	652.80	652.77	652.72
	7.40	411+06.00	651.57	651.60	651.63	651.77	651.91	651.96	652.06	652.20	652.34	652.44	652.39	652.25	652.11	652.08	652.05	652.02
	7.45	411+29.25	650.87	650.90	650.93	651.07	651.21	651.25	651.35	651.49	651.63	651.73	651.69	651.55	651.41	651.38	651.35	651.31
	7.50	411+52.50	650.16	650.19	650.22	650.36	650.50	650.54	650.64	650.78	650.92	651.02	650.98	650.84	650.70	650.67	650.64	650.60
	7.55	411+75.75	649.45	649.48	649.51	649.65	649.79	649.84	649.93	650.08	650.22	650.32	650.27	650.13	649.99	649.96	649.93	649.90
	7.60	411+99.00	648.75	648.78	648.81	648.95	649.09	649.13	649.23	649.37	649.51	649.61	649.57	649.43	649.29	649.26	649.23	649.19
	7.65	412+22.25	648.04	648.07	648.10	648.24	648.38	648.42	648.52	648.66	648.80	648.90	648.86	648.72	648.58	648.55	648.52	648.48
	7.70	412+45.50	647.33	647.36	647.39	647.53	647.67	647.71	647.81	647.95	648.10	648.19	648.15	648.01	647.87	647.84	647.81	647.77
	7.75	412+68.75	646.63	646.66	646.69	646.83	646.97	647.01	647.11	647.25	647.39	647.49	647.45	647.31	647.17	647.14	647.11	647.07
	7.80	412+92.00	645.92	645.95	645.98	646.12	646.26	646.30	646.40	646.54	646.68	646.78	646.74	646.60	646.46	646.43	646.40	646.36
	7.85	413+15.25	645.21	645.24	645.27	645.41	645.55	645.59	645.69	645.83	645.97	646.07	646.03	645.89	645.75	645.72	645.69	645.65
	7.90	413+38.50	644.50	644.54	644.56	644.71	644.85	644.89	644.99	645.13	645.27	645.37	645.33	645.19	645.04	645.02	644.98	644.95
	7.95	413+61.75	643.80	643.83	643.86	644.00	644.14	644.18	644.28	644.42	644.56	644.66	644.62	644.48	644.34	644.31	644.28	644.24
	CL BRG 7 WB	413+85.00	643.09	643.12	643.15	643.29	643.43	643.47	643.57	643.71	643.85	643.95	643.91	643.77	643.63	643.60	643.57	643.53
	CL PIER C	413+85.50	643.08	643.11	643.14	643.28	643.42	643.46	643.56	643.70	643.84	643.94	643.90	643.76	643.62	643.59	643.56	643.52

NOTES:

1. FOR GENERAL NOTES, SEE SHEETS X THRU X.
2. FOR GENERAL PLAN, SEE SHEET XX.
3. FOR KEY PLAN, SEE SHEET XX.
4. FOR FRAMING PLAN, SEE SHEET XX.
5. DECK ELEVATIONS ON THIS SHEET ARE SHOWN AT TENTH POINTS ALONG SPAN BETWEEN CL BEARINGS, AND AT SUBSTRUCTURE UNITS.
6. ELEVATIONS ARE SHOWN TO THE TOP OF THE 8½" CONCRETE DECK.
7. DECK POINTS WITHIN EACH ROW OF THE TABLE ARE PERPENDICULAR TO ML I-64 BEYOND ST STA 410+09.40. STATIONS FOR POINTS BEFORE THE ST STATION ARE REPORTED AT THE PGL.

NO.	REVISION	DATE	BY

WEST VIRGINIA DEPARTMENT OF TRANSPORTATION
DIVISION OF HIGHWAYS
ENGINEERING DIVISION

I-64 OVER KANAWHA RIVER
EUGENE A. CARTER MEMORIAL BRIDGE +3

DECK ELEVATIONS MAINLINE (9 OF 12)

DESIGNED	DJR
DATE	12/25
DRAWN	SCN
DATE	12/25
CHECKED	
REVIEWED	

HDR ENGINEERING INC.
CONSULTING ENGINEERS
CHARLESTON, WV
681-341-6100

SHEET OF

BRIDGE NO. 2563.6

SNOLEN $DD-MMM-YYYY HH:MM$ pw://pwhdruseas02.Intranet.hdr:HDR_US_East_02/Documents/WV_DOT/WVDOT-Eugene_Carter_Bridge_3/6.0_CAD_BIM/6.2_WIP/HDR/6.2.2_Sheet_Files/23_Structure/4.109 Deck Elevations ML

PROJECT NUMBERS		DISTRICT	COUNTY	SHEET NO.	TOTAL
STATE	FEDERAL				
S320-64-57.44 00	NHPP-0064 (497)D	1	KANAWHA		

	LOCATION	ML I-64 STATION	LT FASCIA ELEV	LT GUTTER ELEV	GIRDER G1 ELEV	GIRDER G2 ELEV	STRINGER S1 ELEV	STRINGER S2 ELEV	GIRDER G3 ELEV	STRINGER S3 ELEV	GIRDER G4 ELEV	STRINGER S4 ELEV	CROWN ELEV	GIRDER G5 ELEV	STRINGER S5 ELEV	GIRDER G6 ELEV	RT GUTTER ELEV	RT FASCIA ELEV	PGL ELEV
	CL PIER C	413+85.50	643.08	643.11	643.14	643.28	-	-	643.42	643.56	643.70	643.84	643.94	643.90	643.76	643.62	643.59	643.56	643.52
SPAN 8 WB	CL BRG 8 WB	413+89.50	642.95	642.99	643.01	643.15	-	-	643.30	643.44	643.58	643.72	643.82	643.78	643.63	643.49	643.47	643.43	643.40
SPAN 8 WB	8.10	414+01.40	642.59	642.62	642.65	642.79	-	-	642.93	643.07	643.21	643.36	643.45	643.41	643.27	643.13	643.10	643.07	643.03
SPAN 8 WB	8.20	414+13.30	642.23	642.26	642.29	642.43	-	-	642.57	642.71	642.85	642.99	643.09	643.05	642.91	642.77	642.74	642.71	642.67
SPAN 8 WB	8.30	414+25.20	641.87	641.90	641.93	642.07	-	-	642.21	642.35	642.49	642.63	642.73	642.69	642.55	642.41	642.38	642.35	642.31
SPAN 8 WB	8.40	414+37.10	641.50	641.53	641.56	641.70	-	-	641.85	641.99	642.13	642.27	642.37	642.33	642.19	642.05	642.02	641.99	641.95
SPAN 8 WB	8.50	414+49.00	641.13	641.17	641.19	641.34	-	-	641.49	641.63	641.77	641.91	642.01	641.97	641.83	641.69	641.66	641.63	641.59
SPAN 8 WB	8.60	414+60.90	640.77	640.80	640.83	640.97	-	641.03	641.12	641.27	641.41	641.55	641.65	641.60	641.46	641.32	641.30	641.26	641.23
SPAN 8 WB	8.70	414+72.80	640.40	640.43	640.46	640.60	-	640.66	640.76	640.90	641.04	641.18	641.28	641.24	641.10	640.96	640.93	640.90	640.86
SPAN 8 WB	8.80	414+84.70	640.03	640.06	640.09	640.23	-	640.30	640.40	640.54	640.68	640.82	640.92	640.88	640.74	640.60	640.57	640.54	640.50
SPAN 8 WB	8.90	414+96.60	639.66	639.69	639.72	639.86	-	639.93	640.04	640.18	640.32	640.46	640.56	640.52	640.38	640.24	640.21	640.18	640.14
	CL PIER D	415+08.50	639.29	639.32	639.35	639.49	-	639.57	639.68	639.82	639.96	640.10	640.20	640.16	640.02	639.88	639.85	639.82	639.78
SPAN 9 WB	9.10	415+20.40	638.91	638.94	638.97	639.11	-	639.21	639.32	639.46	639.60	639.74	639.84	639.80	639.66	639.51	639.49	639.45	639.42
SPAN 9 WB	9.20	415+32.30	638.54	638.57	638.60	638.74	-	638.85	638.95	639.09	639.24	639.38	639.48	639.43	639.29	639.15	639.12	639.09	639.06
SPAN 9 WB	9.30	415+44.20	638.16	638.19	638.22	638.36	-	638.49	638.59	638.73	638.87	639.01	639.11	639.07	638.93	638.79	638.76	638.73	638.69
SPAN 9 WB	9.40	415+56.10	637.78	637.81	637.84	637.98	638.01	638.13	638.23	638.37	638.51	638.65	638.75	638.71	638.57	638.43	638.40	638.37	638.33
SPAN 9 WB	9.50	415+68.00	637.40	637.44	637.46	637.60	637.66	637.76	637.87	638.01	638.15	638.29	638.39	638.35	638.21	638.07	638.04	638.01	637.97
SPAN 9 WB	9.60	415+79.90	637.02	637.06	637.08	637.22	637.30	637.40	637.51	637.65	637.79	637.93	638.03	637.99	637.85	637.71	637.68	637.65	637.61
SPAN 9 WB	9.70	415+91.80	636.64	636.67	636.70	636.84	636.94	637.04	637.15	637.29	637.43	637.57	637.67	637.63	637.48	637.34	637.32	637.28	637.25
SPAN 9 WB	9.80	416+03.70	636.26	636.29	636.32	636.46	636.57	636.68	636.78	636.92	637.06	637.21	637.30	637.26	637.12	636.98	636.95	636.92	636.88
SPAN 9 WB	9.90	416+15.60	635.88	635.91	635.94	636.08	636.21	636.32	636.42	636.56	636.70	636.84	636.94	636.90	636.76	636.62	636.59	636.56	636.52
	CL BRG 9 WB	416+27.50	635.49	635.52	635.55	635.69	635.85	635.95	636.06	636.20	636.34	636.48	636.58	636.54	636.40	636.26	636.23	636.20	636.16
	CL PIER E	416+28.50	635.46	635.49	635.52	635.66	635.82	635.92	636.03	636.17	636.31	636.45	636.55	636.51	636.37	636.23	636.20	636.17	636.13

NOTES:

1. FOR GENERAL NOTES, SEE SHEETS X THRU X.
2. FOR GENERAL PLAN, SEE SHEET XX.
3. FOR KEY PLAN, SEE SHEET XX.
4. FOR FRAMING PLAN, SEE SHEET XX.
5. DECK ELEVATIONS ON THIS SHEET ARE SHOWN AT TENTH POINTS ALONG SPAN BETWEEN CL BEARINGS, AND AT SUBSTRUCTURE UNITS.
6. ELEVATIONS ARE SHOWN TO THE TOP OF THE 8½" CONCRETE DECK.
7. DECK POINTS WITHIN EACH ROW OF THE TABLE ARE PERPENDICULAR TO ML I-64.

NO.	REVISION	DATE	BY

WEST VIRGINIA DEPARTMENT OF TRANSPORTATION
DIVISION OF HIGHWAYS
ENGINEERING DIVISION

I-64 OVER KANAWHA RIVER
EUGENE A. CARTER MEMORIAL BRIDGE +3

DECK ELEVATIONS MAINLINE (10 OF 12)

DESIGNED	DATE
DJR	12/25
DRAWN	
SCN	12/25
CHECKED	
REVIEWED	

HDR ENGINEERING INC.
CONSULTING ENGINEERS
CHARLESTON, WV
681-341-6100

SHEET OF
BRIDGE NO. 2563.6

SNOLEN $DD-MMM-YYYY HH:MM$ pw://pwhdruseas02.intranet.hdr:HDR_US_East_02/Documents/WV_DOT/WVDOT-Eugene_Carter_Bridge_3/6.0_CAD_BIM/6.2_WIP/HDR/6.2.2_Sheet_Files/23_Structure/4.110 Deck Elevations ML

PROJECT NUMBERS		DISTRICT	COUNTY	SHEET NO.	TOTAL
STATE	FEDERAL				
S320-64-57.44 00	NHPP-0064 (497)D	1	KANAWHA		

	LOCATION	BL RAMP E STATION	LT FASCIA ELEV	LT GUTTER ELEV	GIRDER EG1 ELEV	BL RAMP E ELEV	STRINGER ES1 ELEV	STRINGER ES2 ELEV	GIRDER EG2 ELEV	RT GUTTER [E] ELEV	RT FASCIA [E] ELEV	LT FASCIA [ML] ELEV	LT GUTTER [ML] ELEV	GIRDER G1 ELEV	GIRDER G2 ELEV	STRINGER S1 ELEV	GIRDER G3 ELEV	STRINGER S2 ELEV	CROWN ELEV	GIRDER G4 ELEV	GIRDER S3 ELEV	GIRDER G5 ELEV	RT GUTTER ELEV	RT FASCIA ELEV	PGL ELEV	ML I-64 STATION	LOCATION	
	CL PIER E	7+71.24	635.31	635.35	635.38	635.49	635.56	635.73	-	-	-	-	-	635.87	636.01	636.16	636.30	636.44	636.55	636.52	636.37	636.23	636.20	636.17	636.13	416+28.50	CL PIER E	
SPAN DE	CL BRG DE	7+70.24	635.27	635.31	635.34	635.45	635.52	635.69	-	-	-	-	-	635.84	635.98	636.13	636.27	636.41	636.52	636.49	636.34	636.20	636.17	636.14	636.10	416+29.50	CL BRG 10 WB	
	DE.10	7+58.75	634.83	634.86	634.90	634.99	635.04	635.19	-	-	-	-	-	635.49	635.63	635.78	635.92	636.06	636.17	636.14	635.99	635.85	635.82	635.79	635.75	416+40.98	10.10	
	DE.20	7+47.27	634.32	634.35	634.38	634.47	634.53	634.68	-	-	-	-	-	635.14	635.28	635.43	635.57	635.71	635.82	635.79	635.64	635.50	635.47	635.44	635.40	416+52.45	10.20	
	DE.30	7+35.79	633.76	633.79	633.82	633.92	633.97	634.12	-	-	-	-	-	634.79	634.94	635.08	635.22	635.37	635.47	635.44	635.30	635.15	635.12	635.09	635.05	416+63.93	10.30	SPAN 10 WB
	DE.40	7+24.31	633.15	633.19	633.22	633.31	633.37	633.51	633.66	-	-	-	-	634.44	634.59	634.73	634.87	635.02	635.12	635.09	634.95	634.80	634.77	634.74	634.70	416+75.40	10.40	
	DE.50	7+12.83	632.50	632.53	632.56	632.65	632.71	632.86	633.01	-	-	-	-	634.09	634.24	634.38	634.52	634.67	634.78	634.74	634.60	634.45	634.43	634.39	634.36	416+86.88	10.50	
	DE.60	7+01.35	631.79	631.83	631.86	631.95	632.01	632.16	632.31	632.34	632.37	633.68	633.72	633.75	633.89	634.03	634.18	634.32	634.43	634.39	634.25	634.11	634.08	634.04	634.01	416+98.35	10.60	
	DE.70	6+89.87	631.07	631.10	631.13	631.21	631.26	631.38	631.51	631.53	631.56	633.34	633.37	633.40	633.54	633.68	633.83	633.97	634.08	634.04	633.90	633.76	633.73	633.70	633.66	417+09.83	10.70	
	DE.80	6+78.39	630.36	630.38	630.40	630.45	630.49	630.58	630.68	630.70	630.72	632.99	633.02	633.05	633.19	633.33	633.48	633.62	633.73	633.69	633.55	633.41	633.38	633.35	633.31	417+21.30	10.80	
	DE.90	6+66.91	629.64	629.65	629.66	629.70	629.73	629.79	629.85	629.86	629.88	632.64	632.67	632.70	632.84	632.99	633.13	633.27	633.38	633.35	633.20	633.06	633.03	633.00	632.96	417+32.78	10.90	
	CL PIER EA	6+55.43	628.92	628.93	628.93	628.95	628.96	628.99	629.02	629.03	629.03	632.29	632.32	632.35	632.49	632.64	632.78	632.92	633.03	633.00	632.85	632.71	632.68	632.65	632.61	417+44.25	CL PIER M	
												631.94	631.97	632.00	632.14	632.29	632.43	632.57	632.68	632.65	632.50	632.36	632.33	632.30	632.26	417+55.73	11.10	
												631.59	631.62	631.65	631.80	631.94	632.08	632.23	632.33	632.30	632.16	632.01	631.98	631.95	631.91	417+67.20	11.20	
												631.24	631.27	631.30	631.45	631.59	631.73	631.88	631.99	631.95	631.81	631.66	631.63	631.60	631.57	417+78.68	11.30	
												630.89	630.93	630.95	631.10	631.24	631.38	631.53	631.64	631.60	631.46	631.31	631.29	631.25	631.22	417+90.15	11.40	
												630.54	630.58	630.61	630.75	630.89	631.04	631.18	631.29	631.25	631.11	630.97	630.94	630.90	630.87	418+01.63	11.50	
												630.20	630.23	630.26	630.40	630.54	630.69	630.83	630.94	630.90	630.76	630.62	630.59	630.56	630.52	418+13.10	11.60	
												629.85	629.88	629.91	630.05	630.19	630.34	630.48	630.59	630.55	630.41	630.27	630.24	630.21	630.17	418+24.58	11.70	
												629.50	629.53	629.56	629.70	629.85	629.99	630.13	630.24	630.21	630.06	629.92	629.89	629.86	629.82	418+36.05	11.80	
												629.15	629.18	629.21	629.35	629.50	629.64	629.78	629.89	629.86	629.71	629.57	629.54	629.51	629.47	418+47.53	11.90	SPAN 11 WB
												628.80	628.83	628.86	629.00	629.15	629.29	629.43	629.54	629.51	629.36	629.22	629.19	629.16	629.12	418+59.00	CL BRG 11 WB	
												628.77	628.80	628.83	628.97	629.12	629.26	629.40	629.51	629.48	629.33	629.19	629.16	629.13	629.09	418+60.00	CL PIER R1	

NOTES:

1. FOR GENERAL NOTES, SEE SHEETS X THRU X.
2. FOR GENERAL PLAN, SEE SHEET XX.
3. FOR KEY PLAN, SEE SHEET XX.
4. FOR FRAMING PLAN, SEE SHEET XX.
5. DECK ELEVATIONS ON THIS SHEET ARE SHOWN AT TENTH POINTS ALONG SPAN BETWEEN CL BEARINGS, AND AT SUBSTRUCTURE UNITS.
6. ELEVATIONS ARE SHOWN TO THE TOP OF THE 8½" CONCRETE DECK.
7. DECK POINTS ON MAINLINE I-64 WITHIN EACH ROW OF THE TABLE ARE PERPENDICULAR TO ML I-64.
8. DECK POINTS IN SPAN DE ARE RADIAL OR PERPENDICULAR TO BL RAMP D, AS APPLICABLE, EXCEPT AT PIER C AND ADJACENT BEARINGS FOR SPAN DE. RAMP D STATIONS, WHERE VARYING, ARE REPORTED AT BL RAMP D.
9. DIRECTION OF RAMP D STATIONING IS OPPOSITE THAT OF MAINLINE I-64 STATIONING.

NO.	REVISION	DATE	BY

WEST VIRGINIA DEPARTMENT OF TRANSPORTATION
DIVISION OF HIGHWAYS
ENGINEERING DIVISION

I-64 OVER KANAWHA RIVER
EUGENE A. CARTER MEMORIAL BRIDGE +3

DECK ELEVATIONS MAINLINE (11 OF 12)

DESIGNED	DATE
DJR	12/25
DRAWN	
SCN	12/25
CHECKED	
REVIEWED	

HDR ENGINEERING INC.
CONSULTING ENGINEERS
CHARLESTON, WV
681-341-6100

SHEET OF
BRIDGE NO. 2563.6

SNOLEN $DD-MMM-YYYY HH:MM$ pw://pwhdruseas02.intranet.hdr:HDR_US_East_02/Documents/WV_DOT/WVDOT-Eugene_Carter_Bridge_3/6.0_CAD_BIM/6.2_WIP/HDR/6.2.2_Sheet_Files/23_Structure/4.111 Deck Elevations ML

PROJECT NUMBERS		DISTRICT	COUNTY	SHEET NO.	TOTAL
STATE	FEDERAL				
S320-64-57.44 00	NHPP-0064 (497)D	1	KANAWHA		

ML I-64 STATION	WESTBOUND ELEVATIONS	
	LT GUTTER ELEV	RT GUTTER ELEV
400+82.00	TBD	TBD
400+90.00	TBD	TBD
401+00.00	TBD	TBD
401+10.00	TBD	TBD
401+20.00	TBD	TBD
401+30.00	TBD	TBD
401+40.00	TBD	TBD
401+50.00	TBD	TBD
401+60.00	TBD	TBD
401+70.00	TBD	TBD
401+80.00	TBD	TBD
401+90.00	TBD	TBD
402+00.00	TBD	TBD
402+10.00	TBD	TBD
402+20.00	TBD	TBD
402+30.00	TBD	TBD
402+40.00	TBD	TBD
402+50.00	TBD	TBD
402+60.00	TBD	TBD
402+70.00	TBD	TBD
402+80.00	TBD	TBD
402+90.00	TBD	TBD
403+00.00	TBD	TBD
403+10.00	TBD	TBD
403+20.00	TBD	TBD
403+30.00	TBD	TBD
403+40.00	TBD	TBD
403+50.00	TBD	TBD
403+60.00	TBD	TBD
403+70.00	TBD	TBD
403+80.00	TBD	TBD
403+90.00	TBD	TBD
404+00.00	TBD	TBD
404+10.00	TBD	TBD
404+20.00	TBD	TBD
404+30.00	TBD	TBD
404+40.00	TBD	TBD
404+50.00	TBD	TBD
404+60.00	TBD	TBD
404+70.00	TBD	TBD
404+80.00	TBD	TBD
404+90.00	TBD	TBD
405+00.00	TBD	TBD
405+10.00	TBD	TBD
405+20.00	TBD	TBD
405+30.00	TBD	TBD
405+40.00	TBD	TBD
405+50.00	TBD	TBD
405+60.00	TBD	TBD
405+70.00	TBD	TBD
405+80.00	TBD	TBD
405+90.00	TBD	TBD
406+00.00	TBD	TBD
406+10.00	TBD	TBD
406+20.00	TBD	TBD
406+30.00	TBD	TBD
406+40.00	TBD	TBD
406+50.00	TBD	TBD
406+60.00	TBD	TBD
406+70.00	TBD	TBD

ML I-64 STATION	WESTBOUND ELEVATIONS			
	LT GUTTER ELEV	RAMP BREAK ELEV	CROWN ELEV	RT GUTTER ELEV
406+80.00	TBD	-	-	TBD
406+90.00	TBD	TBD	-	TBD
407+00.00	TBD	TBD	-	TBD
407+10.00	TBD	TBD	-	TBD
407+20.00	TBD	TBD	-	TBD
407+30.00	TBD	TBD	-	TBD
407+40.00	TBD	TBD	-	TBD
407+50.00	TBD	TBD	-	TBD
407+60.00	TBD	TBD	-	TBD
407+70.00	TBD	TBD	-	TBD
407+80.00	TBD	TBD	-	TBD
407+90.00	TBD	TBD	-	TBD
408+00.00	TBD	TBD	-	TBD
408+10.00	TBD	TBD	-	TBD
408+20.00	TBD	TBD	-	TBD
408+30.00	TBD	TBD	-	TBD
408+40.00	TBD	TBD	-	TBD
408+50.00	TBD	TBD	-	TBD
408+60.00	TBD	TBD	-	TBD
408+70.00	TBD	TBD	-	TBD
408+80.00	TBD	TBD	-	TBD
408+90.00	TBD	TBD	-	TBD
409+00.00	TBD	TBD	-	TBD
409+10.00	TBD	TBD	-	TBD
409+20.00	TBD	TBD	-	TBD
409+30.00	TBD	TBD	-	TBD
409+34.40	TBD	TBD	TBD	TBD
409+40.00	TBD	TBD	TBD	TBD
409+50.00	TBD	TBD	TBD	TBD
409+60.00	TBD	TBD	TBD	TBD
409+70.00	TBD	TBD	TBD	TBD
409+80.00	TBD	TBD	TBD	TBD
409+90.00	TBD	TBD	TBD	TBD
410+00.00	TBD	TBD	TBD	TBD
410+10.00	TBD	-	TBD	TBD
410+20.00	TBD	-	TBD	TBD
410+30.00	TBD	-	TBD	TBD
410+40.00	TBD	-	TBD	TBD
410+50.00	TBD	-	TBD	TBD
410+60.00	TBD	-	TBD	TBD
410+70.00	TBD	-	TBD	TBD
410+80.00	TBD	-	TBD	TBD
410+90.00	TBD	-	TBD	TBD
411+00.00	TBD	-	TBD	TBD
411+10.00	TBD	-	TBD	TBD
411+20.00	TBD	-	TBD	TBD
411+30.00	TBD	-	TBD	TBD
411+40.00	TBD	-	TBD	TBD
411+50.00	TBD	-	TBD	TBD
411+60.00	TBD	-	TBD	TBD
411+70.00	TBD	-	TBD	TBD
411+80.00	TBD	-	TBD	TBD
411+90.00	TBD	-	TBD	TBD
412+00.00	TBD	-	TBD	TBD
412+10.00	TBD	-	TBD	TBD
412+20.00	TBD	-	TBD	TBD
412+30.00	TBD	-	TBD	TBD
412+40.00	TBD	-	TBD	TBD
412+50.00	TBD	-	TBD	TBD
412+60.00	TBD	-	TBD	TBD

ML I-64 STATION	WESTBOUND ELEVATIONS			
	LT GUTTER ELEV	RAMP BREAK ELEV	CROWN ELEV	RT GUTTER ELEV
412+70.00	TBD	-	TBD	TBD
412+80.00	TBD	-	TBD	TBD
412+90.00	TBD	-	TBD	TBD
413+00.00	TBD	-	TBD	TBD
413+10.00	TBD	-	TBD	TBD
413+20.00	TBD	-	TBD	TBD
413+30.00	TBD	-	TBD	TBD
413+40.00	TBD	-	TBD	TBD
413+50.00	TBD	-	TBD	TBD
413+60.00	TBD	-	TBD	TBD
413+70.00	TBD	-	TBD	TBD
413+80.00	TBD	-	TBD	TBD
413+90.00	TBD	-	TBD	TBD
414+00.00	TBD	TBD	TBD	TBD
414+10.00	TBD	TBD	TBD	TBD
414+20.00	TBD	TBD	TBD	TBD
414+30.00	TBD	TBD	TBD	TBD
414+40.00	TBD	TBD	TBD	TBD
414+50.00	TBD	TBD	TBD	TBD
414+60.00	TBD	TBD	TBD	TBD
414+70.00	TBD	TBD	TBD	TBD
414+80.00	TBD	TBD	TBD	TBD
414+90.00	TBD	TBD	TBD	TBD
415+00.00	TBD	TBD	TBD	TBD
415+10.00	TBD	TBD	TBD	TBD
415+20.00	TBD	TBD	TBD	TBD
415+30.00	TBD	TBD	TBD	TBD
415+40.00	TBD	TBD	TBD	TBD
415+50.00	TBD	TBD	TBD	TBD
415+60.00	TBD	TBD	TBD	TBD
415+70.00	TBD	TBD	TBD	TBD
415+80.00	TBD	TBD	TBD	TBD
415+90.00	TBD	TBD	TBD	TBD
416+00.00	TBD	TBD	TBD	TBD
416+10.00	TBD	TBD	TBD	TBD
416+20.00	TBD	TBD	TBD	TBD
416+30.00	TBD	TBD	TBD	TBD
416+40.00	TBD	TBD	TBD	TBD
416+50.00	TBD	TBD	TBD	TBD
416+60.00	TBD	TBD	TBD	TBD
416+70.00	TBD	TBD	TBD	TBD
416+80.00	TBD	TBD	TBD	TBD
416+90.00	TBD	TBD	TBD	TBD
417+00.00	TBD	TBD	TBD	TBD
417+10.00	TBD	TBD	TBD	TBD
417+20.00	TBD	-	TBD	TBD
417+30.00	TBD	-	TBD	TBD
417+40.00	TBD	-	TBD	TBD
417+50.00	TBD	-	TBD	TBD
417+60.00	TBD	-	TBD	TBD
417+70.00	TBD	-	TBD	TBD
417+80.00	TBD	-	TBD	TBD
417+90.00	TBD	-	TBD	TBD
418+00.00	TBD	-	TBD	TBD
418+10.00	TBD	-	TBD	TBD
418+20.00	TBD	-	TBD	TBD
418+30.00	TBD	-	TBD	TBD
418+40.00	TBD	-	TBD	TBD
418+50.00	TBD	-	TBD	TBD
418+60.00	TBD	-	TBD	TBD

NOTES:

1. FOR GENERAL NOTES, SEE SHEETS X THRU X.
2. FOR GENERAL PLAN, SEE SHEET XX.
3. FOR KEY PLAN, SEE SHEET XX.
4. FOR FRAMING PLAN, SEE SHEET XX.
5. DECK ELEVATIONS ON THIS SHEET ARE SHOWN EVERY 10 FEET ALONG ML I-64, AND AT CRITICAL STATIONS.
6. ELEVATIONS ARE SHOWN TO THE TOP OF THE 8½" CONCRETE DECK.
7. DECK POINTS WITHIN EACH ROW OF THE TABLE ARE RADIAL OR PERPENDICULAR TO ML I-64, AS APPLICABLE.

NO.	REVISION	DATE	BY

WEST VIRGINIA DEPARTMENT OF TRANSPORTATION
DIVISION OF HIGHWAYS
ENGINEERING DIVISION

I-64 OVER KANAWHA RIVER
EUGENE A. CARTER MEMORIAL BRIDGE +3

DECK ELEVATIONS MAINLINE (12 OF 12)

DESIGNED	DATE
DJR	12/25
DRAWN	
SCN	12/25
CHECKED	
REVIEWED	

HDR ENGINEERING INC.
CONSULTING ENGINEERS
CHARLESTON, WV
681-341-6100

SHEET OF
BRIDGE NO. 2563.6

SNOLEN $DD-MMM-YYYY HH:MM$ pw://pwhdruseas02.Intranet.hdr:HDR_US_East_02/Documents/WV_DOT/WVDOT-Eugene_Carter_Bridge_3/6.0_CAD_BIM/6.2_WIP/HDR/6.2.2_Sheet_Files/23_Structure/4.112 Deck Elevations ML

PROJECT NUMBERS		DISTRICT	COUNTY	SHEET NO.	TOTAL
STATE	FEDERAL				
S320-64-57.44 00	NHPP-0064 (497)D	1	KANAWHA		

	LOCATION	BL RAMP D STATION	LT FASCIA ELEV	LT GUTTER ELEV	GIRDER DG1 ELEV	GIRDER DG2 ELEV	GIRDER DG3 ELEV	BL RAMP D ELEV	GIRDER DG4 ELEV	RT GUTTER ELEV	RT FASCIA ELEV
	CL BRG ABUT D	1+98.00	660.04	659.94	659.86	659.45	659.05	658.89	658.64	658.56	658.46
SPAN D1	1.10	2+05.37	660.20	660.11	660.02	659.62	659.21	659.05	658.81	658.72	658.63
SPAN D1	1.20	2+12.74	660.37	660.28	660.19	659.79	659.38	659.22	658.98	658.89	658.80
SPAN D1	1.30	2+20.11	660.55	660.45	660.37	659.96	659.56	659.40	659.15	659.07	658.97
SPAN D1	1.40	2+27.48	660.72	660.63	660.54	660.14	659.73	659.57	659.33	659.24	659.15
SPAN D1	1.50	2+34.85	660.90	660.80	660.72	660.31	659.91	659.75	659.50	659.42	659.32
SPAN D1	1.60	2+42.22	661.07	660.98	660.89	660.49	660.08	659.92	659.68	659.59	659.50
SPAN D1	1.70	2+49.59	661.25	661.15	661.07	660.66	660.26	660.10	659.85	659.77	659.67
SPAN D1	1.80	2+56.96	661.42	661.33	661.24	660.84	660.43	660.28	660.03	659.94	659.85
SPAN D1	1.90	2+64.33	661.60	661.50	661.42	661.01	660.61	660.45	660.20	660.12	660.02
SPAN D1	CL BRG D1	2+71.70	661.77	661.68	661.59	661.19	660.78	660.63	660.38	660.29	660.20
	CL PIER D1	2+72.70	661.80	661.70	661.62	661.21	660.81	660.65	660.40	660.32	660.22
SPAN D2	CL BRG D2	2+73.70	661.82	661.72	661.64	661.23	660.83	660.67	660.43	660.34	660.25
SPAN D2	2.10	2+84.60	662.08	661.98	661.90	661.49	661.09	660.93	660.68	660.60	660.50
SPAN D2	2.20	2+95.50	662.34	662.24	662.16	661.75	661.35	661.19	660.94	660.86	660.76
SPAN D2	2.30	3+06.40	662.60	662.50	662.42	662.01	661.61	661.45	661.20	661.12	661.02
SPAN D2	2.40	3+17.30	662.86	662.76	662.68	662.27	661.87	661.71	661.46	661.38	661.28
SPAN D2	2.50	3+28.20	663.12	663.02	662.94	662.53	662.13	661.97	661.72	661.64	661.54
SPAN D2	2.60	3+39.10	663.38	663.28	663.20	662.79	662.39	662.23	661.98	661.90	661.80
SPAN D2	2.70	3+50.00	663.63	663.54	663.45	663.05	662.64	662.49	662.24	662.15	662.06
SPAN D2	2.80	3+60.90	663.89	663.80	663.71	663.31	662.90	662.75	662.50	662.41	662.32
SPAN D2	2.90	3+71.80	664.15	664.06	663.97	663.57	663.16	663.01	662.76	662.67	662.58
	CL PIER D2	3+82.70	664.41	664.32	664.23	663.83	663.42	663.26	663.02	662.93	662.84
SPAN D3	3.10	3+93.60	664.67	664.58	664.49	664.09	663.68	663.52	663.28	663.19	663.10
SPAN D3	3.20	4+04.50	664.93	664.83	664.75	664.34	663.94	663.78	663.53	663.45	663.35
SPAN D3	3.30	4+15.40	665.16	665.07	664.98	664.58	664.17	664.01	663.77	663.68	663.59
SPAN D3	3.40	4+26.30	665.37	665.27	665.19	664.78	664.38	664.22	663.97	663.89	663.79
SPAN D3	3.50	4+37.20	665.54	665.45	665.36	664.96	664.55	664.40	664.15	664.06	663.97
SPAN D3	3.60	4+48.10	665.69	665.60	665.51	665.11	664.70	664.54	664.30	664.21	664.12
SPAN D3	3.70	4+59.00	665.81	665.72	665.63	665.23	664.82	664.67	664.42	664.33	664.24
SPAN D3	3.80	4+69.90	665.91	665.81	665.73	665.32	664.92	664.76	664.51	664.43	664.33
SPAN D3	3.90	4+80.80	665.97	665.87	665.79	665.38	664.98	664.82	664.57	664.49	664.39
SPAN D3	CL BRG D3	4+91.70	666.01	665.91	665.83	665.42	665.02	664.86	664.61	664.53	664.43
	CL PIER D3	4+92.70	666.01	665.91	665.83	665.42	665.02	664.86	664.61	664.53	664.43

BL RAMP D STATION	LT FASCIA ELEV	LT GUTTER ELEV	BL RAMP D ELEV	RT GUTTER ELEV	RT FASCIA ELEV
2+00.00	TBD	TBD	TBD	TBD	TBD
2+10.00	TBD	TBD	TBD	TBD	TBD
2+20.00	TBD	TBD	TBD	TBD	TBD
2+30.00	TBD	TBD	TBD	TBD	TBD
2+40.00	TBD	TBD	TBD	TBD	TBD
2+50.00	TBD	TBD	TBD	TBD	TBD
2+60.00	TBD	TBD	TBD	TBD	TBD
2+70.00	TBD	TBD	TBD	TBD	TBD
2+80.00	TBD	TBD	TBD	TBD	TBD
2+90.00	TBD	TBD	TBD	TBD	TBD
3+00.00	TBD	TBD	TBD	TBD	TBD
3+10.00	TBD	TBD	TBD	TBD	TBD
3+20.00	TBD	TBD	TBD	TBD	TBD
3+30.00	TBD	TBD	TBD	TBD	TBD
3+40.00	TBD	TBD	TBD	TBD	TBD
3+50.00	TBD	TBD	TBD	TBD	TBD
3+60.00	TBD	TBD	TBD	TBD	TBD
3+70.00	TBD	TBD	TBD	TBD	TBD
3+80.00	TBD	TBD	TBD	TBD	TBD
3+90.00	TBD	TBD	TBD	TBD	TBD
4+00.00	TBD	TBD	TBD	TBD	TBD
4+10.00	TBD	TBD	TBD	TBD	TBD
4+20.00	TBD	TBD	TBD	TBD	TBD
4+30.00	TBD	TBD	TBD	TBD	TBD
4+40.00	TBD	TBD	TBD	TBD	TBD
4+50.00	TBD	TBD	TBD	TBD	TBD
4+60.00	TBD	TBD	TBD	TBD	TBD
4+70.00	TBD	TBD	TBD	TBD	TBD
4+80.00	TBD	TBD	TBD	TBD	TBD
4+90.00	TBD	TBD	TBD	TBD	TBD
5+00.00	TBD	TBD	TBD	TBD	TBD
5+10.00	TBD	TBD	TBD	TBD	TBD
5+20.00	TBD	TBD	TBD	TBD	TBD
5+30.00	TBD	TBD	TBD	TBD	TBD
5+40.00	TBD	TBD	TBD	TBD	TBD
5+50.00	TBD	TBD	TBD	TBD	TBD
5+60.00	TBD	TBD	TBD	TBD	TBD
5+70.00	TBD	TBD	TBD	TBD	TBD
5+80.00	TBD	TBD	TBD	TBD	TBD
5+90.00	TBD	TBD	TBD	TBD	TBD
6+00.00	TBD	TBD	TBD	TBD	TBD
6+10.00	TBD	TBD	TBD	TBD	TBD
6+20.00	TBD	TBD	TBD	TBD	TBD
6+30.00	TBD	TBD	TBD	TBD	TBD
6+40.00	TBD	TBD	TBD	TBD	TBD
6+50.00	TBD	TBD	TBD	TBD	TBD
6+60.00	TBD	TBD	TBD	TBD	TBD
6+70.00	TBD	TBD	TBD	TBD	TBD
6+80.00	TBD	TBD	TBD	TBD	TBD
6+90.00	TBD	TBD	TBD	TBD	TBD
7+00.00	TBD	TBD	TBD	TBD	TBD
7+10.00	TBD	TBD	TBD	TBD	TBD
7+20.00	TBD	TBD	TBD	TBD	TBD
7+30.00	TBD	TBD	TBD	TBD	TBD
7+40.00	TBD	TBD	TBD	TBD	TBD
7+50.00	TBD	TBD	TBD	TBD	TBD
7+60.00	TBD	TBD	TBD	TBD	TBD
7+70.00	TBD	TBD	TBD	TBD	TBD

NOTES:

1. FOR GENERAL NOTES, SEE SHEETS X THRU X.
2. FOR GENERAL PLAN, SEE SHEET XX.
3. FOR KEY PLAN, SEE SHEET XX.
4. FOR FRAMING PLAN, SEE SHEET XX.
5. DECK ELEVATIONS ON THIS SHEET ARE SHOWN AT TENTH POINTS ALONG SPAN BETWEEN CL BEARINGS, AND AT SUBSTRUCTURE UNITS, AS WELL AS EVERY 10 FEET ALONG BL RAMP D.
6. ELEVATIONS ARE SHOWN TO THE TOP OF THE 8½" CONCRETE DECK.
7. DECK POINTS WITHIN EACH ROW OF THE TABLE ORGANIZED BY SPAN ARE RADIAL TO BL RAMP D, EXCEPT FOR CL BEARINGS ADJACENT TO EXPANSION PIERS, WHERE POINTS ARE PARALLEL TO NEAREST SUBSTRUCTURE UNIT. STATIONS, WHERE VARYING, ARE REPORTED AT BL RAMP D.
8. DECK POINTS WITHIN EACH ROW OF THE TABLE SHOWING 10 FOOT INCREMENTS ARE RADIAL TO BL RAMP D.

NO.	REVISION	DATE	BY

WEST VIRGINIA DEPARTMENT OF TRANSPORTATION
DIVISION OF HIGHWAYS
ENGINEERING DIVISION

I-64 OVER KANAWHA RIVER
EUGENE A. CARTER MEMORIAL BRIDGE +3

DECK ELEVATIONS
RAMP D

DESIGNED	DJR	DATE	12/25
DRAWN	SCN		12/25
CHECKED			
REVIEWED			

HDR ENGINEERING INC.
CONSULTING ENGINEERS
CHARLESTON, WV
681-341-6100

SHEET OF
BRIDGE NO. 2563.6

pw://pwhdruseas02.intranet.hdr:HDR_US_East_02/Documents/WV_DOT/WVDOT-Eugene_Carter_Bridge_3/6.0_CAD_BIM/6.2_WIP/HDR/6.2.2_Sheet_Files/23_Structure/4.121 Deck Elevations Ramp D
$DD-MMM-YYYY HH:MM$
SNOLEN

PROJECT NUMBERS		DISTRICT	COUNTY	SHEET NO.	TOTAL
STATE	FEDERAL				
S320-64-57.44 00	NHPP-0064 (497)D	1	KANAWHA		

DECK ELEVATIONS AT 10TH POINTS ALONG GIRDER LINE

SPAN	10TH PT	EG1	EG2	EG3	EG4
℄ BRG PIER EB		621.16	621.02	620.89	620.75
E1	0.1 L	620.71	620.57	620.44	620.30
	0.2 L	620.27	620.12	619.96	619.81
	0.3 L	619.83	619.66	619.48	619.31
	0.4 L	619.39	619.20	619.01	618.82
	0.5 L	618.94	618.75	618.56	618.37
	0.6 L	618.49	618.30	618.11	617.92
	0.7 L	618.04	617.85	617.66	617.47
	0.8 L	617.59	617.40	617.21	617.02
	0.9 L	617.14	616.95	616.76	616.57
℄ BRG PIER EC		616.69	616.50	616.31	616.12
E2	0.1 L	616.22	616.03	615.84	615.65
	0.2 L	615.75	615.56	615.37	615.18
	0.3 L	615.27	615.08	614.90	614.71
	0.4 L	614.80	614.61	614.42	614.24
	0.5 L	614.33	614.14	613.95	613.76
	0.6 L	613.86	613.67	613.48	613.29
	0.7 L	613.39	613.20	613.01	612.82
	0.8 L	612.92	612.73	612.54	612.35
	0.9 L	612.44	612.25	612.07	611.88
℄ BRG PIER ED		611.97	611.78	611.59	611.41
E3	0.1 L	611.51	611.32	611.13	610.94
	0.2 L	611.04	610.85	610.66	610.47
	0.3 L	610.58	610.39	610.20	610.01
	0.4 L	610.11	609.92	609.73	609.54
	0.5 L	609.65	609.46	609.27	609.08
	0.6 L	609.18	608.99	608.80	608.61
	0.7 L	608.72	608.53	608.34	608.15
	0.8 L	608.25	608.06	607.87	607.68
	0.9 L	607.79	607.60	607.41	607.22
℄ BRG ABUTMENT E		607.32	607.13	606.94	606.75

BRIDGE DECK ELEVATIONS AT BREAKLINES

LOCATION	STATION	A	℄	C
℄ BRG PIER EB	5+35.29	621.19	621.08	620.73
	5+30.00	620.84	620.73	620.38
	5+20.00	620.21	620.08	619.66
	5+10.00	619.57	619.42	618.94
	5+00.00	618.92	618.77	618.27
	4+90.00	618.27	618.11	617.62
	4+80.00	617.61	617.46	616.96
	4+70.00	616.96	616.80	616.31
	4+60.00	616.30	616.14	615.65
	4+50.00	615.64	615.49	615.00
	4+40.00	614.99	614.83	614.34
	4+30.00	614.33	614.18	613.69
	4+20.00	613.68	613.52	613.03
	4+10.00	613.02	612.87	612.38
	4+00.00	612.37	612.21	611.72
	3+90.00	611.71	611.56	611.07
	3+80.00	611.06	610.90	610.41
	3+70.00	610.40	610.25	609.76
	3+60.00	609.75	609.59	609.10
	3+50.00	609.09	608.94	608.45
	3+40.00	608.44	608.28	607.79
	3+30.00	607.78	607.63	607.14
℄ BRG ABUTMENT E	3+23.54	607.36	607.21	606.71

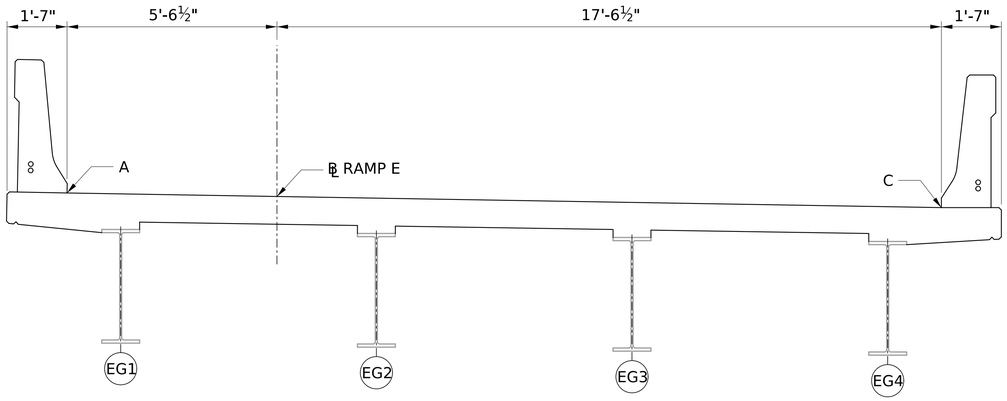

DECK SECTION
(LOOKING BACK STATION)

NOTES:

1. FOR RAMP E DECK SECTION, SEE SHEET XX.

PROCEDURE FOR DETERMINING DEAD LOAD DEFLECTIONS & HAUNCH DEPTHS FOR GIRDERS

1. PRIOR TO REMOVING THE EXISTING DECK, DETERMINE THE TOP OF GIRDER ELEVATION AT THE 10TH POINTS ALONG EACH GIRDER BETWEEN CENTERLINES OF BEARINGS. THE PREFERRED METHOD OF DETERMINING TOP OF GIRDER ELEVATIONS IS BY DRILLING A HOLE IN THE DECK.
2. MEASURE THE DECK THICKNESS IN EACH BAY BETWEEN GIRDERS DURING REMOVAL AND CALCULATE THE AVERAGE DECK THICKNESS.
3. AFTER EXISTING DECK IS REMOVED, SURVEY THE TOP OF THE GIRDER ELEVATIONS AT 10TH POINTS ALONG THE TOP OF THE GIRDER.
4. CALCULATE THE ELEVATION DIFFERENCE IN STEPS 1 AND 3 AT EACH 10TH POINT. CAREFULLY DOCUMENT ALL INFORMATION AND FURNISH A COPY TO THE REPRESENTATIVE.
5. FOR THE NEW DECK, DETERMINE ANTICIPATED DEAD LOAD DEFLECTIONS AT 10TH POINT ALONG EACH GIRDER BY MULTIPLYING THE CALCULATED DIFFERENCES IN THE ELEVATIONS FOUND IN STEP 4 BY THE RATIO OF THE NEW DECK WEIGHT TO THE EXISTING DECK WEIGHT. (SEE PROCEDURE NOTES 1 AND 2).
6. DETERMINE THE HAUNCH DEPTH AT ANY 10TH POINT ALONG THE GIRDER BY SUBTRACTING FROM THE NEW DECK ELEVATION THE FINAL TOP OF GIRDER ELEVATION (SURVEYED TOP OF GIRDER ELEVATION IN STEP 3 MINUS THE ANTICIPATED DEAD LOAD DEFLECTION COMPUTED IN STEP 5) AND THE NEW DECK THICKNESS.

PROCEDURE NOTES:

1. NEW DECK WEIGHT: NEW DECK UNIT WEIGHT X NEW DECK THICKNESS X FACTOR

   - USE A FACTOR OF 1.15 TO ACCOUNT FOR PERMANENT METAL DECK FORMS AND HAUNCH.

   - USE A FACTOR OF 1.05 TO ACCOUNT FOR PERMANENT METAL DECK FORMS AND HAUNCH WHEN METAL DECK FORM VALLEYS ARE BLOCKED.

   - FOR NEW DECK NORMAL WEIGHT CONCRETE - USE 150 POUNDS PER CUBIC FOOT.

   - FOR NEW DECK LIGHT WEIGHT CONCRETE - USE 115 POUNDS PER CUBIC FEET.
2. EXISTING DECK WEIGHT: 150 POUNDS PER CUBIC FOOT X AVERAGE MEASURED EXISTING DECK THICKNESS.
3. IF THE COMPUTED HAUNCH IS A NEGATIVE VALUE, ADJUST THE DECK GRADES SO THAT A MINIMUM DECK THICKNESS OF 8½" CAN BE ACHIEVED OVER THE STRINGERS.
4. REINFORCE DECK HAUNCHES WHEN THE CONCRETE DEPTH EXCEEDS 4 INCHES. SEE HAUNCH REINFORCEMENT DETAIL ON SHEET XX.

NO.	REVISION	DATE	BY

WEST VIRGINIA DEPARTMENT OF TRANSPORTATION
DIVISION OF HIGHWAYS
ENGINEERING DIVISION

I-64 OVER KANAWHA RIVER
EUGENE A. CARTER MEMORIAL BRIDGE +3

DECK ELEVATIONS - RAMP E
10th POINTS AND 10' INCREMENTS

DESIGNED MLH	DATE 12/25	Mead & Hunt	MEAD & HUNT INC. CONSULTING ENGINEERS CHARLESTON, WV 304-345-6712
DRAWN DJC	12/25		
CHECKED			SHEET OF
REVIEWED			BRIDGE NO. 2563.6

X:\324160\251911.01\TECH\Structures\Ramp E\sheets\str_slb_004_Ramp E_Eugene Carter Memorial Bridge.dgn
$DD-MMM-YYYY HH:MM$
1420djc

PROJECT NUMBERS		DISTRICT	COUNTY	SHEET NO.	TOTAL
STATE	FEDERAL				
S320-64-57.44 00	NHPP-0064 (497)D	1	KANAWHA		

DECK ELEVATIONS AT 10TH POINTS ALONG GIRDER LINE

SPAN	10TH PT	FG1	FG2	FG3	FG4
℄ BRG PIER FB		624.28	624.10	623.91	623.72
F1	0.1 L	623.86	623.69	623.52	623.35
	0.2 L	623.43	623.28	623.12	622.97
	0.3 L	623.00	622.87	622.73	622.60
	0.4 L	622.62	622.48	622.35	622.21
	0.5 L	622.23	622.10	621.96	621.83
	0.6 L	621.85	621.71	621.58	621.44
	0.7 L	621.46	621.32	621.19	621.05
	0.8 L	621.07	620.94	620.80	620.67
	0.9 L	620.69	620.55	620.42	620.28
℄ BRG PIER FC		620.30	620.17	620.03	619.90
F2	0.1 L	619.84	619.70	619.57	619.43
	0.2 L	619.37	619.23	619.10	618.96
	0.3 L	618.90	618.77	618.63	618.50
	0.4 L	618.43	618.30	618.16	618.03
	0.5 L	617.97	617.83	617.70	617.56
	0.6 L	617.50	617.36	617.23	617.09
	0.7 L	617.03	616.90	616.76	616.63
	0.8 L	616.56	616.43	616.29	616.16
	0.9 L	616.10	615.96	615.83	615.69
℄ BRG PIER FD		615.63	615.49	615.36	615.22
F3	0.1 L	615.24	615.11	614.97	614.84
	0.2 L	614.86	614.72	614.59	614.45
	0.3 L	614.47	614.34	614.20	614.07
	0.4 L	614.09	613.95	613.82	613.68
	0.5 L	613.70	613.57	613.43	613.30
	0.6 L	613.31	613.18	613.04	612.91
	0.7 L	612.93	612.79	612.66	612.52
	0.8 L	612.54	612.41	612.27	612.14
	0.9 L	612.16	612.02	611.89	611.75
℄ BRG ABUTMENT F		611.77	611.64	611.50	611.37

BRIDGE DECK ELEVATIONS AT BREAKLINES

LOCATION	STATION	A	℄	C
℄ BRG PIER FB	4+65.40	624.32	623.84	623.68
	4+70.00	624.02	623.57	623.42
	4+80.00	623.37	622.98	622.86
	4+90.00	622.75	622.40	622.29
	5+00.00	622.17	621.82	621.70
	5+10.00	621.58	621.23	621.12
	5+20.00	621.00	620.65	620.54
	5+30.00	620.41	620.06	619.95
	5+40.00	619.83	619.48	619.37
	5+50.00	619.24	618.89	618.78
	5+60.00	618.66	618.31	618.20
	5+70.00	618.08	617.73	617.61
	5+80.00	617.49	617.14	617.03
	5+90.00	616.91	616.56	616.45
	6+00.00	616.32	615.97	615.86
	6+10.00	615.74	615.39	615.28
	6+20.00	615.15	614.80	614.69
	6+30.00	614.57	614.22	614.11
	6+40.00	613.99	613.63	613.52
	6+50.00	613.40	613.05	612.94
	6+60.00	612.82	612.47	612.36
	6+70.00	612.23	611.88	611.77
℄ BRG ABUT F	6+77.40	611.80	611.45	611.34

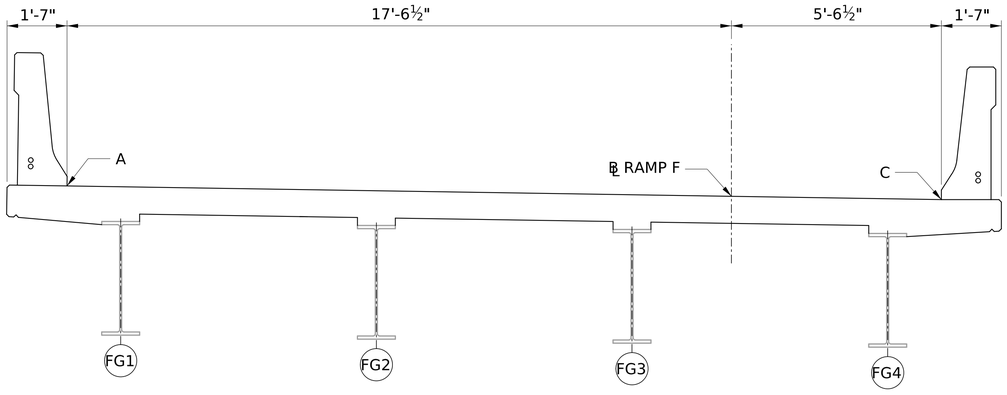

DECK SECTION

(LOOKING AHEAD STATION)

PROCEDURE FOR DETERMINING DEAD LOAD DEFLECTIONS & HAUNCH DEPTHS FOR GIRDERS

1. PRIOR TO REMOVING THE EXISTING DECK, DETERMINE THE TOP OF GIRDER ELEVATION AT THE 10TH POINTS ALONG EACH GIRDER BETWEEN CENTERLINES OF BEARINGS. THE PREFERRED METHOD OF DEEMING TOP OF GIRDER ELEVATIONS IS BY DRILLING A HOLE IN THE DECK.
2. MEASURE THE DECK THICKNESS IN EACH BAY BETWEEN GIRDERS DURING REMOVAL AND CALCULATE THE AVERAGE DECK THICKNESS.
3. AFTER EXISTING DECK IS REMOVED, SURVEY THE TOP OF THE GIRDER ELEVATIONS AT 10TH POINTS ALONG THE TOP OF THE GIRDER.
4. CALCULATE THE ELEVATION DIFFERENCE IN STEPS 1 AND 3 AT EACH 10TH POINT. CAREFULLY DOCUMENT ALL INFORMATION AND FURNISH A COPY TO THE REPRESENTATIVE.
5. FOR THE NEW DECK, DETERMINE ANTICIPATED DEAD LOAD DEFLECTIONS AT 10TH POINT ALONG EACH GIRDER BY MULTIPLYING THE CALCULATED DIFFERENCES IN THE ELEVATIONS FOUND IN STEP 4 BY THE RATIO OF THE NEW DECK WEIGHT TO THE EXISTING DECK WEIGHT. (SEE PROCEDURE NOTES 1 AND 2).
6. DETERMINE THE HAUNCH DEPTH AT ANY 10TH POINT ALONG THE GIRDER BY SUBTRACTING FROM THE NEW DECK ELEVATION THE FINAL TOP OF GIRDER ELEVATION (SURVEYED TOP OF GIRDER ELEVATION IN STEP 3 MINUS THE ANTICIPATED DEAD LOAD DEFLECTION COMPUTED IN STEP 5) AND THE NEW DECK THICKNESS.

PROCEDURE NOTES:

1. NEW DECK WEIGHT: NEW DECK UNIT WEIGHT X NEW DECK THICKNESS X FACTOR

   - USE A FACTOR OF 1.15 TO ACCOUNT FOR PERMANENT METAL DECK FORMS AND HAUNCH.

   - USE A FACTOR OF 1.05 TO ACCOUNT FOR PERMANENT METAL DECK FORMS AND HAUNCH WHEN METAL DECK FORM VALLEYS ARE BLOCKED.

   - FOR NEW DECK NORMAL WEIGHT CONCRETE - USE 150 POUNDS PER CUBIC FOOT.

   - FOR NEW DECK LIGHT WEIGHT CONCRETE - USE 115 POUNDS PER CUBIC FEET.
2. EXISTING DECK WEIGHT: 150 POUNDS PER CUBIC FOOT X AVERAGE MEASURED EXISTING DECK THICKNESS.
3. IF THE COMPUTED HAUNCH IS A NEGATIVE VALUE, ADJUST THE DECK GRADES SO THAT A MINIMUM DECK THICKNESS OF 8½" CAN BE ACHIEVED OVER THE STRINGERS.
4. REINFORCE DECK HAUNCHES WHEN THE CONCRETE DEPTH EXCEEDS 4 INCHES. SEE HAUNCH REINFORCEMENT DETAIL ON SHEET XX.

NOTES:

1. FOR RAMP F DECK SECTION, SEE SHEET XX.

NO.	REVISION	DATE	BY

WEST VIRGINIA DEPARTMENT OF TRANSPORTATION
DIVISION OF HIGHWAYS
ENGINEERING DIVISION

I-64 OVER KANAWHA RIVER
EUGENE A. CARTER MEMORIAL BRIDGE +3
DECK ELEVATIONS- RAMP F
10th POINTS AND 10' INCREMENTS

DESIGNED	DATE
MLH	12/25
DRAWN	
DJC	12/25
CHECKED	
REVIEWED	

Mead & Hunt

MEAD & HUNT INC.
CONSULTING ENGINEERS
CHARLESTON, WV
304-345-6712

SHEET OF
BRIDGE NO. 2563.6

1420djc $DD-MMM-YYYY HH:MM$ X:\32416\00\251911.01\TECH\Structures\Ramp F\sheets\str_slb_004_Ramp F_Eugene Carter Memorial Bridge.dgn

PROJECT NUMBERS		DISTRICT	COUNTY	SHEET NO.	TOTAL
STATE	FEDERAL				
S320-64-57.44 00	NHPP-0064 (497)D	1	KANAWHA		

THE PROCEDURE BELOW (UTILIZED ON NUMEROUS PREVIOUS PROJECTS) WILL BE FOLLOWED. MODIFICATIONS WILL BE MADE TO REFLECT EUGENE CARTER BRIDGE SPECIFICS.

PROCEDURE FOR DETERMINING DEAD LOAD DEFLECTIONS & HAUNCH DEPTHS FOR GIRDERS:

1. PRIOR TO REMOVING THE EXISTING DECK, DETERMINE THE TOP OF GIRDER ELEVATION AT THE 10TH POINTS ALONG EACH GIRDER BETWEEN CENTERLINES OF BEARINGS. THE PREFERRED METHOD OF DETERMINING TOP OF GIRDER ELEVATIONS IS BY DRILLING A HOLE IN THE DECK. TAKE CARE NOT TO DAMAGE EXISTING GIRDER FLANGES. DAMAGE SHALL BE REPAIRED TO THE SATISFACTION OF THE ENGINEER AT NO COST TO THE DIVISION.

2. MEASURE THE DECK THICKNESS IN EACH BAY BETWEEN GIRDERS DURING REMOVAL AND CALCULATE THE AVERAGE DECK THICKNESS.

3. AFTER EXISTING DECK IS REMOVED, SURVEY THE TOP OF GIRDER ELEVATIONS AT 10TH POINTS ALONG THE TOP OF GIRDER.

4. CALCULATE THE ELEVATION DIFFERENCE IN STEPS 1 AND 3 AT EACH 10TH POINT. CAREFULLY DOCUMENT ALL INFORMATION AND FURNISH A COPY TO THE REPRESENTATIVE.

5. FOR THE NEW DECK, DETERMINE ANTICIPATED DEAD LOAD DEFLECTIONS AT 10TH POINTS ALONG EACH GIRDER BY MULTIPLYING THE CALCULATED DIFFERENCE IN THE ELEVATIONS FOUND IN STEP 4 BY THE RATIO OF THE NEW DECK WEIGHT TO THE EXISTING DECK WEIGHT. (SEE PROCEDURE NOTES 1 AND 2). CALCULATED DECK WEIGHTS ARE FOR THE ENTIRE CROSS-SECTION, AND RATIO APPLIES EQUALLY TO ALL GIRDERS.

6. DETERMINE THE HAUNCH DEPTH AT ANY 10TH POINT ALONG THE GIRDER BY SUBTRACTING FROM THE NEW DECK ELEVATION THE FINAL TOP OF GIRDER ELEVATION (SURVEYED TOP OF GIRDER ELEVATION IN STEP 3 MINUS THE ANTICIPATED DEAD LOAD DEFLECTION COMPUTED IN STEP 5) AND THE NEW DECK THICKNESS.

PROCEDURE NOTES:

1. NEW DECK WEIGHT: NEW DECK WIDTH X (NEW DECK UNIT WEIGHT X NEW DECK THICKNESS + NEW MISC WEIGHT) + 2 X NEW PARAPET WEIGHT

   - NEW DECK WIDTH IS 54'-6".

   - FOR NEW DECK UNIT WEIGHT, USE 115 PCF.

   - FOR NEW MISC WEIGHT, USE 15 PSF TO ACCOUNT FOR SIP FORMS AND NEW HAUNCHES. THIS AVERAGE VALUE IS TO BE APPLIED TO THE ENTIRE DECK WIDTH.

   - FOR NEW PARAPET WEIGHT, USE 365 PLF TO ACCOUNT FOR NEW BARRIER, ADDITIONAL WEIGHT AT OVERHANG, AND PEDESTRIAN RAILING.

2. EXISTING DECK WEIGHT: EXISTING DECK WIDTH X (EXISTING DECK UNIT WEIGHT X AVERAGE MEASURED EXISTING DECK THICKNESS + EXISTING MISC WEIGHT) + 2 X EXISTING PARAPET WEIGHT

   - EXISTING DECK WIDTH IS 52'-0"

   - FOR EXISTING DECK UNIT WEIGHT, USE 150 PCF

   - FOR EXISTING MISC WEIGHT, USE 6 PSF TO ACCOUNT FOR EXISTING HAUNCHES. THIS AVERAGE VALUE IS TO BE APPLIED TO THE ENTIRE DECK WIDTH

   - FOR EXISTING PARAPET WEIGHT, USE 670 PLF TO ACCOUNT FOR EXISTING BARRIER AND ADDITIONAL WEIGHT AT OVERHANG

3. IF THE COMPUTED HAUNCH IS A NEGATIVE VALUE, ADJUST THE DECK GRADES SO THAT A MINIMUM DECK THICKNESS OF 8" CAN BE ACHIEVED OVER THE GIRDERS.

4. REINFORCE DECK HAUNCHES WHEN THE TOTAL CONCRETE DEPTH OVER A GIRDER EXCEEDS 12 INCHES (4" CONCRETE HAUNCH DEPTH). SEE HAUNCH REINFORCEMENT DETAIL ON SHEET 46 .

NO.	REVISION	DATE	BY

WEST VIRGINIA DEPARTMENT OF TRANSPORTATION
DIVISION OF HIGHWAYS
ENGINEERING DIVISION

I-64 OVER KANAWHA RIVER
EUGENE A. CARTER MEMORIAL BRIDGE +3

DECK DEFLECTIONS - PROCEDURE

DESIGNED	DATE
DRAWN	
CHECKED	
REVIEWED	

HDR ENGINEERING INC.
CONSULTING ENGINEERS
CHARLESTON, WV
681-341-6100

SHEET OF

BRIDGE NO. 2563.6

SNOLEN $DD-MMM-YYYY HH:MM$ pw://pwhdruseas02.intranet.hdr:HDR_US_East_02/Documents/WV_DOT/WVDOT-Eugene_Carter_Bridge_3/6.0_CAD_BIM/6.2_WIP/HDR/6.2.2_Sheet_Files/23_Structure/Reference/str_ref_bdr_Eugene Carter Memorial.dgn

PROJECT NUMBERS		DISTRICT	COUNTY	SHEET NO.	TOTAL
STATE	FEDERAL				
S320-64-57.44 00	NHPP-0064 (497)D	1	KANAWHA		

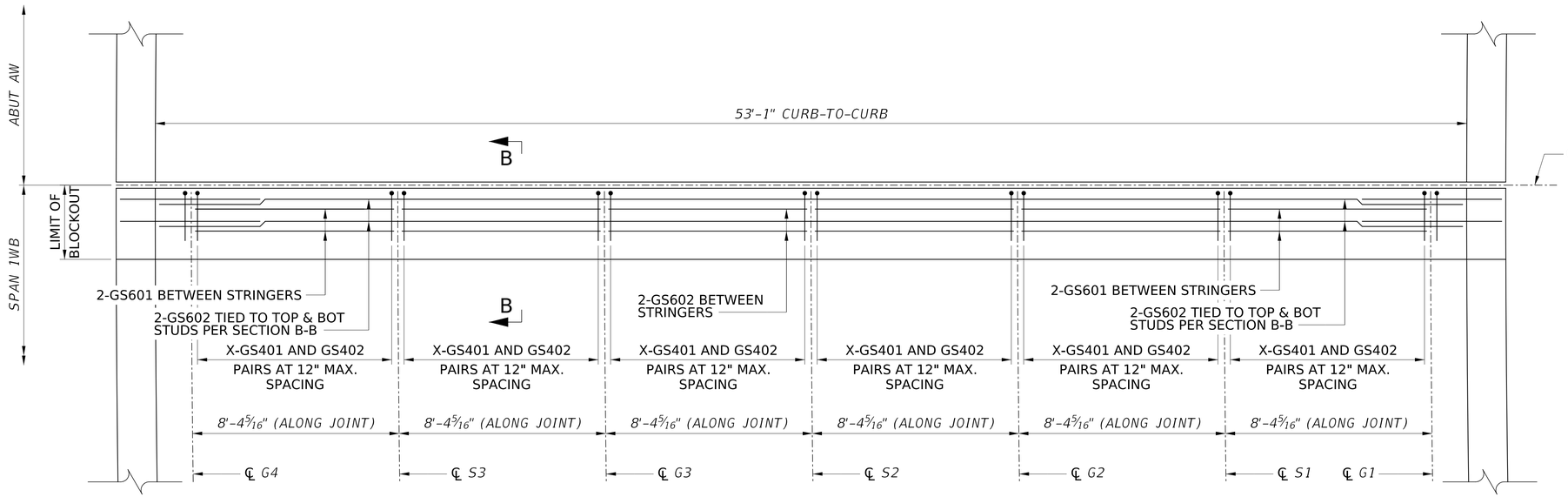

ABUT AW STRIP SEAL JOINT PLAN

TYPICAL DECK REINFORCEMENT NOT SHOWN FOR CLARITY, REFER TO DECK PAVING PLANS

NOTE:

REMOVE ALL COMPONENTS OF EXISTING SLIDING PLATE EXPANSION DAM AS NECESSARY FOR INSTALLATION OF NEW STRIP SEAL.

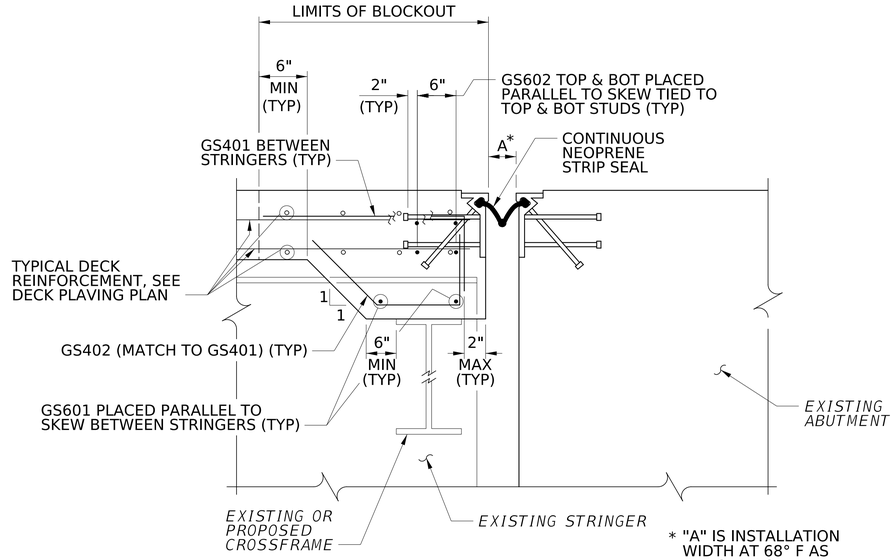

SECTION B-B

NTS

* "A" IS INSTALLATION WIDTH AT 68° F AS PER STRIP SEAL JOINT INFORMATION TABLE

ABUT AW JOINT DETAIL QUANTITIES

ITEM NO.	DESCRIPTION	UNIT	QUANTITY
602002-001	GALVANIZED COATED REINFORCING STEEL BAR	LB	1564
627011-002	REMOVE AND REPLACE EXPANSION DEVICE, STRIP SEAL	LF	53†

† LENGTH IS APPROXIMATE TO NEAREST FOOT. SEE STRIP SEAL JOINT INFORMATION TABLE.

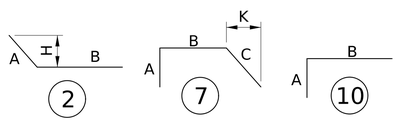

REINFORCEMENT BAR SCHEDULE

MARK	SIZE	LENGTH	NO.	TYPE	A	B	C	H	K	REMARKS
STRIP SEAL JOINT REINFORCEMENT SPAN 1WB										
GS401	4	3'-4	52	10	-	-				
GS402	4	3'-9	52	7	-	-	-		-	
GS601	6	11'-5	8	STR						
GS602	6	27'-3	8	STR						
GS603	6	6'-0	8	2	-	-		-		

NOTES:

1. FOR GENERAL NOTES, SEE SHEETS X AND X.
2. FOR STRIP SEAL JOINT DETAILS, SEE SHEET X.
3. "G" IN BAR MARK INDICATES GALVANIZED COATED.
4. DO NOT USE RAIL STEEL (A616) IN BRIDGE ABUTMENTS, FOOTINGS, AND WHERE BENDING OF REINFORCEMENT BARS IS INDICATED.
5. REINFORCING BAR SCHEDULE IS FOR INFORMATION ONLY. VERIFY SCHEDULE PRIOR TO BIDDING AND FABRICATION.
6. NO CORRECTION IN LENGTH FOR BEND CURVATURE IS TO BE MADE.
7. ALL DIMENSIONS ARE OUT TO OUT OF BAR.

NO.	REVISION	DATE	BY

WEST VIRGINIA DEPARTMENT OF TRANSPORTATION
DIVISION OF HIGHWAYS
ENGINEERING DIVISION

I-64 OVER KANAWHA RIVER
EUGENE A. CARTER MEMORIAL BRIDGE +3

ABUT AW
STRIP SEAL DETAILS

DESIGNED	DATE
DLS	12/12
DRAWN	
SSS	12/12
CHECKED	
REVIEWED	

HDR ENGINEERING INC.
CONSULTING ENGINEERS
CHARLESTON, WV
681-341-6100

SHEET OF

BRIDGE NO. 2563.6

pw://pwhdruseas02.intranet.hdr:HDR_US_East_02/Documents/WV_DOT/WVDOT-Eugene_Carter_Bridge_3/6.0_CAD_BIM/6.2_WIP/HDR/6.2.2_Sheet_Files/23_Structure/4.200 strip seal aw
$DD-MMM-YYYY HH:MM$
SNOLEN

PROJECT NUMBERS		DISTRICT	COUNTY	SHEET NO.	TOTAL
STATE	FEDERAL				
S320-64-57.44 00	NHPP-0064 (497)D	1	KANAWHA		

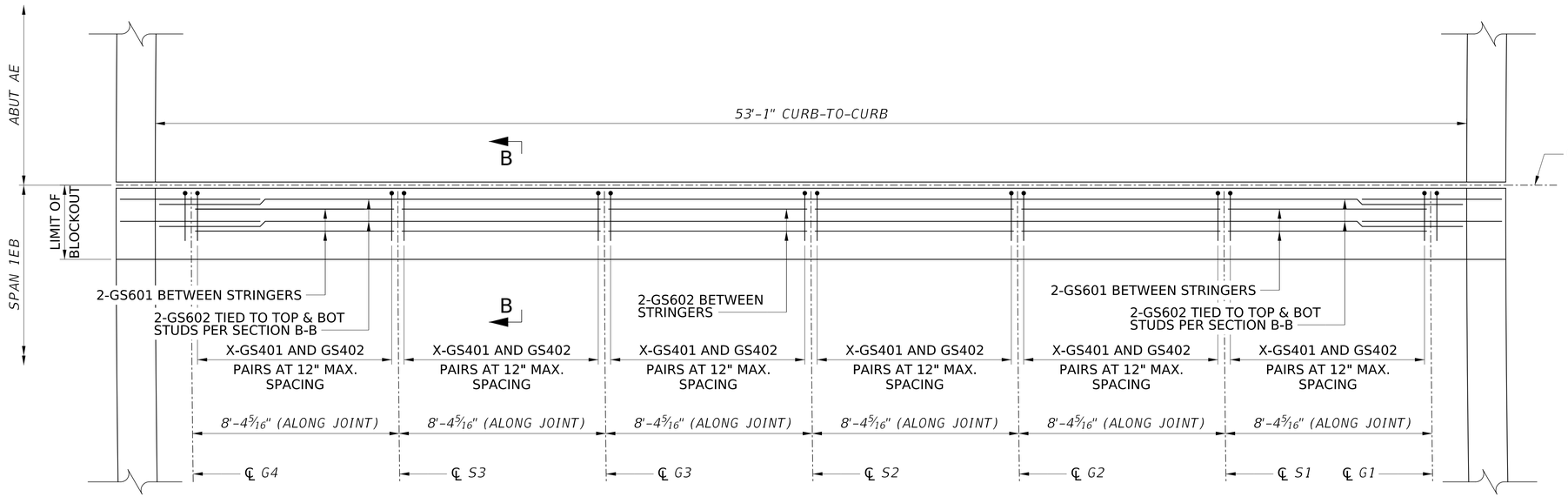

NOTE:

REMOVE ALL COMPONENTS OF EXISTING SLIDING PLATE EXPANSION DAM AS NECESSARY FOR INSTALLATION OF NEW STRIP SEAL.

ABUT AE STRIP SEAL JOINT PLAN

TYPICAL DECK REINFORCEMENT NOT SHOWN FOR CLARITY, REFER TO DECK PAVING PLANS

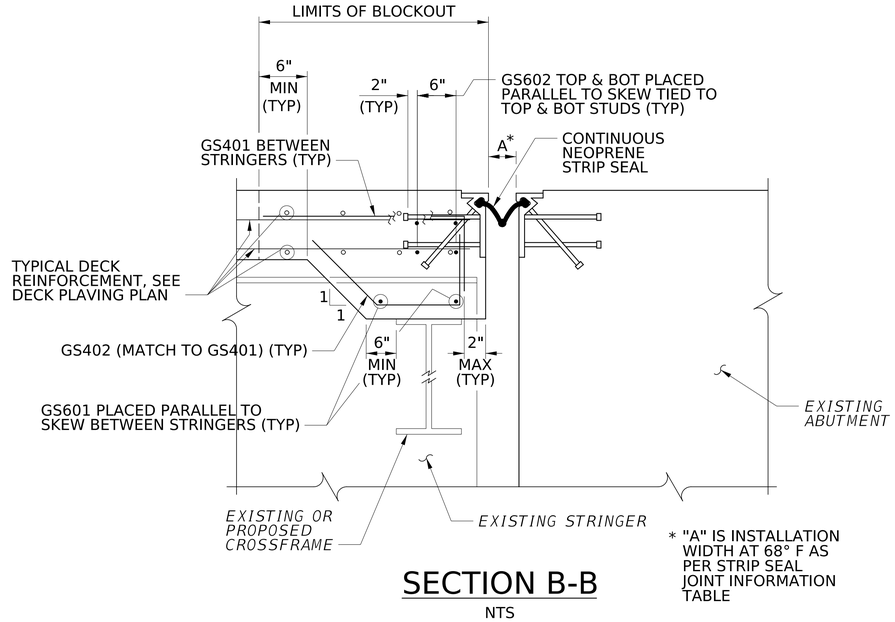

SECTION B-B

NTS

* "A" IS INSTALLATION WIDTH AT 68° F AS PER STRIP SEAL JOINT INFORMATION TABLE

ABUT AE JOINT DETAIL QUANTITIES

ITEM NO.	DESCRIPTION	UNIT	QUANTITY
602002-001	GALVANIZED COATED REINFORCING STEEL BAR	LB	1564
627011-002	REMOVE AND REPLACE EXPANSION DEVICE, STRIP SEAL	LF	53†

† LENGTH IS APPROXIMATE TO NEAREST FOOT. SEE STRIP SEAL JOINT INFORMATION TABLE.

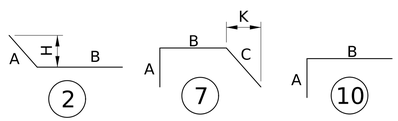

REINFORCEMENT BAR SCHEDULE

MARK	SIZE	LENGTH	NO.	TYPE	A	B	C	H	K	REMARKS
STRIP SEAL JOINT REINFORCEMENT SPAN 1EB										
GS401	4	3'-4	52	10	-	-				
GS402	4	3'-9	52	7	-	-	-		-	
GS601	6	11'-5	8	STR						
GS602	6	27'-3	8	STR						
GS603	6	6'-0	8	2	-	-		-		

NOTES:

1. FOR GENERAL NOTES, SEE SHEETS X AND X.
2. FOR STRIP SEAL JOINT DETAILS, SEE SHEET X.
3. "G" IN BAR MARK INDICATES GALVANIZED COATED.
4. DO NOT USE RAIL STEEL (A616) IN BRIDGE ABUTMENTS, FOOTINGS, AND WHERE BENDING OF REINFORCEMENT BARS IS INDICATED.
5. REINFORCING BAR SCHEDULE IS FOR INFORMATION ONLY. VERIFY SCHEDULE PRIOR TO BIDDING AND FABRICATION.
6. NO CORRECTION IN LENGTH FOR BEND CURVATURE IS TO BE MADE.
7. ALL DIMENSIONS ARE OUT TO OUT OF BAR.

NO.	REVISION	DATE	BY

WEST VIRGINIA DEPARTMENT OF TRANSPORTATION
DIVISION OF HIGHWAYS
ENGINEERING DIVISION

I-64 OVER KANAWHA RIVER
EUGENE A. CARTER MEMORIAL BRIDGE +3
ABUT AE
STRIP SEAL DETAILS

DESIGNED	DATE
DLS	12/12
DRAWN	
SSS	12/12
CHECKED	
REVIEWED	

HDR ENGINEERING INC.
CONSULTING ENGINEERS
CHARLESTON, WV
681-341-6100

SHEET OF

BRIDGE NO. 2563.6

pw://pwhdruseas02.intranet.hdr:HDR_US_East_02/Documents/WV_DOT/WVDOT-Eugene_Carter_Bridge_3/6.0_CAD_BIM/6.2_WIP/HDR/6.2.2_Sheet_Files/23_Structure/4.201 strip seal ae
$DD-MMM-YYYY HH:MM$
SNOLEN

PROJECT NUMBERS		DISTRICT	COUNTY	SHEET NO.	TOTAL
STATE	FEDERAL				
S320-64-57.44 00	NHPP-0064 (497)D	1	KANAWHA		

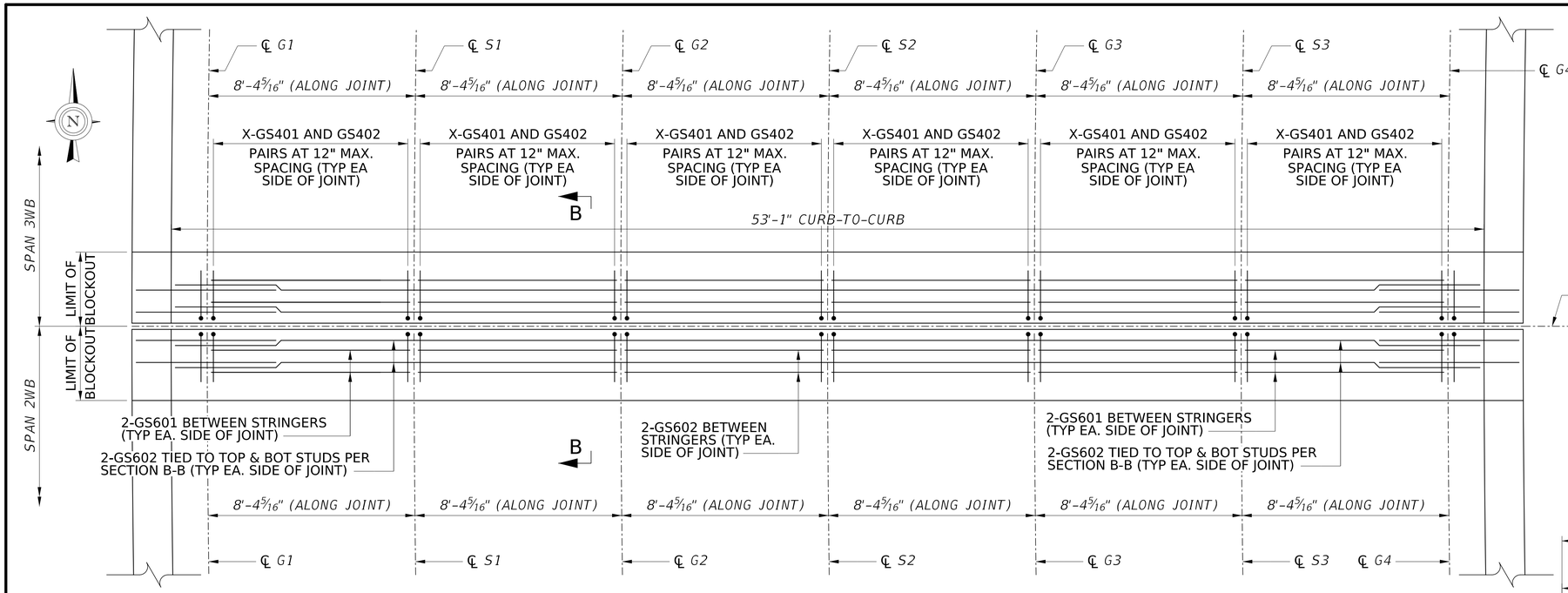

PIER A3 STRIP SEAL JOINT PLAN

TYPICAL DECK REINFORCEMENT NOT SHOWN FOR CLARITY, REFER TO DECK PAVING PLANS

NOTE:

REMOVE ALL COMPONENTS OF EXISTING SLIDING PLATE EXPANSION DAM AS NECESSARY FOR INSTALLATION OF NEW STRIP SEAL.

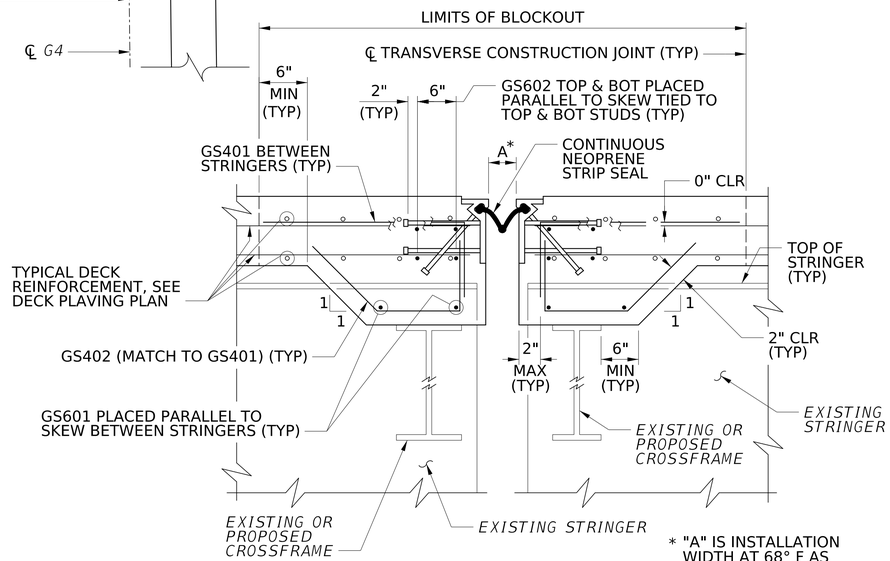

* "A" IS INSTALLATION WIDTH AT 68° F AS PER STRIP SEAL JOINT INFORMATION TABLE

SECTION B-B

NTS

PIER A3 JOINT DETAIL QUANTITIES

ITEM NO.	DESCRIPTION	UNIT	QUANTITY
602002-001	GALVANIZED COATED REINFORCING STEEL BAR	LB	XX
627011-002	REMOVE AND REPLACE EXPANSION DEVICE, STRIP SEAL	LF	XX†

† LENGTH IS APPROXIMATE TO NEAREST FOOT. SEE STRIP SEAL JOINT INFORMATION TABLE.

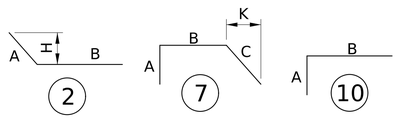

REINFORCEMENT BAR SCHEDULE

MARK	SIZE	LENGTH	NO.	TYPE	A	B	C	H	K	REMARKS
STRIP SEAL JOINT REINFORCEMENT SPAN 2WB										
GS401	4	3'-4	52	10	-	-				
GS402	4	3'-9	52	7	-	-	-		-	
GS601	6	11'-5	8	STR						
GS602	6	27'-3	8	STR						
GS603	6	6'-0	8	2	-	-		-		
STRIP SEAL JOINT REINFORCEMENT SPAN 3WB										
GS401	4	3'-4	52	10	-	-				
GS402	4	3'-9	52	7	-	-	-		-	
GS601	6	11'-5	8	STR						
GS602	6	27'-3	8	STR						
GS603	6	6'-0	8	2	-	-		-		

NOTES:

1. FOR GENERAL NOTES, SEE SHEETS X AND X.
2. FOR STRIP SEAL JOINT DETAILS, SEE SHEET X.
3. "G" IN BAR MARK INDICATES GALVANIZED COATED.
4. DO NOT USE RAIL STEEL (A616) IN BRIDGE ABUTMENTS, FOOTINGS, AND WHERE BENDING OF REINFORCEMENT BARS IS INDICATED.
5. REINFORCING BAR SCHEDULE IS FOR INFORMATION ONLY. VERIFY SCHEDULE PRIOR TO BIDDING AND FABRICATION.
6. NO CORRECTION IN LENGTH FOR BEND CURVATURE IS TO BE MADE.
7. ALL DIMENSIONS ARE OUT TO OUT OF BAR.

NO.	REVISION	DATE	BY

WEST VIRGINIA DEPARTMENT OF TRANSPORTATION
DIVISION OF HIGHWAYS
ENGINEERING DIVISION

I-64 OVER KANAWHA RIVER
EUGENE A. CARTER MEMORIAL BRIDGE +3

PIER A3
STRIP SEAL DETAILS

DESIGNED	DATE
DLS	12/12
DRAWN	
SSS	12/12
CHECKED	
REVIEWED	

HDR ENGINEERING INC.
CONSULTING ENGINEERS
CHARLESTON, WV
681-341-6100

SHEET OF

BRIDGE NO. 2563.6

pw://pwhdrusea02.intranet.hdr:HDR_US_East_02/Documents/WV_DOT/WVDOT-Eugene_Carter_Bridge_3/6.0_CAD_BIM/6.2_WIP/HDR/6.2.2_Sheet_Files/23_Structure/4.202 strip seal a3
$DD-MMM-YYYY HH:MM$
SNOLEN

PROJECT NUMBERS		DISTRICT	COUNTY	SHEET NO.	TOTAL
STATE	FEDERAL				
S320-64-57.44 00	NHPP-0064 (497)D	1	KANAWHA		

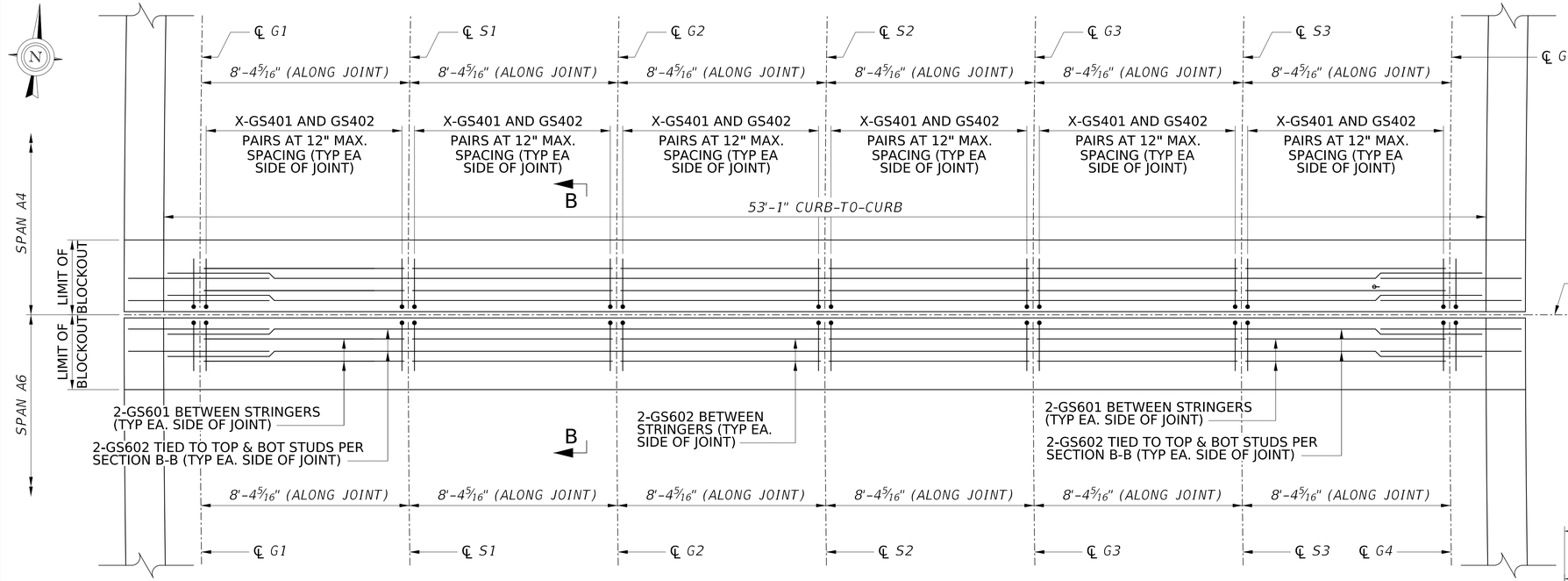

PIER A4 STRIP SEAL JOINT PLAN

TYPICAL DECK REINFORCEMENT NOT SHOWN FOR CLARITY, REFER TO DECK PAVING PLANS

NOTE:

REMOVE ALL COMPONENTS OF EXISTING SLIDING PLATE EXPANSION DAM AS NECESSARY FOR INSTALLATION OF NEW STRIP SEAL.

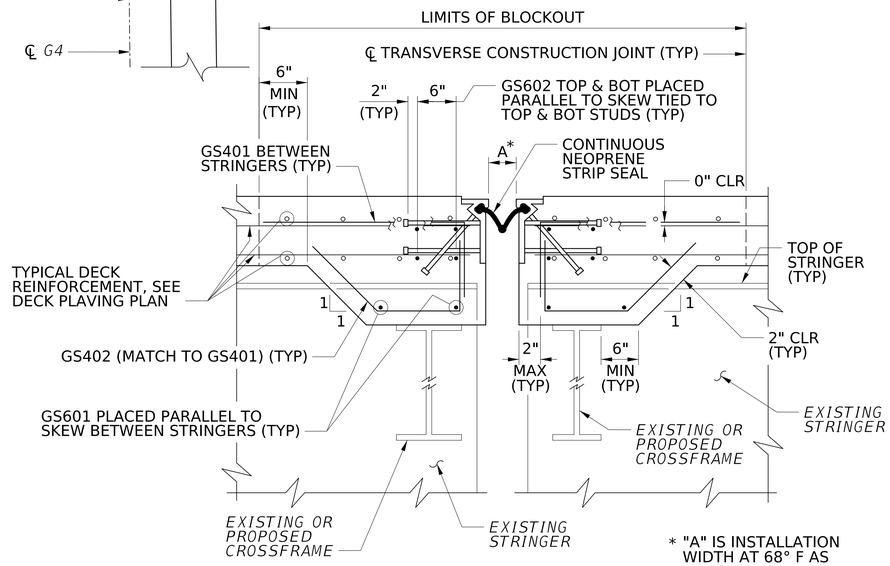

SECTION B-B

NTS

* "A" IS INSTALLATION WIDTH AT 68° F AS PER STRIP SEAL JOINT INFORMATION TABLE

PIER A4 JOINT DETAIL QUANTITIES

ITEM NO.	DESCRIPTION	UNIT	QUANTITY
602002-001	GALVANIZED COATED REINFORCING STEEL BAR	LB	XX
627011-002	REMOVE AND REPLACE EXPANSION DEVICE, STRIP SEAL	LF	XX†

† LENGTH IS APPROXIMATE TO NEAREST FOOT. SEE STRIP SEAL JOINT INFORMATION TABLE.

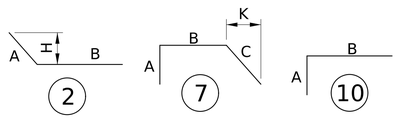

REINFORCEMENT BAR SCHEDULE

MARK	SIZE	LENGTH	NO.	TYPE	A	B	C	H	K	REMARKS
STRIP SEAL JOINT REINFORCEMENT SPAN 2EB										
GS401	4	3'-4	52	10	-	-				
GS402	4	3'-9	52	7	-	-	-		-	
GS601	6	11'-5	8	STR						
GS602	6	27'-3	8	STR						
GS603	6	6'-0	8	2	-	-		-		
STRIP SEAL JOINT REINFORCEMENT SPAN 3EB										
GS401	4	3'-4	52	10	-	-				
GS402	4	3'-9	52	7	-	-	-		-	
GS601	6	11'-5	8	STR						
GS602	6	27'-3	8	STR						
GS603	6	6'-0	8	2	-	-		-		

NOTES:

1. FOR GENERAL NOTES, SEE SHEETS X AND X.
2. FOR STRIP SEAL JOINT DETAILS, SEE SHEET X.
3. "G" IN BAR MARK INDICATES GALVANIZED COATED.
4. DO NOT USE RAIL STEEL (A616) IN BRIDGE ABUTMENTS, FOOTINGS, AND WHERE BENDING OF REINFORCEMENT BARS IS INDICATED.
5. REINFORCING BAR SCHEDULE IS FOR INFORMATION ONLY. VERIFY SCHEDULE PRIOR TO BIDDING AND FABRICATION.
6. NO CORRECTION IN LENGTH FOR BEND CURVATURE IS TO BE MADE.
7. ALL DIMENSIONS ARE OUT TO OUT OF BAR.

NO.	REVISION	DATE	BY

WEST VIRGINIA DEPARTMENT OF TRANSPORTATION
DIVISION OF HIGHWAYS
ENGINEERING DIVISION

I-64 OVER KANAWHA RIVER
EUGENE A. CARTER MEMORIAL BRIDGE +3

PIER A4
STRIP SEAL DETAILS

DESIGNED	DATE
DLS	12/12
DRAWN	
SSS	12/12
CHECKED	
REVIEWED	

HDR ENGINEERING INC.
CONSULTING ENGINEERS
CHARLESTON, WV
681-341-6100

SHEET OF

BRIDGE NO. 2563.6

pw://pwhdruseas02.intranet.hdr:HDR_US_East_02/Documents/WV_DOT/WVDOT-Eugene_Carter_Bridge_3/6.0_CAD_BIM/6.2_WIP/HDR/6.2.2_Sheet_Files/23_Structure/4.203 strip seal a4
$DD-MMM-YYYY HH:MM$
SNOLEN

PROJECT NUMBERS		DISTRICT	COUNTY	SHEET NO.	TOTAL
STATE	FEDERAL				
S320-64-57.44 00	NHPP-0064 (497)D	1	KANAWHA		

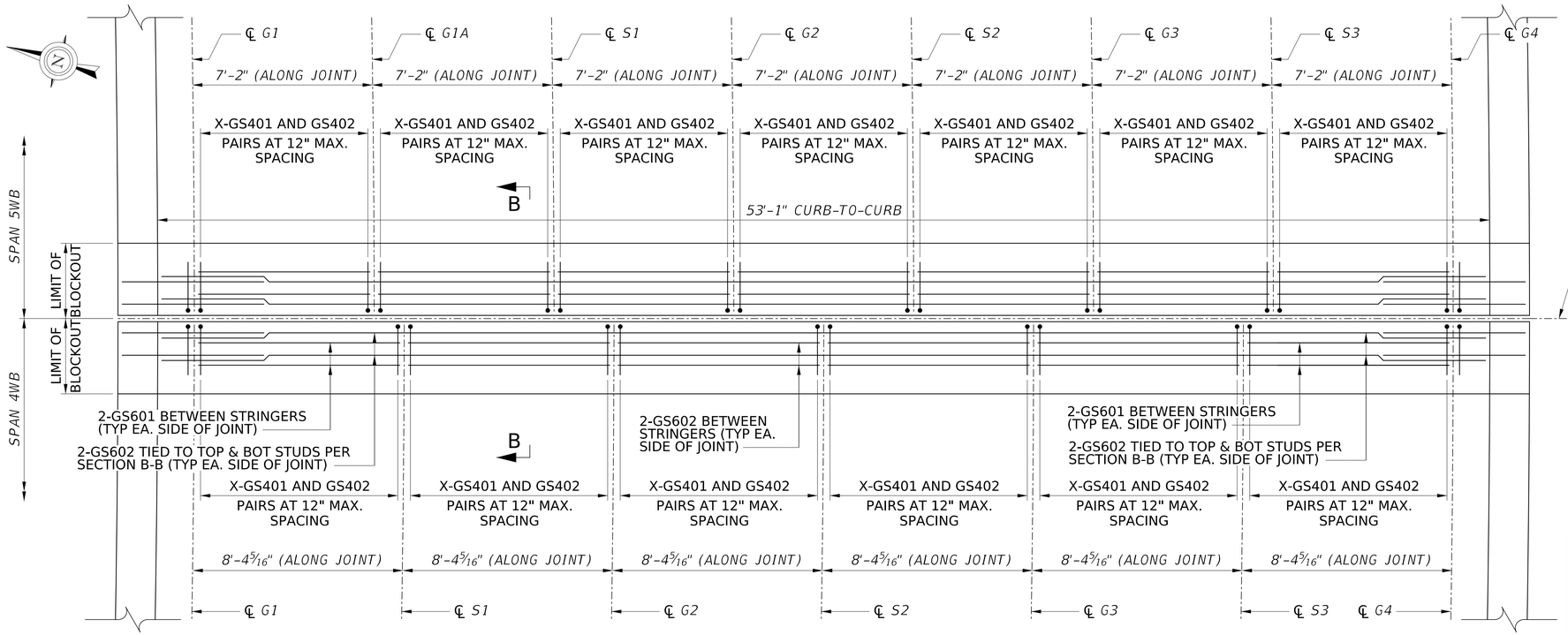

NOTE:

REMOVE ALL COMPONENTS OF EXISTING SLIDING PLATE EXPANSION DAM AS NECESSARY FOR INSTALLATION OF NEW STRIP SEAL.

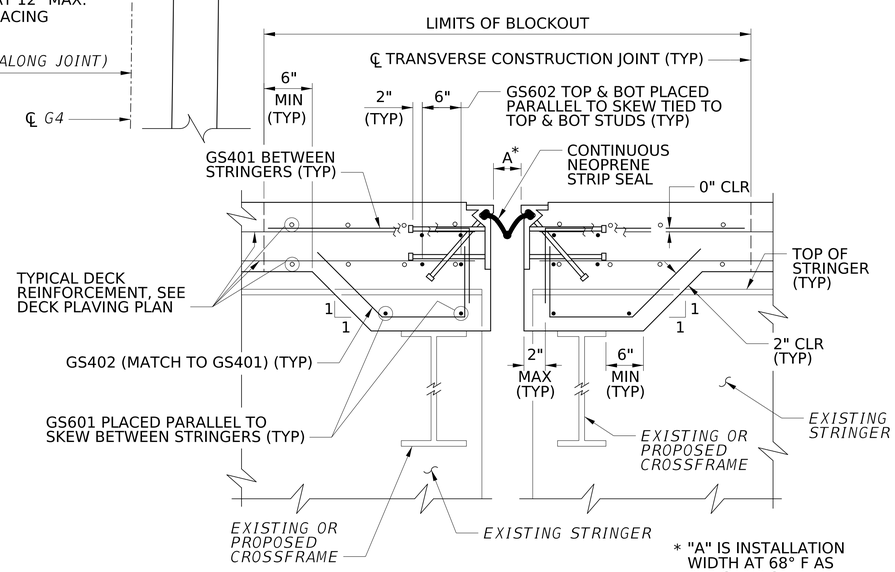

* "A" IS INSTALLATION WIDTH AT 68° F AS PER STRIP SEAL JOINT INFORMATION TABLE

SECTION B-B

NTS

PIER A7 STRIP SEAL JOINT PLAN

TYPICAL DECK REINFORCEMENT NOT SHOWN FOR CLARITY, REFER TO DECK PAVING PLANS

PIER A7 JOINT DETAIL QUANTITIES

ITEM NO.	DESCRIPTION	UNIT	QUANTITY
602002-001	GALVANIZED COATED REINFORCING STEEL BAR	LB	XX
627011-002	REMOVE AND REPLACE EXPANSION DEVICE, STRIP SEAL	LF	XX†

† LENGTH IS APPROXIMATE TO NEAREST FOOT. SEE STRIP SEAL JOINT INFORMATION TABLE.

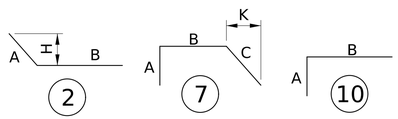

REINFORCEMENT BAR SCHEDULE

MARK	SIZE	LENGTH	NO.	TYPE	A	B	C	H	K	REMARKS
STRIP SEAL JOINT REINFORCEMENT SPAN 4WB										
GS401	4	3'-4	52	10	-	-				
GS402	4	3'-9	52	7	-	-	-		-	
GS601	6	11'-5	8	STR						
GS602	6	27'-3	8	STR						
GS603	6	6'-0	8	2	-	-		-		
STRIP SEAL JOINT REINFORCEMENT SPAN 5WB										
GS401	4	3'-4	52	10	-	-				
GS402	4	3'-9	52	7	-	-	-		-	
GS601	6	11'-5	8	STR						
GS602	6	27'-3	8	STR						
GS603	6	6'-0	8	2	-	-		-		

NOTES:

1. FOR GENERAL NOTES, SEE SHEETS X AND X.
2. FOR STRIP SEAL JOINT DETAILS, SEE SHEET X.
3. "G" IN BAR MARK INDICATES GALVANIZED COATED.
4. DO NOT USE RAIL STEEL (A616) IN BRIDGE ABUTMENTS, FOOTINGS, AND WHERE BENDING OF REINFORCEMENT BARS IS INDICATED.
5. REINFORCING BAR SCHEDULE IS FOR INFORMATION ONLY. VERIFY SCHEDULE PRIOR TO BIDDING AND FABRICATION.
6. NO CORRECTION IN LENGTH FOR BEND CURVATURE IS TO BE MADE.
7. ALL DIMENSIONS ARE OUT TO OUT OF BAR.

NO.	REVISION	DATE	BY

WEST VIRGINIA DEPARTMENT OF TRANSPORTATION
DIVISION OF HIGHWAYS
ENGINEERING DIVISION

I-64 OVER KANAWHA RIVER
EUGENE A. CARTER MEMORIAL BRIDGE +3
PIER A7
STRIP SEAL DETAILS

DESIGNED	DATE
DLS	12/12
DRAWN	
SSS	12/12
CHECKED	
REVIEWED	

HDR ENGINEERING INC.
CONSULTING ENGINEERS
CHARLESTON, WV
681-341-6100

SHEET OF

BRIDGE NO. 2563.6

pw://jpwhdruseas02.intranet.hdr:HDR_US_East_02/Documents/WV_DOT/WVDOT-Eugene_Carter_Bridge_3/6.0_CAD_BIM/6.2_WIP/HDR/6.2.2_Sheet_Files/23_Structure/4.204 strip seal a7
$DD-MMM-YYYY HH:MM$
SNOLEN

PROJECT NUMBERS		DISTRICT	COUNTY	SHEET NO.	TOTAL
STATE	FEDERAL				
S320-64-57.44 00	NHPP-0064 (497)D	1	KANAWHA		

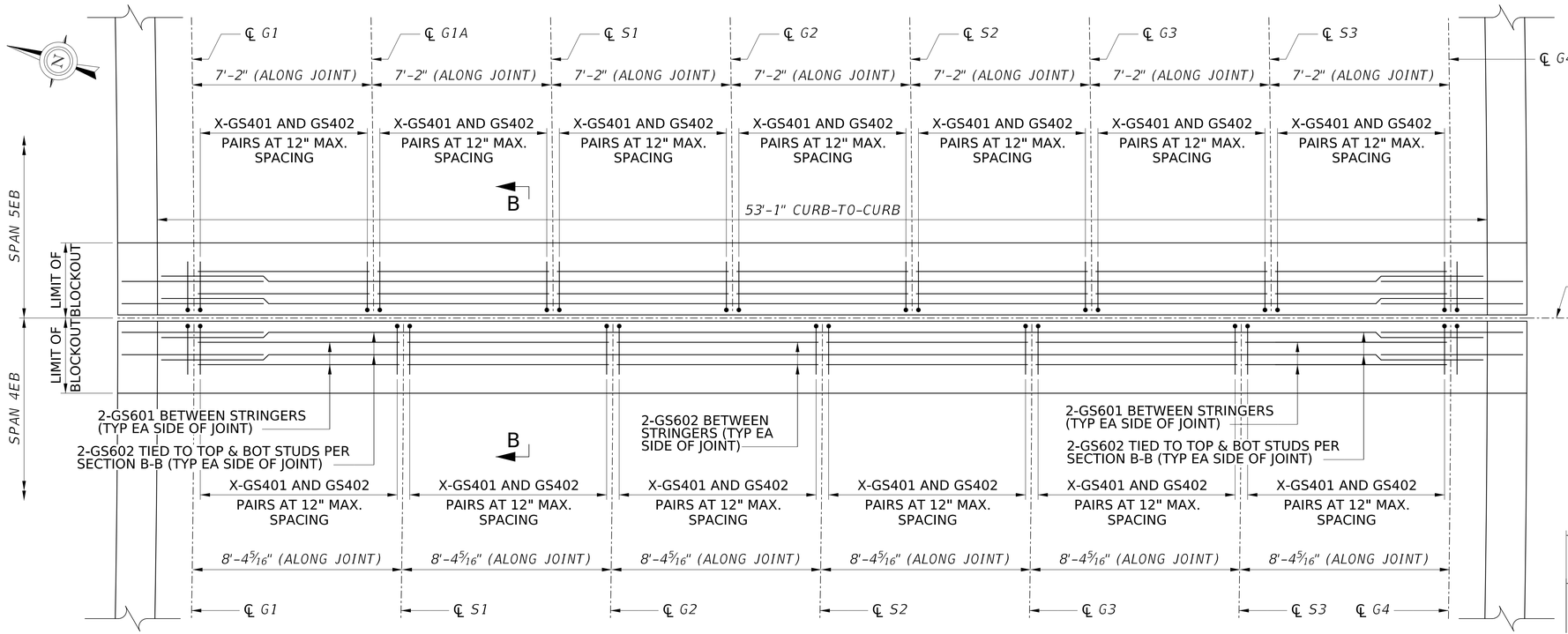

PIER A8 STRIP SEAL JOINT PLAN

TYPICAL DECK REINFORCEMENT NOT SHOWN FOR CLARITY, REFER TO DECK PAVING PLANS

NOTE:

REMOVE ALL COMPONENTS OF EXISTING SLIDING PLATE EXPANSION DAM AS NECESSARY FOR INSTALLATION OF NEW STRIP SEAL.

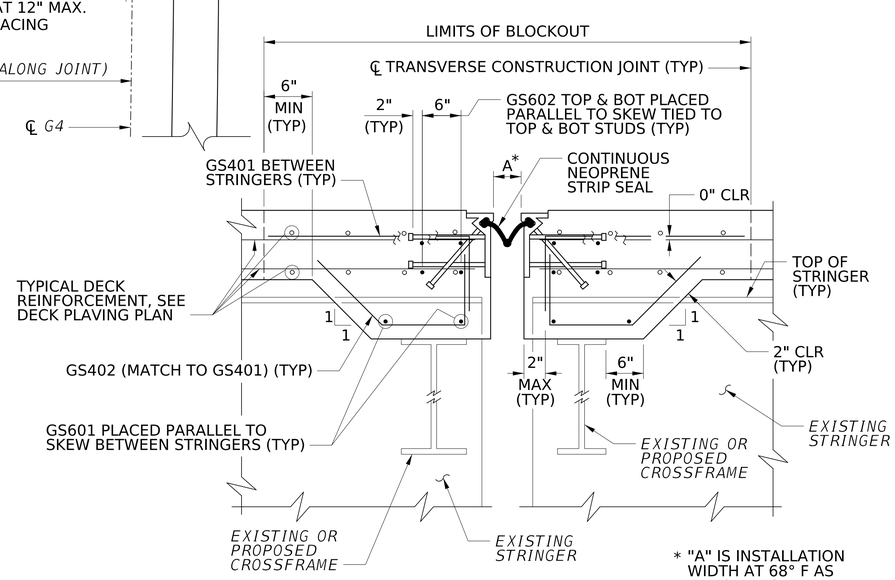

SECTION B-B

NTS

* "A" IS INSTALLATION WIDTH AT 68° F AS PER STRIP SEAL JOINT INFORMATION TABLE

PIER A8 JOINT DETAIL QUANTITIES

ITEM NO.	DESCRIPTION	UNIT	QUANTITY
602002-001	GALVANIZED COATED REINFORCING STEEL BAR	LB	XX
627011-002	REMOVE AND REPLACE EXPANSION DEVICE, STRIP SEAL	LF	XX†

† LENGTH IS APPROXIMATE TO NEAREST FOOT. SEE STRIP SEAL JOINT INFORMATION TABLE.

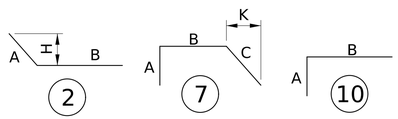

REINFORCEMENT BAR SCHEDULE

MARK	SIZE	LENGTH	NO.	TYPE	A	B	C	H	K	REMARKS
STRIP SEAL JOINT REINFORCEMENT SPAN 4EB										
GS401	4	3'-4	52	10	-	-				
GS402	4	3'-9	52	7	-	-	-		-	
GS601	6	11'-5	8	STR						
GS602	6	27'-3	8	STR						
GS603	6	6'-0	8	2	-	-		-		
STRIP SEAL JOINT REINFORCEMENT SPAN 5EB										
GS401	4	3'-4	52	10	-	-				
GS402	4	3'-9	52	7	-	-	-		-	
GS601	6	11'-5	8	STR						
GS602	6	27'-3	8	STR						
GS603	6	6'-0	8	2	-	-		-		

NOTES:

1. FOR GENERAL NOTES, SEE SHEETS X AND X.
2. FOR STRIP SEAL JOINT DETAILS, SEE SHEET X.
3. "G" IN BAR MARK INDICATES GALVANIZED COATED.
4. DO NOT USE RAIL STEEL (A616) IN BRIDGE ABUTMENTS, FOOTINGS, AND WHERE BENDING OF REINFORCEMENT BARS IS INDICATED.
5. REINFORCING BAR SCHEDULE IS FOR INFORMATION ONLY. VERIFY SCHEDULE PRIOR TO BIDDING AND FABRICATION.
6. NO CORRECTION IN LENGTH FOR BEND CURVATURE IS TO BE MADE.
7. ALL DIMENSIONS ARE OUT TO OUT OF BAR.

NO.	REVISION	DATE	BY

WEST VIRGINIA DEPARTMENT OF TRANSPORTATION
DIVISION OF HIGHWAYS
ENGINEERING DIVISION

I-64 OVER KANAWHA RIVER
EUGENE A. CARTER MEMORIAL BRIDGE +3

PIER A8 STRIP SEAL DETAILS

DESIGNED	DATE
DLS	12/12
DRAWN	
SSS	12/12
CHECKED	
REVIEWED	

HDR ENGINEERING INC.
CONSULTING ENGINEERS
CHARLESTON, WV
681-341-6100

SHEET OF

BRIDGE NO. 2563.6

pw://jpwhdruseas02.intranet.hdr:HDR_US_East_02/Documents/WV_DOT/WVDOT-Eugene_Carter_Bridge_3/6.0_CAD_BIM/6.2_WIP/HDR/6.2.2_Sheet_Files/23_Structure/4.205 strip seal a8
$DD-MMM-YYYY HH:MM$
SNOLEN

PROJECT NUMBERS		DISTRICT	COUNTY	SHEET NO.	TOTAL
STATE	FEDERAL				
S320-64-57.44 00	NHPP-0064 (497)D	1	KANAWHA		

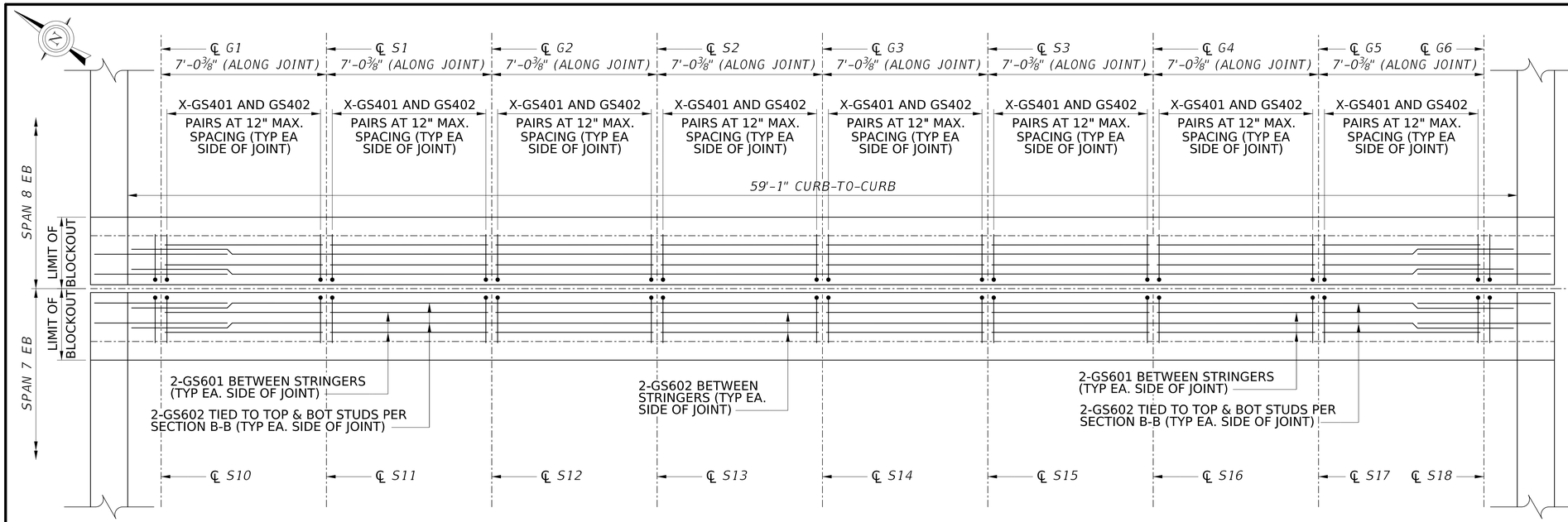

NOTE:

REMOVE ALL COMPONENTS OF EXISTING SLIDING PLATE EXPANSION DAM AS NECESSARY FOR INSTALLATION OF NEW STRIP SEAL.

PIER C (EB) STRIP SEAL JOINT PLAN

TYPICAL DECK REINFORCEMENT NOT SHOWN FOR CLARITY, REFER TO DECK PAVING PLANS

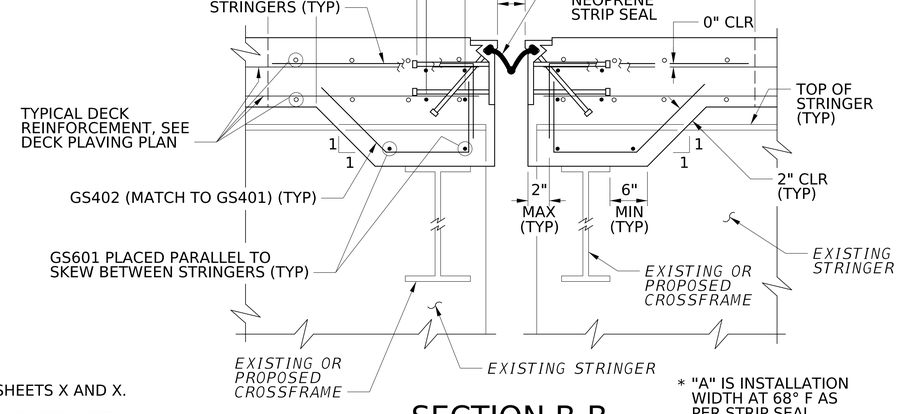

SECTION B-B

NTS

* "A" IS INSTALLATION WIDTH AT 68° F AS PER STRIP SEAL JOINT INFORMATION TABLE

PIER C JOINT DETAIL QUANTITIES

ITEM NO.	DESCRIPTION	UNIT	QUANTITY
602002-001	GALVANIZED COATED REINFORCING STEEL BAR	LB	1564
627011-002	REMOVE AND REPLACE EXPANSION DEVICE, STRIP SEAL	LF	53†

† LENGTH IS APPROXIMATE TO NEAREST FOOT. SEE STRIP SEAL JOINT INFORMATION TABLE.

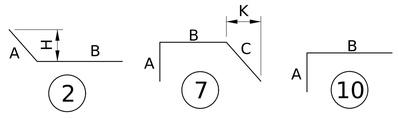

REINFORCEMENT BAR SCHEDULE

MARK	SIZE	LENGTH	NO.	TYPE	A	B	C	H	K	REMARKS
STRIP SEAL JOINT REINFORCEMENT SPAN 7EB										
GS401	4	3'-4	52	10	-	-				
GS402	4	3'-9	52	7	-	-	-		-	
GS601	6	11'-5	8	STR						
GS602	6	27'-3	8	STR						
GS603	6	6'-0	8	2	-	-		-		
STRIP SEAL JOINT REINFORCEMENT SPAN 8EB										
GS401	4	3'-4	52	10	-	-				
GS402	4	3'-9	52	7	-	-	-		-	
GS601	6	11'-5	8	STR						
GS602	6	27'-3	8	STR						
GS603	6	6'-0	8	2	-	-		-		

NOTES:

1. FOR GENERAL NOTES, SEE SHEETS X AND X.
2. FOR STRIP SEAL JOINT DETAILS, SEE SHEET X.
3. "G" IN BAR MARK INDICATES GALVANIZED COATED.
4. DO NOT USE RAIL STEEL (A616) IN BRIDGE ABUTMENTS, FOOTINGS, AND WHERE BENDING OF REINFORCEMENT BARS IS INDICATED.
5. REINFORCING BAR SCHEDULE IS FOR INFORMATION ONLY. VERIFY SCHEDULE PRIOR TO BIDDING AND FABRICATION.
6. NO CORRECTION IN LENGTH FOR BEND CURVATURE IS TO BE MADE.
7. ALL DIMENSIONS ARE OUT TO OUT OF BAR.

NO.	REVISION	DATE	BY

WEST VIRGINIA DEPARTMENT OF TRANSPORTATION
DIVISION OF HIGHWAYS
ENGINEERING DIVISION

I-64 OVER KANAWHA RIVER
EUGENE A. CARTER MEMORIAL BRIDGE +3
PIER C (EB)
STRIP SEAL DETAILS

DESIGNED	DATE
DLS	12/12
DRAWN	
SSS	12/12
CHECKED	
REVIEWED	

HDR ENGINEERING INC.
CONSULTING ENGINEERS
CHARLESTON, WV
681-341-6100

SHEET OF

BRIDGE NO. 2563.6

pw://pwhdruseas02.intranet.hdr:HDR_US_East_02/Documents/WV_DOT/WVDOT-Eugene_Carter_Bridge_3/6.0_CAD_BIM/6.2_WIP/HDR/6.2.2_Sheet_Files/23_Structure/4.206 strip seal c
$DD-MMM-YYYY HH:MM$
SNOLEN

PROJECT NUMBERS		DISTRICT	COUNTY	SHEET NO.	TOTAL
STATE	FEDERAL				
S320-64-57.44 00	NHPP-0064 (497)D	1	KANAWHA		

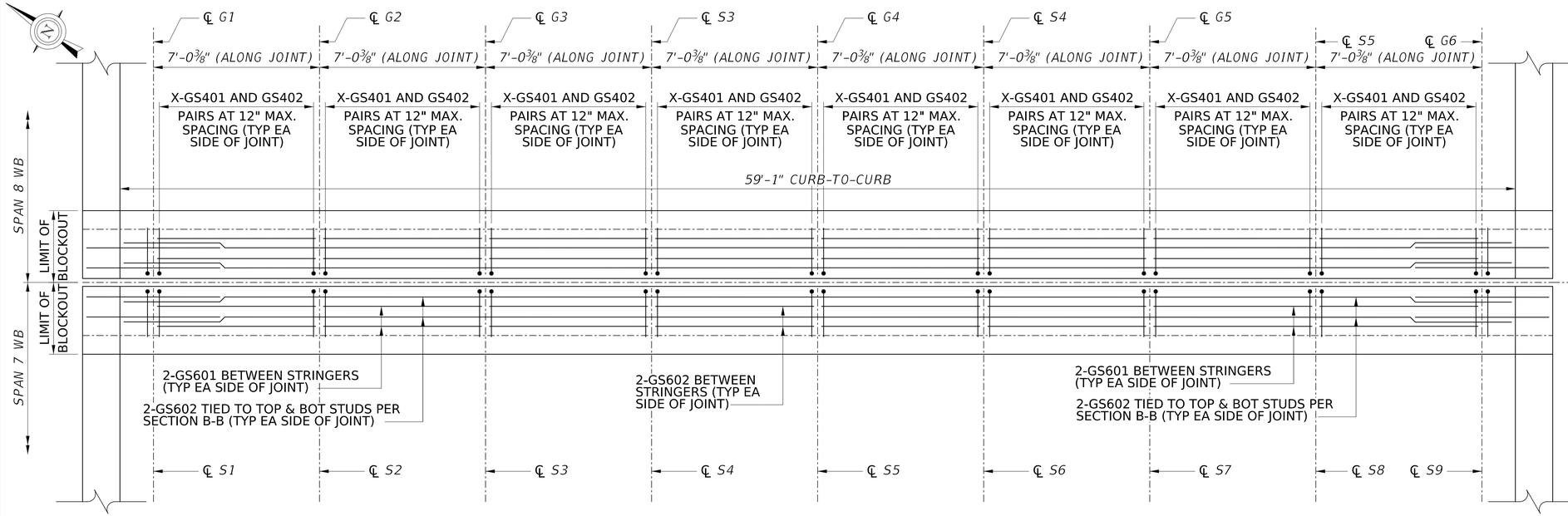

NOTE:

REMOVE ALL COMPONENTS OF EXISTING SLIDING PLATE EXPANSION DAM AS NECESSARY FOR INSTALLATION OF NEW STRIP SEAL.

PIER C STRIP SEAL JOINT PLAN

TYPICAL DECK REINFORCEMENT NOT SHOWN FOR CLARITY, REFER TO DECK PAVING PLANS

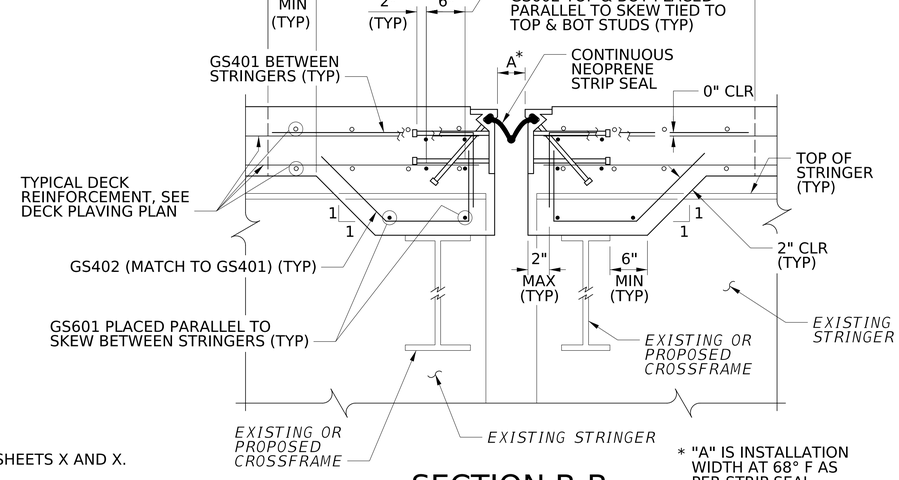

SECTION B-B

NTS

* "A" IS INSTALLATION WIDTH AT 68° F AS PER STRIP SEAL JOINT INFORMATION TABLE

PIER C JOINT DETAIL QUANTITIES

ITEM NO.	DESCRIPTION	UNIT	QUANTITY
602002-001	GALVANIZED COATED REINFORCING STEEL BAR	LB	XX
627011-002	REMOVE AND REPLACE EXPANSION DEVICE, STRIP SEAL	LF	XX†

† LENGTH IS APPROXIMATE TO NEAREST FOOT. SEE STRIP SEAL JOINT INFORMATION TABLE.

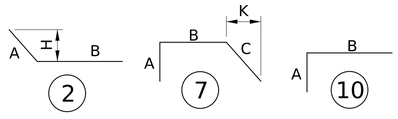

REINFORCEMENT BAR SCHEDULE

MARK	SIZE	LENGTH	NO.	TYPE	A	B	C	H	K	REMARKS
STRIP SEAL JOINT REINFORCEMENT SPAN 7WB										
GS401	4	3'-4	52	10	-	-				
GS402	4	3'-9	52	7	-	-	-		-	
GS601	6	11'-5	8	STR						
GS602	6	27'-3	8	STR						
GS603	6	6'-0	8	2	-	-		-		
STRIP SEAL JOINT REINFORCEMENT SPAN 8WB										
GS401	4	3'-4	52	10	-	-				
GS402	4	3'-9	52	7	-	-	-		-	
GS601	6	11'-5	8	STR						
GS602	6	27'-3	8	STR						
GS603	6	6'-0	8	2	-	-		-		

NOTES:

1. FOR GENERAL NOTES, SEE SHEETS X AND X.
2. FOR STRIP SEAL JOINT DETAILS, SEE SHEET X.
3. "G" IN BAR MARK INDICATES GALVANIZED COATED.
4. DO NOT USE RAIL STEEL (A616) IN BRIDGE ABUTMENTS, FOOTINGS, AND WHERE BENDING OF REINFORCEMENT BARS IS INDICATED.
5. REINFORCING BAR SCHEDULE IS FOR INFORMATION ONLY. VERIFY SCHEDULE PRIOR TO BIDDING AND FABRICATION.
6. NO CORRECTION IN LENGTH FOR BEND CURVATURE IS TO BE MADE.
7. ALL DIMENSIONS ARE OUT TO OUT OF BAR.

NO.	REVISION	DATE	BY

WEST VIRGINIA DEPARTMENT OF TRANSPORTATION
DIVISION OF HIGHWAYS
ENGINEERING DIVISION

I-64 OVER KANAWHA RIVER
EUGENE A. CARTER MEMORIAL BRIDGE +3
PIER C (WB)
STRIP SEAL DETAILS

DESIGNED	DLS
DATE	12/12
DRAWN	SSS
DATE	12/12
CHECKED	
REVIEWED	

HDR ENGINEERING INC.
CONSULTING ENGINEERS
CHARLESTON, WV
681-341-6100

SHEET OF

BRIDGE NO. 2563.6

pw://pwhdruseas02.intranet.hdr:HDR_US_East_02/Documents/WV_DOT/WVDOT-Eugene_Carter_Bridge_3/6.0_CAD_BIM/6.2_CAD_BIM6.2_WIP/HDR/6.2.2_Sheet_Files/23_Structure/4.207 strip seal c
$DD-MMM-YYYY HH:MM$
SNOLEN

PROJECT NUMBERS		DISTRICT	COUNTY	SHEET NO.	TOTAL
STATE	FEDERAL				
S320-64-57.44 00	NHPP-0064 (497)D	1	KANAWHA		

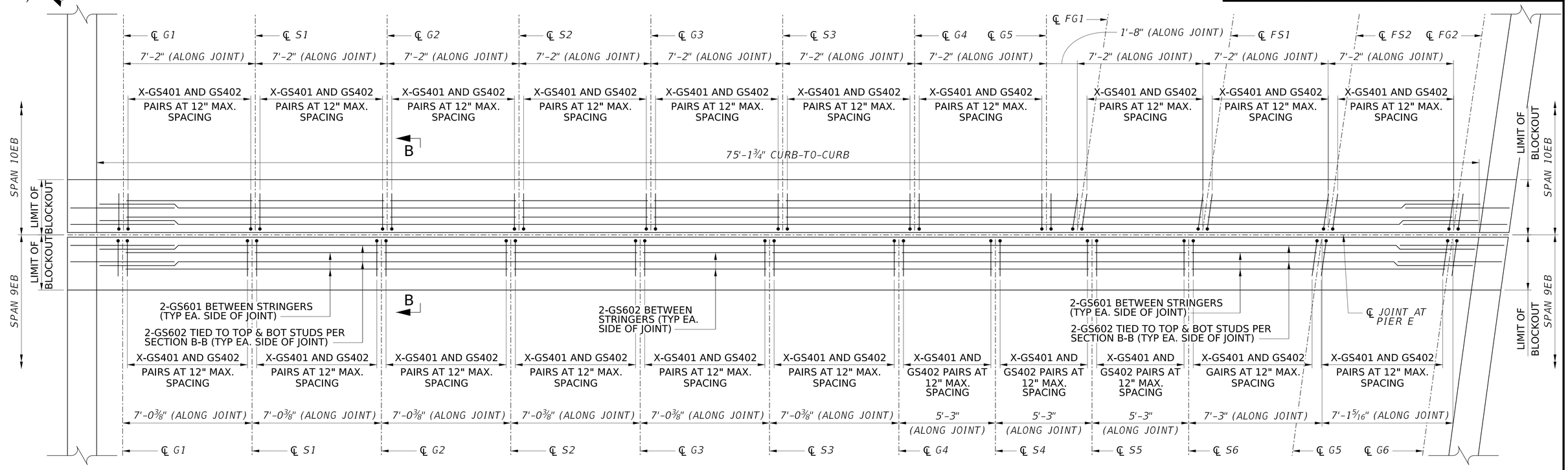

PIER E (EB) STRIP SEAL JOINT PLAN

TYPICAL DECK REINFORCEMENT NOT SHOWN FOR CLARITY, REFER TO DECK PAVING PLANS

PIER E (EB) JOINT DETAIL QUANTITIES

ITEM NO.	DESCRIPTION	UNIT	QUANTITY
602002-001	GALVANIZED COATED REINFORCING STEEL BAR	LB	XX
627011-002	REMOVE AND REPLACE EXPANSION DEVICE, STRIP SEAL	LF	XX†

† LENGTH IS APPROXIMATE TO NEAREST FOOT. SEE STRIP SEAL JOINT INFORMATION TABLE.

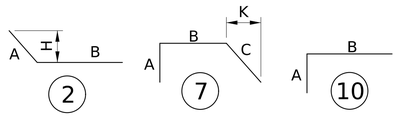

REINFORCEMENT BAR SCHEDULE

MARK	SIZE	LENGTH	NO.	TYPE	A	B	C	H	K	REMARKS
STRIP SEAL JOINT REINFORCEMENT SPAN 9										
GS401	4	3'-4	52	10	-	-				
GS402	4	3'-9	52	7	-	-	-		-	
GS601	6	11'-5	8	STR						
GS602	6	27'-3	8	STR						
GS603	6	6'-0	8	2	-	-		-		
STRIP SEAL JOINT REINFORCEMENT SPANS 10 AND DF										
GS401	4	3'-4	52	10	-	-				
GS402	4	3'-9	52	7	-	-	-		-	
GS601	6	11'-5	8	STR						
GS602	6	27'-3	8	STR						
GS603	6	6'-0	8	2	-	-		-		

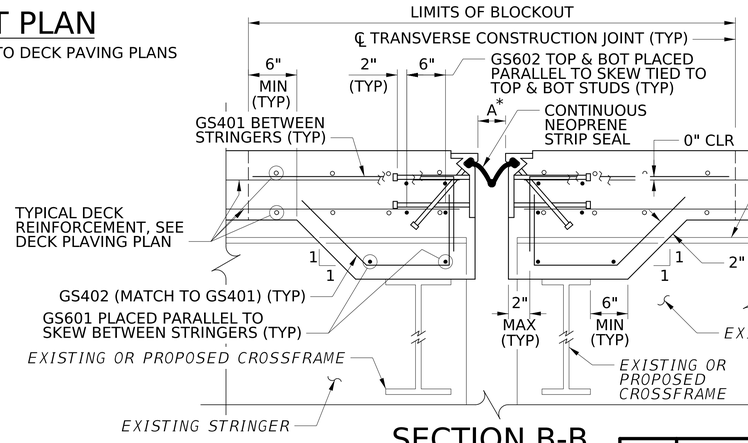

SECTION B-B

NTS

NOTE:

REMOVE ALL COMPONENTS OF EXISTING SLIDING PLATE EXPANSION DAM AS NECESSARY FOR INSTALLATION OF NEW STRIP SEAL.

NOTES:

1. FOR GENERAL NOTES, SEE SHEETS X AND X.
2. FOR STRIP SEAL JOINT DETAILS, SEE SHEET X.
3. "G" IN BAR MARK INDICATES GALVANIZED COATED.
4. DO NOT USE RAIL STEEL (A616) IN BRIDGE ABUTMENTS, FOOTINGS, AND WHERE BENDING OF REINFORCEMENT BARS IS INDICATED.
5. REINFORCING BAR SCHEDULE IS FOR INFORMATION ONLY. VERIFY SCHEDULE PRIOR TO BIDDING AND FABRICATION.
6. NO CORRECTION IN LENGTH FOR BEND CURVATURE IS TO BE MADE.
7. ALL DIMENSIONS ARE OUT TO OUT OF BAR.

NO.	REVISION	DATE	BY

WEST VIRGINIA DEPARTMENT OF TRANSPORTATION
DIVISION OF HIGHWAYS
ENGINEERING DIVISION

I-64 OVER KANAWHA RIVER
EUGENE A. CARTER MEMORIAL BRIDGE +3

PIER E (EB)
STRIP SEAL DETAILS

DESIGNED	DATE
DLS	12/12
DRAWN	
SSS	12/12
CHECKED	
REVIEWED	

HDR ENGINEERING INC.
CONSULTING ENGINEERS
CHARLESTON, WV
681-341-6100

SHEET OF
BRIDGE NO. 2563.6

pw://pwhdruseas02.intranet.hdr:HDR_US_East_02/Documents/WV_DOT/WVDOT-Eugene_Carter_Bridge_3/6.0_CAD_BIM/6.2_WIP/HDR/6.2.2_Sheet_Files/23_Structure/4.208 strip seal e
$DD-MMM-YYYY HH:MM$
SNOLEN

PROJECT NUMBERS		DISTRICT	COUNTY	SHEET NO.	TOTAL
STATE	FEDERAL				
S320-64-57.44 00	NHPP-0064 (497)D	1	KANAWHA		

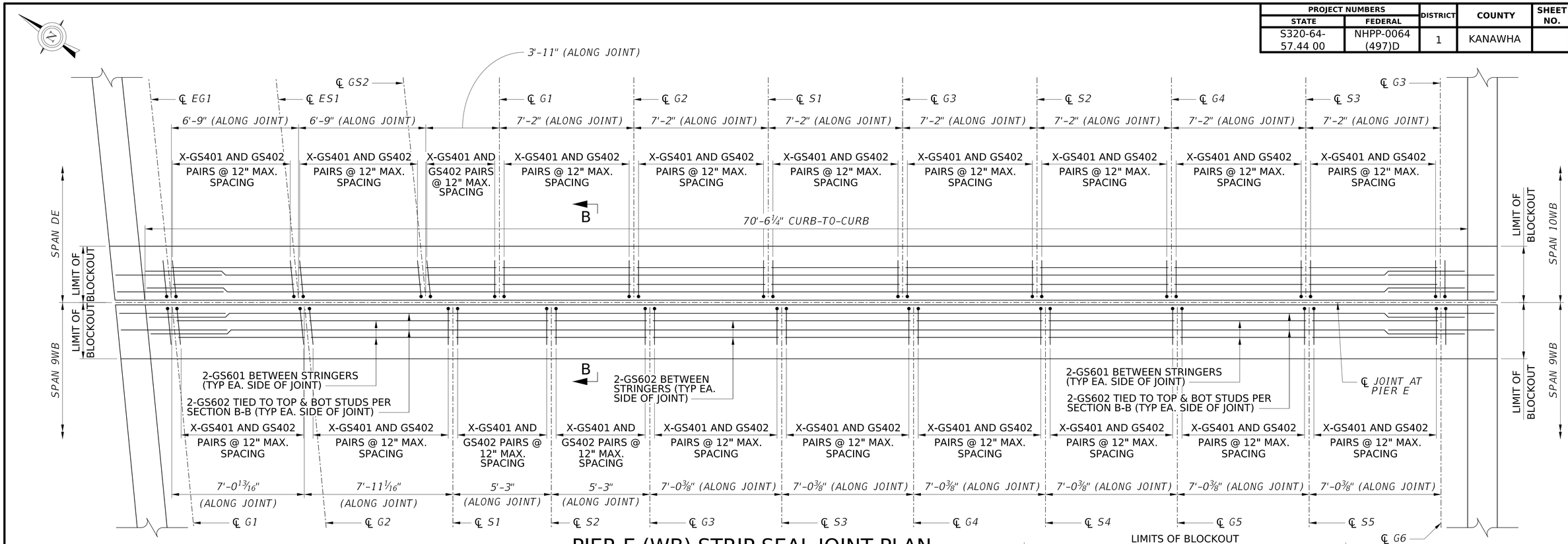

PIER E (WB) STRIP SEAL JOINT PLAN

TYPICAL DECK REINFORCEMENT NOT SHOWN FOR CLARITY, REFER TO DECK PAVING PLANS

PIER E (WB) JOINT DETAIL QUANTITIES

ITEM NO.	DESCRIPTION	UNIT	QUANTITY
602002-001	GALVANIZED COATED REINFORCING STEEL BAR	LB	XX
627011-002	REMOVE AND REPLACE EXPANSION DEVICE, STRIP SEAL	LF	XX†

† LENGTH IS APPROXIMATE TO NEAREST FOOT. SEE STRIP SEAL JOINT INFORMATION TABLE.

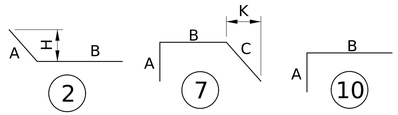

REINFORCEMENT BAR SCHEDULE

MARK	SIZE	LENGTH	NO.	TYPE	A	B	C	H	K	REMARKS
STRIP SEAL JOINT REINFORCEMENT SPAN X										
GS401	4	3'-4	52	10	-	-				
GS402	4	3'-9	52	7	-	-	-		-	
GS601	6	11'-5	8	STR						
GS602	6	27'-3	8	STR						
GS603	6	6'-0	8	2	-	-		-		
STRIP SEAL JOINT REINFORCEMENT SPAN X										
GS401	4	3'-4	52	10	-	-				
GS402	4	3'-9	52	7	-	-	-		-	
GS601	6	11'-5	8	STR						
GS602	6	27'-3	8	STR						
GS603	6	6'-0	8	2	-	-		-		

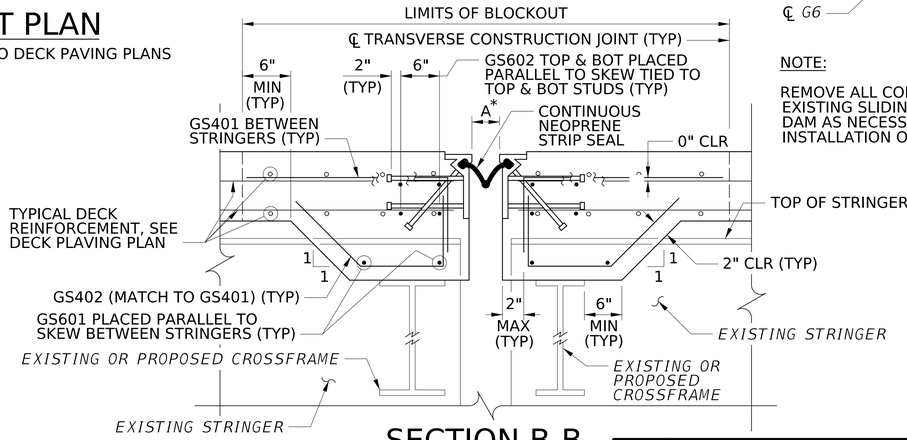

SECTION B-B

NTS

NOTE:

REMOVE ALL COMPONENTS OF EXISTING SLIDING PLATE EXPANSION DAM AS NECESSARY FOR INSTALLATION OF NEW STRIP SEAL.

NOTES:

1. FOR GENERAL NOTES, SEE SHEETS X AND X.
2. FOR STRIP SEAL JOINT DETAILS, SEE SHEET X.
3. "G" IN BAR MARK INDICATES GALVANIZED COATED.
4. DO NOT USE RAIL STEEL (A616) IN BRIDGE ABUTMENTS, FOOTINGS, AND WHERE BENDING OF REINFORCEMENT BARS IS INDICATED.
5. REINFORCING BAR SCHEDULE IS FOR INFORMATION ONLY. VERIFY SCHEDULE PRIOR TO BIDDING AND FABRICATION.
6. NO CORRECTION IN LENGTH FOR BEND CURVATURE IS TO BE MADE.
7. ALL DIMENSIONS ARE OUT TO OUT OF BAR.

NO.	REVISION	DATE	BY

WEST VIRGINIA DEPARTMENT OF TRANSPORTATION
DIVISION OF HIGHWAYS
ENGINEERING DIVISION

I-64 OVER KANAWHA RIVER
EUGENE A. CARTER MEMORIAL BRIDGE +3

PIER E (WB) STRIP SEAL DETAILS

DESIGNED	DATE
DLS	12/12
DRAWN	
SSS	12/12
CHECKED	
REVIEWED	

HDR ENGINEERING INC.
CONSULTING ENGINEERS
CHARLESTON, WV
681-341-6100

SHEET OF

BRIDGE NO. 2563.6

$DD-MMM-YYYY HH:MM$
SNOLEN
pw://pwhdruseas02.intranet.hdr:HDR_US_East_02/Documents/WV_DOT/WVDOT-Eugene_Carter_Bridge_3/6.0_CAD_BIM/6.2_WIP/HDR/6.2.2_Sheet_Files/23_Structure/4.209 strip seal e

PROJECT NUMBERS		DISTRICT	COUNTY	SHEET NO.	TOTAL
STATE	FEDERAL				
S320-64-57.44 00	NHPP-0064 (497)D	1	KANAWHA		

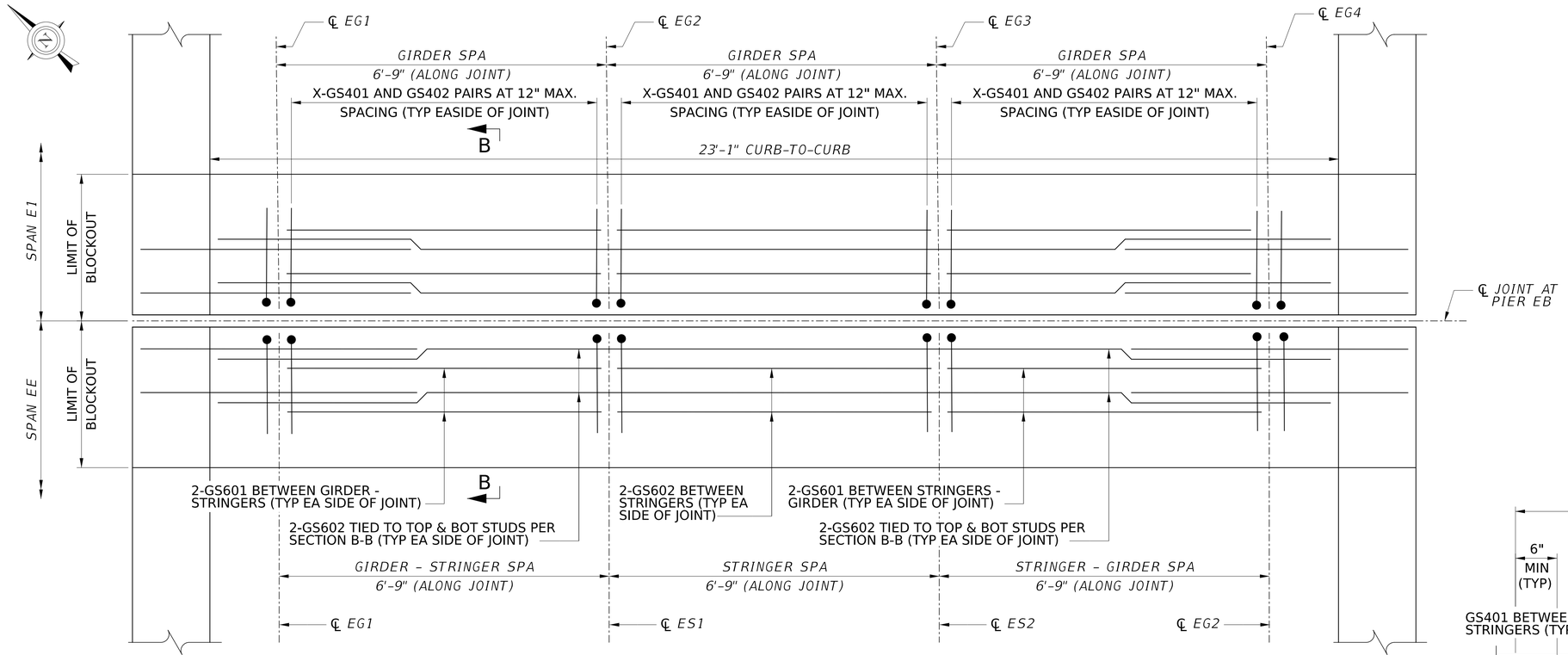

PIER EB STRIP SEAL JOINT PLAN

TYPICAL DECK REINFORCEMENT NOT SHOWN FOR CLARITY, REFER TO DECK PAVING PLANS

PIER EB JOINT DETAIL QUANTITIES			
ITEM NO.	DESCRIPTION	UNIT	QUANTITY
602002-001	GALVANIZED COATED REINFORCING STEEL BAR	LB	XX
627011-002	REMOVE AND REPLACE EXPANSION DEVICE, STRIP SEAL	LF	XX†

† LENGTH IS APPROXIMATE TO NEAREST FOOT. SEE STRIP SEAL JOINT INFORMATION TABLE.

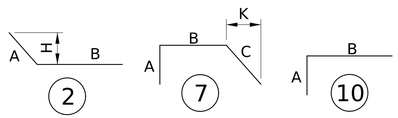

REINFORCEMENT BAR SCHEDULE										
MARK	SIZE	LENGTH	NO.	TYPE	A	B	C	H	K	REMARKS
STRIP SEAL JOINT REINFORCEMENT SPAN EE										
GS401	4	3'-4	52	10	-	-				
GS402	4	3'-9	52	7	-	-	-		-	
GS601	6	11'-5	8	STR						
GS602	6	27'-3	8	STR						
GS603	6	6'-0	8	2	-	-		-		
STRIP SEAL JOINT REINFORCEMENT SPAN E1										
GS401	4	3'-4	52	10	-	-				
GS402	4	3'-9	52	7	-	-	-		-	
GS601	6	11'-5	8	STR						
GS602	6	27'-3	8	STR						
GS603	6	6'-0	8	2	-	-		-		

NOTES:

1. FOR GENERAL NOTES, SEE SHEETS X AND X.
2. FOR STRIP SEAL JOINT DETAILS, SEE SHEET X.
3. "G" IN BAR MARK INDICATES GALVANIZED COATED.
4. DO NOT USE RAIL STEEL (A616) IN BRIDGE ABUTMENTS, FOOTINGS, AND WHERE BENDING OF REINFORCEMENT BARS IS INDICATED.
5. REINFORCING BAR SCHEDULE IS FOR INFORMATION ONLY. VERIFY SCHEDULE PRIOR TO BIDDING AND FABRICATION.
6. NO CORRECTION IN LENGTH FOR BEND CURVATURE IS TO BE MADE.
7. ALL DIMENSIONS ARE OUT TO OUT OF BAR.

NOTE:

REMOVE ALL COMPONENTS OF EXISTING SLIDING PLATE EXPANSION DAM AS NECESSARY FOR INSTALLATION OF NEW STRIP SEAL.

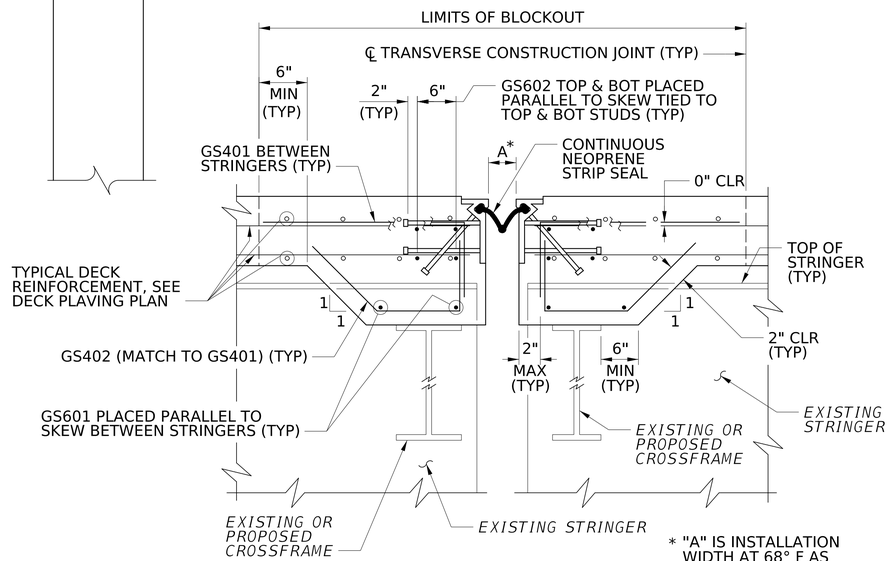

SECTION B-B

NTS

* "A" IS INSTALLATION WIDTH AT 68° F AS PER STRIP SEAL JOINT INFORMATION TABLE

NO.	REVISION	DATE	BY

WEST VIRGINIA DEPARTMENT OF TRANSPORTATION
DIVISION OF HIGHWAYS
ENGINEERING DIVISION

I-64 OVER KANAWHA RIVER
EUGENE A. CARTER MEMORIAL BRIDGE +3
PIER EB
STRIP SEAL DETAILS

DESIGNED	DATE
DLS	12/12
DRAWN	
SSS	12/12
CHECKED	
REVIEWED	

HDR ENGINEERING INC.
CONSULTING ENGINEERS
CHARLESTON, WV
681-341-6100

SHEET OF
BRIDGE NO. 2563.6

pw://pwhdruseas02.intranet.hdr:HDR_US_East_02/Documents/WV_DOT/WVDOT-Eugene_Carter_Bridge_3/6.0_CAD_BIM/6.2_WIP/HDR/6.2.2_Sheet_Files/23_Structure/4.210 strip seal eb
$DD-MMM-YYYY HH:MM$
SNOLEN

PROJECT NUMBERS		DISTRICT	COUNTY	SHEET NO.	TOTAL
STATE	FEDERAL				
S320-64-57.44 00	NHPP-0064 (497)D	1	KANAWHA		

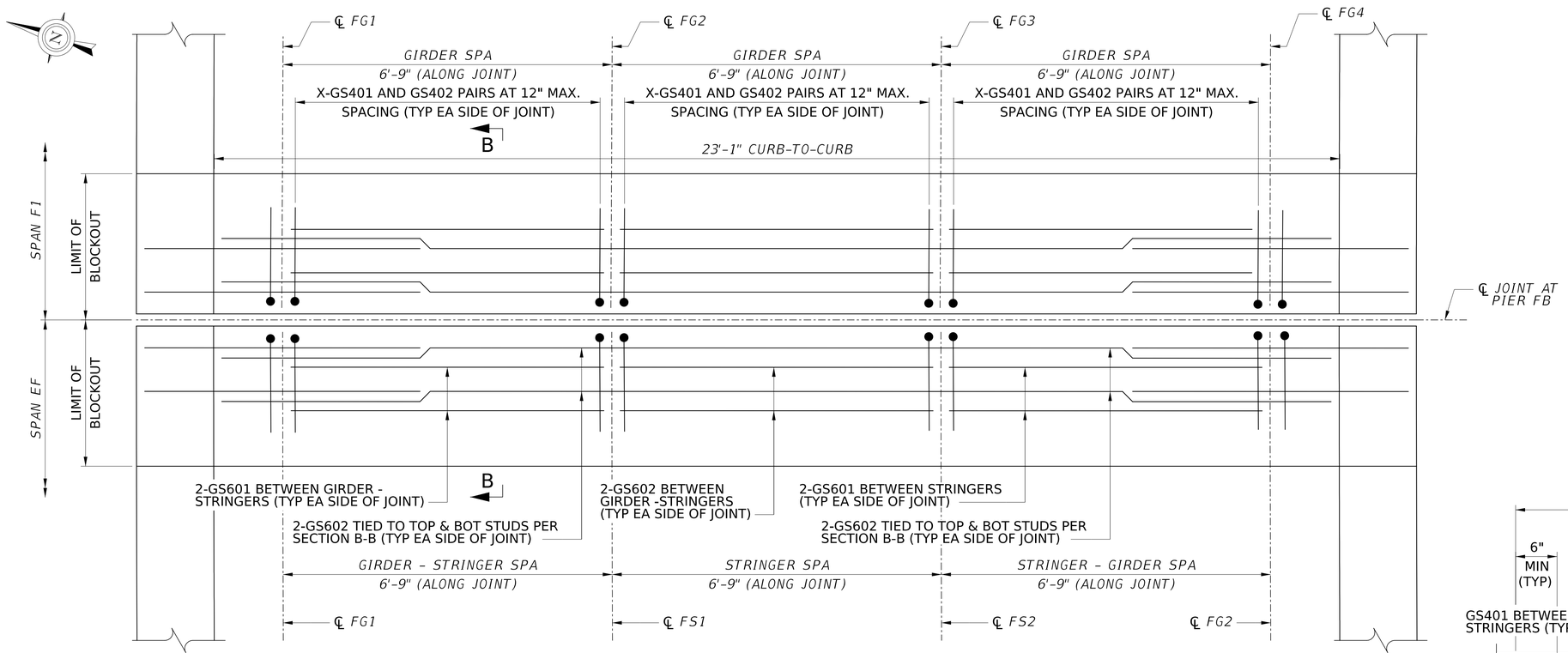

PIER FB STRIP SEAL JOINT PLAN

TYPICAL DECK REINFORCEMENT NOT SHOWN FOR CLARITY, REFER TO DECK PAVING PLANS

PIER FB JOINT DETAIL QUANTITIES

ITEM NO.	DESCRIPTION	UNIT	QUANTITY
602002-001	GALVANIZED COATED REINFORCING STEEL BAR	LB	XX
627011-002	REMOVE AND REPLACE EXPANSION DEVICE, STRIP SEAL	LF	XX†

† LENGTH IS APPROXIMATE TO NEAREST FOOT. SEE STRIP SEAL JOINT INFORMATION TABLE.

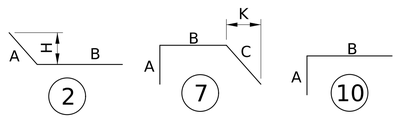

REINFORCEMENT BAR SCHEDULE

MARK	SIZE	LENGTH	NO.	TYPE	A	B	C	H	K	REMARKS
STRIP SEAL JOINT REINFORCEMENT SPAN EF										
GS401	4	3'-4	52	10	-	-				
GS402	4	3'-9	52	7	-	-	-		-	
GS601	6	11'-5	8	STR						
GS602	6	27'-3	8	STR						
GS603	6	6'-0	8	2	-	-		-		
STRIP SEAL JOINT REINFORCEMENT SPAN F1										
GS401	4	3'-4	52	10	-	-				
GS402	4	3'-9	52	7	-	-	-		-	
GS601	6	11'-5	8	STR						
GS602	6	27'-3	8	STR						
GS603	6	6'-0	8	2	-	-		-		

NOTES:

1. FOR GENERAL NOTES, SEE SHEETS X AND X.
2. FOR STRIP SEAL JOINT DETAILS, SEE SHEET X.
3. "G" IN BAR MARK INDICATES GALVANIZED COATED.
4. DO NOT USE RAIL STEEL (A616) IN BRIDGE ABUTMENTS, FOOTINGS, AND WHERE BENDING OF REINFORCEMENT BARS IS INDICATED.
5. REINFORCING BAR SCHEDULE IS FOR INFORMATION ONLY. VERIFY SCHEDULE PRIOR TO BIDDING AND FABRICATION.
6. NO CORRECTION IN LENGTH FOR BEND CURVATURE IS TO BE MADE.
7. ALL DIMENSIONS ARE OUT TO OUT OF BAR.

NOTE:

REMOVE ALL COMPONENTS OF EXISTING SLIDING PLATE EXPANSION DAM AS NECESSARY FOR INSTALLATION OF NEW STRIP SEAL.

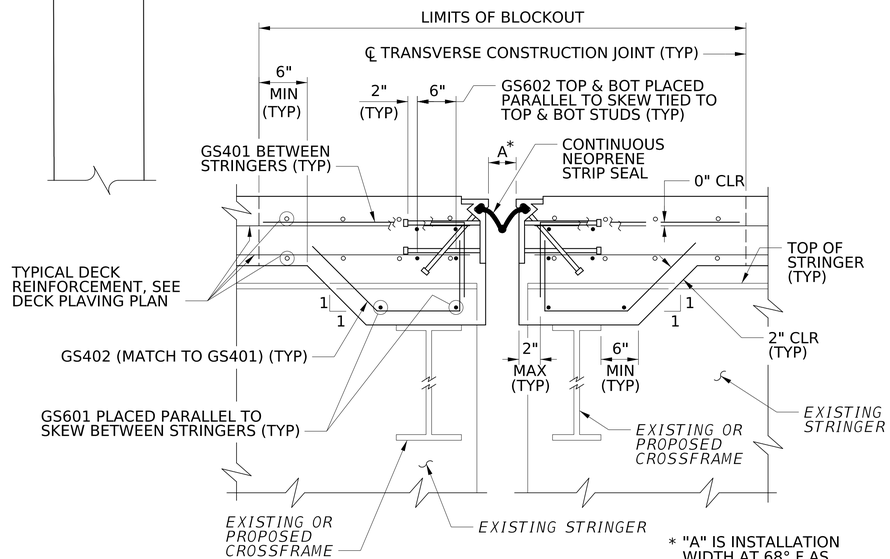

* "A" IS INSTALLATION WIDTH AT 68° F AS PER STRIP SEAL JOINT INFORMATION TABLE

SECTION B-B

NTS

NO.	REVISION	DATE	BY

WEST VIRGINIA DEPARTMENT OF TRANSPORTATION
DIVISION OF HIGHWAYS
ENGINEERING DIVISION

I-64 OVER KANAWHA RIVER
EUGENE A. CARTER MEMORIAL BRIDGE +3
PIER FB
STRIP SEAL DETAILS

DESIGNED	DATE
DLS	12/12
DRAWN	
SSS	12/12
CHECKED	
REVIEWED	

HDR ENGINEERING INC.
CONSULTING ENGINEERS
CHARLESTON, WV
681-341-6100

SHEET OF

BRIDGE NO. 2563.6

pw://pwhdruseas02.intranet.hdr:HDR_US_East_02/Documents/WV_DOT/WVDOT-Eugene_Carter_Bridge_3/6.0_CAD_BIM/6.2_WIP/HDR/6.2.2_Sheet_Files/23_Structure/4.211 strip seal fb
$DD-MMM-YYYY HH:MM$
SNOLEN

PROJECT NUMBERS		DISTRICT	COUNTY	SHEET NO.	TOTAL
STATE	FEDERAL				
S320-64-57.44 00	NHPP-0064 (497)D	1	KANAWHA		

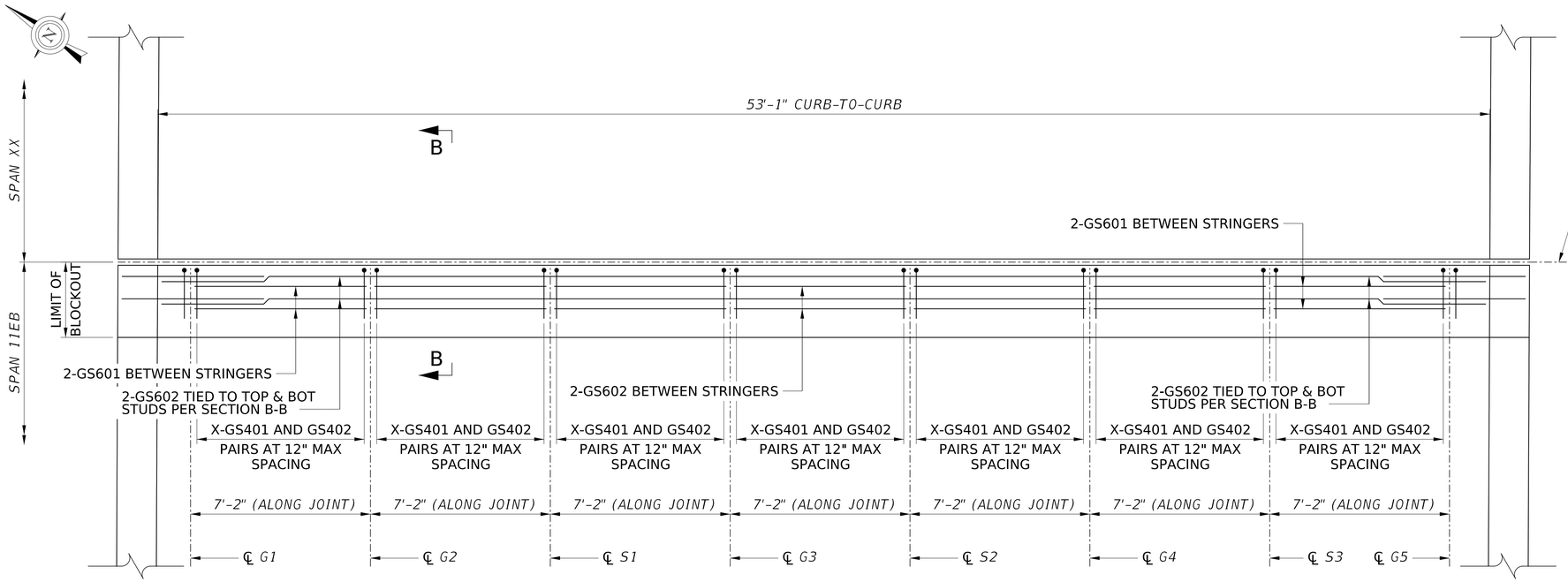

PIER R1 EB STRIP SEAL JOINT PLAN

TYPICAL DECK REINFORCEMENT NOT SHOWN FOR CLARITY, REFER TO DECK PAVING PLANS

NOTE:

REMOVE ALL COMPONENTS OF EXISTING SLIDING PLATE EXPANSION DAM AS NECESSARY FOR INSTALLATION OF NEW STRIP SEAL.

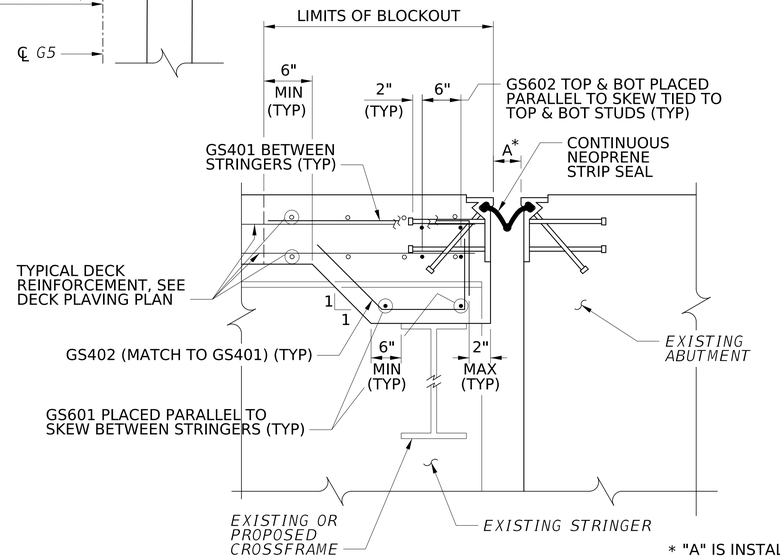

SECTION B-B

NTS

* "A" IS INSTALLATION WIDTH AT 68° F AS PER STRIP SEAL JOINT INFORMATION TABLE

PIER (EB) JOINT DETAIL QUANTITIES

ITEM NO.	DESCRIPTION	UNIT	QUANTITY
602002-001	GALVANIZED COATED REINFORCING STEEL BAR	LB	XX
627011-002	REMOVE AND REPLACE EXPANSION DEVICE, STRIP SEAL	LF	XX†

† LENGTH IS APPROXIMATE TO NEAREST FOOT. SEE STRIP SEAL JOINT INFORMATION TABLE.

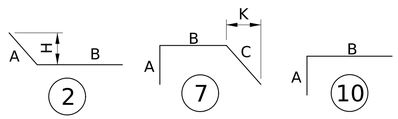

REINFORCEMENT BAR SCHEDULE

MARK	SIZE	LENGTH	NO.	TYPE	A	B	C	H	K	REMARKS
STRIP SEAL JOINT REINFORCEMENT SPAN 11EB										
GS401	4	3'-4	52	10	-	-				
GS402	4	3'-9	52	7	-	-	-		-	
GS601	6	11'-5	8	STR						
GS602	6	27'-3	8	STR						
GS603	6	6'-0	8	2	-	-		-		

NOTES:

1. FOR GENERAL NOTES, SEE SHEETS X AND X.
2. FOR STRIP SEAL JOINT AND SLIDING PLATE DETAILS, SEE SHEET X.
3. "E" IN BAR MARK INDICATES GALVANIZED COATED.
4. DO NOT USE RAIL STEEL (A616) IN BRIDGE ABUTMENTS, FOOTINGS, AND WHERE BENDING OF REINFORCEMENT BARS IS INDICATED.
5. REINFORCING BAR SCHEDULE IS FOR INFORMATION ONLY. VERIFY SCHEDULE PRIOR TO BIDDING AND FABRICATION.
6. NO CORRECTION IN LENGTH FOR BEND CURVATURE IS TO BE MADE.
7. ALL DIMENSIONS ARE OUT TO OUT OF BAR.

NO.	REVISION	DATE	BY

WEST VIRGINIA DEPARTMENT OF TRANSPORTATION
DIVISION OF HIGHWAYS
ENGINEERING DIVISION

I-64 OVER KANAWHA RIVER
EUGENE A. CARTER MEMORIAL BRIDGE +3
PIER R1 (EB)
STRIP SEAL DETAILS

DESIGNED	DATE
DLS	12/12
DRAWN	
SSS	12/12
CHECKED	
REVIEWED	

HDR ENGINEERING INC.
CONSULTING ENGINEERS
CHARLESTON, WV
681-341-6100

SHEET OF

BRIDGE NO. 2563.6

pw://jwhdruseas02.intranet.hdr:HDR_US_East_02/Documents/WV_DOT/WVDOT-Eugene_Carter_Bridge_3/6.0_CAD_BIM/6.2_WIP/HDR/6.2.2_Sheet_Files/23_Structure/4.212 strip seal r1
$DD-MMM-YYYY HH:MM$
SNOLEN

PROJECT NUMBERS		DISTRICT	COUNTY	SHEET NO.	TOTAL
STATE	FEDERAL				
S320-64-57.44 00	NHPP-0064 (497)D	1	KANAWHA		

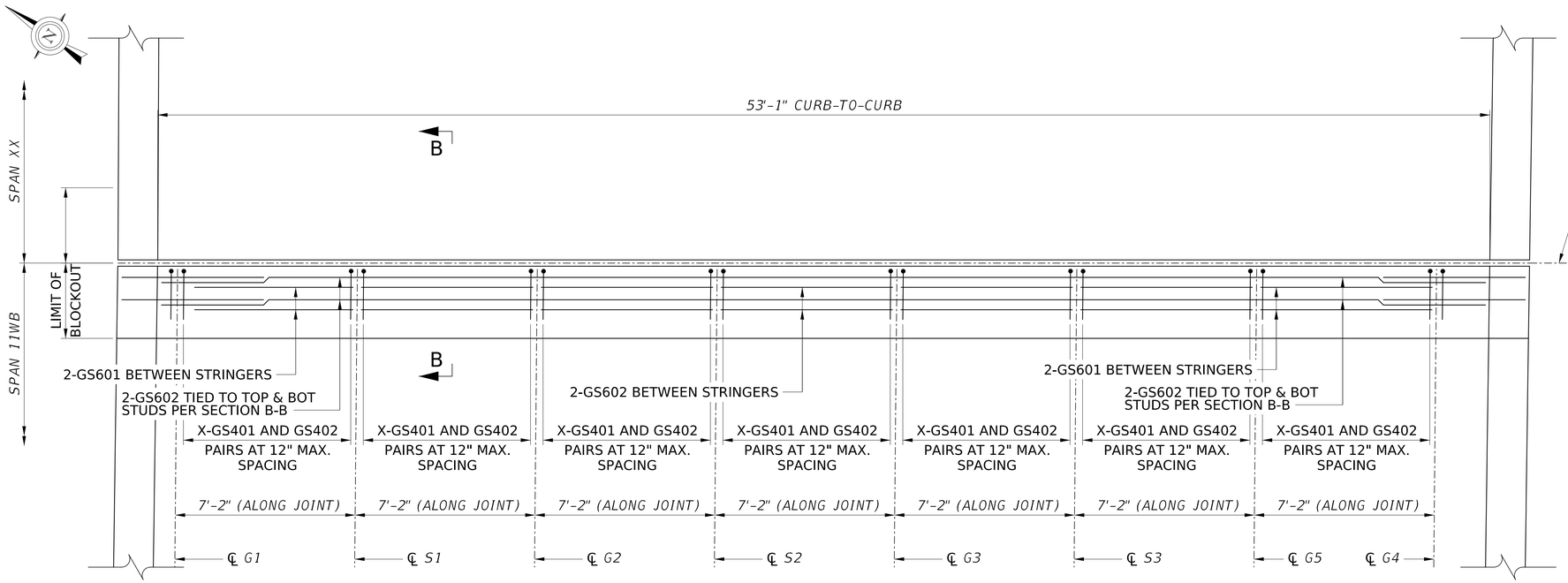

PIER R1 WB STRIP SEAL JOINT PLAN

TYPICAL DECK REINFORCEMENT NOT SHOWN FOR CLARITY, REFER TO DECK PAVING PLANS

NOTE:

REMOVE ALL COMPONENTS OF EXISTING SLIDING PLATE EXPANSION DAM AS NECESSARY FOR INSTALLATION OF NEW STRIP SEAL.

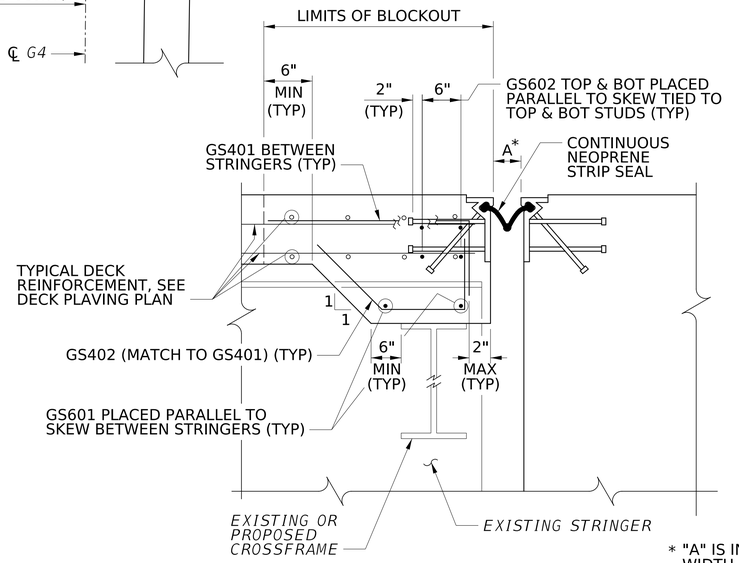

SECTION B-B

NTS

* "A" IS INSTALLATION WIDTH AT 68° F AS PER STRIP SEAL JOINT INFORMATION TABLE

PIER (WB) JOINT DETAIL QUANTITIES

ITEM NO.	DESCRIPTION	UNIT	QUANTITY
602002-001	GALVANIZED COATED REINFORCING STEEL BAR	LB	XX
627011-002	REMOVE AND REPLACE EXPANSION DEVICE, STRIP SEAL	LF	XX†

† LENGTH IS APPROXIMATE TO NEAREST FOOT. SEE STRIP SEAL JOINT INFORMATION TABLE.

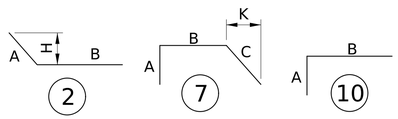

REINFORCEMENT BAR SCHEDULE

MARK	SIZE	LENGTH	NO.	TYPE	A	B	C	H	K	REMARKS
STRIP SEAL JOINT REINFORCEMENT SPAN 11WB										
GS401	4	3'-4	52	10	-	-				
GS402	4	3'-9	52	7	-	-	-		-	
GS601	6	11'-5	8	STR						
GS602	6	27'-3	8	STR						
GS603	6	6'-0	8	2	-	-		-		

NOTES:

1. FOR GENERAL NOTES, SEE SHEETS X AND X.
2. FOR STRIP SEAL JOINT AND SLIDING PLATE DETAILS, SEE SHEET X.
3. "E" IN BAR MARK INDICATES GALVANIZED COATED.
4. DO NOT USE RAIL STEEL (A616) IN BRIDGE ABUTMENTS, FOOTINGS, AND WHERE BENDING OF REINFORCEMENT BARS IS INDICATED.
5. REINFORCING BAR SCHEDULE IS FOR INFORMATION ONLY. VERIFY SCHEDULE PRIOR TO BIDDING AND FABRICATION.
6. NO CORRECTION IN LENGTH FOR BEND CURVATURE IS TO BE MADE.
7. ALL DIMENSIONS ARE OUT TO OUT OF BAR.

NO.	REVISION	DATE	BY

WEST VIRGINIA DEPARTMENT OF TRANSPORTATION
DIVISION OF HIGHWAYS
ENGINEERING DIVISION

I-64 OVER KANAWHA RIVER
EUGENE A. CARTER MEMORIAL BRIDGE +3
PIER R1 (WB)
STRIP SEAL DETAILS

DESIGNED	DATE
DLS	12/12
DRAWN	
SSS	12/12
CHECKED	
REVIEWED	

HDR ENGINEERING INC.
CONSULTING ENGINEERS
CHARLESTON, WV
681-341-6100

SHEET OF

BRIDGE NO. 2563.6

pw://pwhdruseas02.intranet.hdr:HDR_US_East_02/Documents/WV_DOT/WVDOT-Eugene_Carter_Bridge_3/6.0_CAD_BIM/6.2_WIP/HDR/6.2.2_Sheet_Files/23_Structure/4.213 strip seal r1
$DD-MMM-YYYY HH:MM$
$NOLEN

PROJECT NUMBERS		DISTRICT	COUNTY	SHEET NO.	TOTAL
STATE	FEDERAL				
S320-64-57.44 00	NHPP-0064 (497)D	1	KANAWHA		

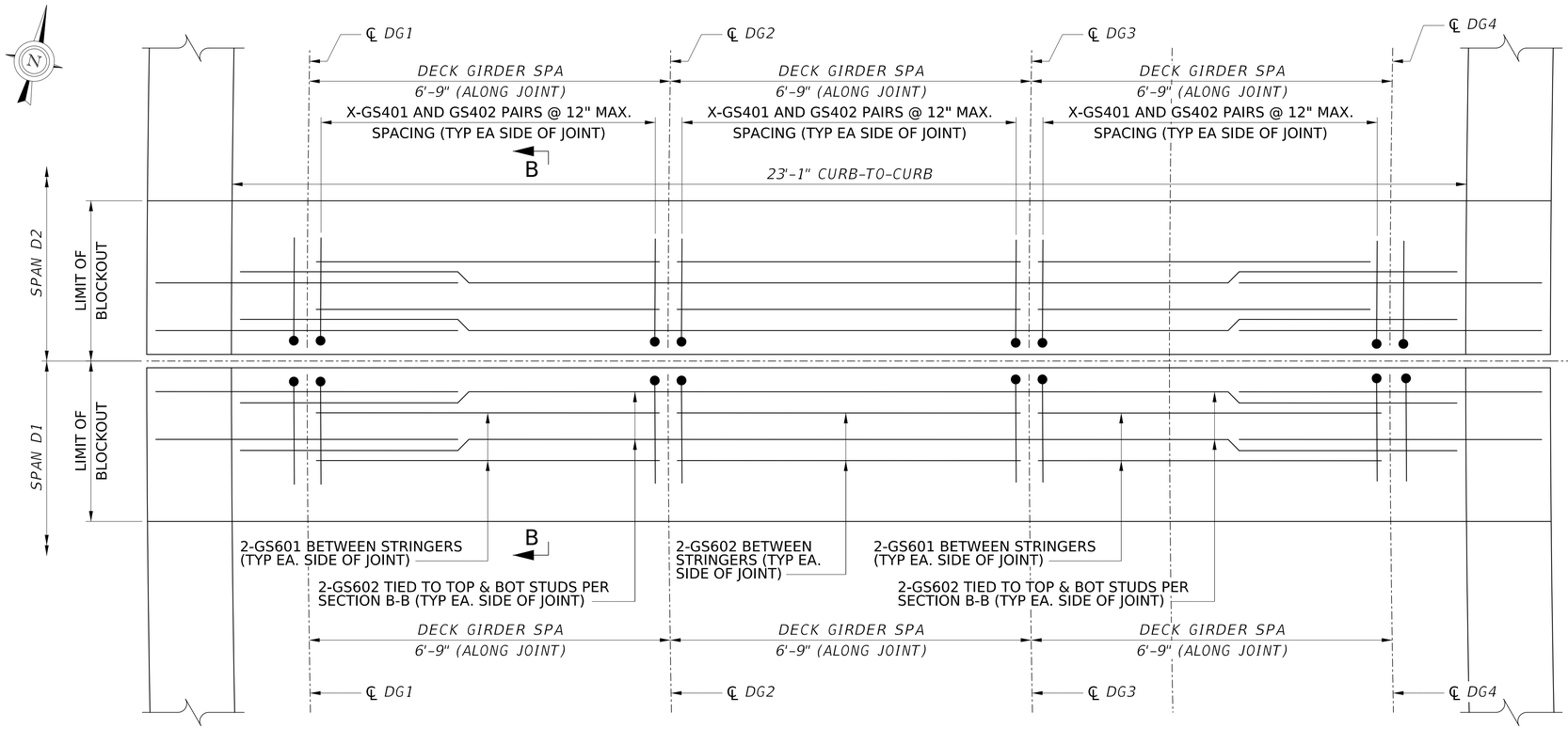

PIER D1 STRIP SEAL JOINT PLAN

TYPICAL DECK REINFORCEMENT NOT SHOWN FOR CLARITY, REFER TO DECK PAVING PLANS

NOTE:

REMOVE ALL COMPONENTS OF EXISTING SLIDING PLATE EXPANSION DAM AS NECESSARY FOR INSTALLATION OF NEW STRIP SEAL.

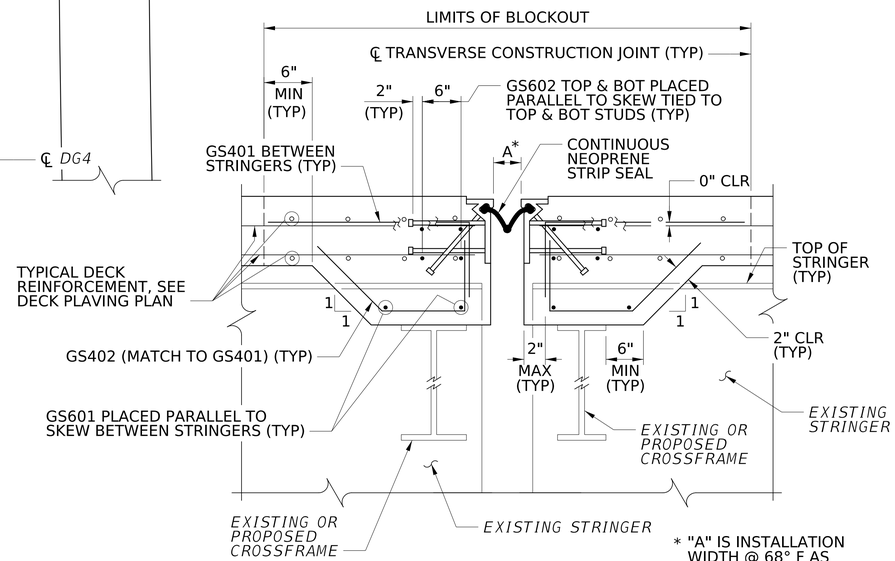

SECTION B-B

NTS

* "A" IS INSTALLATION WIDTH @ 68° F AS PER STRIP SEAL JOINT INFORMATION TABLE

PIER D1 JOINT DETAIL QUANTITIES

ITEM NO.	DESCRIPTION	UNIT	QUANTITY
602002-001	GALVANIZED COATED REINFORCING STEEL BAR	LB	XX
627011-002	REMOVE AND REPLACE EXPANSION DEVICE, STRIP SEAL	LF	XX†

† LENGTH IS APPROXIMATE TO NEAREST FOOT. SEE STRIP SEAL JOINT INFORMATION TABLE.

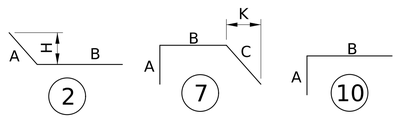

REINFORCEMENT BAR SCHEDULE

MARK	SIZE	LENGTH	NO.	TYPE	A	B	C	H	K	REMARKS
STRIP SEAL JOINT REINFORCEMENT SPAN D3										
GS401	4	3'-4	52	10	-	-				
GS402	4	3'-9	52	7	-	-	-		-	
GS601	6	11'-5	8	STR						
GS602	6	27'-3	8	STR						
GS603	6	6'-0	8	2	-	-		-		
STRIP SEAL JOINT REINFORCEMENT SPAN D1										
GS401	4	3'-4	52	10	-	-				
GS402	4	3'-9	52	7	-	-	-		-	
GS601	6	11'-5	8	STR						
GS602	6	27'-3	8	STR						
GS603	6	6'-0	8	2	-	-		-		

NOTES:

1. FOR GENERAL NOTES, SEE SHEETS X AND X.
2. FOR STRIP SEAL JOINT DETAILS, SEE SHEET X.
3. "G" IN BAR MARK INDICATES GALVANIZED COATED.
4. DO NOT USE RAIL STEEL (A616) IN BRIDGE ABUTMENTS, FOOTINGS, AND WHERE BENDING OF REINFORCEMENT BARS IS INDICATED.
5. REINFORCING BAR SCHEDULE IS FOR INFORMATION ONLY. VERIFY SCHEDULE PRIOR TO BIDDING AND FABRICATION.
6. NO CORRECTION IN LENGTH FOR BEND CURVATURE IS TO BE MADE.
7. ALL DIMENSIONS ARE OUT TO OUT OF BAR.

NO.	REVISION	DATE	BY

WEST VIRGINIA DEPARTMENT OF TRANSPORTATION
DIVISION OF HIGHWAYS
ENGINEERING DIVISION

I-64 OVER KANAWHA RIVER
EUGENE A. CARTER MEMORIAL BRIDGE +3

PIER D1
STRIP SEAL DETAILS

DESIGNED	DATE
DLS	12/12
DRAWN	
SSS	12/12
CHECKED	
REVIEWED	

HDR ENGINEERING INC.
CONSULTING ENGINEERS
CHARLESTON, WV
681-341-6100

SHEET OF

BRIDGE NO. 2563.6

pw://pwhdruseas02.intranet.hdr:HDR_US_East_02/Documents/WV_DOT/WVDOT-Eugene_Carter_Bridge_3/6.0_CAD_BIM/6.2_WIP/HDR/6.2.2_Sheet_Files/23_Structure/4.214 strip seal d1
$DD-MMM-YYYY HH:MM$
SNOLEN

PROJECT NUMBERS		DISTRICT	COUNTY	SHEET NO.	TOTAL
STATE	FEDERAL				
S320-64-57.44 00	NHPP-0064 (497)D	1	KANAWHA		

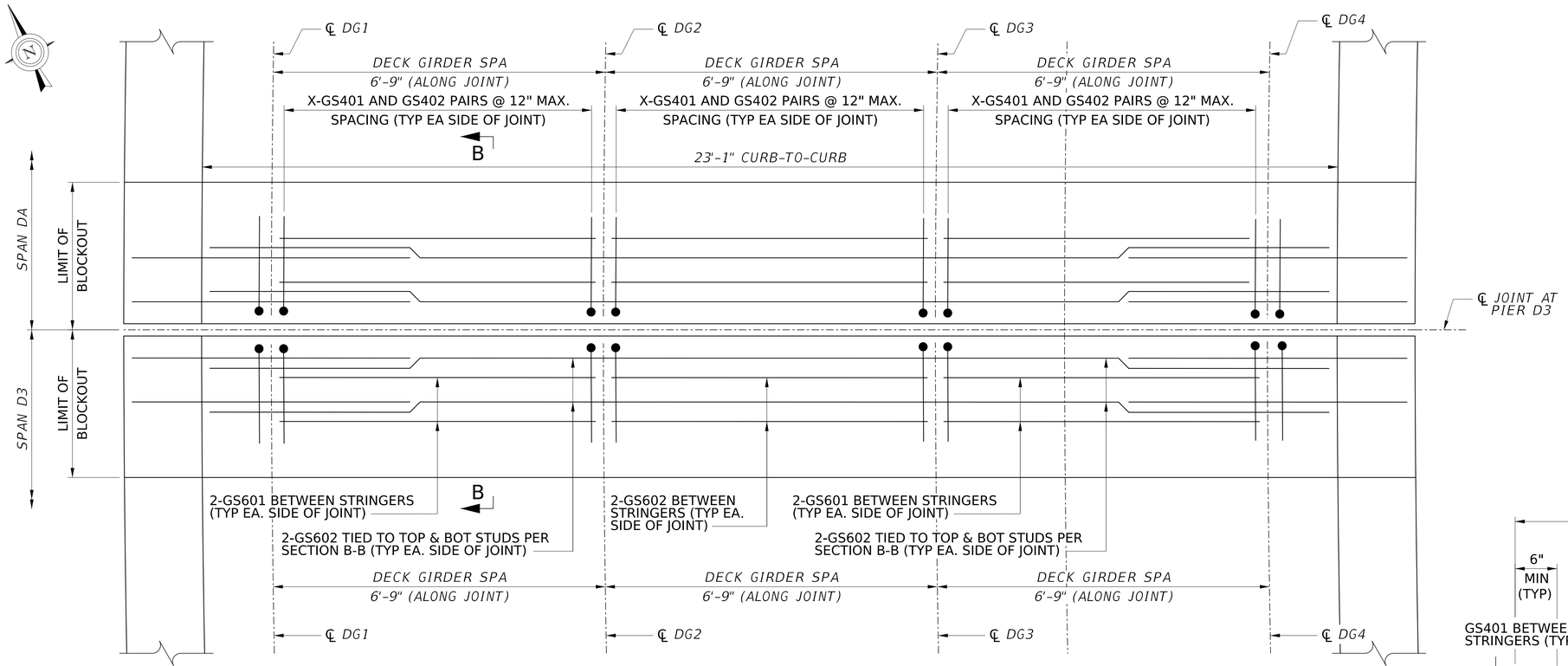

PIER D3 STRIP SEAL JOINT PLAN

TYPICAL DECK REINFORCEMENT NOT SHOWN FOR CLARITY, REFER TO DECK PAVING PLANS

PIER D3 JOINT DETAIL QUANTITIES

ITEM NO.	DESCRIPTION	UNIT	QUANTITY
602002-001	GALVANIZED COATED REINFORCING STEEL BAR	LB	XX
627011-002	REMOVE AND REPLACE EXPANSION DEVICE, STRIP SEAL	LF	XX†

† LENGTH IS APPROXIMATE TO NEAREST FOOT. SEE STRIP SEAL JOINT INFORMATION TABLE.

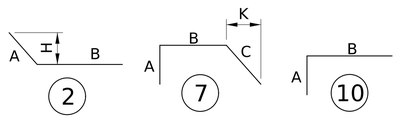

REINFORCEMENT BAR SCHEDULE

MARK	SIZE	LENGTH	NO.	TYPE	A	B	C	H	K	REMARKS
STRIP SEAL JOINT REINFORCEMENT SPAN D3										
GS401	4	3'-4	52	10	-	-				
GS402	4	3'-9	52	7	-	-	-		-	
GS601	6	11'-5	8	STR						
GS602	6	27'-3	8	STR						
GS603	6	6'-0	8	2	-	-		-		
STRIP SEAL JOINT REINFORCEMENT SPAN DA										
GS401	4	3'-4	52	10	-	-				
GS402	4	3'-9	52	7	-	-	-		-	
GS601	6	11'-5	8	STR						
GS602	6	27'-3	8	STR						
GS603	6	6'-0	8	2	-	-		-		

NOTE:

REMOVE ALL COMPONENTS OF EXISTING SLIDING PLATE EXPANSION DAM AS NECESSARY FOR INSTALLATION OF NEW STRIP SEAL.

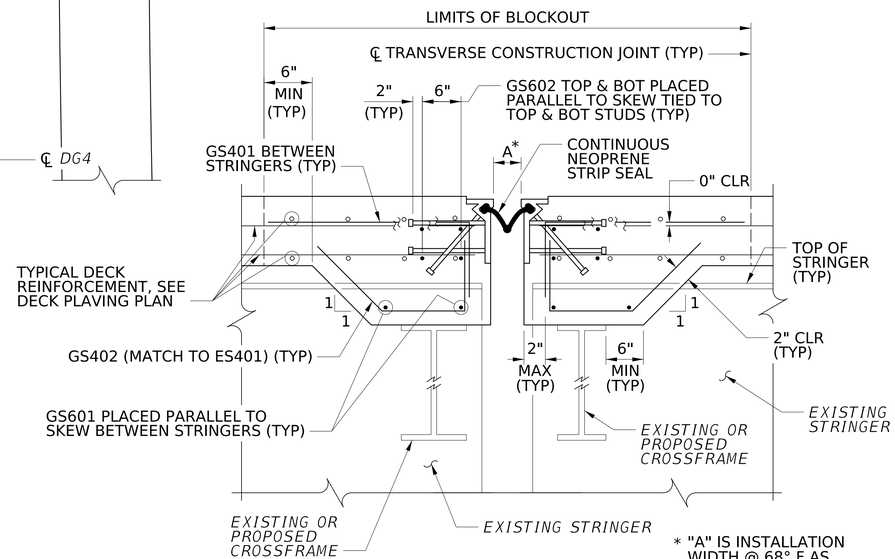

SECTION B-B

NTS

* "A" IS INSTALLATION WIDTH @ 68° F AS PER STRIP SEAL JOINT INFORMATION TABLE

NOTES:

1. FOR GENERAL NOTES, SEE SHEETS X AND X.
2. FOR STRIP SEAL JOINT DETAILS, SEE SHEET X.
3. "G" IN BAR MARK INDICATES GALVANIZED COATED.
4. DO NOT USE RAIL STEEL (A616) IN BRIDGE ABUTMENTS, FOOTINGS, AND WHERE BENDING OF REINFORCEMENT BARS IS INDICATED.
5. REINFORCING BAR SCHEDULE IS FOR INFORMATION ONLY. VERIFY SCHEDULE PRIOR TO BIDDING AND FABRICATION.
6. NO CORRECTION IN LENGTH FOR BEND CURVATURE IS TO BE MADE.
7. ALL DIMENSIONS ARE OUT TO OUT OF BAR.

NO.	REVISION	DATE	BY

WEST VIRGINIA DEPARTMENT OF TRANSPORTATION
DIVISION OF HIGHWAYS
ENGINEERING DIVISION

I-64 OVER KANAWHA RIVER
EUGENE A. CARTER MEMORIAL BRIDGE +3
PIER D3
STRIP SEAL DETAILS

DESIGNED	DATE
DLS	12/12
DRAWN	
SSS	12/12
CHECKED	
REVIEWED	

HDR ENGINEERING INC.
CONSULTING ENGINEERS
CHARLESTON, WV
681-341-6100

SHEET OF

BRIDGE NO. 2563.6

pw://pwhdruseas02.intranet.hdr:HDR_US_East_02/Documents/WV_DOT/WVDOT-Eugene_Carter_Bridge_3/6.0_CAD_BIM/6.2_WIP/HDR/6.2.2_Sheet_Files/23_Structure/4.215 strip seal d3
$DD-MMM-YYYY HH:MM$
SNOLEN

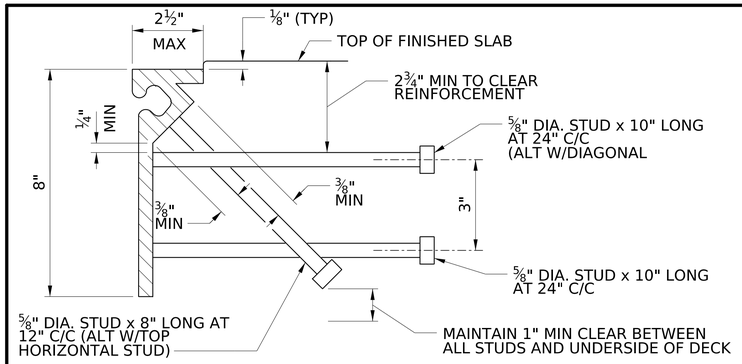

STRIP SEAL JOINT INFORMATION TABLE

LOCATION	CURB-TO-CURB WIDTH ALONG JOINT	JOINT LENGTH (L) (NOTE 1)	MOVEMENT CLASS	INSTALLATION WIDTH(A) AT 68°F
ABUT AW				
ABUT AE				
PIER A3				
PIER A4				
PIER A7				
PIER A8				
PIER C (EB)				
PIER C (WB)				
PIER E (EB)				
PIER E (WB)				
PIER EB				
PIER FB				
PIER R1 (EB)				
PIER R1 (WB)				
PIER D1				
PIER D3				

PROJECT NUMBERS		DISTRICT	COUNTY	SHEET NO.	TOTAL
STATE	FEDERAL				
S320-64-57.44 00	NHPP-0064 (497)D	1	KANAWHA		

STEEL EXTRUSION (RETAINER DETAIL

NTS

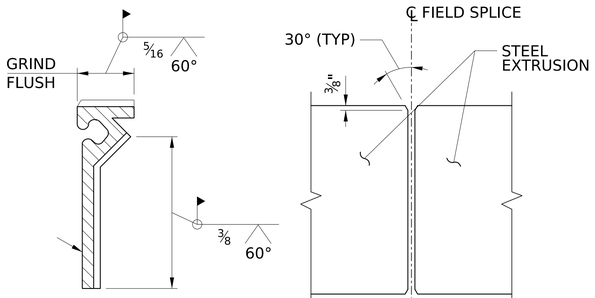

END VIEW

REAR VIEW

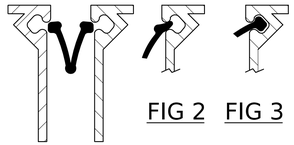

FIG 1

FIG 2

FIG 3

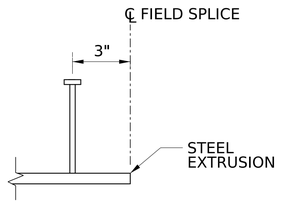

STEEL EXTRUSION FIELD SPLICE DETAIL

NTS

STUD LAYOUT FROM SPLICE

NTS

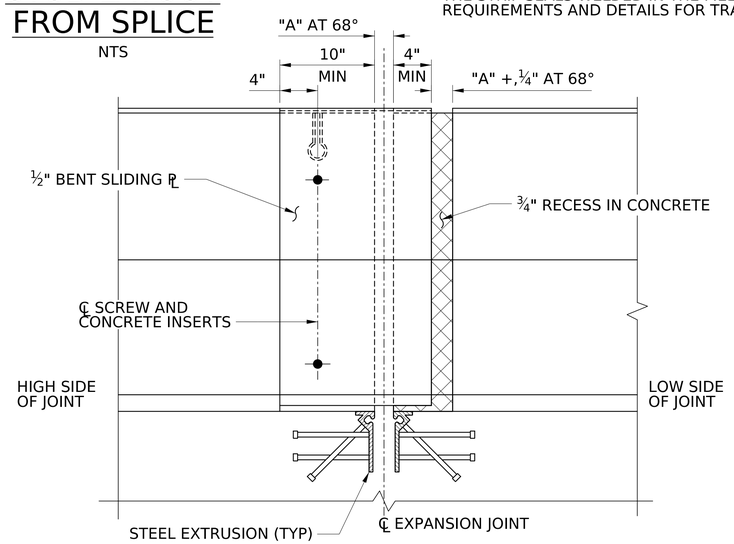

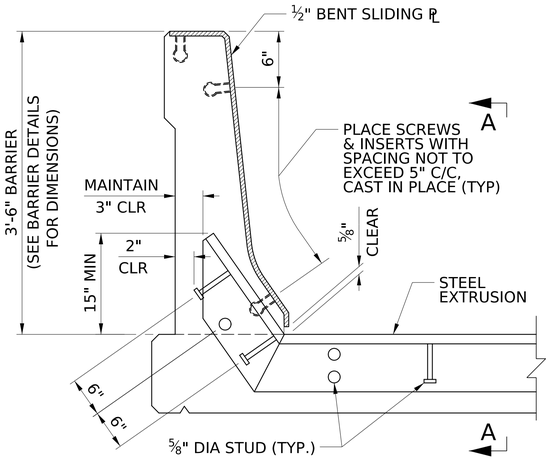

TYPICAL BARRIER SLIDING PLATE DETAIL

(TYPICAL AT STRIP SEAL JOINT)

NTS

VIEW A-A

NTS

JOINT INFORMATION TABLE NOTES:

1. NEOPRENE STRIP SEAL GLAND MUST BE CONTINUOUS ALONG ENTIRE LENGTH OF JOINT. (LENGTH L, SHOWN IS APPROXIMATE AND IS BASED ON CURB-TO-CURB WIDTH (ALONG JOINT) PLUS AN ASSUMED 1'-6" TURN-UP LENGTH INTO EACH BARRIER OR CURB). FINAL LENGTH TO BE DETERMINED BY JOINT MANUFACTURER. FIELD VERIFY ALL DIMENSIONS PRIOR TO FABRICATION.

STRIP SEAL NOTES:

1. GALVANIZE ALL STEEL SURFACES IN ACCORDANCE WITH AASHTO M111.
2. PROVIDE AASHTO M270, GRADE 50 STEEL EXTRUSION MEETING THE REQUIREMENTS OF SECTION 615 OF THE SPECIFICATIONS. UNLESS OTHERWISE SPECIFIED.
3. USE FLATHEAD STAINLESS STEEL ASTM F 738M OR F593 (TYPE 304) FOR COUNTERSUNK SCREWS WITH INSERTS. ALL CONCRETE INSERTS AND M20 COUNTERSUNK MACHINE SCREWS ARE ¾" DIAMETER UNLESS OTHERWISE NOTED.
4. INSTALL CONTINUOUS NEOPRENE STRIP SEAL IN THE FIELD. SPLICING OF SEAL IS NOT PERMITTED. TEMPORARY SEAL MAY BE REQUIRED DEPENDING ON STAGES OF CONSTRUCTION.
5. CONSTRUCT STEEL EXTRUSION TO MATCH ROADWAY GRADE AND CROSS SLOPE.
6. PROVIDE ALL WELDING IN THE SHOP UNLESS REQUIRED FOR STAGED CONSTRUCTION. PROVIDE NON-DESTRUCTIVE TESTING OF WELDS IN ACCORDANCE WITH AASHTO/AWS SPECIFICATIONS. EXPANSION DAMS GREATER THAN 40' IN LENGTH, MAY, AT THE DISCRETION OF THE FABRICATOR, HAVE THE RETAINERS FOR THE STRIP SEALS WELDED IN THE FIELD. REFER TO NOTE 7 FOR SPECIAL REQUIREMENTS AND DETAILS FOR TRANSVERSE BUTT WELDS.

STRIP SEAL NOTES (CONTINUED):

7. A LONGITUDINAL FULL PENETRATION WELD IS REQUIRED TO JOIN THE TOP AND BOTTOM (PLATE) OF THE RETAINER TOGETHER WHEN IT IS FURNISHED IN TWO PIECES; 25% OF THE WELD TO BE TESTED ULTRASONICALLY, AND IF DEFECTS ARE FOUND, 100% OF THE WELD TO BE TESTED. TRANSVERSE BUTT WELDS FOR SPLICING THE RETAINER TO BE PARTIAL PENETRATION DOUBLE V-GROOVE WELDS ON PREPARED BEVELED EDGES, EXTENDING ALL AROUND THE JOINT AS FAR AS PRACTICAL TO ACHIEVE A WATERTIGHT SEAL. FULL PENETRATION GROOVE WELD FOR SPLICING THE RETAINER IN LIEU OF PARTIAL PENETRATION DOUBLE V-GROOVE WELDS MAY BE USED IF SHOWN ON APPROVED SHOP DRAWINGS. DO NOT WELD INSIDE SEAL CAVITY. WHEREVER A TRANSVERSE JOINT OCCURS, TWO ADDITIONAL STUDS MUST BE ADDED ON EACH SIDE OF THE JOINT.
8. MOVEMENT CLASSIFICATION OF SEAL TO BE NOT LESS THAN THE CLASSIFICATION SPECIFIED IN THE STRIP SEAL JOINT INFORMATION TABLE.
9. FABRICATOR TO PROVIDE A CHART SHOWING JOINT OPENING FOR TEMPERATUES BETWEEN -10°F TO 110°F FOR STEEL STRUCTURES, IN 10°F INTERVALS ON SHOP DRAWINGS. SET WIDTH AT 68°F. ALSO FURNISH MOVEMENT OF SEAL ON SKEW AND CERTIFY THAT SEAL IS CORRECT FOR DESIGN.
10. BOND NEOPRENE STRIP SEAL TO EXTRUSION WITH APPROVED ADHESIVE.
11. THE SEALS FURNISHED WITH THE RETAINERS MUST BE COMPATIBLE WITH THE RETAINER AND PROVIDE A WATERTIGHT JOINT.
12. MINIMUM EXTRUSION THICKNESS IS ½". STUD SPACING IS 12" MAX UNLESS NOTED OTHERWISE.
13. MAXIMUM DISTANCE FROM EDGE OF EXTRUSION OR BEND TO FIRST STUD IS 3".
14. BEFORE PLACING BLOCKOUT CONCRETE, APPLY APPROVED EPOXY BONDING AGENT TO ALL CONSTRUCTION JOINTS.
15. GRIND ALL STEEL EDGES EXPOSED TO TRAFFIC OR PEDESTRIANS TO □" MIN.
16. FIELD VERIFY ALL DIMENSIONS.
17. ALL JOINT DIMENSIONS SHOWN ARE FOR A NORMAL TEMPERATURE OF 68°F.
18. THE STRIP SEAL GLANDS SHALL MEET THE MATERIAL REQUIREMENTS OF SECTION 708.2 OF THE SPECIFICATIONS.
19. THE ADHESIVE LUBRICANT USED TO INSTALL THE STRIP SEAL GLAND INTO THE LOCKING STEEL RETAINER SHALL BE A ONE-PART MOISTURE CURING POLYURETHANE COMPOUND, MEETING THE REQUIREMENTS OF ASTM D-4070.

STRIP SEAL INSTALLATION:

1. THE FRAME RAILS SHALL BE CLEANED THOROUGHLY AND SEAL CHANNELS SHALL BE INSPECTED TO ASCERTAIN THE ABSENCE OF CONCRETE AND DEBRIS. THE SEAL CHANNEL SHALL ALSO BE INSPECTED AT ALL FIELD SPLICES, AND ALL WELD SPLATTER AND/OR SHARP EDGES SHALL BE REMOVED.
2. LIBERALLY COAT THE STRIP SEAL LUGS WITH LUBRICANT ADHESIVE. COAT ONLY 3'-0" TO 4'-0" PRECEDING THE INSTALLATION.
3. COLLAPSE THE STRIP SEAL INTO THE JOINT OPENING UNTIL THE LUG IS ALIGNED WITH THE FRAME RAIL CHANNEL. (SEE FIGURE 1)
4. PUSH THE LUG INTO THE CHANNEL AND THEN USE A BENT BAR TO FORCE THE LUG INTO THE CHANNEL (MAKE SURE THAT THE BAR IS DULL TO PREVENT PUNCTURING OF THE SEAL) (SEE FIGURE 2)
5. AFTER THE SEAL LOCKS INTO PLACE, PUSH THE TOP OF THE LUG AGAINST THE FRAME RAIL TO INSURE PROPER SEATING. (SEE FIGURE 3)
6. AS THE WORK PROGRESSES DOWN THE LENGTH OF THE JOINT, WORK BOTH SIDES OF THE STRIP SEAL INTO THE RAIL CHANNEL.

SLIDING PLATE NOTES:

1. FORM CONCRETE RECESS AREA FOR STEEL SLIDING PLATES IN BARRIER AND GRIND TO PROVIDE SMOOTH SURFACE. APPLY ONE COAT OF ASPHALT CEMENT PAINT TO ALLOW BENT SLIDING PLATE TO MOVE FREELY WITHOUT FRICTION.
2. PLACE STEEL SLIDING PLATES WITH INSERTS AND BOLTS IN PLACE TO ENSURE PROPER ALIGNMENT OF INSERTS AND HOLES IN THE STEEL SLIDING PLATE. REMOVE PLATES TO INSTALL SEAL. APPLY BONDBREAKER TO SLIDING PLATES PRIOR TO INSTALLATION.
3. GALVANIZE ALL STEEL COMPONENTS OF THE BARRIER SLIDING PLATE IN ACCORDANCE WITH AASHTO M111.
4. ALL COMPONENTS OF BARRIER SLIDING PLATE, INCLUDING INSTALLATION ARE INCIDENTAL TO ITEM 627011-002.

NO.	REVISION	DATE	BY

WEST VIRGINIA DEPARTMENT OF TRANSPORTATION
DIVISION OF HIGHWAYS
ENGINEERING DIVISION

I-64 OVER KANAWHA RIVER
EUGENE A. CARTER MEMORIAL BRIDGE +3

STRIP SEALS GENERAL DETAILS

DESIGNED	DATE
DLS	12/25
DRAWN	
SSS	12/25
CHECKED	
REVIEWED	

HDR ENGINEERING INC.
CONSULTING ENGINEERS
CHARLESTON, WV
681-341-6100

SHEET OF
BRIDGE NO. 2563.6

$DD-MMM-YYYY HH:MM$
SNOLEN
pw://pwhdruseas02.intranet.hdr:HDR_US_East_02/Documents/WV_DOT/WVDOT-Eugene_Carter_Bridge_3/6.0_CAD_BIM/6.2_WIP/HDR/6.2.2_Sheet_Files/23_Structure/4.216 strip seal details

PROJECT NUMBERS		DISTRICT	COUNTY	SHEET NO.	TOTAL
STATE	FEDERAL				
S320-64-57.44 00	NHPP-0064 (497)D	1	KANAWHA		

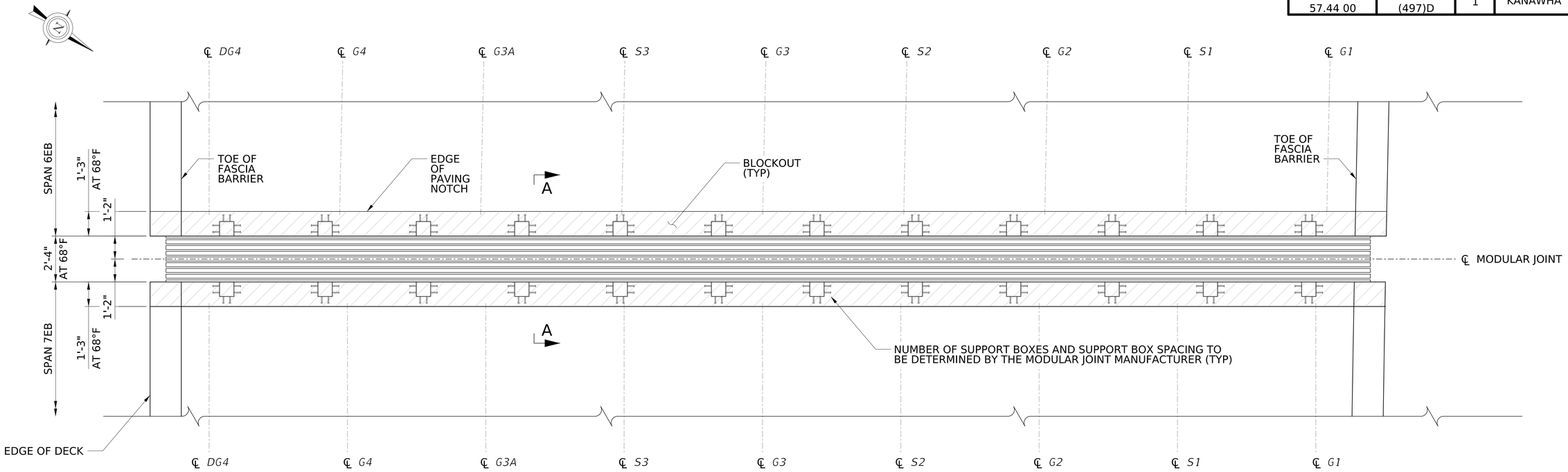

PARTIAL PLAN AT PIER B

(EB LANES SHOWN, WB SIMILAR)

1 0 1 2 3 ft.

⅜" = 1'-0"

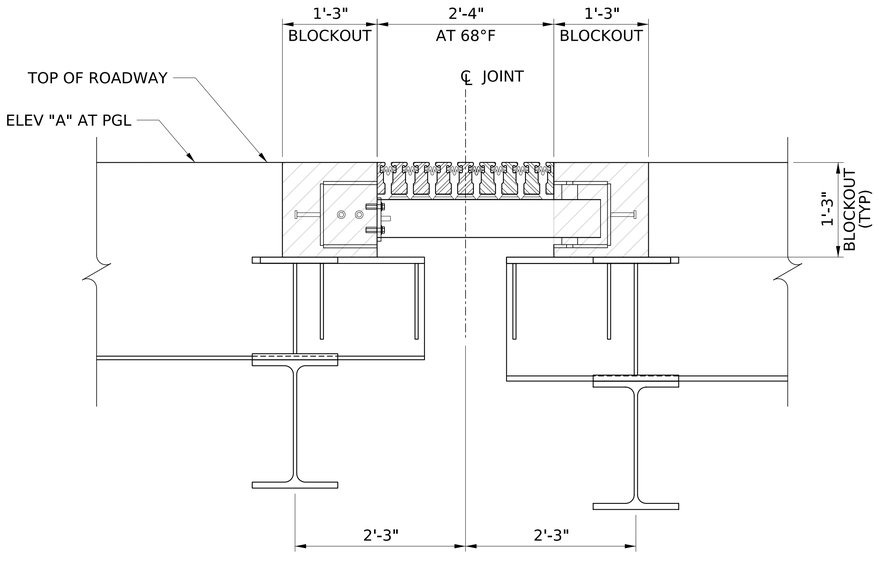

SECTION A-A

(ABUT 1 SHOWN, ABUT 2 OPP HAND)

6 0 6 12 in.

1" = 1'-0"

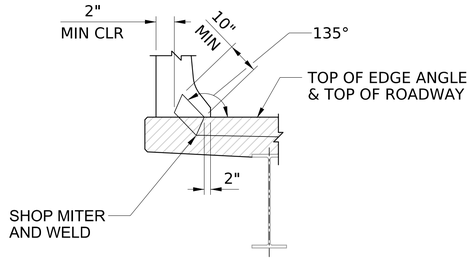

DETAIL 1

(FASCIA BARRIER SHOWN MEDIAN BARRIER SIMILAR)

NOTES:

1. FOR GENERAL NOTES, SEE SHEETS $GN01$ TO $GN05$
2. FOR MODULAR EXPANSION DAM NOTES, SEE SHEET $MDDT01$
3. FOR ABUTMENT BLOCKOUT DETAILS, SEE SHEETS $ABTD7$ AND $ABTD8$. FOR DECK BLOCKOUT DETAILS, SEE SHEET $DKDT03$
4. FOR DECK ELEVATIONS, SEE SHEETS $DKEL01$ TO $DKEL03$.
5. WIND STOPS SHALL BE INSTALLED PRIOR TO INSTALLATION OF THE MODULAR DAM, FOR DETAILS, SEE SHEET $ABDD01$.
6. MOVEMENTS ARE IN ACCORDANCE WITH AASHTO LOAD COMBINATIONS.

LONGITUDINAL DESIGN MOVEMENTS (IN) AT ABUTMENTS				
	SERVICE		STRENGTH	
	EXPANSION	CONTRACTION	EXPANSION	CONTRACTION
PIER B	X	X	X	X

PGL ELEVATIONS AT EDGES OF BLOCKOUT				
	STA "A"	ELEV "A"	STA "B"	ELEV "B"
PIER B	X	X	X	X

OPENING ADJUSTMENT PER 10 °F INCREASE (IN):

PIER B X

NO.	REVISION	DATE	BY

WEST VIRGINIA DEPARTMENT OF TRANSPORTATION
DIVISION OF HIGHWAYS
ENGINEERING DIVISION

I-64 OVER KANAWHA RIVER
EUGENE A. CARTER MEMORIAL BRIDGE +3
PIER B (EB)
MODULAR JOINT (1 OF 2)

DESIGNED	DATE
DLS	12/12
DRAWN	
SSS	12/12
CHECKED	
REVIEWED	

HDR ENGINEERING INC.
CONSULTING ENGINEERS
CHARLESTON, WV
681-341-6100

SHEET OF

BRIDGE NO. 2563.6

SNOLEN $DD-MMM-YYYY HH:MM$ pw://pwhdruseas02.intranet.hdr:HDR_US_East_02/Documents/WV_DOT/WVDOT-Eugene_Carter_Bridge_3/6.0_CAD_BIM/6.2_WIP/HDR/6.2.2_Sheet_Files/23_Structure/4.218 mod joint pier b EB

PROJECT NUMBERS		DISTRICT	COUNTY	SHEET NO.	TOTAL
STATE	FEDERAL				
S320-64-57.44 00	NHPP-0064 (497)D	1	KANAWHA		

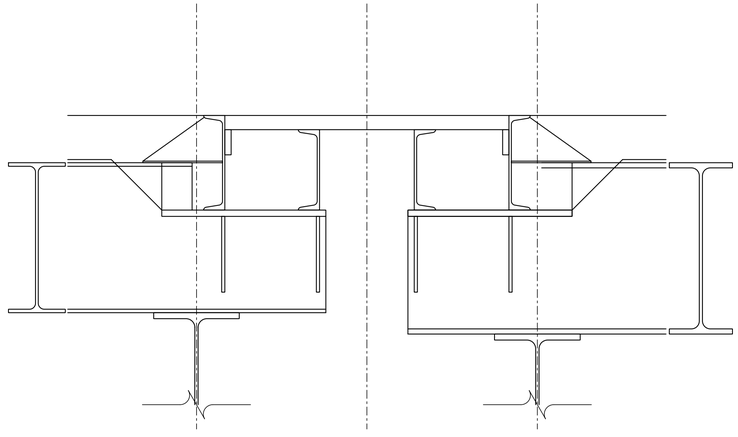

SECTION AT EXISTING EXPANSION DAM AT PIER B

(SHOWING REMOVALS)

NO.	REVISION	DATE	BY

WEST VIRGINIA DEPARTMENT OF TRANSPORTATION
DIVISION OF HIGHWAYS
ENGINEERING DIVISION

I-64 OVER KANAWHA RIVER
EUGENE A. CARTER MEMORIAL BRIDGE +3
PIER B (EB)
MODULAR JOINT (2 OF 2)

DESIGNED	DATE
DRAWN	
CHECKED	
REVIEWED	

HDR ENGINEERING INC.
CONSULTING ENGINEERS
CHARLESTON, WV
681-341-6100

SHEET OF

BRIDGE NO. 2563.6

SNOLEN $DD-MMM-YYYY HH:MM$ pw://pwhdruseas02.intranet.hdr:HDR_US_East_02/Documents/WV_DOT/WVDOT-Eugene_Carter_Bridge_3/6.0_CAD_BIM/6.2_WIP/HDR/6.2.2_Sheet_Files/23_Structure/4.219 mod joint pier b EB

PROJECT NUMBERS		DISTRICT	COUNTY	SHEET NO.	TOTAL
STATE	FEDERAL				
S320-64-57.44 00	NHPP-0064 (497)D	1	KANAWHA		

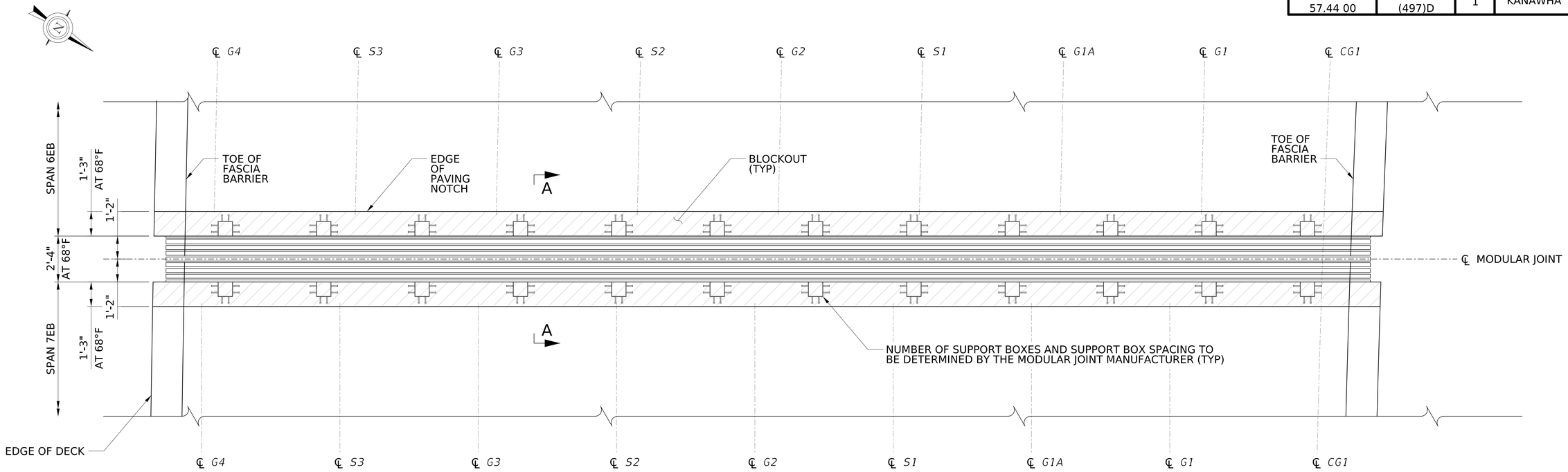

PARTIAL PLAN AT PIER B

(WB LANES SHOWN, EB SIMILAR)

1 0 1 2 3 ft.

⅜" = 1'-0"

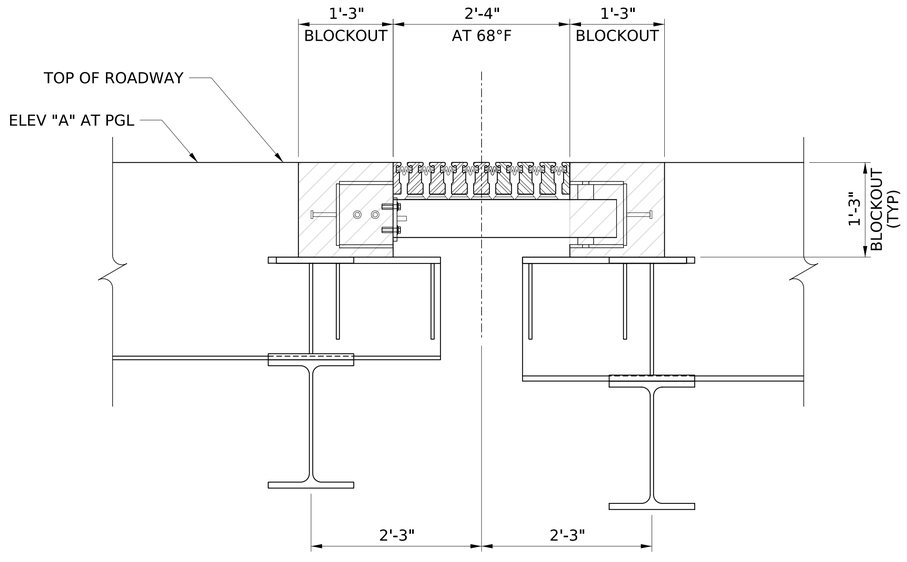

SECTION A-A

6 0 6 12 in.

1" = 1'-0"

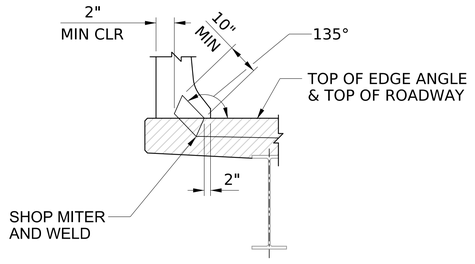

DETAIL 1

(FASCIA BARRIER SHOWN
MEDIAN BARRIER SIMILAR)

LONGITUDINAL DESIGN MOVEMENTS (IN) AT ABUTMENTS				
	SERVICE		STRENGTH	
	EXPANSION	CONTRACTION	EXPANSION	CONTRACTION
PIER B	X	X	X	X

PGL ELEVATIONS AT EDGES OF BLOCKOUT				
	STA "A"	ELEV "A"	STA "B"	ELEV "B"
PIER B	X	X	X	X

OPENING ADJUSTMENT PER 10 °F INCREASE (IN):

PIER B X

NOTES:

1. FOR GENERAL NOTES, SEE SHEETS $GN01$ THRU $GN05$
2. FOR MODULAR EXPANSION DAM NOTES, SEE SHEET $MDDT01$
3. FOR ABUTMENT BLOCKOUT DETAILS, SEE SHEETS $ABDT01$ AND $ABDT02$. FOR DECK BLOCKOUT DETAILS, SEE SHEET $DKDT03$
4. FOR DECK ELEVATIONS, SEE SHEETS $DKEL01$ THRU $DKEL03$.
5. WIND STOPS SHALL BE INSTALLED PRIOR TO INSTALLATION OF THE MODULAR DAM, FOR DETAILS, SEE SHEET $ABDT01$
6. MOVEMENTS ARE IN ACCORDANCE WITH AASHTO LOAD COMBINATIONS.

NO.	REVISION	DATE	BY

WEST VIRGINIA DEPARTMENT OF TRANSPORTATION
DIVISION OF HIGHWAYS
ENGINEERING DIVISION

I-64 OVER KANAWHA RIVER
EUGENE A. CARTER MEMORIAL BRIDGE +3
PIER B (WB)
MODULAR JOINT (1 OF 2)

DESIGNED	DLS
DATE	12/12
DRAWN	SSS
DATE	12/12
CHECKED	
DATE	
REVIEWED	
DATE	

HDR ENGINEERING INC.
CONSULTING ENGINEERS
CHARLESTON, WV
681-341-6100

SHEET
OF
BRIDGE NO.
2563.6

SNOLEN $DD-MMM-YYYY HH:MM$ pw://pwhdruseas02.Intranet.hdr:HDR_US_East_02/Documents/WV_DOT/WVDOT-Eugene_Carter_Bridge_3/6.0_CAD_BIM/6.2_WIP/HDR/6.2.2_Sheet_Files/23_Structure/4.220 mod joint pier b WB

PROJECT NUMBERS		DISTRICT	COUNTY	SHEET NO.	TOTAL
STATE	FEDERAL				
S320-64-57.44 00	NHPP-0064 (497)D	1	KANAWHA		

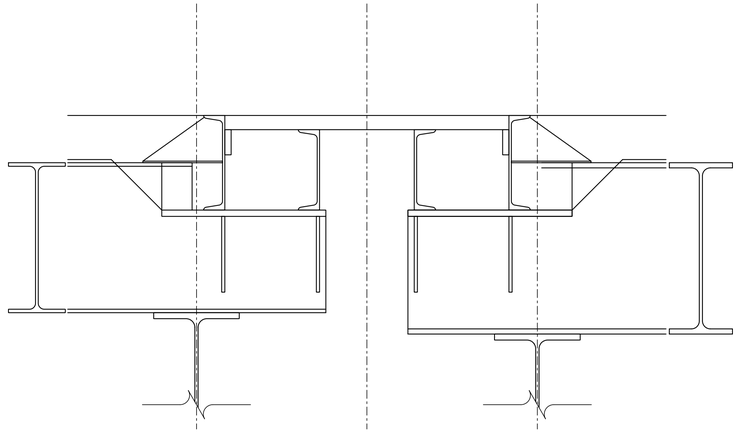

SECTION AT EXISTING EXPANSION DAM AT PIER B

(SHOWING REMOVALS)

NO.	REVISION	DATE	BY

WEST VIRGINIA DEPARTMENT OF TRANSPORTATION
DIVISION OF HIGHWAYS
ENGINEERING DIVISION

I-64 OVER KANAWHA RIVER
EUGENE A. CARTER MEMORIAL BRIDGE +3
PIER B (WB)
MODULAR JOINT (2 OF 2)

DESIGNED	DATE
DRAWN	
CHECKED	
REVIEWED	

HDR ENGINEERING INC.
CONSULTING ENGINEERS
CHARLESTON, WV
681-341-6100

SHEET OF

BRIDGE NO. 2563.6

SNOLEN $DD-MMM-YYYY HH:MM$ pw://pwhdruseas02.intranet.hdr:HDR_US_East_02/Documents/WV_DOT/WVDOT-Eugene_Carter_Bridge_3/6.0_CAD_BIM/6.2_WIP/HDR/6.2.2_Sheet_Files/23_Structure/4.221 mod joint pier b WB

PROJECT NUMBERS		DISTRICT	COUNTY	SHEET NO.	TOTAL
STATE	FEDERAL				
S320-64-57.44 00	NHPP-0064 (497)D	1	KANAWHA		

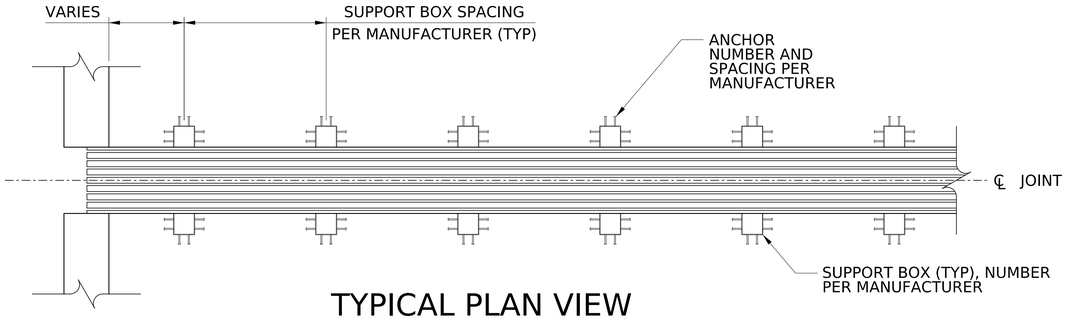

TYPICAL PLAN VIEW

1 0 1 2 3 ft.

⅜" = 1'-0"

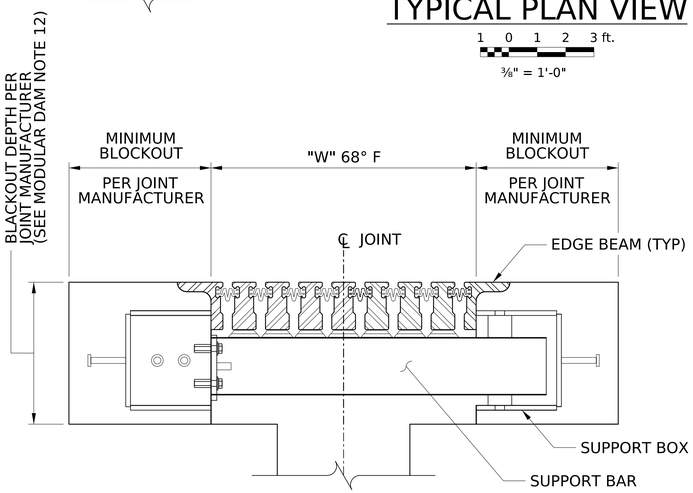

SECTION "B" - TYPICAL SECTION THOUGH EXPANSION JOINT AT SUPPORT BOX

TYPICAL JOINT SYSTEM SHOWN ACTUAL DETAILS PER JOINT MANUFACTURER

1 0 1 2 3 ft.

⅜" = 1'-0"

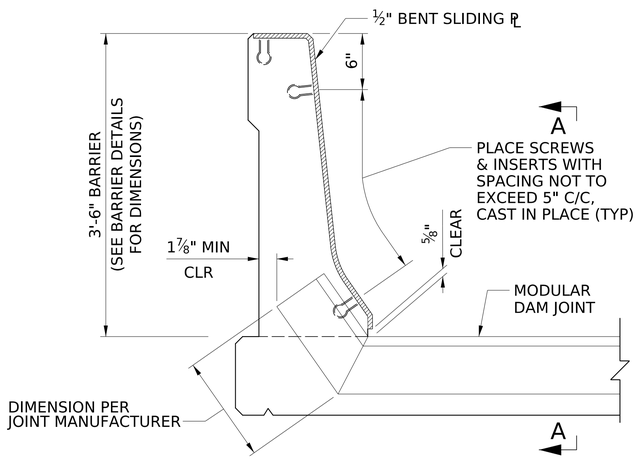

TYPICAL BARRIER SLIDING PLATE DETAIL

(TYPICAL AT MODULAR DAM JOINT)

NTS

MODULAR DAM DESIGN MOVEMENT				
LOCATION	LONGITUDINAL DESIGN MOVEMENTS		LATERAL MOVEMENT DUE TO SKEW	
	EXPANSION	CONTRACTION	EXPANSION	CONTRACTION
PIER B	X	X	X	X

MODULAR DAM JOINT INFORMATION TABLE					
LOCATION	CURB-TO-CURB WIDTH ALONG JOINT	JOINT LENGTH (L) (NOTE 1)	GAP (W) AT -30°F	GAP (W) AT 68°F	GAP (W) AT 120°F
PIER B	X	X	X	X	X

MODULAR DAM JOINT INFORMATION TABLE NOTES:

1. LENGTH L, SHOWN IS APPROXIMATE AND IS BASED ON CURB-TO-CURB WIDTH (ALONG JOINT) PLUS AN ASSUMED 1'-6" TURN-UP LENGTH INTO EACH BARRIER OR CURB). FINAL LENGTH TO BE DETERMINED BY JOINT MANUFACTURER. FIELD VERIFY ALL DIMENSIONS PRIOR TO FABRICATION.
2. GAP (W) SHOWN IS BASED ON AN ASSUMED CENTER BEAM WIDTH OF 2.5" AND A COMBINED MINIMUM OPENING OF APPROX. 1" BETWEEN JOINT COMPONENTS AT 120°F (MINIMUM "W" OF APPROX. 3.5" AT 120°F). "W" IS MEASURED PERPENDICULAR TO ℄ JOINT.

MODULAR DAM DESIGN MOVEMENT NOTES:

1. DESIGN MOVEMENTS IN ACCORDANCE WITH AASHTO STRENGTH LOAD COMBINATIONS. EXPANSION MOVEMENTS ARE 68°F TO 120°F. CONTRACTION MOVEMENTS ARE 68°F TO -30°F. LONGITUDINAL MOVEMENTS ARE PERPENDICULAR TO ℄ JOINT. LATERAL MOVEMENTS ARE PARALLEL TO ℄ JOINT.

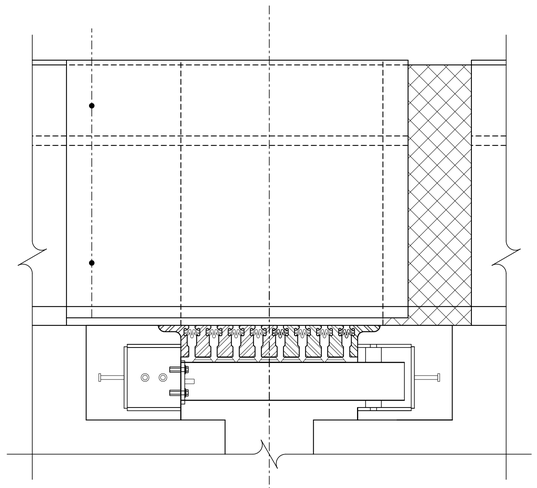

VIEW A-A

6 0 6 12 in.

1" = 1'-0"

MODULAR DAM NOTES:

1. GALVANIZE ALL STEEL SURFACES IN ACCORDANCE WITH AASHTO M111.
2. PROVIDE AASHTO M270, GRADE 50 STEEL MEETING THE REQUIREMENTS OF SECTION 615 OF THE SPECIFICATIONS. UNLESS OTHERWISE SPECIFIED.
3. CONSTRUCT MODULAR JOINT TO MATCH ROADWAY GRADE AND CROSS SLOPE.
4. PROVIDE ALL WELDING IN THE SHOP UNLESS REQUIRED FOR STAGED CONSTRUCTION.
5. THE MODULAR JOINT ASSEMBLY SHALL BE FACTORY ASSEMBLED AND ADJUSTABLE FOR AMBIENT TEMPERATURE. MODULAR JOINT SYSTEM MUST BE APPROPRIATE FOR LONGITUDINAL AND LATERAL MOVEMENTS SHOWN.
6. FABRICATOR TO PROVIDE A CHART SHOWING GAP WIDTH "W" FOR TEMPERATURES BETWEEN -10°F TO 110°F FOR STEEL STRUCTURES, IN 10°F INTERVALS ON SHOP DRAWINGS. SET WIDTH AT 68°F CERTIFY THAT JOINT IS CORRECT FOR DESIGN.
7. THE SEALS FURNISHED WITH THE MODULAR JOINT SYSTEM MUST BE COMPATIBLE WITH THE SYSTEM, BE SHOP INSTALLED IN ONE CONTINUOUS PIECE AND PROVIDE A WATERTIGHT JOINT.
8. BEFORE PLACING BLOCKOUT CONCRETE, APPLY APPROVED EPOXY BONDING AGENT TO ALL CONSTRUCTION JOINTS.
9. GRIND ALL STEEL EDGES EXPOSED TO TRAFFIC OR PEDESTRIANS TO □" MIN.
10. FIELD VERIFY ALL DIMENSIONS.
11. ALL DIMENSIONS SHOWN ARE FOR A NORMAL TEMPERATURE OF 68°F.
12. AVAILABLE BLOCKOUT DEPTH FOR JOINT REHABILITATION IS LIMITED BY EXISTING COMPONENTS OF STEEL SUPERSTRUCTURE INCLUDING THE TOP FLANGE OF EXISTING STRINGERS AND GIRDERS RUNNING PERPENDICULAR TO { JOINT, AND EXISTING DIAPHRAGMS AND FLOORBEAMS RUNNING PARALLEL TO THE JOINT. CONTRACTOR SHALL PROVIDE A MODULAR JOINT SYSTEM COMPATIBLE WITH THE SPACE AVAILABLE, AND MEETING ALL MOVEMENT REQUIREMENTS. REFER TO INDIVIDUAL JOINT SHEETS AND EXISTING PLANS FOR ADDITIONAL INFORMATION. IF MODIFICATIONS TO THE EXISTING STEEL FRAMING ARE REQUIRED TO FACILITATE THE INSTALLATION OF ANY JOINT, THE MODIFICATION SHALL BE INCLUDED IN SHOP DRAWINGS AND SHALL BE INCIDENTAL TO ITEM 627011-002.
13. CONTRACTOR SHALL COORDINATE REBAR DETAILS AT MODULAR JOINTS TO AVOID INTERFERENCE WITH JOINT COMPONENTS OF SELECTED JOINT SYSTEM. REFER TO DECK PAVING PLAN SHEETS AND INDIVIDUAL JOINT SHEETS. ANY MODIFICATIONS TO THE REINFORCEMENT SHALL BE SUBMITTED WITH SHOP DRAWINGS AND SHALL BE INCIDENTAL TO ITEM 627011-002.

SLIDING PLATE NOTES:

1. FORM CONCRETE RECESS AREA FOR STEEL SLIDING PLATES IN BARRIER AND GRIND TO PROVIDE SMOOTH SURFACE. APPLY ONE COAT OF ASPHALT CEMENT PAINT TO ALLOW BENT SLIDING PLATE TO MOVE FREELY WITHOUT FRICTION.
2. PLACE STEEL SLIDING PLATES WITH INSERTS AND BOLTS IN PLACE TO ENSURE PROPER ALIGNMENT OF INSERTS AND HOLES IN THE STEEL SLIDING PLATE. REMOVE PLATES TO INSTALL SEAL. APPLY BONDBREAKER TO SLIDING PLATES PRIOR TO INSTALLATION.
3. GALVANIZE ALL STEEL COMPONENTS OF THE BARRIER SLIDING PLATE IN ACCORDANCE WITH AASHTO M111.
4. ALL COMPONENTS OF BARRIER SLIDING PLATE, INCLUDING INSTALLATION ARE INCIDENTAL TO ITEM 627011-002.

NO.	REVISION	DATE	BY

WEST VIRGINIA DEPARTMENT OF TRANSPORTATION
DIVISION OF HIGHWAYS
ENGINEERING DIVISION

I-64 OVER KANAWHA RIVER
EUGENE A. CARTER MEMORIAL BRIDGE +3
PIER B
MODULAR JOINT DETAILS

DESIGNED	DLS	12/12
DRAWN	SSS	12/12
CHECKED		
REVIEWED		

HDR ENGINEERING INC.
CONSULTING ENGINEERS
CHARLESTON, WV
681-341-6100

SHEET OF
BRIDGE NO. 2563.6

pw://pwhdruseas02.intranet.hdr:HDR_US_East_02/Documents/WV_DOT/WVDOT-Eugene_Carter_Bridge_3/6.0_CAD_BIM/6.2_WIP/HDR/6.2.2_Sheet_Files/23_Structure/4.222 mod joint details
$DD-MMM-YYYY HH:MM$
SNOLEN

PROJECT NUMBERS		DISTRICT	COUNTY	SHEET NO.	TOTAL
STATE	FEDERAL				
S320-64-57.44 00	NHPP-0064 (497)D	1	KANAWHA		

THE FOLLOWING ADDITIONAL SHEETS ARE TO BE DEVELOPED ALONG WITH THE APPROXIMATE NUMBER OF SHEETS:

DECK DRAINAGE DETAILS - MAINLINE - 8 SHEETS
DECK DRAINAGE DETAILS - RAMP D - 2 SHEETS
DECK DRAINAGE DETAILS - RAMP E - 2 SHEETS - M&H
DECK DRAINAGE DETAILS - RAMP F - 2 SHEETS - M&H
DECK DRAINAGE GENERAL DETAILS (PIPE SUPPORTS AND SCUPPER DETAILS) - 2 SHEETS

NO.	REVISION	DATE	BY

WEST VIRGINIA DEPARTMENT OF TRANSPORTATION
DIVISION OF HIGHWAYS
ENGINEERING DIVISION

I-64 OVER KANAWHA RIVER
EUGENE A. CARTER MEMORIAL BRIDGE +3

ADDITIONAL SHEETS TO BE DEVELOPED

DESIGNED	DATE
DRAWN	
CHECKED	
REVIEWED	

HDR ENGINEERING INC.
CONSULTING ENGINEERS
CHARLESTON, WV
681-341-6100

SHEET OF

BRIDGE NO. 2563.6

SNOLEN $DD-MMM-YYYY HH:MM$ pw://pwhdruseas02.intranet.hdr:HDR_US_East_02/Documents/WV_DOT/WVDOT-Eugene_Carter_Bridge_3/6.0_CAD_BIM/6.2_WIP/HDR/6.2.2_Sheet_Files/23_Structure/Reference/str_ref_bdr_Eugene Carter Memorial.dgn

PROJECT NUMBERS		DISTRICT	COUNTY	SHEET NO.	TOTAL
STATE	FEDERAL				
S320-64-57.44 00	NHPP-0064 (497)D	1	KANAWHA		

THE FOLLOWING ADDITIONAL SHEETS ARE TO BE DEVELOPED ALONG WITH THE APPROXIMATE NUMBER OF SHEETS:

APPROACH SLAB DETAILS ABUT AW - 2 SHEETS
APPROACH SLAB DETAILS ABUT AE - 2 SHEETS
APPROACH SLAB DETAILS ABUT C - 2 SHEETS
APPROACH SLAB DETAILS ABUT D - 2 SHEETS

NO.	REVISION	DATE	BY

WEST VIRGINIA DEPARTMENT OF TRANSPORTATION
DIVISION OF HIGHWAYS
ENGINEERING DIVISION

I-64 OVER KANAWHA RIVER
EUGENE A. CARTER MEMORIAL BRIDGE +3

ADDITIONAL SHEETS TO BE DEVELOPED

DESIGNED	DATE
DRAWN	
CHECKED	
REVIEWED	

HDR ENGINEERING INC.
CONSULTING ENGINEERS
CHARLESTON, WV
681-341-6100

SHEET OF
BRIDGE NO. 2563.6

SNOLEN $DD-MMM-YYYY HH:MM$ pw://pwhdruseas02.intranet.hdr:HDR_US_East_02/Documents/WV_DOT/WVDOT-Eugene_Carter_Bridge_3/6.0_CAD_BIM/6.2_WIP/HDR/6.2.2_Sheet_Files/23_Structure/Reference/str_ref_bdr_Eugene Carter Memorial.dgn

PROJECT NUMBERS		DISTRICT	COUNTY	SHEET NO.	TOTAL
STATE	FEDERAL				
S320-64-57.44 00	NHPP-0064 (497)D	1	KANAWHA		

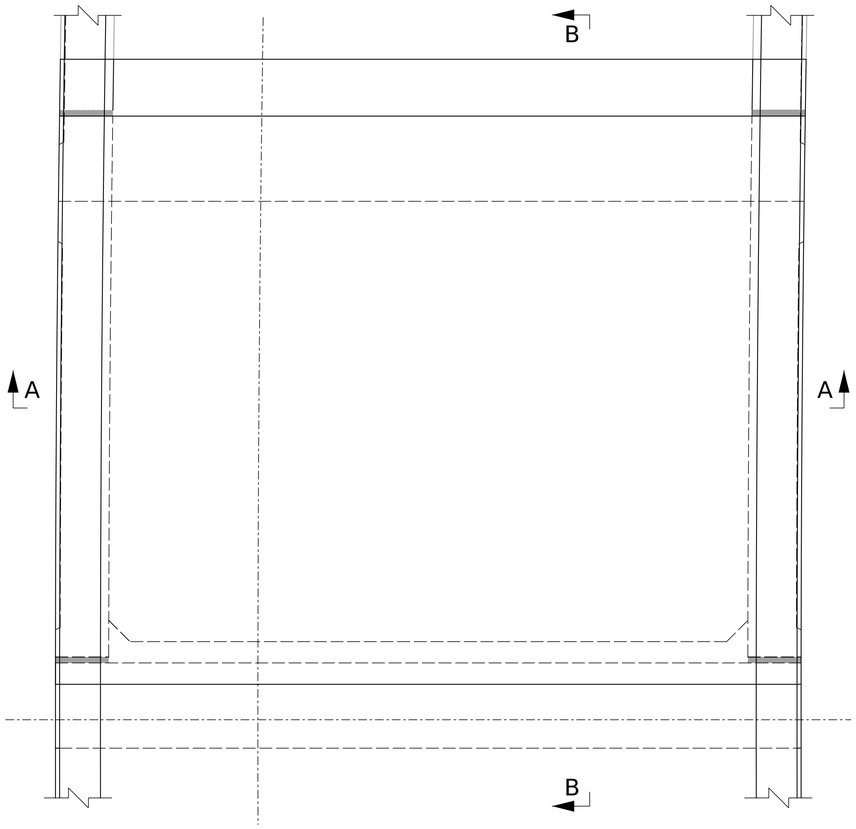

APPROACH SLAB PLAN

1 0 1 2 3 ft.

⅜" = 1'-0"

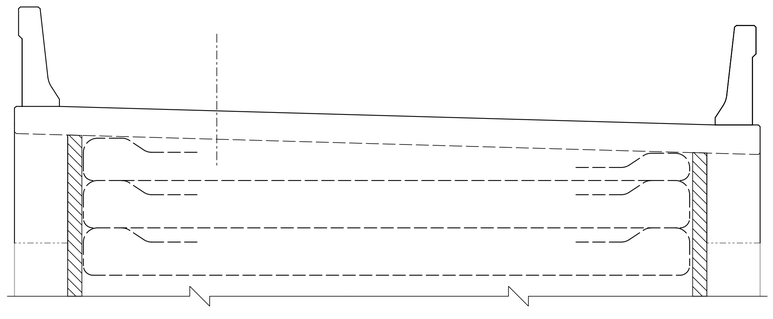

SECTION A-A

1 0 1 2 3 ft.

⅜" = 1'-0"

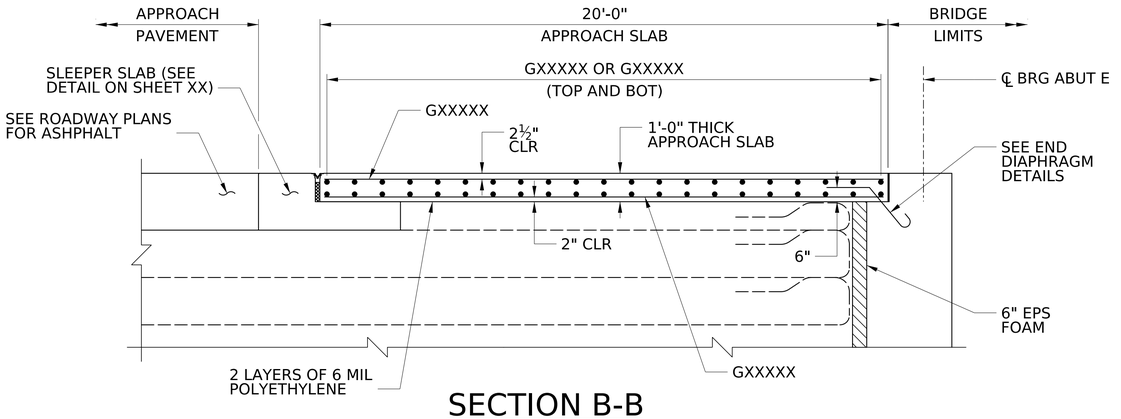

SECTION B-B

1 0 1 2 3 ft.

⅜" = 1'-0"

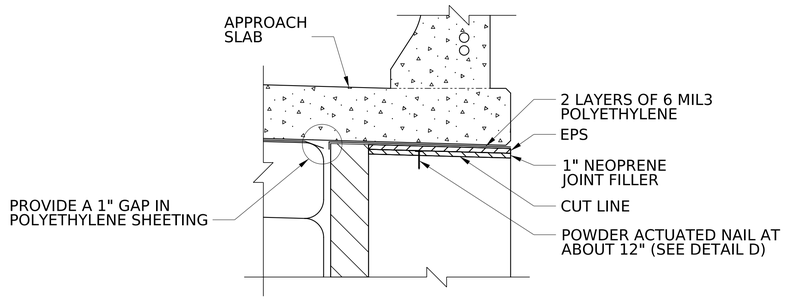

DETAIL C

TYPE F BARRIER SHOWN
NOT TO SCALE

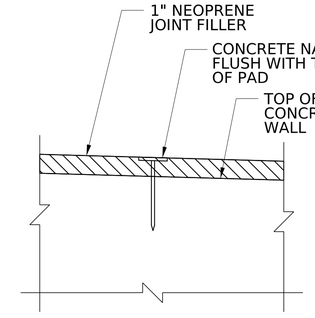

DETAIL D

NOT TO SCALE

NOTES:

1. FOR GENERAL NOTES, SEE SHEETS XX THRU XX.
2. FOR APPROACH SLAB NOTES, SEE SHEET XX.
3. WORK THIS SHEET WITH SHEETS XX THRU XX.
4. CONSTRUCT THE BARRIER ON THE LOW SIDE OF THE DECK PLUMB. CONSTRUCT THE BARRIER ON THE HIGH SIDE OF THE DECK PERPENDICULAR TO THE DECK.
5. FOR APPROACH SLAB QUANTITIES, SEE SHEET XX.

NO.	REVISION	DATE	BY

WEST VIRGINIA DEPARTMENT OF TRANSPORTATION
DIVISION OF HIGHWAYS
ENGINEERING DIVISION

I-64 OVER KANAWHA RIVER
EUGENE A. CARTER MEMORIAL BRIDGE +3

APPROACH SLAB PLAN ABUTMENT E

DESIGNED	DATE
MLH	12/25
DRAWN	
DJC	12/25
CHECKED	
REVIEWED	

Mead & Hunt

MEAD & HUNT INC.
CONSULTING ENGINEERS
CHARLESTON, WV
304-345-6712

SHEET OF

BRIDGE NO. 2563.6

14220djc $DD-MMM-YYYY HH:MM$ X:\324160025191 1.01\TECH\Structures\Ramp Elsheets\str_aps_001_Ramp E_Eugene Carter Memorial Bridge.dgn

PROJECT NUMBERS		DISTRICT	COUNTY	SHEET NO.	TOTAL
STATE	FEDERAL				
S320-64-57.44 00	NHPP-0064 (497)D	1	KANAWHA		

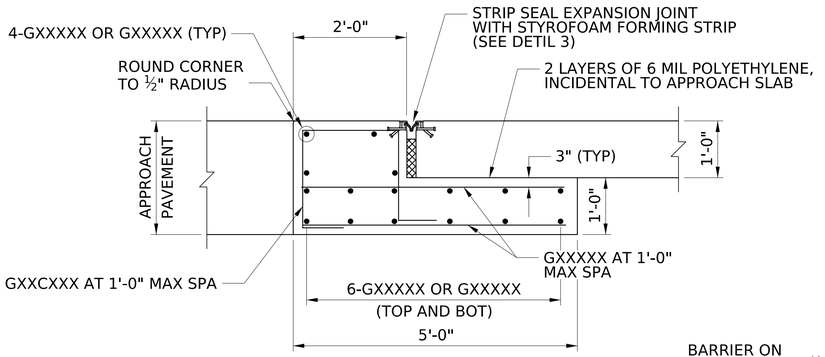

SLEEPER SLAB DETAIL

12 0 12 in.

¾" = 1'-0"

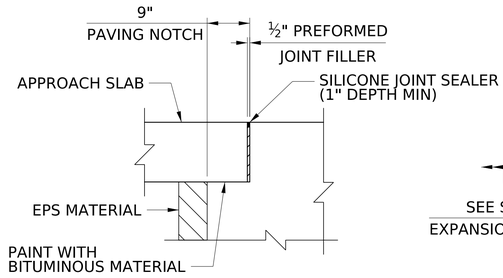

DETAIL 1

NOT TO SCALE

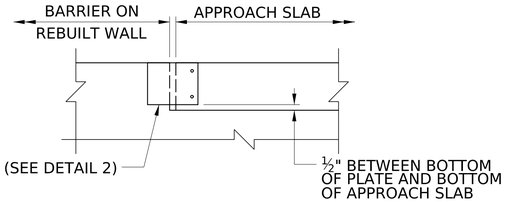

EXPANSION JOINT STEEL CLOSURE DETAIL

NOTE TO SCALE

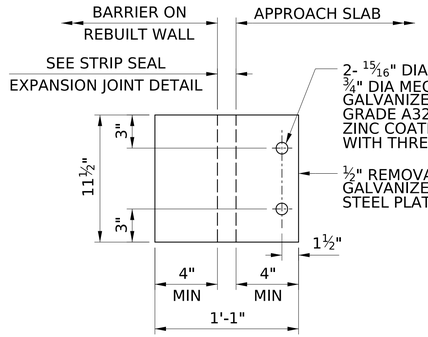

DETAIL 2
STRIP SEAL EXPANSION JOINT

NOT TO SCALE

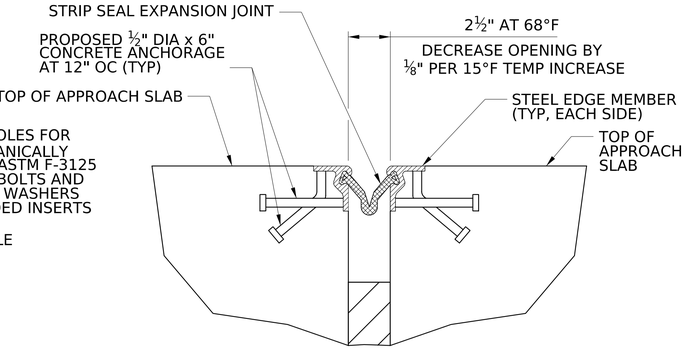

DETAIL 3
STRIP SEAL EXPANSION JOINT

NOT TO SCALE

NOTES:

1. FOR GENERAL NOTES, SEE SHEETS XX THRU XX.
2. THE APPROACH SLABS SHALL BE IN ACCORDANCE WITH ARTICLE 502 OF THE STANDARD SPECIFICATIONS, EXCEPT AS NOTED.
3. ALL REINFORCING STEEL SHALL BE GALVANIZED AND SHALL CONFORM TO AASHTO M31, GRADE 60.
4. CURING OF THE APPROACH SLABS AND SLEEPER SLABS TO BE IN ACCORDANCE WITH THE STANDARD SPECIFICATIONS.
5. ALL CONCRETE IN THE APPROACH SLABS AND SLEEPER SLABS SHALL BE CLASS B CONCRETE AND SHALL BE IN ACCORDANCE WITH SECTION 601 OF THE STANDARD SPECIFICATIONS. APPROACH SLAB CONCRETE SHALL BE PLACED AND COMPLETED AT LEAST FOUR HOURS BEFORE THE PEAK AMBIENT TEMPERATURE OF THE CONCRETE PLACEMENT DAY.
6. THE CONTRACTOR SHALL TAKE ALL NECESSARY PRECAUTIONS TO PROTECT THE SLEEPER SLAB FROM TEMPORARY LOADING OR ANY CONDITION WHICH COULD CAUSE MOVEMENT OR UNEVEN SETTLEMENT TO THE SLEEPER SLAB.
7. TO PERMIT UNHINDERED LONGITUDINAL MOVEMENT OF THE APPROACH SLAB, ACCURATELY CONTROL THE SURFACE OF THE SUBBASE COARSE TO FOLLOW AND BE PARALLEL TO THE ROADWAY GRADE AND CROSS SLOPE PRIOR TO THE PLACEMENT OF THE REINFORCEMENT, PLACE TWO LAYERS OF POLYETHYLENE BOND BREAKER AT THE BOTTOM OF THE APPROACH SLAB FOR THE FULL LENGTH AND WIDTH OF THE APPROACH SLAB, PROVIDE BOND BREAKER THAT IS 6 MIL THICK, AND PROVIDE 2'-0" LAPS.
8. THE TOP OF THE SLEEPER SLABS AND APPROACH SLAB SHALL FOLLOW THE CROSS SLOPE AND GRADE OF ROADWAY AND FINISHED ACCORDING TO SECTION 601.11.4 OF THE STANDARD SPECIFICATIONS.
9. ALL JOINT MATERIAL SHALL BE IN ACCORDANCE WITH SECTION 708 OF THE STANDARD SPECIFICATIONS.
10. FOR BARRIER TRANSITION DETAILS, SEE SHEETS XX THRU XX.
11. FOR APPROACH SLAB REINFORCEMENT SCHEDULE, SEE SHEET X.

APPROACH SLAB AT ABUTMENT E QUANTITIES

ITEM NO	DESCRIPTION	UNIT	QUANTITY	NOTE #
502001-012	12 INCH PORTLAND CEMENT CONCRETE APPROACH SLAB	SY		
	INCIDENTAL ITEMS (FOR INFORMATION ONLY)			
	TYPE 2 SLEEPER SLAB	LF		
	½" PREFORMED EXPANSION JOINT FILLER	SF		
	¾" PREFORMED EXPANSION JOINT FILLER	SF		1
	1" NEOPRENE FOAM FILLER	SF		2
	1" EXPANDED POLYSTYRENE FOAM	SF		2
	SILICONE JOINT SEALER	LF		
	6 MIL POLYETHYLENE	SF		
	BITUMINOUS MATERIAL	SF		
	GALVANIZED REINFORCING STEEL	LB		3
601003-001	CLASS K CONCRETE	CY		4
601019-001	CONCRETE PROTECTIVE COATING	SF		
602002-003	GALVANIZED REINFORCING STEEL	LB		5
627025-001	STRIP SEAL EXPANSION JOINT SYSTEM BEHIND THE APPROACH SLAB	LF		
662003-001	POLYVINYLCHLORIDE CONDUIT, 2 INCH DIAMETER, SCHEDULE 40	LF		
662006-001	JUNCTION BOX, TYPE A	EA		
662006-001	JUNCTION BOX, TYPE B	EA		

QUANTITY NOTES:

1. QUANTITY FOR FILLER BETWEEN SLEEPER SLAB AND REBUILT SECTION OF WINGWALLS.
2. QUANTITY FOR FILLER BETWEEN APPROACH SLAB AND REBUILT SECTION OF WINGWALL
3. QUANTITY FOR APPROACH SLAB AND SLEEPER SLAB.
4. QUANTITY FOR BARRIERS.
5. QUANTITY FOR BARRIERS.

EXPANSION JOINT NOTES:

1. ALL EXPANSION DAM HARDWARE AND COVER PLATES SHALL BE GALVANIZED IN ACCORDANCE WITH AASHTO M111, THE APPLICATION OF GALVANIZING SHALL BE 2 OUNCE PER SQUARE FOOT OF SURFACE. IN AREAS WHERE FIELD WELDING IS REQUIRED DUE TO FIELD SPLICING, GALVANIZING SHALL BE REMOVED PRIOR TO WELDING AND REAPPLIED AT THE SAME PREVIOUS THICKNESS.
2. PROVIDE AASHTO M270, GRADE 50 STEEL EXTRUSION MEETING THE REQUIREMENTS OF SECTION 615 OF THE SPECIFICATIONS.
3. INSTALL CONTINUOUS NEOPRENE STRIP SEAL IN THE FIELD. SPLICING OF SEAL IS NOT PERMITTED. TEMPORARY SEAL MAY BE REQUIRED DEPENDING ON STAGE OF CONSTRUCTION.
4. CONSTRUCT STEEL EXTRUSION TO MATCH ROADWAY GRADE AND CROSS SLOPE.
5. PROVIDE ALL WELDING IN THE SHOP UNLESS REQUIRED FOR STAGED CONSTRUCTION.
6. TRANSVERSE BUTT WELDS FOR SPLICING THE RETAINER TO BE PARTIAL PENETRATION DOUBLE V-GROOVE WELDS ON BEVELED EDGES, EXTENDING ALL AROUND THE JOINT AS FAR AS PRACTICAL TO ACHIEVE A WATERTIGHT SEAL. FULL PENETRATION GROOVE WELD FOR SPLICING THE RETAINER IN LIEU OF PARTIAL PENETRATION DOUBLE V-PREPARED GROOVE WELDS MAY BE USED IF SHOWN ON APPROVED SHOP DRAWINGS. DO NOT WELD INSIDE SEAL CAVITY.
7. MOVEMENT CLASSIFICATION OF SEAL TO BE NOT LESS THAN 4".
8. FABRICATOR TO PROVIDE A CHART SHOWING JOINT OPENING FOR TEMPERATURES BETWEEN -10°F TO 110°F FOR STEEL STRUCTURES, IN 10°F INTERVALS ON SHOP DRAWINGS, SET WIDTH AT 68°F, ALSO FURNISH MOVEMENT OF SEAL ON SKEW AND CERTIFY THAT SEAL IS CORRECT FOR DESIGN.
9. THE SEALS FURNISHED WITH THE RETAINERS MUST BE COMPATIBLE WITH THE RETAINER AND PROVIDE A WATERTIGHT JOINT.
10. GRIND ALL STEEL EDGES EXPOSED TO TRAFFIC OR PEDESTRIANS TO 3⁄16" MIN.
11. ALL JOINT DIMENSIONS SHOWN ARE FOR NORMAL TEMPERATURE OF 68°F.
12. THE STRIP SEAL GLANDS SHALL MEET THE MATERIAL REQUIREMENTS OF SECTION 708.2 OF THE SPECIFICATIONS.
13. ANTICIPATED JOINT LENGTH OF 23'-1"(-) BETWEEN TOES OF BARRIER AND 24'-9"(-) OVERALL, ASSUMING 10" TURNUP LENGTH AT EACH FASCIA BARRIER, FINAL LENGTH TO BE DETERMINED BY JOINT MANUFACTURER, FIELD VERIFY ALL DIMENSIONS PRIOR TO FABRICATION.
14. FOR EXPANSION JOINT BARRIERS, SEE DETAILS ON SHEETS XX THRU XX.

NO.	REVISION	DATE	BY

WEST VIRGINIA DEPARTMENT OF TRANSPORTATION
DIVISION OF HIGHWAYS
ENGINEERING DIVISION

I-64 OVER KANAWHA RIVER
EUGENE A. CARTER MEMORIAL BRIDGE +3

APPROACH SLAB DETAILS ABUTMENT E

DESIGNED	DATE
MLH	12/25
DRAWN	
DJC	12/25
CHECKED	
REVIEWED	

Mead & Hunt

MEAD & HUNT INC.
CONSULTING ENGINEERS
CHARLESTON, WV
304-345-6712

SHEET OF

BRIDGE NO. 2563.6

X:\324160025\1911.01\TECH\Structures\Ramp E\sheets\str_aps_002_Ramp E_Eugene Carter Memorial Bridge.dgn
$DD:MMM:YYYY HH:MM$
1420djc

PROJECT NUMBERS		DISTRICT	COUNTY	SHEET NO.	TOTAL
STATE	FEDERAL				
S320-64-57.44 00	NHPP-0064 (497)D	1	KANAWHA		

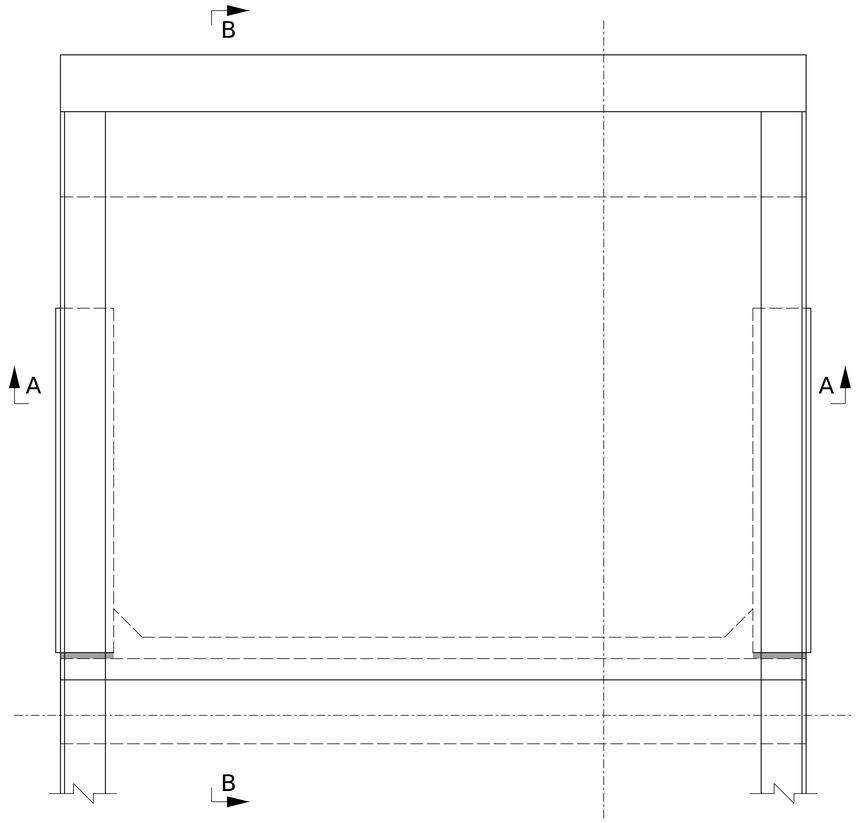

APPROACH SLAB PLAN

1 0 1 2 3 ft.

⅜" = 1'-0"

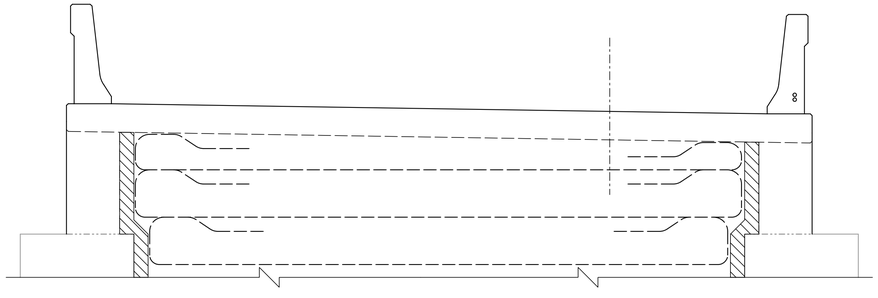

SECTION A-A

1 0 1 2 3 ft.

⅜" = 1'-0"

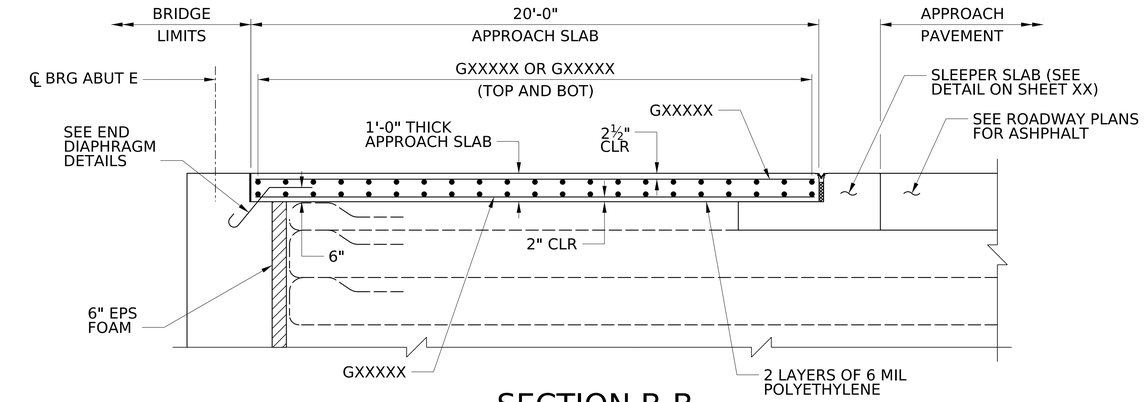

SECTION B-B

1 0 1 2 3 ft.

⅜" = 1'-0"

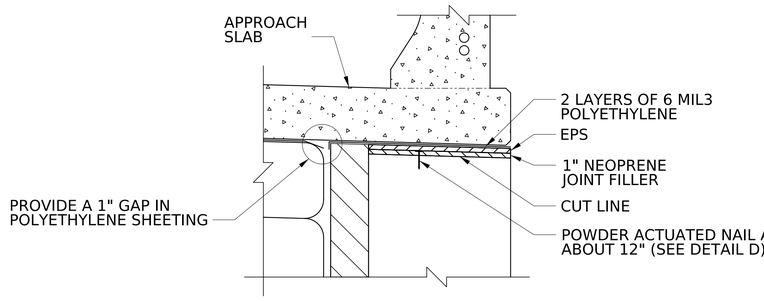

DETAIL C

TYPE F BARRIER SHOWN
NOT TO SCALE

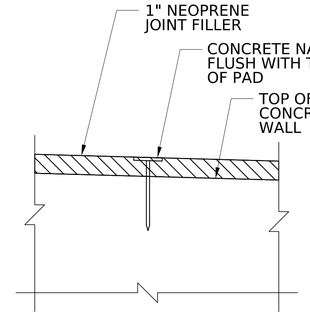

DETAIL D

NOT TO SCALE

NOTES:

1. FOR GENERAL NOTES, SEE SHEETS XX THRU XX.
2. FOR APPROACH SLAB NOTES, SEE SHEET XX.
3. WORK THIS SHEET WITH SHEETS XX THRU XX.
4. CONSTRUCT THE BARRIER ON THE LOW SIDE OF THE DECK PLUMB. CONSTRUCT THE BARRIER ON THE HIGH SIDE OF THE DECK PERPENDICULAR TO THE DECK.
5. FOR APPROACH SLAB QUANTITIES, SEE SHEET XX.

NO.	REVISION	DATE	BY

WEST VIRGINIA DEPARTMENT OF TRANSPORTATION
DIVISION OF HIGHWAYS
ENGINEERING DIVISION

I-64 OVER KANAWHA RIVER
EUGENE A. CARTER MEMORIAL BRIDGE +3

APPROACH SLAB PLAN ABUTMENT F

DESIGNED	DATE
MLH	12/25
DRAWN	
DJC	12/25
CHECKED	
REVIEWED	

Mead & Hunt

MEAD & HUNT INC.
CONSULTING ENGINEERS
CHARLESTON, WV
304-345-6712

SHEET OF

BRIDGE NO. 2563.6

14220djc $DD-MMM-YYYY HH:MM$ X:\32416000\251911.01\TECH\Structures\Ramp F\sheets\str_aps_001_Ramp F_Eugene Carter Memorial Bridge.dgn

PROJECT NUMBERS		DISTRICT	COUNTY	SHEET NO.	TOTAL
STATE	FEDERAL				
S320-64-57.44 00	NHPP-0064 (497)D	1	KANAWHA		

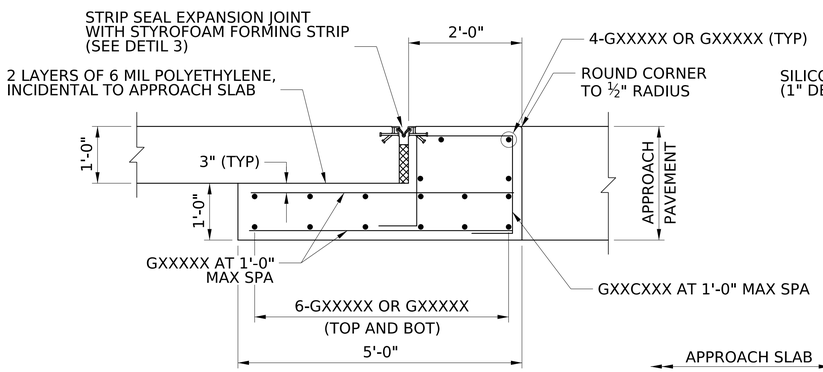

SLEEPER SLAB DETAIL

12 0 12 in.

¾" = 1'-0"

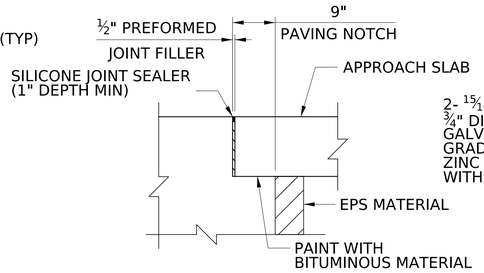

DETAIL 1

NOT TO SCALE

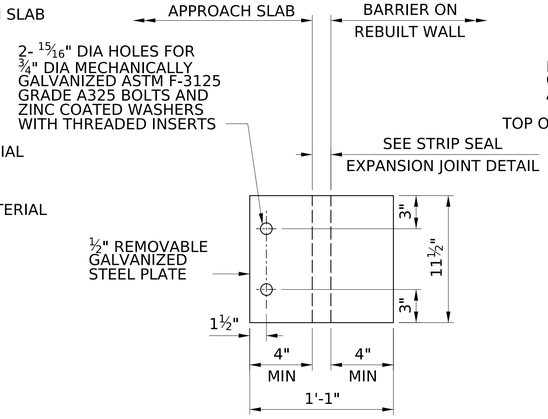

DETAIL 2
STRIP SEAL EXPANSION JOINT

NOT TO SCALE

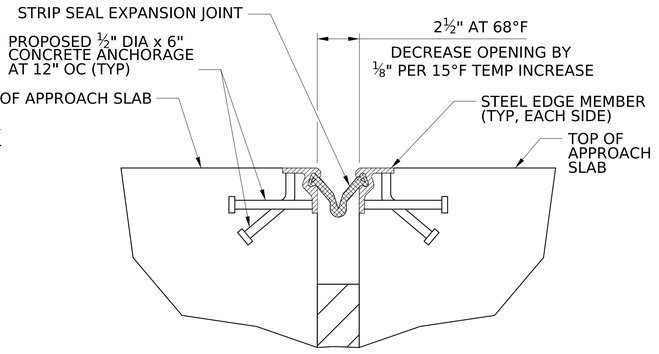

DETAIL 3
STRIP SEAL EXPANSION JOINT

NOT TO SCALE

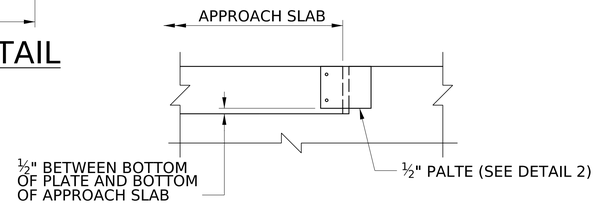

EXPANSION JOINT STEEL CLOSURE DETAIL

NOTE TO SCALE

NOTES:

1. FOR GENERAL NOTES, SEE SHEETS XX THRU XX.
2. THE APPROACH SLABS SHALL BE IN ACCORDANCE WITH ARTICLE 502 OF THE STANDARD SPECIFICATIONS, EXCEPT AS NOTED.
3. ALL REINFORCING STEEL SHALL BE GALVANIZED AND SHALL CONFORM TO AASHTO M31, GRADE 60.
4. CURING OF THE APPROACH SLABS AND SLEEPER SLABS TO BE IN ACCORDANCE WITH THE STANDARD SPECIFICATIONS.
5. ALL CONCRETE IN THE APPROACH SLABS AND SLEEPER SLABS SHALL BE CLASS B CONCRETE AND SHALL BE IN ACCORDANCE WITH SECTION 601 OF THE STANDARD SPECIFICATIONS. APPROACH SLAB CONCRETE SHALL BE PLACED AND COMPLETED AT LEAST FOUR HOURS BEFORE THE PEAK AMBIENT TEMPERATURE OF THE CONCRETE PLACEMENT DAY.
6. THE CONTRACTOR SHALL TAKE ALL NECESSARY PRECAUTIONS TO PROTECT THE SLEEPER SLAB FROM TEMPORARY LOADING OR ANY CONDITION WHICH COULD CAUSE MOVEMENT OR UNEVEN SETTLEMENT TO THE SLEEPER SLAB.
7. TO PERMIT UNHINDERED LONGITUDINAL MOVEMENT OF THE APPROACH SLAB, ACCURATELY CONTROL THE SURFACE OF THE SUBBASE COARSE TO FOLLOW AND BE PARALLEL TO THE ROADWAY GRADE AND CROSS SLOPE PRIOR TO THE PLACEMENT OF THE REINFORCEMENT, PLACE TWO LAYERS OF POLYETHYLENE BOND BREAKER AT THE BOTTOM OF THE APPROACH SLAB FOR THE FULL LENGTH AND WIDTH OF THE APPROACH SLAB, PROVIDE BOND BREAKER THAT IS 6 MIL THICK, AND PROVIDE 2'-0" LAPS.
8. THE TOP OF THE SLEEPER SLABS AND APPROACH SLAB SHALL FOLLOW THE CROSS SLOPE AND GRADE OF ROADWAY AND FINISHED ACCORDING TO SECTION 601.11.4 OF THE STANDARD SPECIFICATIONS.
9. ALL JOINT MATERIAL SHALL BE IN ACCORDANCE WITH SECTION 708 OF THE STANDARD SPECIFICATIONS.
10. FOR BARRIER TRANSITION DETAILS, SEE SHEETS XX THRU XX.
11. FOR APPROACH SLAB REINFORCEMENT SCHEDULE, SEE SHEET X.

APPROACH SLAB AT ABUTMENT F QUANTITIES

ITEM NO	DESCRIPTION	UNIT	QUANTITY	NOTE #
502001-012	12 INCH PORTLAND CEMENT CONCRETE APPROACH SLAB	SY		
	INCIDENTAL ITEMS (FOR INFORMATION ONLY)			
	TYPE 2 SLEEPER SLAB	LF		
	½" PREFORMED EXPANSION JOINT FILLER	SF		
	¾" PREFORMED EXPANSION JOINT FILLER	SF		1
	1" NEOPRENE FOAM FILLER	SF		2
	1" EXPANDED POLYSTYRENE FOAM	SF		2
	SILICONE JOINT SEALER	LF		
	6 MIL POLYETHYLENE	SF		
	BITUMINOUS MATERIAL	SF		
	GALVANIZED REINFORCING STEEL	LB		3
601003-001	CLASS K CONCRETE	CY		4
601019-001	CONCRETE PROTECTIVE COATING	SF		
602002-003	GALVANIZED REINFORCING STEEL	LB		5
627025-001	STRIP SEAL EXPANSION JOINT SYSTEM BEHIND THE APPROACH SLAB	LF		
662003-001	POLYVINYLCHLORIDE CONDUIT, 2 INCH DIAMETER, SCHEDULE 40	LF		
662006-001	JUNCTION BOX, TYPE A	EA		
662006-001	JUNCTION BOX, TYPE B	EA		

QUANTITY NOTES:

1. QUANTITY FOR FILLER BETWEEN SLEEPER SLAB AND REBUILT SECTION OF WINGWALLS.
2. QUANTITY FOR FILLER BETWEEN APPROACH SLAB AND REBUILT SECTION OF WINGWALL
3. QUANTITY FOR APPROACH SLAB AND SLEEPER SLAB.
4. QUANTITY FOR BARRIERS.
5. QUANTITY FOR BARRIERS.

EXPANSION JOINT NOTES:

1. ALL EXPANSION DAM HARDWARE AND COVER PLATES SHALL BE GALVANIZED IN ACCORDANCE WITH AASHTO M111, THE APPLICATION OF GALVANIZING SHALL BE 2 OUNCE PER SQUARE FOOT OF SURFACE. IN AREAS WHERE FIELD WELDING IS REQUIRED DUE TO FIELD SPLICING, GALVANIZING SHALL BE REMOVED PRIOR TO WELDING AND REAPPLIED AT THE SAME PREVIOUS THICKNESS.
2. PROVIDE AASHTO M270, GRADE 50 STEEL EXTRUSION MEETING THE REQUIREMENTS OF SECTION 615 OF THE SPECIFICATIONS.
3. INSTALL CONTINUOUS NEOPRENE STRIP SEAL IN THE FIELD. SPLICING OF SEAL IS NOT PERMITTED. TEMPORARY SEAL MAY BE REQUIRED DEPENDING ON STAGE OF CONSTRUCTION.
4. CONSTRUCT STEEL EXTRUSION TO MATCH ROADWAY GRADE AND CROSS SLOPE.
5. PROVIDE ALL WELDING IN THE SHOP UNLESS REQUIRED FOR STAGED CONSTRUCTION.
6. TRANSVERSE BUTT WELDS FOR SPLICING THE RETAINER TO BE PARTIAL PENETRATION DOUBLE V-GROOVE WELDS ON BEVELED EDGES, EXTENDING ALL AROUND THE JOINT AS FAR AS PRACTICAL TO ACHIEVE A WATERTIGHT SEAL. FULL PENETRATION GROOVE WELD FOR SPLICING THE RETAINER IN LIEU OF PARTIAL PENETRATION DOUBLE V-PREPARED GROOVE WELDS MAY BE USED IF SHOWN ON APPROVED SHOP DRAWINGS. DO NOT WELD INSIDE SEAL CAVITY.
7. MOVEMENT CLASSIFICATION OF SEAL TO BE NOT LESS THAN 4".
8. FABRICATOR TO PROVIDE A CHART SHOWING JOINT OPENING FOR TEMPERATURES BETWEEN -10°F TO 110°F FOR STEEL STRUCTURES, IN 10°F INTERVALS ON SHOP DRAWINGS, SET WIDTH AT 68°F, ALSO FURNISH MOVEMENT OF SEAL ON SKEW AND CERTIFY THAT SEAL IS CORRECT FOR DESIGN.
9. THE SEALS FURNISHED WITH THE RETAINERS MUST BE COMPATIBLE WITH THE RETAINER AND PROVIDE A WATERTIGHT JOINT.
10. GRIND ALL STEEL EDGES EXPOSED TO TRAFFIC OR PEDESTRIANS TO 3/16" MIN.
11. ALL JOINT DIMENSIONS SHOWN ARE FOR NORMAL TEMPERATURE OF 68°F.
12. THE STRIP SEAL GLANDS SHALL MEET THE MATERIAL REQUIREMENTS OF SECTION 708.2 OF THE SPECIFICATIONS.
13. ANTICIPATED JOINT LENGTH OF 23'-1"(-) BETWEEN TOES OF BARRIER AND 24'-9"(-) OVERALL, ASSUMING 10" TURNUP LENGTH AT EACH FASCIA BARRIER, FINAL LENGTH TO BE DETERMINED BY JOINT MANUFACTURER, FIELD VERIFY ALL DIMENSIONS PRIOR TO FABRICATION.
14. FOR EXPANSION JOINT BARRIERS, SEE DETAILS ON SHEETS XX THRU XX.

NO.	REVISION	DATE	BY

WEST VIRGINIA DEPARTMENT OF TRANSPORTATION
DIVISION OF HIGHWAYS
ENGINEERING DIVISION

I-64 OVER KANAWHA RIVER
EUGENE A. CARTER MEMORIAL BRIDGE +3

APPROACH SLAB DETAILS ABUTMENT F

DESIGNED	MLH
DATE	12/25
DRAWN	DJC
DATE	12/25
CHECKED	
REVIEWED	

Mead & Hunt

MEAD & HUNT INC.
CONSULTING ENGINEERS
CHARLESTON, WV
304-345-6712

SHEET OF

BRIDGE NO. 2563.6

X:\324160025\1911.01\TECH\Structures\Ramp F\sheets\str_aps_002_Ramp F_Eugene Carter Memorial Bridge.dgn
$DD-MMM-YYYY HH:MM$
1420djc

PROJECT NUMBERS		DISTRICT	COUNTY	SHEET NO.	TOTAL
STATE	FEDERAL				
S320-64-57.44 00	NHPP-0064 (497)D	1	KANAWHA		

THE FOLLOWING ADDITIONAL SHEETS ARE TO BE DEVELOPED ALONG WITH THE APPROXIMATE NUMBER OF SHEETS:

APPROACH SLAB GENERAL DETAILS - 1 SHEET
BARRIER ON APPROACH SLAN - 5 SHEETS
SIGN SUPPORT DETAILS - 5 SHEETS

NO.	REVISION	DATE	BY

WEST VIRGINIA DEPARTMENT OF TRANSPORTATION
DIVISION OF HIGHWAYS
ENGINEERING DIVISION

I-64 OVER KANAWHA RIVER
EUGENE A. CARTER MEMORIAL BRIDGE +3

ADDITIONAL SHEETS TO BE DEVELOPED

DESIGNED	DATE
DRAWN	
CHECKED	
REVIEWED	

HDR ENGINEERING INC.
CONSULTING ENGINEERS
CHARLESTON, WV
681-341-6100

SHEET OF

BRIDGE NO. 2563.6

SNOLEN $DD-MMM-YYYY HH:MM$ pw://pwhdruseas02.intranet.hdr:HDR_US_East_02/Documents/WV_DOT/WVDOT-Eugene_Carter_Bridge_3/6.0_CAD_BIM/6.2_WIP/HDR/6.2.2_Sheet_Files/23_Structure/Reference/str_ref_bdr_Eugene Carter Memorial.dgn

PROJECT NUMBERS		DISTRICT	COUNTY	SHEET NO.	TOTAL
STATE	FEDERAL				
S320-64-57.44 00	NHPP-0064 (497)D	1	KANAWHA		

PER DISCUSSIONS WITH WVDOH (AHMAD & BROWN), RATING SHEETS WILL BE SUBMITTED AS AN ADDENDUM TO THE CONSTRUCTION PLAN SET APPROXIMATELY 6 WEEKS AFTER THE CONSTRUCTION PLAN SET IS SUBMITTED AT THE END OF FEBRUARY 2026.

NO.	REVISION	DATE	BY

WEST VIRGINIA DEPARTMENT OF TRANSPORTATION
DIVISION OF HIGHWAYS
ENGINEERING DIVISION

I-64 OVER KANAWHA RIVER
EUGENE A. CARTER MEMORIAL BRIDGE +3

RATING SHEETS

DESIGNED	DATE
DRAWN	
CHECKED	
REVIEWED	

HDR ENGINEERING INC.
CONSULTING ENGINEERS
CHARLESTON, WV
681-341-6100

SHEET OF

BRIDGE NO. 2563.6

SNOLEN $DD-MMM-YYYY HH:MM$ pw://pwhdruseas02.intranet.hdr:HDR_US_East_02/Documents/WV_DOT/WVDOT-Eugene_Carter_Bridge_3/6.0_CAD_BIM/6.2_WIP/HDR/6.2.2_Sheet_Files/23_Structure/Reference/str_ref_bdr_Eugene Carter Memorial.dgn