WEST VIRGINIA
DEPARTMENT OF TRANSPORTATION
DIVISION OF HIGHWAYS

PLANS FOR CONSTRUCTION

OF

STATE HIGHWAY

FEDERAL PROJECT NO. NHPP-0064(497)D

STATE PROJECT NO. S320-64-57.44 00

I-64

CHARLESTON DISTRICT

KANAWHA COUNTY

EUGENE A. CARTER MEMORIAL BRIDGE +3

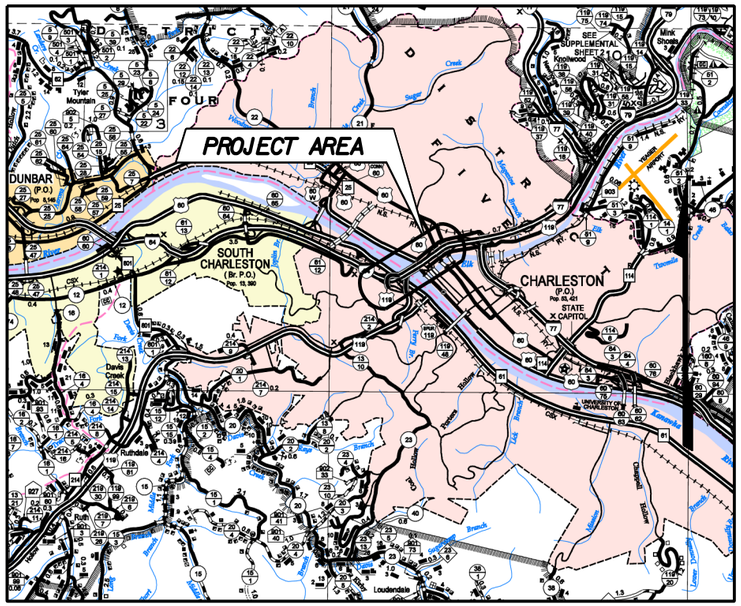

	Station		Station		f.t.		mile(s)
Roadway WB	397+50.00	to	400+78.25	=	328.25	=	0.06
Roadway EB	397+50.00	to	401+46.25	=	396.25	=	0.08
Bridge WB	400+78.25	to	420+00.00	=	1,921.75	=	0.36
Bridge EB	401+46.25	to	420+00.00	=	1,853.75	=	0.35
		Total Project Length		=	4,500.00	=	0.85

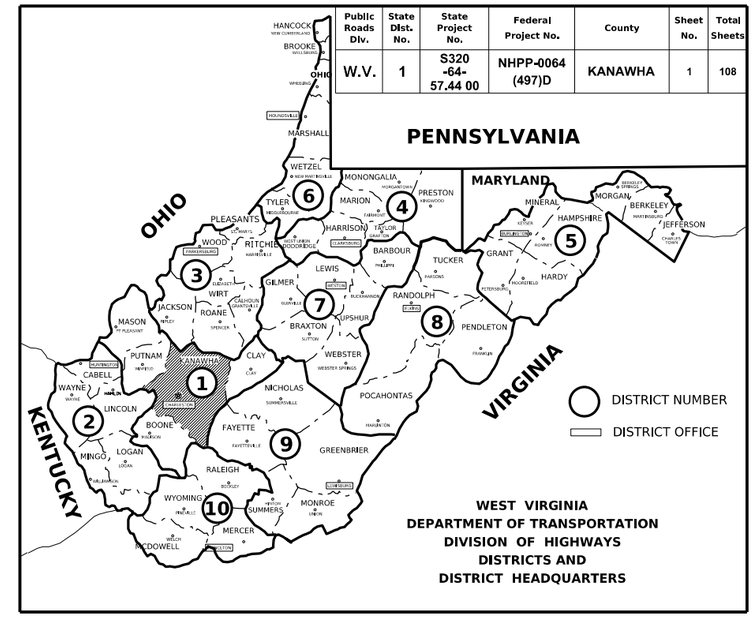

Public Roads Div.	State Dist. No.	State Project No.	Federal Project No.	County	Sheet No.	Total Sheets
W.V.	1	S320 -64- 57.44 00	NHPP-0064 (497)D	KANAWHA	1	108

UTILITIES ENCOUNTERED

ALPHA TECHNOLOGIES
AMERICAN ELECTRIC POWER
AT&T TRANSMISSION
CHARLESTON SANITARY BOARD
CSX RAILROAD
FIBERLIGHT
FRONTIER
MOUNTAINEER GAS COMPANY
OPTIMUM
SEGRA
SPRINT/NEXTEL (ON RAILROAD PROPERTY)
WEST VIRGINIA AMERICAN WATER

BEGIN PROJECT
S320-64-57.44 00
STA. 397+50.00

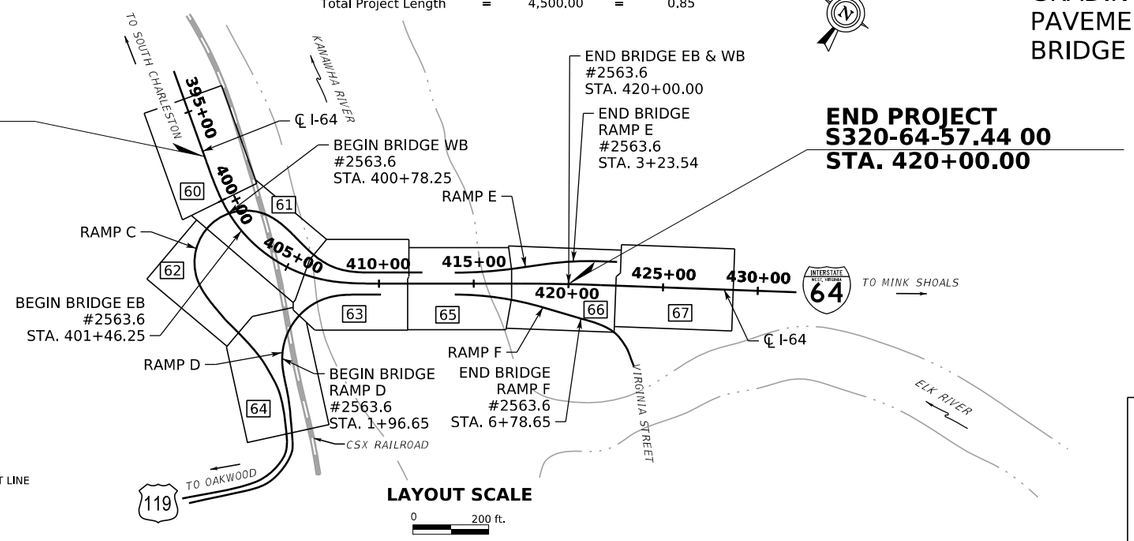

END PROJECT
S320-64-57.44 00
STA. 420+00.00

TYPE OF CONSTRUCTION

GRADING, DRAINAGE, PAVING, SIGNING, PAVEMENT MARKINGS, LIGHTING, BRIDGE #2563.6

60% PROGRESS SET
12/12/2025

SCALES:

PLAN 0 — 20 ft.

PROFILE VERT. 0 — 5 ft.; HOR. 0 — 20 ft.

CONVENTIONAL SIGNS

STATE LINE
COUNTY LINE
CORPORATION LINE
PROPOSED R/W & EASEMENT LINE
EXISTING R/W LINE
PROPERTY LINE
EXISTING FENCE
PROPOSED FENCE
EDGE OF STREAM
PROPOSED GUARD RAIL
EXISTING GUARD RAIL
RAILROAD
GAS LINE
WATER LINE
TELEPHONE LINE
ELECTRIC LINE
TELEPHONE POLE
POWER POLE
COMBINED POWER AND TELEPHONE POLE
TREE
SHRUB
RIGHT OF WAY MARKER

DESIGN DESIGNATION

A.D.T. (2026) = 85,525
A.D.T. (2046) = 115,631
D.H.V. = 8,502
D = 63.2%
T (DHV) = 1,079
V = 60 MPH

INDEX TO SHEETS

NO.	DESCRIPTION
1	TITLE SHEET
2 - 3	TYPICAL SECTIONS
4	SUMMARY OF QUANTITIES
5	QUANTITY TABLES
6	GENERAL NOTES
7 - 8	GEOMETRIC LAYOUT
9 - 14	SUPERELEVATION TABLES AND DIAGRAMS
15 - 59	TTCP - TEMPORARY TRAFFIC CONTROL
60 - 67	PLAN SHEETS
68 - 84	PROFILES
85 - 103	SIGNING PLANS (NOT INCLUDED WITH THIS SUBMISSION)
104 - 108	CROSS SECTIONS

REVISION NUMBER	SHEET NUMBER	REVISION	DATE	BY

SIGNED . . . . . RESPONSIBLE CHARGE ENGINEER

DATE . . . . . .

PLANS PREPARED BY

HDR ENGINEERING, INC.
CONSULTING ENGINEERS
CHARLESTON, WV
681-341-6100

RECOMMENDED . . . . . PROJECT MANAGER

RECOMMENDED FOR APPROVAL . . . . . STATE HWY ENGINEER

APPROVED . . . . . COMMISSIONER OF HIGHWAYS

PROJECT NO. S320-64-57.44 00 , NHPP-0064(497)D

J05C30C08-TITLE I

C:\Users\d07141\Desktop\File Sheet Cells\WVDOT_Title Borders.cel

9/11/2025 7:50:02 PM

d07141

Public Roads Div.	State Dist. No.	State Project No.	Federal Project No.	County	Sheet No.	Total Sheets
W.V.	1	S320 -64- 57,44 00	NHPP-0064 (497)D	KANAWHA	2	108

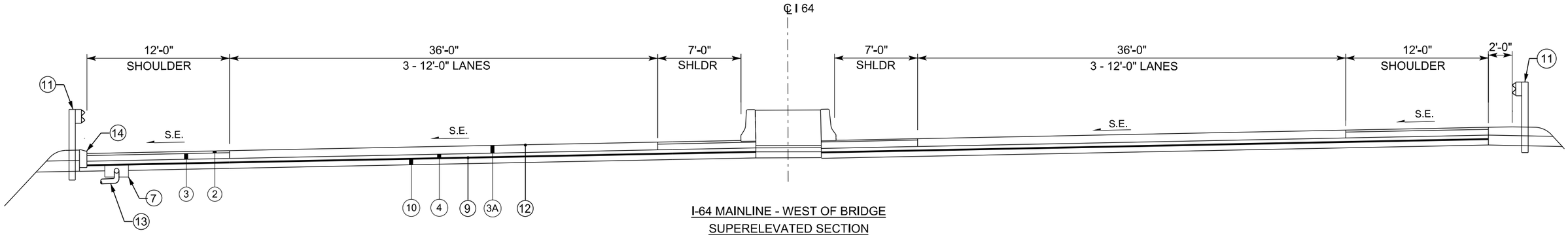

I-64 MAINLINE - WEST OF BRIDGE
SUPERELEVATED SECTION

WB STA. 400+00.00 TO STA. 400+78.25
EB STA. 400+75.00 TO STA. 401+46.25

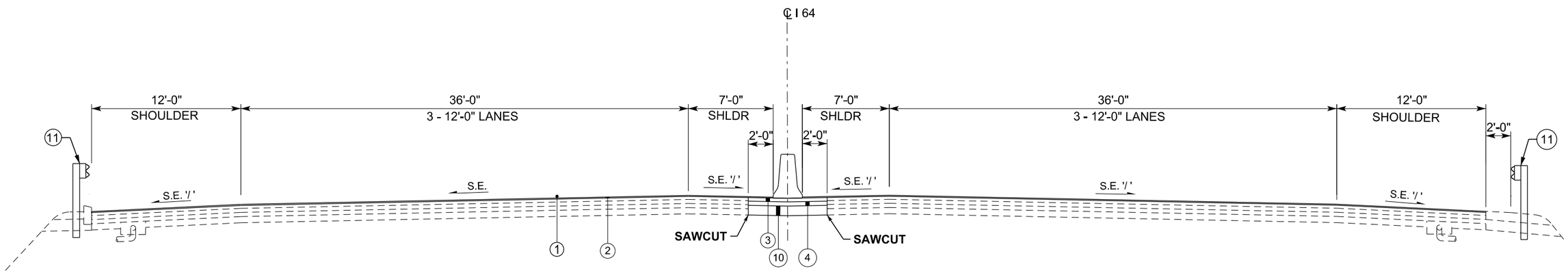

I-64 MAINLINE
NORMAL SECTION

WB STA. 397+50.00 TO STA. 400+00.00
EB STA. 400+75.00TO STA. 399+75.00

LEGEND

1. **415005-001 - STANDARD MILLING, SY**
2. **402001-040 - SUPERPAVE ASPHALT SKID PVT, SG, TYPE 9.5, TN**
3. **401001-040 - SUPERPAVE ASPHALT BASE COURSE, SG, TYPE, 19, TN**
3A. **501001-009 - PORTLAND CEMENT CONCRETE PAVEMENT, SY**
4. **401001-042 - SUPERPAVE ASPHALT BASE COURSE, SG, TYPE, 25, TN**
5. **610001-001 - PLAIN CONCRETE CURBING, TYPE I, LF**
6. **307001-000 - AGGREGATE BASE COURSE, CLASS 1, CY**
7. **606029-001 - FREE DRAINING BASE TRENCH, LF**
8. **311006-001 - OPEN GRADED FREE DRAINING BASE COURSE, CY**
9. **207034-000 - FABRIC FOR SEPARATION, SY**
10. **207002-000 - SUBGRADE, CY**
11. **607001-001 - TYPE 1 GUARDRAIL, CLASS I, LF**
12. **408002-001 - ASPHALT MATERIAL, GA**
13. **606030-001 - OUTLET PIPE, 6 INCH, LF**
14. **610001-003 - PLAIN CONCRETE CURBING, TYPE III, LF**

HDR ENGINEERING INC.
CHARLESTON, WV
681-341-6100

REVISION NUMBER	SHEET NUMBER	REVISION	DATE	BY

THE WEST VIRGINIA DEPARTMENT OF TRANSPORTATION
DIVISION OF HIGHWAYS

TYPICAL SECTIONS

J04C23C03-NOTES

Public Roads Div.	State Dist. No.	State Project No.	Federal Project No.	County	Sheet No.	Total Sheets
W.V.	1	S320 -64- 57,44 00	NHPP-0064 (497)D	KANAWHA	3	108

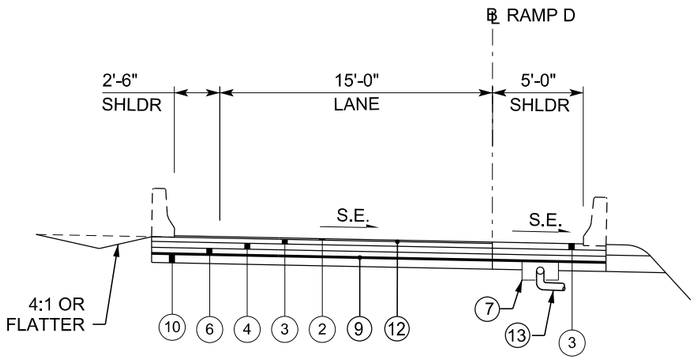

RAMP D
STA. 1+00.00 TO STA. 1+96.65

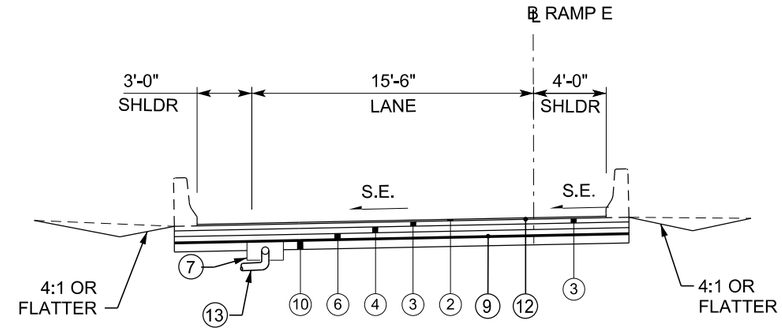

RAMP E
STA. 2+50.00 TO STA. 3+00.29

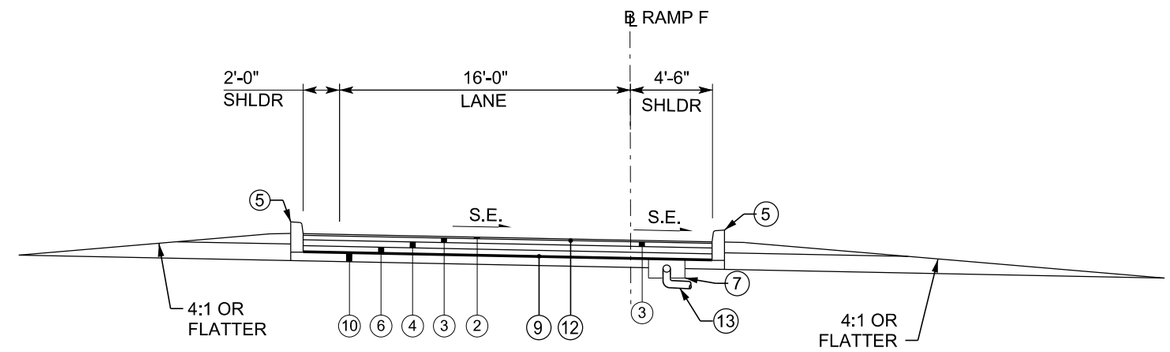

RAMP F
STA. 7+00.65 TO STA. 7+60.00

LEGEND

1. 415005-001 - STANDARD MILLING, SY
2. 402001-040 - SUPERPAVE ASPHALT SKID PVT, SG, TYPE 9.5, TN
3. 401001-040 - SUPERPAVE ASPHALT BASE COURSE, SG, TYPE, 19, TN
3A. 501001-009 - PORTLAND CEMENT CONCRETE PAVEMENT, SY
4. 401001-042 - SUPERPAVE ASPHALT BASE COURSE, SG, TYPE, 25, TN
5. 610001-001 - PLAIN CONCRETE CURBING, TYPE I, LF
6. 307001-000 - AGGREGATE BASE COURSE, CLASS 1, CY
7. 606029-001 - FREE DRAINING BASE TRENCH, LF
8. 311006-001 - OPEN GRADED FREE DRAINING BASE COURSE, CY
9. 207034-000 - FABRIC FOR SEPARATION, SY
10. 207002-000 - SUBGRADE, CY
11. 607001-001 - TYPE 1 GUARDRAIL, CLASS I, LF
12. 408002-001 - ASPHALT MATERIAL, GA
13. 606030-001 - OUTLET PIPE, 6 INCH, LF
14. 610001-003 - PLAIN CONCRETE CURBING, TYPE III, LF

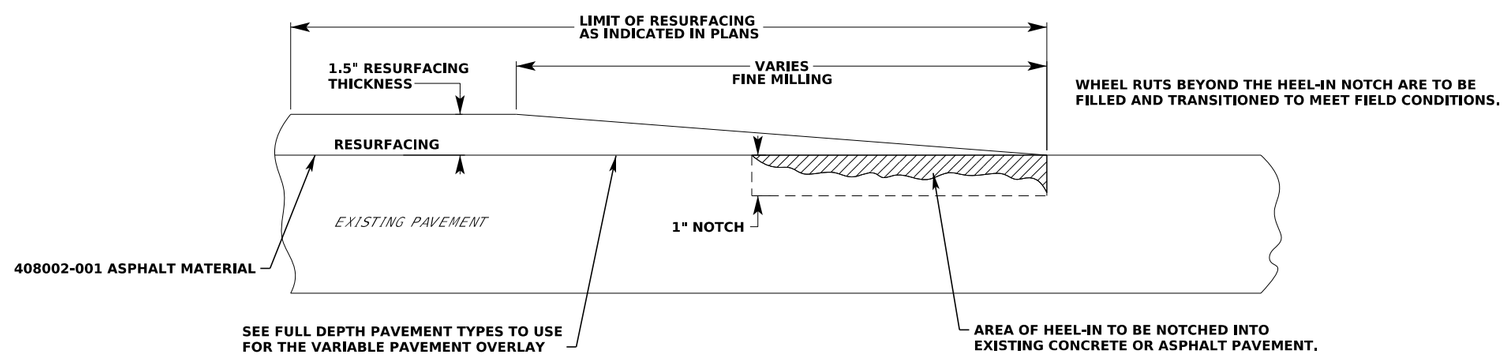

1. PAYMENT FOR HEEL-IN TO BE INCLUDED IN VARIOUS PAY ITEMS OF THIS PROJECT.

HDR ENGINEERING INC.
CHARLESTON, WV
681-341-6100

REVISION NUMBER	SHEET NUMBER	REVISION	DATE	BY

THE WEST VIRGINIA DEPARTMENT OF TRANSPORTATION
DIVISION OF HIGHWAYS

TYPICAL SECTIONS

J04C23C03-NOTES

Public Roads Div.	State Dist. No.	State Project No.	Federal Project No.	County	Sheet No.	Total Sheets
W.V.	1	S320 -64- 57.44 00	NHPP-0064 (497)D	KANAWHA	4	108

SUMMARY OF ESTIMATED QUANTITIES

ITEM NO.	ALT. *	DESCRIPTION	UNIT	QTY.
		ROADWAY		
201001-000		CLEARING AND GRUBBING	LS	
204001-000		MOBILIZATION	LS	
207001-001		UNCLASSIFIED EXCAVATION	CY	
207002-000		SUBGRADE	CY	
207034-000		FABRIC FOR SEPARATION	SY	
307001-000		AGGREGATE BASE COURSE, CLASS 1	CY	
401001-040		SUPERPAVE ASPHALT BASE COURSE, SG, TYPE 19	TN	
401001-042		SUPERPAVE ASPHALT BASE COURSE, SG, TYPE 25	TN	
402001-040		SUPERPAVE ASPHALT SKID PAVEMENT, SG, TYPE 9.5	TN	
415005-001		STANDARD MILLING	SY	
606029-001		FREE DRAINING BASE TRENCH	LF	
606030-001		OUTLET PIPE, 6 INCH	LF	
607001-001		TYPE 1 GUARDRAIL, CLASS I	LF	
607006-001		THRIE BEAM GUARDRAIL BRIDGE TRANSITION	EA	
607030-001		SPECIAL TRAILING END TERMINAL	EA	
610001-001		PLAIN CONCRETE CURBING, TYPE 1	LF	
610021-001		SINGLE FACED BARRIER, TYPE F	LF	
640003-001		SMALL FIELD OFFICE	MO	
640006-001		BUILDING EQUIPMENT	LS	
664025-001		IMPACT ATTENUATING DEVICE, C-2, TL-3, 24	EA	

HDR ENGINEERING INC.
CHARLESTON, WV
681-341-6100

REVISION NUMBER	SHEET NUMBER	REVISION	DATE	BY

THE WEST VIRGINIA DEPARTMENT OF TRANSPORTATION
DIVISION OF HIGHWAYS

SUMMARY OF QUANTITIES

Public Roads Div.	State Dist. No.	State Project No.	Federal Project No.	County	Sheet No.	Total Sheets
W.V.	1	S320 -64- 57,44 00	NHPP-0064 (497)D	KANAWHA	5	108

PAVING QUANTITIES

LOCATION	LOCATION		DIRECTION	SIDE	LENGTH	AREA	AREA	207001-001	402001-040	401001-040	401001-042	307001-000	207002-000	606029-001	415005-001	207034-000	606030-001
								UNCLASSIFIED EXCAVATION	SUPERPAVE ASPHALT SKID PAVEMENT, SG, TYPE 9.5	SUPERPAVE ASPHALT BASE COURSE, SG, TYPE 19	SUPERPAVE ASPHALT BASE COURSE, SG, TYPE 25	AGGREGATE BASE COURSE, CLASS 1	SUBGRADE	FREE DRAINING BASE TRENCH	STANDARD MILLING	FABRIC FOR SEPARATION	OUTLET PIPE, 6 INCH
	STATION	STATION			FT	SY	SY	CY	TN	TN	TN	CY	CY	LF	SY	SY	LF
	TOTAL																

GUARDRAIL

LOCATION		SIDE	*STATION LENGTH*	DESIGN LENGTH	BASELINE	ITEM 607001-001 TYPE 1 GUARDRAIL, CLASS I	ITEM 607006-001 THRIE BEAM GUARDRAIL BRIDGE TRANSITION	ITEM 607030-001 SPECIAL TRAILING END TERMINAL	ITEM 664025-001 IMPACT ATTENUATING DEVICE, C-2, TL-3, 24	COMMENTS
STATION	STATION					LF	EA	EA	EA	
TOTAL										

GUARDRAIL

LOCATION		SIDE	STATION LENGTH	BASELINE	ITEM 610001-001 PLAIN CONCRETE CURBING, TYPE 1	ITEM CURB REMOVAL	ITEM 610021-001 SINGLE FACED BARRIER, TYPE F	ITEM BARRIER REMOVAL
STATION	STATION				LF	LF	LF	LF
TOTAL								

HDR ENGINEERING INC.
CHARLESTON, WV
681-341-6100

REVISION NUMBER	SHEET NUMBER	REVISION	DATE	BY

THE WEST VIRGINIA DEPARTMENT OF TRANSPORTATION
DIVISION OF HIGHWAYS

QUANTITY TABLES

J04C23C03-NOTES

c:\pwworking\oasis\d1035597\B-05585.dgn

jcondel

Public Roads Div.	State Dist. No.	State Project No.	Federal Project No.	County	Sheet No.	Total Sheets
W.V.	1	S320 -64- 57,44 00	NHPP-0064 (497)D	KANAWHA	SGNS01	S108

GOVERNING SPECIFICATIONS

THE WEST VIRGINIA DEPARTMENT OF TRANSPORTATION, DIVISION OF HIGHWAYS, STANDARD SPECIFICATIONS, ROADS AND BRIDGES, ADOPTED 2023, AS AMENDED BY THE WEST VIRGINIA DEPARTMENT OF TRANSPORTATION, DIVISION OF HIGHWAYS, SUPPLEMENTAL SPECIFICATIONS, DATED JANUARY 2025, THE CONTRACT DOCUMENTS, AND THE CONTRACT PLANS ARE THE GOVERNING PROVISIONS APPLICABLE TO THIS PROJECT.

STANDARD DETAILS

THE WEST VIRGINIA DEPARTMENT OF TRANSPORTATION, DIVISION OF HIGHWAYS, STANDARD DETAILS BOOK, VOLUME I ISSUED MAY, 2016 AND VOLUME II ISSUED JANUARY 1, 2019 ARE APPLICABLE TO THIS PROJECT.

THE CONTRACTOR IS EXPECTED TO HAVE COPIES OF THE LATEST STANDARD DETAILS BOOK AND ANY REVISIONS, WHICH CAN BE FOUND AT:
WWW.TRANSPORTATION.WV.GOV/HIGHWAYS/ENGINEERING/PAGES/DETAILS.ASPX.

UTILITIES

EXISTING UTILITIES SHOWN ON THE PLANS HAVE BEEN LOCATED BASED ON FIELD SURFACE EVIDENCE AND INFORMATION PROVIDED BY THE UTILITY. IT SHALL BE THE RESPONSIBILITY OF THE CONTRACTOR TO CALL WEST VIRGINIA 811 AND TO ACCURATELY LOCATE ALL UTILITIES BY EXPLORATORY DIGGING IF NECESSARY.

WHEN WORKING NEAR EXISTING UNDERGROUND UTILITIES EXTREME CAUTION SHOULD BE USED. ALL EXCAVATIONS NEAR THE UNDERGROUND UTILITIES SHALL BE SHORED TO PREVENT MOVEMENT. ANY DAMAGE TO THE UTILITIES WILL BE THE RESPONSIBILITY OF THE CONTRACTOR.

NOISE POLLUTION CONTROL

THE CONTRACTOR SHALL COMPLY WITH ALL STATE AND LOCAL SOUND CONTROL AND NOISE LEVEL RULES, REGULATIONS, AND ORDINANCES WHICH APPLY TO ANY WORK PERFORMED PURSUANT TO THE CONTRACT. EACH INTERNAL COMBUSTION ENGINE USED FOR ANY PURPOSE ON WORK RELATED TO THE PROJECT SHALL BE EQUIPPED WITH A MUFFLER OF A TYPE RECOMMENDED BY THE MANUFACTURER. NO INTERNAL COMBUSTION ENGINE SHALL BE OPERATED ON THE PROJECT WITHOUT SUCH MUFFLER.

WORK IS PROHIBITED BETWEEN 10:00 PM AND 6:00 AM. RESIDENTS WITHIN 600 FEET OF THE CONSTRUCTION LIMITS MUST BE NOTIFIED PRIOR TO COMMENCEMENT OF PILE DRIVING OR OTHER VIBRATORY WORK ACTIVITIES.

ACCESS TO PUBLIC AND PRIVATE ROADS

THE CONTRACTOR SHALL MAINTAIN SUITABLE ACCESS TO ALL PUBLIC ROADS, PRIVATE ROADS, AND DRIVEWAYS DURING CONSTRUCTION.

EROSION AND SEDIMENT CONTROL

THE CONTRACTOR SHALL BE RESPONSIBLE FOR SITE SPECIFIC EROSION AND SEDIMENT CONTROL (ESC) FEATURES BASED ON THE CONTRACTOR'S MEANS, METHODS, AND PHASING. THE CONTRACTOR'S SWPPP SHALL PROVIDE THE LOCATION OF THE ESC FEATURES INCLUDING BUT NOT LIMITED TO SEDIMENT TRAPS, ACCESS ROADS, INTERNAL CONTROLS, ETC. THE ESC FEATURES SHALL BE DESIGNED AND INSTALLED IN ACCORDANCE WITH THE WVDEP EROSION AND SEDIMENT CONTROL BEST MANAGEMENT PRACTICE MANUAL (2006 EDITION, REVISED AUGUST 29, 2016), DETAILS IN THE PLANS, THE CONDITIONS OF THE NPDES PERMIT AND THE MANUFACTURER'S RECOMMENDATIONS (AS APPLICABLE).
ENHANCED BMPS SHALL BE USED ON THIS PROJECT, INCLUDING BUT NOT LIMITED TO:

* INSPECTION OF ALL ESC BMPS WITHIN THE PROJECT AREA BY A QUALIFIED PERSON AT LEAST ONCE EVERY FOUR (4) CALENDAR DAYS AND WITHIN 24 HOURS AFTER ANY PRECIPITATION EVENT OF 0.25 INCHES OR GREATER PER 24 HOUR PERIOD OR THE OCCURRENCE OF RUNOFF FROM SNOWMELT SUFFICIENT TO CAUSE A DISCHARGE. INSPECTION REPORTS SHOULD INCLUDE THE INFORMATION DETAILED IN EXHIBIT 6. REPORTS MUST BE PROVIDED TO THE DIVISION WITHIN 7 CALENDAR DAYS OF INSPECTION.

* REPAIRS OR MAINTENANCE OF ANY DEFECTIVE BMPS IDENTIFIED DURING THE INSPECTION SHALL BE PERFORMED WITHIN 24 HOURS. HOWEVER, PERMITTEES MUST IMPLEMENT ALTERNATE BMPS PRIOR TO STORM EVENTS WHILE AWAITING REPAIR OF THE PRIMARY ENHANCED BMP.

* TEMPORARY SEEDING AND MULCHING OF DISTURBED AREAS WITHIN FOUR (4) DAYS WHEN THOSE AREAS WILL NOT BE RE-DISTURBED FOR MORE THAN 14 DAYS.

* PERMANENT SEEDING AND MULCHING WITHIN FOUR (4) DAYS OF REACHING FINAL GRADE.

* FINAL STABILIZATION WITHIN FOUR (4) DAYS AFTER CONSTRUCTION HAS BEEN COMPLETE

* SEDIMENT AND EROSION CONTROLS THAT ARE MORE PROTECTIVE OF THE ENVIRONMENT THAN THOSE ROUTINELY EMPLOYED (E.G. SUPER SILT FENCE, SMARTFENCE OR EQUIVALENT, WOVEN BELTED SILT FENCE, 18" OR LARGER COMPOST SOCKS).

FERTILIZER, SEEDING AND MULCHING

ALL DISTURBED SOIL AREAS ARE TO BE SEEDED, MULCHED AND FERTILIZED. SEEDING AND MULCHING WILL BE AS SPECIFIED IN SECTION 642 AND SECTION 652 OF THE STANDARD SPECIFICATIONS. TESTING WILL NOT BE REQUIRED ON THOSE ITEMS WHEN PURCHASED FROM A REPUTABLE DEALER.

Public Roads Div.	State Dist. No.	State Project No.	Federal Project No.	County	Sheet No.	Total Sheets
W.V.	1	S320 -64- 57.44 00	NHPP-0064 (497)D	KANAWHA	7	108

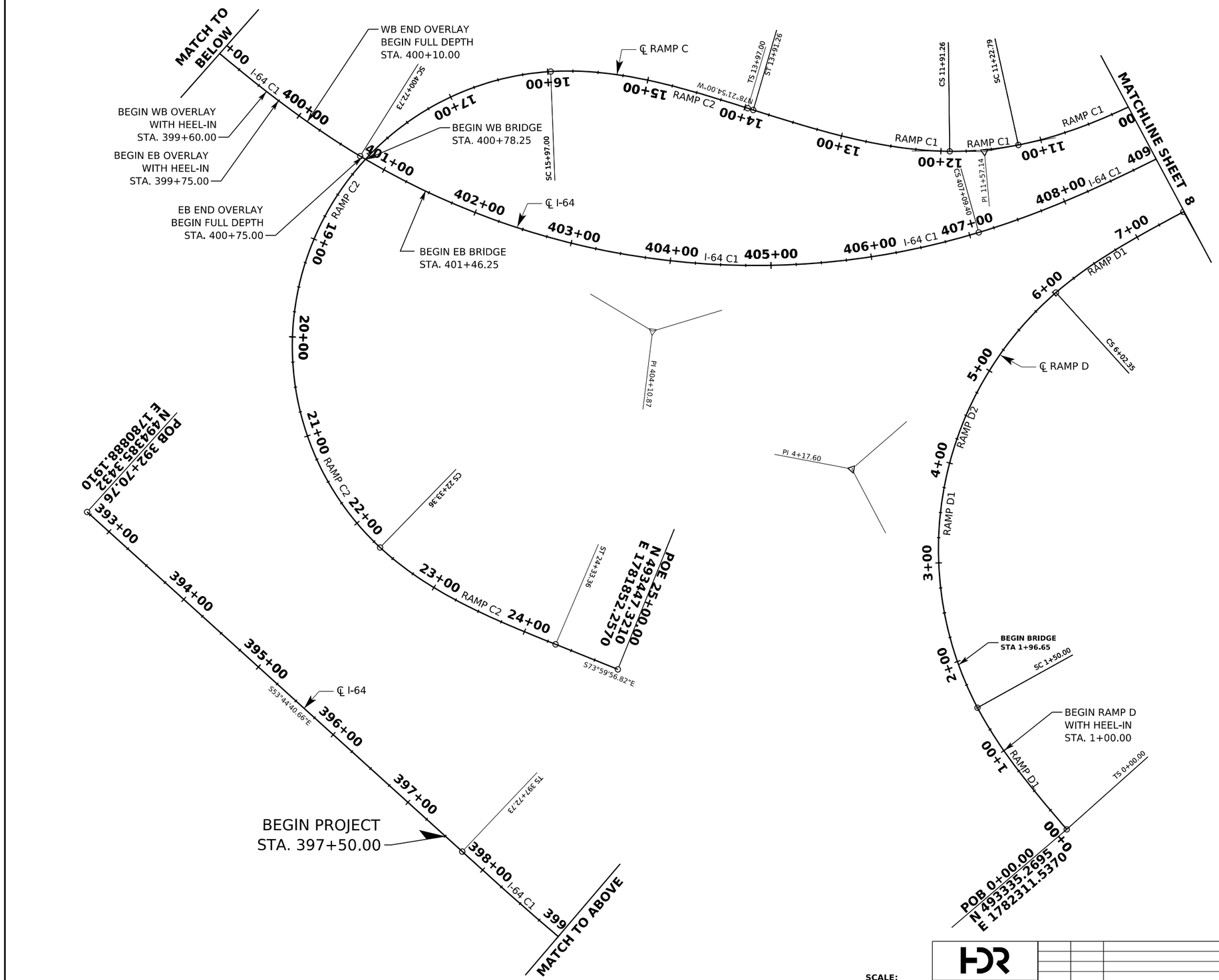

I-64 CURVE 1

*PI	=404+63.47
*N	=493679.9925
*E	=1781849.9788
PI	=404+10.87
N	=493784.6101
E	=1781851.9844
*Δ	=70°15'02.13" (LT)
Δ	=47°45'01.74" (LT)
D	=07°30'00.13"
R	=763.94'
L	=636.67'
T	=338.14'
Ls	=300.00'
Øs	=11°15'00.20"
Es	=176.13'
P	=4.90
K	=149.81
Xs	=298.85
Ys	=19.58
LT	=200.41'
ST	=100.37'
LC	=299.49'
SE	=8.0%
TS	=397+72.73
SC	=400+72.73
CS	=407+09.40
ST	=410+09.40

RAMP C
CURVE 1

*PI	=11+66.38
*N	=493964.1591
*E	=1782167.4660
PI	=11+57.14
N	=493995.7694
E	=1782161.2156
*Δ	=45°38'24.00" (RT)
Δ	=11°38'22.55" (RT)
D	=17°00'00.73"
R	=337.03'
L	=68.47'
T	=243.59'
Ls	=200.00'
Øs	=17°00'00.73"
Es	=33.97'
P	=4.93
K	=99.71
Xs	=198.25
Ys	=19.66
LT	=133.95'
ST	=67.23'
LC	=199.22'
SE	=7.5%
TS	=9+22.79
SC	=11+22.79
CS	=11+91.26
ST	=13+91.26

RAMP C
CURVE 2

*PI	=88+13.82
*N	=495510.2406
*E	=1774658.8337
PI	=22+34.11
N	=493926.8663
E	=1781096.4759
*Δ	=175°38'02.82" (LT)
Δ	=133°38'04.46" (LT)
D	=20°59'59.18"
R	=272.84'
L	=636.36'
T	=7416.82'
Ls	=200.00'
Øs	=20°59'59.18"
Es	=7049.74'
P	=6.08
K	=99.55
Xs	=197.33
Ys	=24.20
LT	=134.28'
ST	=67.53'
LC	=198.81'
SE	=6.0%
TS	=13+97.00
SC	=15+97.00
CS	=22+33.36
ST	=24+33.36

RAMP D
CURVE 1

*PI	=4+97.51
*N	=493678.5997
*E	=1781951.6217
PI	=4+17.60
N	=493669.2417
E	=1782063.1788
*Δ	=102°24'00.00" (RT)
Δ	=76°53'58.91" (RT)
D	=17°00'00.73"
R	=337.03'
L	=452.35'
T	=497.51'
Ls	=150.00'
Øs	=12°45'00.54"
Es	=205.27'
P	=2.78
K	=74.88
Xs	=149.67
Ys	=11.09
LT	=100.26'
ST	=50.24'
LC	=149.67'
SE	=6.0%
TS	=0+00.00
SC	=1+50.00
CS	=6+02.35
ST	=7+52.35

SCALE:
0 50 ft.

HDR ENGINEERING INC.
CHARLESTON, WV
681-341-6100

REVISION NUMBER	SHEET NUMBER	REVISION	DATE	BY

THE WEST VIRGINIA DEPARTMENT OF TRANSPORTATION
DIVISION OF HIGHWAYS

GEOMETRIC LAYOUT

J04C23C03-PLAN

Public Roads Div.	State Dist. No.	State Project No.	Federal Project No.	County	Sheet No.	Total Sheets
W.V.	1	S320 -64- 57.44 00	NHPP-0064 (497)D	KANAWHA	8	108

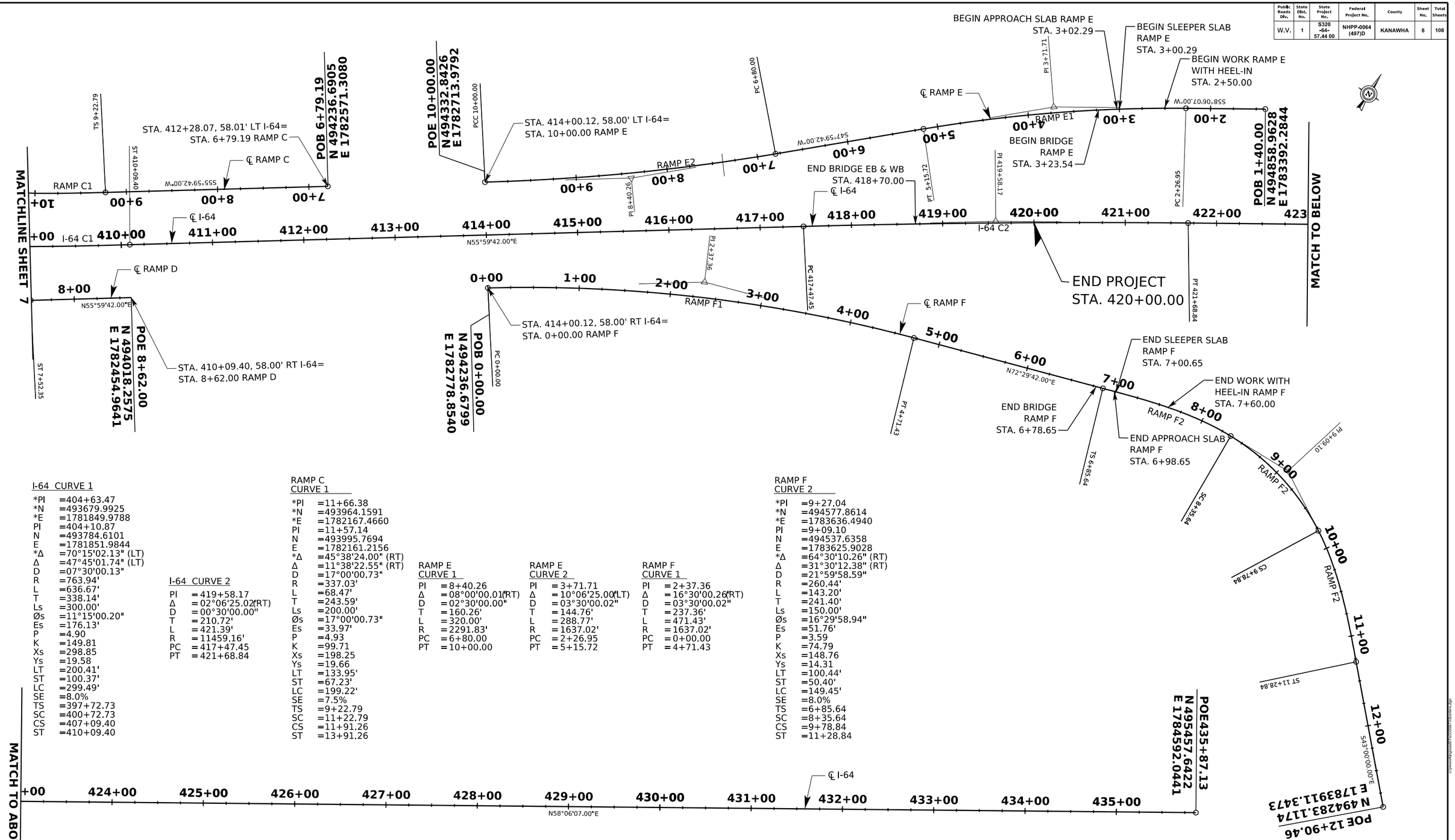

I-64 CURVE 1

*PI	=404+63.47
*N	=493679.9925
*E	=1781849.9788
PI	=404+10.87
N	=493784.6101
E	=1781851.9844
*Δ	=70°15'02.13" (LT)
Δ	=47°45'01.74" (LT)
D	=07°30'00.13"
R	=763.94'
L	=636.67'
T	=338.14'
Ls	=300.00'
Øs	=11°15'00.20"
Es	=176.13'
P	=4.90
K	=149.81
Xs	=298.85
Ys	=19.58
LT	=200.41'
ST	=100.37'
LC	=299.49'
SE	=8.0%
TS	=397+72.73
SC	=400+72.73
CS	=407+09.40
ST	=410+09.40

I-64 CURVE 2

PI	=419+58.17
Δ	=02°06'25.02" (RT)
D	=00°30'00.00"
T	=210.72'
L	=421.39'
R	=11459.16'
PC	=417+47.45
PT	=421+68.84

RAMP C CURVE 1

*PI	=11+66.38
*N	=493964.1591
*E	=1782167.4660
PI	=11+57.14
N	=493995.7694
E	=1782161.2156
*Δ	=45°38'24.00" (RT)
Δ	=11°38'22.55" (RT)
D	=17°00'00.73"
R	=337.03'
L	=68.47'
T	=243.59'
Ls	=200.00'
Øs	=17°00'00.73"
Es	=33.97'
P	=4.93
K	=99.71
Xs	=198.25
Ys	=19.66
LT	=133.95'
ST	=67.23'
LC	=199.22'
SE	=7.5%
TS	=9+22.79
SC	=11+22.79
CS	=11+91.26
ST	=13+91.26

RAMP E CURVE 1

PI	=8+40.26
Δ	=08°00'00.01" (RT)
D	=02°30'00.00"
T	=160.26'
L	=320.00'
R	=2291.83'
PC	=6+80.00
PT	=10+00.00

RAMP E CURVE 2

PI	=3+71.71
Δ	=10°06'25.00" (LT)
D	=03°30'00.02"
T	=144.76'
L	=288.77'
R	=1637.02'
PC	=2+26.95
PT	=5+15.72

RAMP F CURVE 1

PI	=2+37.36
Δ	=16°30'00.26" (RT)
D	=03°30'00.02"
T	=237.36'
L	=471.43'
R	=1637.02'
PC	=0+00.00
PT	=4+71.43

RAMP F CURVE 2

*PI	=9+27.04
*N	=494577.8614
*E	=1783636.4940
PI	=9+09.10
N	=494537.6358
E	=1783625.9028
*Δ	=64°30'10.26" (RT)
Δ	=31°30'12.38" (RT)
D	=21°59'58.59"
R	=260.44'
L	=143.20'
T	=241.40'
Ls	=150.00'
Øs	=16°29'58.94"
Es	=51.76'
P	=3.59
K	=74.79
Xs	=148.76
Ys	=14.31
LT	=100.44'
ST	=50.40'
LC	=149.45'
SE	=8.0%
TS	=6+85.64
SC	=8+35.64
CS	=9+78.84
ST	=11+28.84

SCALE:
0 50 ft.

HDR ENGINEERING INC.
CHARLESTON, WV
681-341-6100

REVISION NUMBER	SHEET NUMBER	REVISION	DATE	BY

THE WEST VIRGINIA DEPARTMENT OF TRANSPORTATION
DIVISION OF HIGHWAYS

GEOMETRIC LAYOUT

J04C23C03-PLAN

Public Roads Div.	State Dist. No.	State Project No.	Federal Project No.	County	Sheet No.	Total Sheets
W.V.	1	S320 -64- 57,44 00	NHPP-0064 (497)D	KANAWHA	9	108

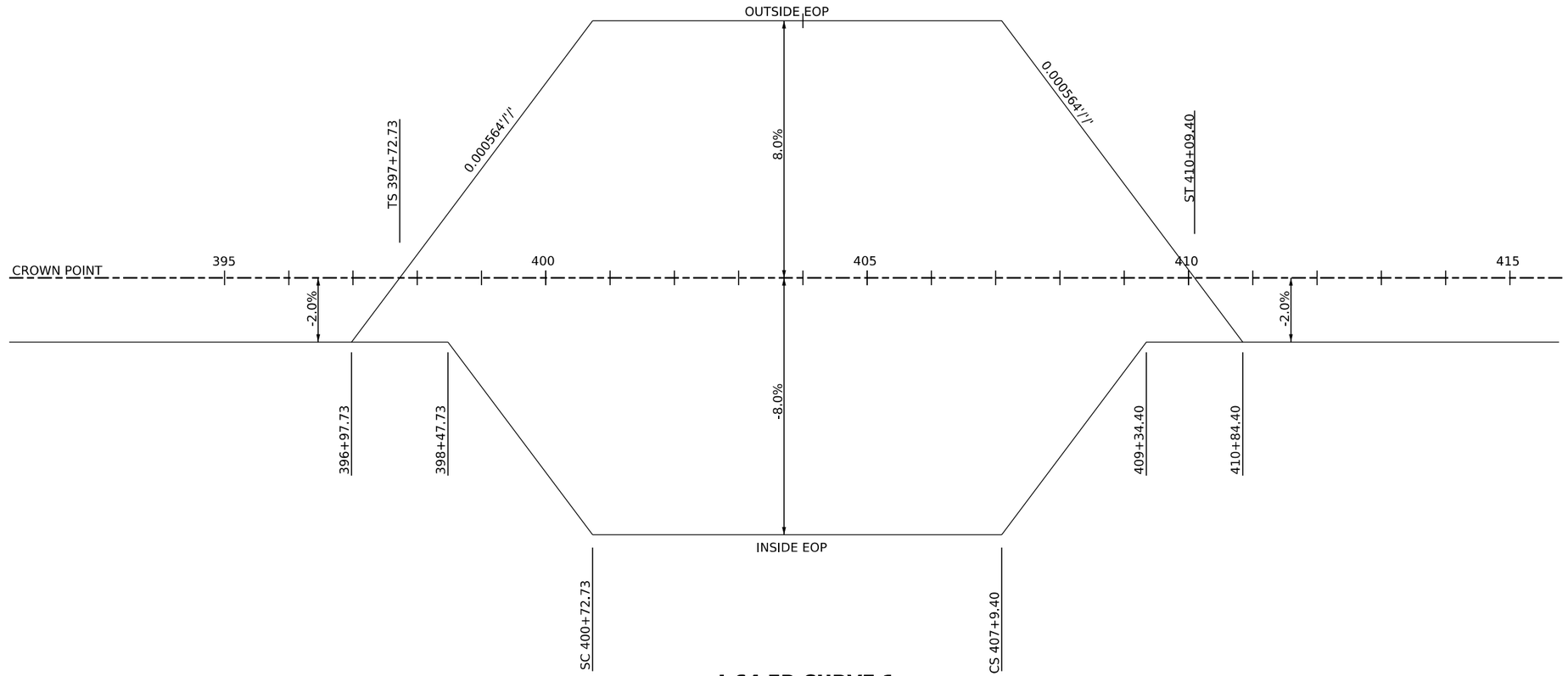

I-64 EB CURVE 1

HDR ENGINEERING INC.
CHARLESTON, WV
681-341-6100

REVISION NUMBER	SHEET NUMBER	REVISION	DATE	BY

THE WEST VIRGINIA DEPARTMENT OF TRANSPORTATION
DIVISION OF HIGHWAYS

SUPERELEVATION DIAGRAM

J04C23C03-NOTES

c:\pwworking\jcasto\d1033053\jcastoe.dgn

jcasto3d

Public Roads Div.	State Dist. No.	State Project No.	Federal Project No.	County	Sheet No.	Total Sheets
W.V.	1	S320 -64- 57,44 00	NHPP-0064 (497)D	KANAWHA	10	108

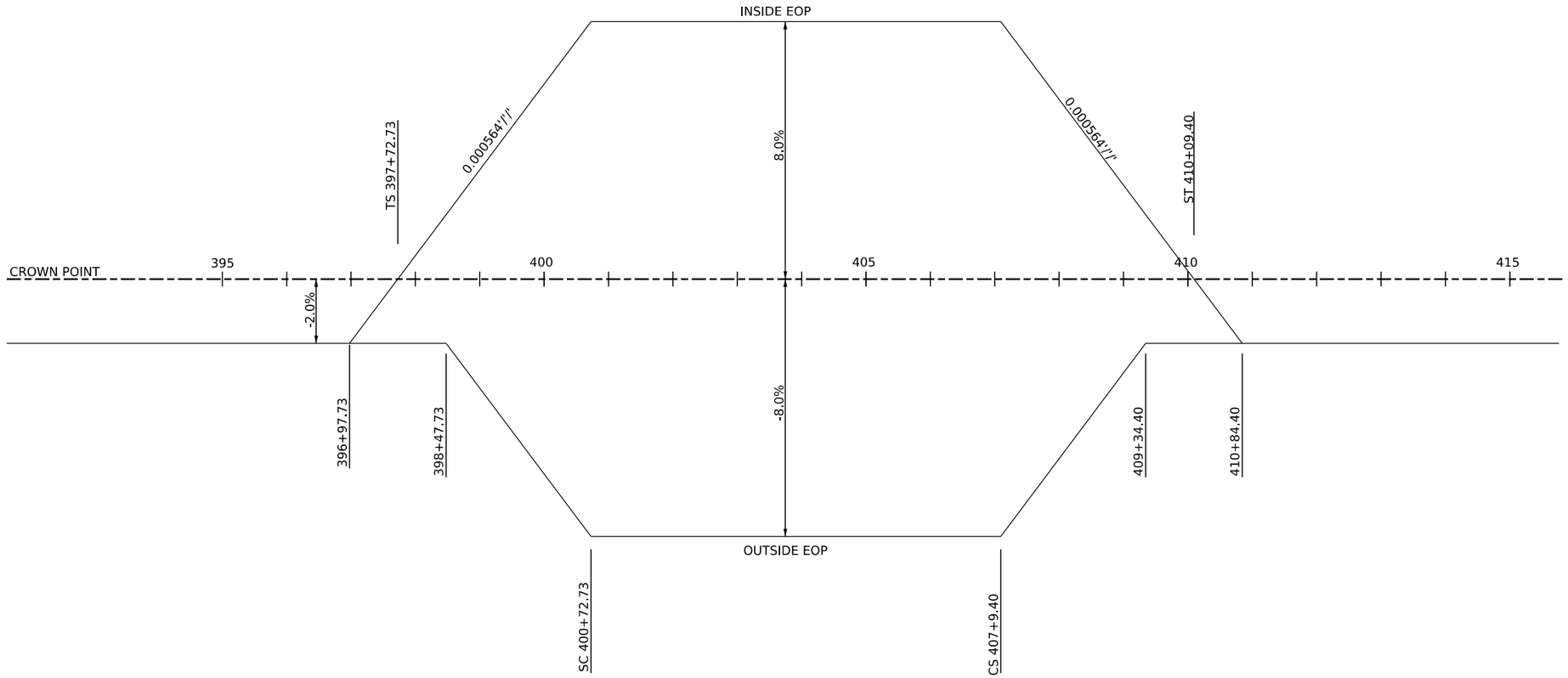

I-64 WB CURVE 1

HDR ENGINEERING INC.
CHARLESTON, WV
681-341-6100

REVISION NUMBER	SHEET NUMBER	REVISION	DATE	BY

THE WEST VIRGINIA DEPARTMENT OF TRANSPORTATION
DIVISION OF HIGHWAYS

SUPERELEVATION DIAGRAM

J04C23C03-NOTES

Public Roads Div.	State Dist. No.	State Project No.	Federal Project No.	County	Sheet No.	Total Sheets
W.V.	1	S320 -64- 57.44 00	NHPP-0064 (497)D	KANAWHA	11	108

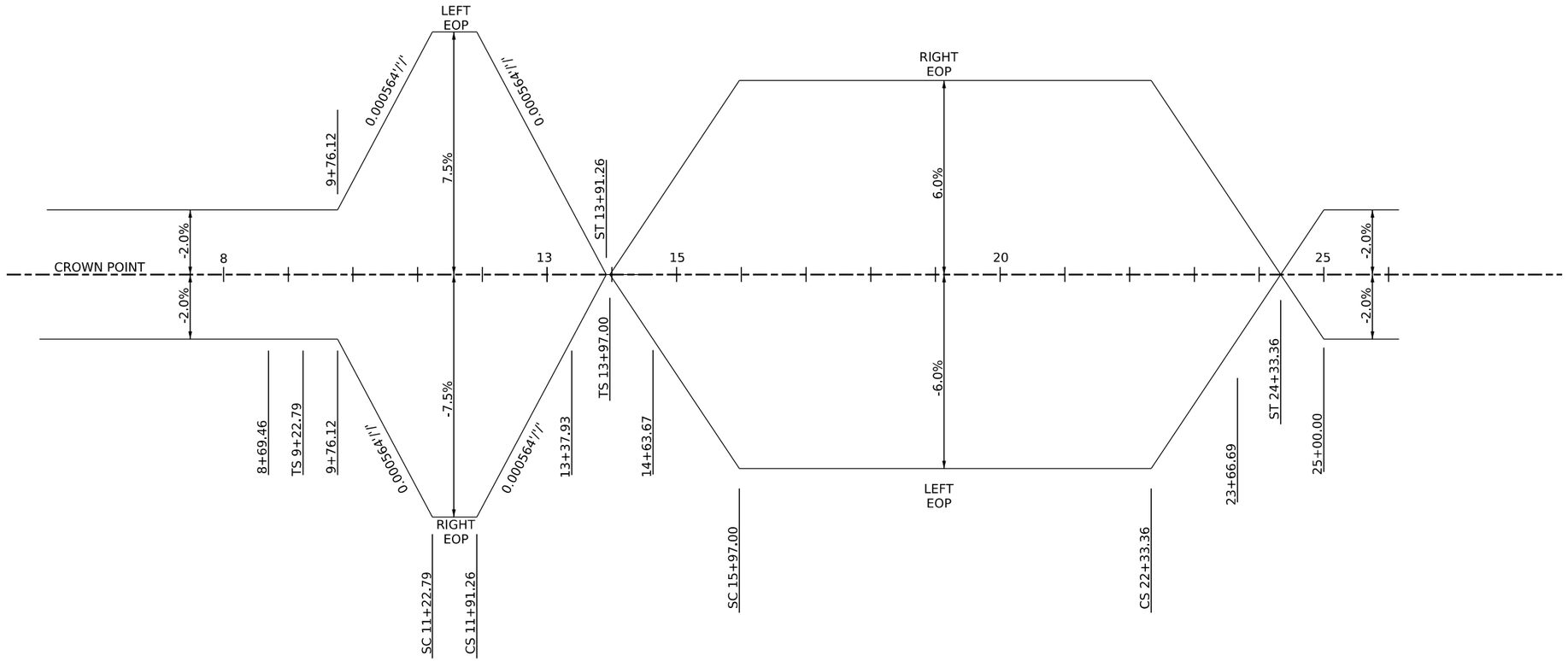

RAMP C CURVE 1

RAMP C CURVE 2

HDR ENGINEERING INC.
CHARLESTON, WV
681-341-6100

REVISION NUMBER	SHEET NUMBER	REVISION	DATE	BY

THE WEST VIRGINIA DEPARTMENT OF TRANSPORTATION
DIVISION OF HIGHWAYS

SUPERELEVATION DIAGRAM

J04C23C03-NOTES

c:\users\dfq\appdata\local\temp\acpublish_2808\ac3d.dwg

Public Roads Div.	State Dist. No.	State Project No.	Federal Project No.	County	Sheet No.	Total Sheets
W.V.	1	S320 -64- 57,44 00	NHPP-0064 (497)D	KANAWHA	12	108

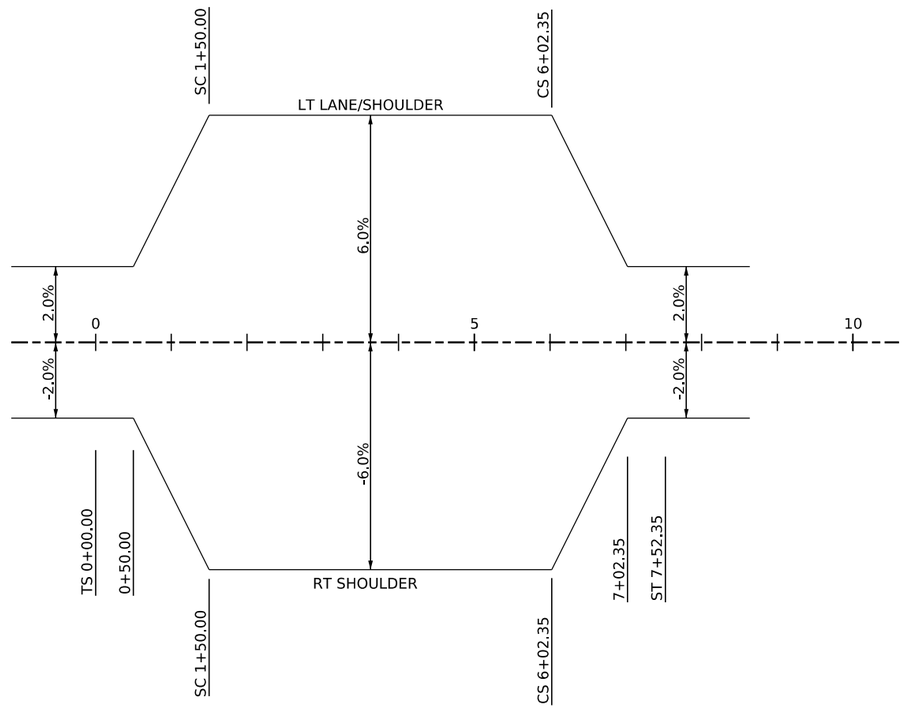

RAMP D CURVE 1

HDR ENGINEERING INC.
CHARLESTON, WV
681-341-6100

REVISION NUMBER	SHEET NUMBER	REVISION	DATE	BY

THE WEST VIRGINIA DEPARTMENT OF TRANSPORTATION
DIVISION OF HIGHWAYS

SUPERELEVATION DIAGRAM

J04C23C03-NOTES

Public Roads Div.	State Dist. No.	State Project No.	Federal Project No.	County	Sheet No.	Total Sheets
W.V.	1	S320 -64- 57,44 00	NHPP-0064 (497)D	KANAWHA	13	108

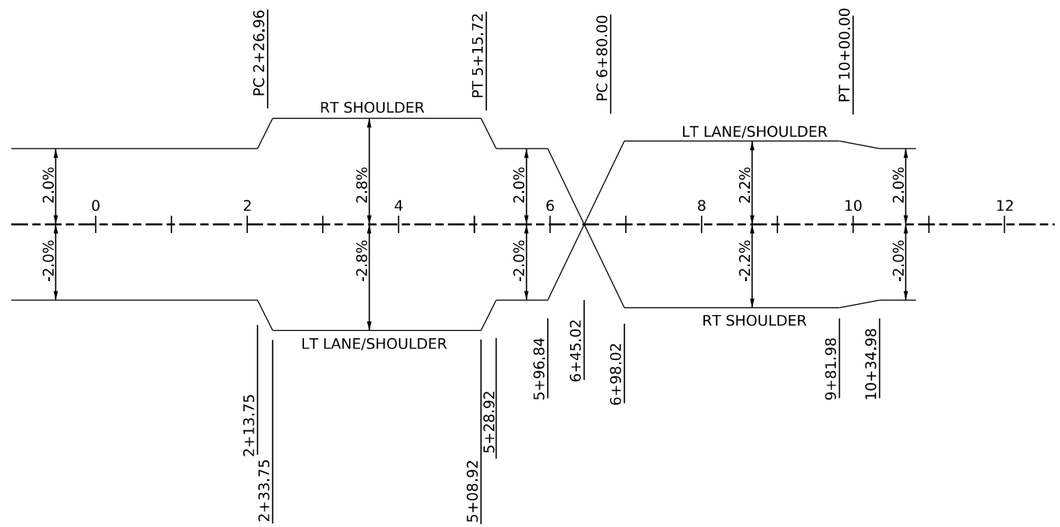

RAMP E CURVE 1

RAMP E CURVE 2

HDR ENGINEERING INC.
CHARLESTON, WV
681-341-6100

REVISION NUMBER	SHEET NUMBER	REVISION	DATE	BY

THE WEST VIRGINIA DEPARTMENT OF TRANSPORTATION
DIVISION OF HIGHWAYS

SUPERELEVATION DIAGRAM

J04C23C03-NOTES

Public Roads Div.	State Dist. No.	State Project No.	Federal Project No.	County	Sheet No.	Total Sheets
W.V.	1	S320 -64- 57,44 00	NHPP-0064 (497)D	KANAWHA	14	108

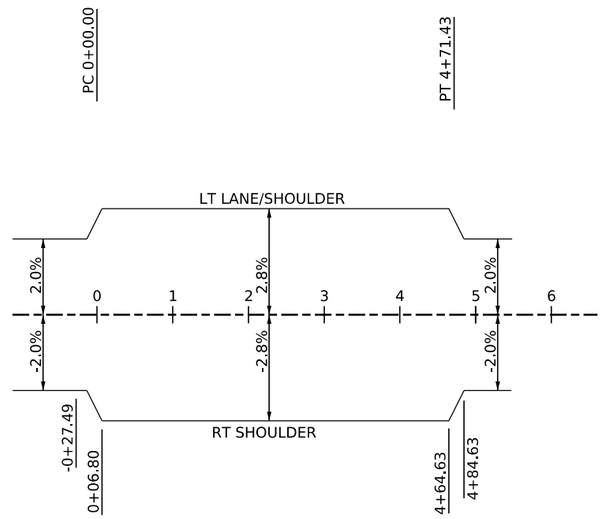

RAMP F CURVE 1

HDR ENGINEERING INC.
CHARLESTON, WV
681-341-6100

REVISION NUMBER	SHEET NUMBER	REVISION	DATE	BY

THE WEST VIRGINIA DEPARTMENT OF TRANSPORTATION
DIVISION OF HIGHWAYS

SUPERELEVATION DIAGRAM

J04C23C03-NOTES

c:\pwworking\jcasto1\d1035087\Broders.dgn

Jcasto1

Public Roads Div.	State Dist. No.	State Project No.	Federal Project No.	County	Sheet No.	Total Sheets
W.V.	01	S320 -64- 57.44 00	NHPP-0064 (497)D	KANAWHA	XX	XX

TEMPORARY TRAFFIC CONTROL SUMMARY OF QUANTITIES

ITEM NO.	DESCRIPTION	QUANTITIES UNIT	TOTAL
636002-001	AGGREGATE FOR MAINTAINING TRAFFIC, STONE OR GRAVEL	TN	-
636002-002	AGGREGATE FOR MAINTAINING TRAFFIC, SLAG	TN	-
636003-001	BITUMINOUS MATERIAL FOR DUST PALLIATIVE	GA	-
636005-001	TEMPORARY STRUCTURE FOR MAINTAINING TRAFFIC, DECK REPAIR	LS	-
636006-001	PILOT TRUCK AND DRIVER	DA	-
636007-002	ERADICATION OF PAVEMENT MARKINGS	SF	-
636008-002	TEMPORARY PAVEMENT MARKING-PAINT 6-IN	LF	-
636009-002	TEMPORARY PAVEMENT MARKING-TAPE 6-IN, TYPE VII B	LF	-
636009-002	TEMPORARY PAVEMENT MARKING-TAPE 6-IN, TYPE VII C	LF	-
636010-003	TEMPORARY RAISED PAVEMENT MARKER, TYPE - C-8	EA	-
636011-001	TRAFFIC CONTROL DEVICE	UN	-
636012-010	PROJECT TRAFFIC CONTROL DEVICE CLEANING	EA	-
636013-001	INDIVIDUAL TRAFFIC CONTROL DEVICE CLEANING	EA	-
636014-001	FLAGGER	HR	-
636014-002	TRAFFIC DIRECTOR	HR	-
636017-001	TEMPORARY BARRIER, <INSERT TL - # PER DD-688> , <INSERT SUPPLEMENTAL DESCRIPTION FOR DEFLECTION CRITERIA PER DD-688>	LF	-
636017-006	TEMPORARY BARRIER, STRUCTURE MOUNTED	LF	-
636018-003	REMOVE AND RESET TEMPORARY BARRIER	LF	-
636018-006	REMOVE AND RESET STRUCTURE MOUNTED BARRIER	LF	-
636019-001	TEMPORARY GUARDRAIL BARRIER	LF	-
636020-001	REMOVE AND RESET TEMPORARY GUARDRAIL BARRIER	LF	-
636021-001	ELECTRIC ARROW	DA	-
636022-001	CHANGEABLE MESSAGE SIGN	DA	-
636023-003	TEMPORARY TRAFFIC SIGNAL, PORTABLE	MO	-
636023-003	TEMPORARY TRAFFIC SIGNALS, MOFICATION TO PERMANENT TRAFFIC SIGNALS	LS	-
636024-001	TEMPORARY PIPE FOR MAINTAINING TRAFFIC	LF	-
636025-001	WARNING LIGHTS, TYPE A	DA	-
636025-001	WARNING LIGHTS, TYPE B	DA	-
636025-001	WARNING LIGHTS, TYPE C	DA	-
636026-001	TEMPORARY LIGHTING	LS	-
636028-002	SHADOW VEHICLE	MO	-
636029-001	ROADSIDE ASSISTANCE SERVICE	MO	-
636030-001	SPEED MONITORING TRAILER	DA	-
636035-001	TEMPORARY CCTV, 01	MO	-
636050-001	ROLLING ROAD BLOCK	HR	-
636060-002	REMOVE AND RESET ATTENUATOR DEVICE	EA	-
636060-015	TEMPORARY IMPACT ATTENUATING DEVICE, C-1, TL-2	EA	-
636060-020	TEMPORARY IMPACT ATTENUATING DEVICE, C-1, TL-3	EA	-
636060-021	TEMPORARY IMPACT ATTENUATING DEVICE, C-3, TL-2	EA	-
636060-025	TEMPORARY IMPACT ATTENUATING DEVICE, C-3, TL-3	EA	-
637001-001	WATER FOR DUST PALLIATIVE	MG	-
661001-001	0.080 IN FLAT SHEET SIGN	SF	-
664006-010	GLARE BARRIER, TYPE V	LF	-

TEMPORARY TRAFFIC CONTROL DEVICES RATE SCHEDULE

DEVICE	DESCRIPTION	VALUES IN UNITS	QUANTITIES	TOTAL UNITS
1	SIGNS ON PORTABLE MOUNTS AND BARRICADES (TOTAL SIGN AREA 16 SQ. FT. OR GREATER)	170		
2	SIGNS ON PORTABLE MOUNTS AND BARRICADES (TOTAL SIGN AREA LESS THAN 16 SQ. FT.)	80		
3	SIGNS ON PERMANENT POSTS (TOTAL SIGN AREA 16 SQ. FT. OR GREATER)	180		
4	SIGNS ON PERMANENT POSTS (TOTAL SIGN AREA LESS THAN 16 SQ. FT.)	90		
5	BARRICADES - TYPE I	35		
6	BARRICADES - TYPE II	60		
7	BARRICADES - TYPE III	90		
8	DRUMS	60		
9	CONES	5		
10	VERTICAL PANEL OR GROUND MOUNTED DELINEATORS	10		
11	BARRIER OR GUARDRAIL MOUNTED DELINEATORS (BID INCIDENTAL TO BARRIER OR GUARDRAIL)	0		
12	CHANNELIZER CONES	40		
13	OVERSIZE SIGNS (INCLUDES FINES DOUBLED SIGNS AND GIVE 'EM A BRAKE SIGNS)	300		
14	OVERSIZE SIGNS (INCLUDES PROJECT FUNDING SOURCE SIGNS)	180		
			TOTAL:	

1. ORANGE SIGN SHEETING SHALL BE REFLECTIVE FLUORESCENT ORANGE, TYPE ASTM-VI (ROLL-UP) OR TYPE ASTM-XI (RIGID). ALL OTHERS SHALL BE TYPE ASTM-IV UNLESS FY OR FYG. ANY FY OR FYG SHALL BE ASTM-XI.
2. DRUM AND CHANNELIZER CONE SHEETING TO BE SIX (6) INCH, TYPE ASTM-IV.
3. BARRICADE AND CONE SHEETING SHALL BE ASTM-IV.
4. ONLY DEVICES AND DELINEATORS ON THE APPROVED PRODUCTS LIST SHALL BE PERMITTED.

TEMPORARY TRAFFIC CONTROL GENERAL NOTES

1. TEMPORARY TRAFFIC CONTROL SHALL BE IN ACCORDANCE WITH SECTION 636 OF THE WEST VIRGINIA DEPARTMENT OF TRANSPORTATION, DIVISION OF HIGHWAYS, STANDARD SPECIFICATIONS ROADS AND BRIDGES, ADOPTED 2023, AS AMENDED BY THE WEST VIRGINIA DEPARTMENT OF TRANSPORTATION, DIVISION OF HIGHWAYS, SUPPLEMENTAL SPECIFICATIONS, DATED JANUARY 2025, AND THE "MANUAL ON TEMPORARY TRAFFIC CONTROL FOR STREETS AND HIGHWAYS", 2006 EDITION, WHICH ARE MADE A PART OF THIS CONTRACT AND THE TRAFFIC CONTROL PLAN FOR INDIVIDUAL SEGMENTS AS DESCRIBED IN THESE PLANS.

2. REFLECTIVE SHEETING ON TEMPORARY TRAFFIC CONTROL DEVICES SHALL BE OF NEW CONDITION AT THE BEGINNING OF THE PROJECT LIFE. ALL WARNING SIGNS SHALL HAVE THE MINIMUM DIMENSIONS OF 48"x48" UNLESS OTHERWISE NOTED. SIGN SIZES AND COLORS ARE SHOWN IN THE WEST VIRGINIA DIVISION OF HIGHWAYS SIGN FABRICATION MANUAL. NIGHT VISIBILITY AND LEGIBILITY SHALL BE MAINTAINED AT ALL TIMES.

3. NOTICE TO CONTRACTORS - OTHER CONTRACTORS MAY BE WORKING IN THIS AREA, AND IT IS IMPERATIVE THAT STRICT COORDINATION BETWEEN CONTRACTORS BE AGREED ON IN REFERENCE TO WORKING PLANS, STORAGE AREAS AND LANE CLOSURES. THIS PLAN OF COORDINATION SHALL BE PRESENTED TO THE ENGINEER IN WRITING FOR HIS APPROVAL.

4. COORDINATION WITH MEDIA & CITY OF CHARLESTON

   BEFORE THE CONTRACTOR PROCEEDS WITH ANY WORK AND BEFORE CHANGING PHASES (OR SUB- PHASES), THE CONTRACTOR SHALL COORDINATE SUCH WITH THE DIVISION OF HIGHWAYS TO NOTIFY TELEVISION, RADIO, NEWSPAPERS, HOSPITALS, FIRE DEPARTMENTS, SCHOOLS, POLICE, EMERGENCY VEHICLES, WV TRANSPORTATION MANAGEMENT CENTER, ETC. AS APPROPRIATE.

5. CHANGEABLE MESSAGE SIGNS

   THERE SHALL BE <INSERT #> CHANGEABLE MESSAGE SIGNS INCLUDED IN THIS PROJECT INSTALLED AS LEAD-INS ALONG BOTH DIRECTIONS OF THIS PROJECT. ALL CMS SHALL HAVE FIVE (5) DRUMS UPSTREAM TO DELINEATE THE CMS. INSTALL SIGNS TEN (10) DAYS PRIOR TO WORK.CONTRACTOR SHALL COORDINATE WITH THE WV DEPARTMENT OF TRANSPORTATION FOR LOCATION OF CHANGEABLE MESSAGE SIGN. CONTACT THE WVDOH DISTRICT TRAFFIC ENGINEER FOR MESSAGE.

6. EXISTING SIGNS AND DELINEATORS - ANY SUCH EXISTING FACILITIES RELOCATED,REMOVED, OR DAMAGED BY THE CONTRACTOR SHALL BE REPLACED TO ITS ORIGINAL CONDITION BY THE CONTRACTOR AT HIS EXPENSE AS PART OF ITEM 636011-001,TRAFFIC CONTROL DEVICE (OTHER THAN THOSE REPLACED BY THE FINAL SIGNING).

7. LOCATIONS OF ALL TRAFFIC CONTROL DEVICES SHOWN ON THE TTCP ARE APPROXIMATE. FINAL LOCATION OF THE TRAFFIC CONTROL DEVICES ARE TO BE ESTABLISHED IN THE FIELD BY THE ENGINEER. LOCATIONS OF CMS SIGNS AND SPEED MONITORING TRAILERS, WITH THE APPROVAL OF THE ENGINEER, AS NEEDED TO BETTER SHIELD THE DEVICES FROM IMPACT WHEN POSSIBLE PER SPECIFICATION 636.19.4. WHEN SUCH DEVICES IN LOCATIONS NOT ADEQUATELY SHIELDED WILL NOT BE NEEDED FOR AN EXTENDED PERIOD OF TIME, THEY SHALL BE RELOCATED AS REQUIRED IN SPECIFICATION 636.19.4.

8. WARNING LIGHTS

   TYPE 'B' WARNING LIGHTS SHALL BE PLACED ON THE FIRST TWO ADVANCED WARNING SIGNS AND ALL WORK ZONE SPEED LIMIT SIGNS ALONG EACH DIRECTION OF THIS PROJECT. TYPE 'C' WARNING LIGHTS SHALL BE PLACED ON ANY BARRICADES.

   ALL WARNING LIGHTS SHALL BE BID AS ITEM 636025-001.

9. CONTRACTOR MAY REVISE CONSTRUCTION SEQUENCE WITH WRITTEN APPROVAL BY THE PROJECT ENGINEER. SUCH REVISIONS TO THE SEQUENCE SHALL BE SUBMITTED TO THE ENGINEER FOR REVIEW AND APPROVAL AT LEAST 14 DAYS IN ADVANCE OF THE BEGINNING OF THE WORK IN THE AFFECTED AREA. THIS REVISION SHOULD INCLUDE, BUT NOT LIMITED TO, TRAFFIC CONTROL DEVICES, TEMPORARY PAVEMENT MARKINGS, AS PART OF SUGGESTED SEQUENCE.

10. WINTER SHUTDOWN

    THE CONTRACTOR SHALL PROVIDE THE DIVISION WITH A SCHEME THAT ENSURES THAT ALL LANES, SHOULDERS, SIDE ROADS, ETC. ARE FREE FLOWING AND NONRESTRICTED, EASILY TRAVERSABLE AND ALLOW SAFE TRAVEL. SUCH A SCHEME SHALL BE APPROVED IN WRITING BY THE ENGINEER.COSTS OF IMPLEMENTING THE WINTER SHUTDOWN SHALL BE BID INCIDENTAL TO ITEM636011-001, TRAFFIC CONTROL DEVICE.

11. WHEN COVERING EXISTING SIGNS, THE CONTRACTOR HAS THE OPTION OF USING:

    A. HEAVY DUTY BLACK OVERLAY (PLASTIC OR BURLAP)

    B. THIN WOOD OVERLAY (E.G. PLYWOOD).

    C. TAKING SIGNS DOWN AND REINSTALLING WHEN APPROPRIATE.

12. ALL COVERINGS MUST PROVIDE 100% COVERAGE OF THE SIGN. NO ADHESIVE TAPE IS TO BE APPLIED TO THE SIGN FACE. ANY DAMAGES CAUSED BY ABOVE-NAMED SHALL BE REPAIRED/REPLACED TO ORIGINAL CONDITION AT CONTRACTOR'S EXPENSE. ALL ABOVE OPERATIONS SHALL BE BID INCIDENTAL TO ITEM 636011-001, TRAFFIC CONTROL DEVICE.

13. WHEN REOPENING TO TRAFFIC, ALL SIGNING PERTAINING TO ROAD WORK AND/OR LANE CLOSURES SHALL BE COVERED, TURNED, OR REMOVED AS DESCRIBED IN SPECIFICATION 636.3.

14. PRIOR TO REOPENING A LANE THAT HAS BEEN CLOSED, ALL TEMPORARY PAVEMENT MARKINGS SHALL BE IN PLACE AND APPROVED BY THE ENGINEER.

15. ACCESS TO ALL SCHOOLS, HOUSES, SIDE ROADS AND BUSINESSES SHALL BE MAINTAINED AT ALL TIMES.

    FLAGGER

16. FLAGGER HOURS HAVE BEEN INCLUDED IN THE TEMPORARY TRAFFIC CONTROL QUANTITIES AS NEEDED THROUGHOUT THE DURATION OF THE PROJECT. THIS SHALL INCLUDE THE COST OF FURNISHING, MAINTAINING, FLAGGING DURING NIGHTTIME HOURS WITH FLAGGER STATIONS ADEQUATELY ILLUMINATED, AND MOVING OF THE "ADVANCE FLAGGER" SIGNS ALONG WITH THE ACTUAL FLAGGING OF TRAFFIC AND BID UNDER ITEM 636014-001, FLAGGER.

17. THE CONTRACTOR SHALL COORDINATE DYNAMIC MESSAGE SIGN NOTICES WITH WVDOH TRANSPORTATION MANAGEMENT CENTER (TMC) SUPERVISOR: JIM LAMBERT AT 304-414-7348 (OFFICE), 304-543-7554 (CELL). MESSAGING SHALL BE DISPLAYED SEVEN (7) DAYS PRIOR TO CLOSURES OR DETOURS.

    THE CONTRACTOR MUST RESTORE ANY PAVED, LANDSCAPED, CURBED, AND SIDEWALK AREAS DISTURBED DURING CONSTRUCTION ACTIVITIES TO ITS ORIGINAL CONDITION AND TO THE SATISFACTION OF THE ENGINEER. NO ADDITIONAL COMPENSATION SHALL BE ALLOWED FOR THIS WORK.

18. WORK ZONE TEMPORARY TRAFFIC CONTROL SUPERVISOR

    THE CONTRACTOR SHALL PROVIDE A CONTACT TO BE ON CALL 7 DAYS A WEEK, 24 HOURS A DAY, IN THE EVENT OF A FAILURE OF THE TTC ITEMS, INCLUDING TRAFFIC SIGNALS. IN THE EVENT OF A MALFUNCTION, THE CONTRACTOR SHALL CONTROL TRAFFIC THROUGH THE WORK ZONE BY THE USE OF FLAGGERS, IF NECESSARY.

19. TEMPORARY BARRIER

    TEMPORARY BARRIER SHALL BE IN ACCORDANCE WITH THE REQUIREMENTS OF WVDOH DESIGN DIRECTIVE 688. ALL BRIDGE MOUNTED TEMPORARY BARRIER SHALL BE ANCHORED TO THE BRIDGE DECK. CONTRACTOR IS RESPONSIBLE FOR THE DESIGN OF THE PROPOSED BARRIER AND ANCHORAGE, AND SHALL SUBMIT THE DESIGN TO THE DEPARTMENT, SIGNED AND SEALED BY A REGISTERED PROFESSIONAL ENGINEER IN WEST VIRGINIA, PRIOR TO INSTALLATION.

20. TEMPORARY IMPACT ATTENUATING DEVICE

    CONTRACTOR SHALL INSTALL TEMPORARY IMPACT ATTENUATING DEVICES PER MANUFACTURER'S RECOMMENDATION AS SPECIFIED UNDER SPECIFICATION 636.12.

21. EXISTING BRIDGE MOUNTED SIGNS

    THE EXISTING BRIDGE MOUNTED SIGNS TO BE REMOVED DURING CONSTRUCTION SHALL BE INSTALLED ON APPROPRIATE TEMPORARY SUPPORTS AND FOUNDATIONS AS PER THE STANDARD DETAILS, VOLUME II DATED JANUARY 2019. THESE SIGNS MAY REQUIRE BREAKWAY SUPPORTS WITH FOUNDATIONS. AFTER COMPLETION OF CONSTRUCTION, THE CONTRACTOR SHALL REMOVE THE SIGNS, SUPPORTS, AND FOUNDATIONS TO 12" BELOW THE GROUND AND RESTORE THE GROUND TO MATCH SURROUNDING CONDITIONS. THESE SUPPORTS, FOUNDATIONS, AND REMOVAL AFTER CONSTRUCTION SHALL BE BID AS PART OF ITEM 661001-001, 0.080 FLAT SHEET SIGN.

22. WORK ZONE SPEED LIMIT

    WORK ZONE - SPEED LIMIT XX MPH SHALL BE ADDED IN BETWEEN THE FIRST TWO WARNING SIGNS ALONG BOTH DIRECTIONS OF THIS PROJECT. EACH SIGN SHALL HAVE TWO (2) TYPE ‘B’ WARNING LIGHTS.

23. ELECTRIC ARROWS

    ALL ELECTRIC ARROWS SHALL HAVE A MINIMUM 1000 FT SIGHT DISTANCE. FIVE (5) DRUMS SHALL BE INSTALLED UPSTREAM OF THE ELECTRIC ARROW TO DELINEATE THE DEVICE.

24. SPEED MONITORING TRAILERS

    SPEED MONITORING TRAILERS SHALL BE ADDED AT THE BEGINNING OF THE WORK ZONE ALONG BOTH DIRECTIONS OF THIS PROJECT. FIVE (5) DRUMS SHALL BE INSTALLED UPSTREAM OF THE SPEED MONITORING TRAILER TO DELINEATE THE DEVICE.

25. SHADOW VEHICLE

    A SHADOW VEHICLE SHALL BE USED DURING EACH PHASE OF CONSTRUCTION FOR THE INSTALLATION AND REMOVAL OF TRAFFIC CONTROL DEVICES. THE SHADOW VEHICLE SHALL BE LOCATED A MINIMUM OF 150 FEET FROM THE WORKERS AND SHALL BE USED FOR NO OTHER PURPOSE THAN TO SUPPORT THE TRUCK MOUNTED ATTENUATOR. WHEN WORK IS COMPLETED FOR THE DAY THE SHADOW VEHICLE SHALL BE RELOCATED AS DESCRIBED IN SECTIONS 636.6.2 AND MAY BE USED FOR OTHER PURPOSES BY THE CONTRACTOR. THESE COSTS WILL BE PAID FOR UNDER ITEM 636028-002, SHADOW VEHICLE.

26. WORK HOUR RESTRICTIONS NOTE

    LANE CLOSURES IN WEST VIRGINIA ARE ONLY PERMITTED AS PER WVDOH LANE CLOSURE MAP - INSTERSTATES.
    www.transportation.wv.gov/highways/traffic/Documents/permitted-lane-closure.pdf

27. PENALTY NOTE

    A PENALTY IN THE AMOUNT OF $XX PER MINUTE OR ANY FRACTION THEREOF SHALL BE ASSESSED IF THE CONTRACTOR DOES NOT HAVE ALL LANES OF TRAFFIC OPEN OUTSIDE OF TIME FRAMES MENTIONED. THIS PENALTY SHALL BE APPLICABLE TO EACH LANE AND EACH DIRECTION.

28. EXISTING LIGHTING AND TRAFFIC SIGNALS

    CONTRACTOR IS HEREBY ADVISED THAT THERE ARE NUMEROUS LIGHTING AND TRAFFIC SIGNAL CONDUITS, CABLES AND FACILITIES IN THE AREA. ANY SUCH FACILITIES DAMAGED BY THE CONTRACTOR SHALL BE REPLACED AND/OR REPAIRED AT THE CONTRACTORS EXPENSE AND NO ADDITIONAL PAYMENT SHALL BE ALLOWED. BID AS PART OF 636011-001, TRAFFIC CONTROL DEVICE. (EXCEPTIONS: OTHER THAN THOSE FACILITIES MODIFIED/REPLACED AS CALLED FOR IN THE PLANS.) ANY ELECTRICAL REPAIRS NECESSARY SHALL CONFORM TO SECTIONS 659, 660, 660.9, 660.16, 715.42.13,662, 662.2.10.1 AND 662.2.10.1.1.

29. ERADICATION OF PAVEMENT MARKINGS

    THE PLANS DEPICT TEMPORARY PAVEMENT MARKINGS FOR EACH PHASE. THE CONTRACTOR SHALL ERADICATE ANY CONFLICTING PERMANENT MARKINGS NECESSARY TO ENSURE THE TEMPORARY MARKINGS ARE CLEAR WITHOUT CONFLICT. THE FULL (90%) REMOVAL LEVEL SHALL BE SUCH THAT THERE SHALL NOT BE ANY REMAINING SURFACE OF THE ORIGINAL PAINT FILM IN THE ERADICATED AREA. THIS SHALL BE DETERMINED BY THE ENGINEER BY COMPARISON WITH THE ERADICATION VISUAL STANDARD. THE REMAINING 10% OF THE EXISTING MARKINGS SHALL NOT BE MORE THAN THE TEXTURE OF THE PAVEMENT. BLACK OUT TAPE OR PAINT IS NOT AN ACCEPTABLE FORM OF ERADICATION. ERADICATION SHALL BE PERFORMED BY SUITABLE METHOD APPROVED BY THE ENGINEER ANY SURFACE OR TEXTURE DAMAGE TO THE PAVEMENT SHALL BE CORRECTED AT THE CONTRACTORS EXPENSE BID INCIDENTAL TO ITEM 636007-002 AND IN A MANNER APPROVED BY THE ENGINEER.

30. TEMPORARY SIGNALS

    A. CONTRACTOR SHALL BE RESPONSIBLE FOR ADJUSTING THE SIGNAL TIMING AND PHASING TO PROVIDE A PROGRESSIVE MOVEMENT OF TRAFFIC THROUGHOUT ALL PHASES OF WORK DURING THIS PROJECT. TIMING ADJUSTMENTS SHALL NOT IMPACT SIGNAL SYSTEM COORDINATION. CONTACT THE WVDOT, TRAFFIC ENGINEERING DIVISION TO OBTAIN COPIES OF EXISTING SIGNAL PLANS AND TIMINGS AT 304-558-3063.
    BID AS PART OF ITEM 636023-003 (*)-* - PER INTERSECTION, LS.

    THE FOLLOWING SIGNALIZED INTERSECTIONS FOR THIS PROJECT IS:

    B. CONTRACTOR SHALL BE ON 24-HOUR CALL IN CASE OF SIGNAL MALFUNCTION FOR ALL SIGNALS LOCATED ON THIS PROJECT

    C. CONTRACTOR IS RESPONSIBLE MODIFYING SIGNAL TIMING/PHASING, AS NEEDED, FOR EACH SUBSEQUENT PHASE OR SUB-PHASE.

    D. AFTER COMPLETION OF PROJECT, CONTRACTOR SHALL RESTORE ORIGINAL SIGNAL PHASINGS AND TIMINGS TO PRE-CONSTRUCTION CONDITIONS.

TTCP-##

Mead & Hunt

REVISION NUMBER	SHEET NUMBER	REVISION	DATE	BY

THE WEST VIRGINIA DEPARTMENT OF TRANSPORTATION
DIVISION OF HIGHWAYS

TEMPORARY TRAFFIC CONTROL GENERAL NOTES

11-DEC-2025

J04C23C03-BLANK

X:\32416000\251911.01\TECH\Roadway\sheets\MOT\ttc_general notes_eugene carter bridge.dgn

2131bjs

Public Roads Div.	State Dist. No.	State Project No.	Federal Project No.	County	Sheet No.	Total Sheets
W.V.	01	S320 -64- 57.44 00	NHPP-0064 (497)D	KANAWHA	XX	XX

TEMPORARY TRAFFIC CONTROL NOTES (CONT.)

31. PAYMENT

PAYMENT FOR TRAFFIC CONTROL DEVICE UNITS SHALL BE MADE ONCE FOR THE ENTIRE PROJECT. NO ADDITIONAL PAYMENT SHALL BE MADE FOR REMOVING AND RESETTING OF TRAFFIC CONTROL DEVICES.

32. TEMPORARY PAVEMENT MARKINGS PAINT AND TAPE

TEMPORARY PAINT SHALL BE APPLIED TO EXISTING ROADAY SURFACE AND BRIDGES FOR EDGE LINES, LANE LINES, TEMPORARY TAPE SHALL BE MECHANICALLY APPLIED. SOLID LINES SHALL HAVE A 2' GAP EVERY 50'-0".

ALL LANE ARROWS AND LANE LETTERS THAT NEED INSTALLED AS A TEMPORARY MARKINGS SHALL BE OF TYPE V MATERIAL AND APPLIED AT A THICKNESS OF 60 MILS. CONTRACTOR SHALL ADHERE TO SPECIFICATION 715.40.2 WHEN APPLYING MATERIAL TO ROADWAY OR BRIDGE SURFACES. THE TYPE V MATERIAL AND WORK TO INSTALL LANE ARROWS AND LANE LETTERS SHALL BE BID AS ITEM 636008-002.

TEMPORARY TAPE SHALL BE APPLIED TO NEW CONCRETE ROADWAY AND BRIDGE SURFACES FOR ALL TEMPORARY CONDITIONS UNTIL FINAL PAVEMENT MARKINGS ARE APPLIED.

33. THE CONTRACTOR IS ENCOURAGED TO EXPEDITE THE CONSTRUCTION OF THIS PROJECT. SPECIAL PROVISIONS HAVE BEEN DEVELOPED FOR INCENTIVE/DISINCENTIVE PAYMENTS TO COMPLETE THIS PROJECT IN THE EARLIEST TIME POSSIBLE. THE INCENTIVE/DISINCENTIVE PAYMENTS ARE LISTED IN THE SPECIAL PROVISION.

34. TRAFFIC DIRECTOR

IT SHALL BE THE CONTRACTOR'S RESPONSIBILITY TO HIRE AN OFF-DUTY LAW ENFORCEMENT OFFICER AND A CAR WITH BLUE FLASHING LIGHTS TO BE PRESENT DURING SETUP AND REMOVAL OF TEMPORARY TRAFFIC CONTROL, LANE CLOSURES ALONG EACH DIRECTION OF THIS PROJECT, DETOURS AND OTHER CERTAIN CONSTRUCTION ACTIVITIES AND AS DIRECTED BY THE ENGINEER. THESE SHALL BE PAID FOR AS PART OF ITEM 636014-002, TRAFFIC DIRECTOR.

35. TEMPORARY PAVEMENT

TEMPORARY PAVEMENT IS INCLUDED IN THIS PROJECT FOR USE IN PAVING OF RIGHT SHOULDER RUMBLE STRIPS DURING LANE SHIFTS. RUMBLE STRIPS ARE TO BE INSTALLED TO ORIGINAL CONDITIONS AT END OF PROJECT. SEE ROADWAY PLANS FOR DETAILS, ITEMS, AND QUANTITIES.

36. INTERMITTENT CLOSURES FOR BEAM ERECTION

USE CASE XX FOR INTERMITTENT CLOSURES WHEN SETTING GIRDERS AND STAY IN PLACE FORMS OVER ROADWAYS, INSTALL CMS SIGNS 1 MILE IN ADVANCE OF THE CLOSURE AREA ON ALL APPROACHES WARNING OF UPCOMING TRAFFIC STOPPAGE AND THE PLANNED STARTING DATE. COMPLETELY PREPARE SITE USING CHANGEABLE MESSAGE SIGNS, FLAGGERS, AND TRAFFIC DIRECTOR. DURING STOPPAGES, CHANGE CMS MESSAGE TO ALERT MOTORISTS OF THE 30 MINUTE STOPPAGE AND THE HOURS IT WILL BE PERMITTED.

STOP TRAFFIC FOR NOT MORE THAN 30 MINUTES FROM 9:00 PM TO 6:00 AM DURING NIGHTTIME HOURS, AND 9:00 AM TO 2:00 PM DURING DAYTIME HOURS, OR AS APPROVED BY THE PROJECT ENGINEER. AFTER ANY ONE 30-MINUTE STOPPAGE, ALL QUEUED TRAFFIC SHALL BE CLEARED AND ANY SUCCEEDING 30 MINUTE STOPPAGE SHALL NOT OCCUR UNTIL TRAFFIC HAS RETURNED TO "NORMAL" PRE-STOPPAGE FLOW. PENALTY FOR EXCEEDING THE 30-MINUTE PERIOD SHALL BE <INSERT CALCULATED RULD BASED UPON DELAY AND TRAFFIC VOLUME> PER MINUTE.

37. PARKING UNDER BRIDGES

CONTRACTOR SHALL COORDINATE WITH THE DISTRICT RIGHT OF WAY AGENT (WHIT DARBY AT 304-205-8049) AND THE CITY OF WHEELING TO RESTRICT PARKING AND ACTIVITIES UNDER THE BRIDGES WEST OF THE TUNNEL DURING CONSTRUCTION. THESE FACILITIES SHALL NOT BE USED FOR ANY PUBLIC PURPOSE AND SHALL BE FENCED TO RESTRICT ACCESS.

38. IMPACTS TO WATER TRAILS

A. CONTRACTOR IS PERMITTED TO TEMPORARILY CLOSE A PORTION OF THE WATER TRAIL FOR SHORT PERIODS OF TIME DURING OVERHEAD ACTIVITIES INCLUDING BUT NOT LIMITED TO ERECTING BEAMS, PLACING DECK FORMS, DISMANTLING THE EXISTING STRUCTURE, OR ANY OTHER ACTIVITY DETERMINED BY THE ENGINEER.

B. ACCESS TO THE WATER TRAIL WILL BE CLOSED FROM THE CLOSEST PUT-IN/TAKE-OUT LOCATIONS UPSTREAM AND DOWNSTREAM FROM THE CONSTRUCTION SITE FOR THE DURATION OF THESE CONSTRUCTION ACTIVITIES.

C. ADVANCE NOTICE SHALL BE PROVIDED TO WEST VIRGINIA STATE PARKS AT (304) 558-2764 AT LEAST FOURTEEN (14) DAYS IN ADVANCE OF ANY CLOSURE. CONTRACTOR SHALL PROVIDE WATER TRAIL CLOSED SIGNS ON TYPE III BARRICADES AT EACH TRAIL ACCESS POINT UPSTREAM AND DOWNSTREAM OF THE CLOSURE. CONTRACTOR SHALL PROVIDE IN-CREEK SIGNING FOR BOATERS UPSTREAM OF THE LAST PUT-IN/TAKE OUT BEFORE THE CONSTRUCTION AREA.

D. CONTRACTOR SHALL INSTALL OVERHEAD PROTECTION TO PROTECT RECREATIONAL BOATING TRAFFIC PASSING UNDER THE WORK SITE.

39. USE "BUMP" AND "UNEVEN LANES" SIGNS AS NECESSARY. USE "LOW SHOULDER" SIGNS AT APPROXIMATELY 500' SPACING WHEN DIFFERENCE IN ELEVATION IS UP TO 2"; IF GREATER THAN 2", USE DRUMS AT 25' CENTERS AND "SHOULDER DROP OFF" SIGNS AT 500'. THERE WILL BE NO MORE THAN ONE LIFT DIFFERENCE IN ELEVATION BETWEEN ADJACENT LANES.

40. GLARE BARRIER

GLARE BARRIER SHALL BE PROVIDED FOR ALL CROSSOVERS AND AREAS WHERE TEMPORARY BARRIER SEPARATES OPPOSING LANES OF TRAFFIC. SEE SPECIAL DETAILS ON <INSERT SPECIAL DETAIL SHEET #>

41. ROADSIDE ASSISTANCE

THE CONTRACTOR SHALL PROVIDE 24-HOUR ROADSIDE ASSISTANCE WITHIN THE PROJECT AREA AND ANY ACTIVE DETOUR ROUTE. BID ALL WORK AS ITEM 636029-001. THE RESPONSIBILITIES OF THE ROADSIDE ASSISTANCE SHALL BE AS FOLLOWS:

A. THE PROJECT AREA AND ACTIVE DETOURS SHALL BE DRIVEN CONTINUOUSLY FROM THE HOURS OF 6 AM TO 7 PM. IF THE CONTRACTOR IS CONDUCTING NIGHT-TIME WORK, THE PROJECT AREA AND ACTIVE DETOURS SHALL BE DRIVEN DURING ACTIVE NIGHT-TIME CONSTRUCTION. PROVIDING "ON-CALL" OR STATIONARY TOW SERVICES SHALL NOT CONSTITUTE ROADSIDE ASSISTANCE DURING THESE TIMES.

B. THE VEHICLE SHALL BE EQUIPPED TO ADDRESS MINOR ISSUES SUCH AS CHANGING A FLAT TIRE, PROVIDING GASOLINE, AND TOWING.

C. PROVIDING "ON-CALL" TOW SERVICES SHALL NOT CONSTITUTE ROADSIDE ASSISTANCE

42. TEMPORARY LIGHTING

A. ALL TEMPORARY TRAFFIC LIGHTING SHALL COMPLY WITH THE APPLICABLE DOH STANDARD SPECIFICATIONS (SECTION 660 AND SUBSECTION 715.42) AND WEST VIRGINIA DEPARTMENT OF TRANSPORTATION STANDARD DETAILS BOOK, VOLUME II (LATEST VERSION).

B. ALL TEMPORARY LIGHTING ON PROJECT, INCLUDING INSTALLATION, MAINTENANCE, AND SUBSEQUENT REMOVAL SHALL BE BID AS PART OF ITEM 636026-001 (*). * - PER LOCATION

C. TEMPORARY LIGHTING SHALL BE PROVIDED FOR THE FOLLOWING LOCATIONS:

TEMPORARY LIGHTING SHALL BE FUNCTIONAL FOR ALL PHASES OF CONSTRUCTION.

D. CONTRACTOR SHALL PROVIDE A TEMPORARY LIGHTING DESIGN FOR ITEM 636026-001 FOR REVIEW AND APPROVAL BY THE DIVISION. THIS INCLUDES PLAN LAYOUT, POWER SERVICE LOCATION, AND PHOTOMETRICS FOR ANY TEMPORARY CONDITIONS WHERE NEW LUMINAIRES ARE UTILIZED.

E. ANY FLOOD LIGHTS USED SHALL BE LED (5000K CCT) WITH PERFORMANCE EQUIVALENT TO A 250W HPS FLOODLIGHT WITH TYPE III ROADWAY DISTRIBUTION.

F. BASIS FOR LIGHTING DESIGN SHALL BE 0.8-1.0 FOOT-CANDLES (1.0 fc FOR INTERCHANGES) WITH A UNIFORMITY RATIO OF 3:1 TO 4:1.

G. CROSSOVER LIGHTING SHALL EXTEND A MINIMUM OF 500 FEET UPSTREAM AND DOWNSTREAM OF THE CROSSOVER.

H. ALL TEMPORARY POWER SERVICES SHALL BE INDEPENDENT OF EXISTING POWER SERVICES.

I. ALL TEMPORARY SUPPORTS OR WOODEN POLES SHALL BE SET BEHIND GUARDRAIL OR TEMPORARY BARRIER, IF POSSIBLE. WHEN THOSE PROTECTIONS ARE NOT AVAILABLE, TEMPORARY LIGHTING SET BACK SHALL BE AT LEAST 15’ FROM THE SOLID EDGE LINE.

J. THE CONTRACTOR SHALL PROVIDE THE FOLLOWING FOR TEMPORARY POWER SERVICE:

1. TEMPORARY LIGHTING ELECTRICAL SERVICE SHALL BE 240 VOLTS, SINGLE-PHASE, 3-WIRE, WITH GROUND.
2. EACH LIGHTING SYSTEM SHALL BE CONTROLLED BY A SINGLE P.E. CELL MOUNTED TO THE TOP OF THE SYSTEM SERVICE POLE.
3. GUY POLES ARE REQUIRED ACCORDING TO SLOPE.
4. CONTRACTOR SHALL BE RESPONSIBLE FOR INITIATING POWER SERVICE AND PAYING ELECTRIC POWER FOR ALL TEMPORARY LOCATIONS. THIS SHALL BE BID AS PART OF ITEM 636026-001 (*).
5. ALL TEMPORARY POWER SERVICE POLES SHALL BE SET NO MORE THAN 100 FEET FROM POWER SERVICES AND SHALL BE MORE THAN 100 FEET FROM EXISTING OVERHEAD POWER LINES. ALL TEMPORARY SERVICE POLES SHALL BE LOCATED WITHIN THE WVDOT RIGHT-OF-WAY.
6. CONTRACTOR MAY USE ALTERNATIVE SOURCES OF POWER (I.E. SOLAR, GENERATORS) WITH APPROVAL OF THE ENGINEER.

K. CONTRACTOR IS RESPONSIBLE FOR MODIFYING AND/OR RELOCATING TEMPORARY LIGHTING, AS NEEDED, TO ILLUMINATE THE TRAVEL LANES OF EACH SUBSEQUENT PHASE. BID AS PART OF ITEM 636026-001 (*).

L. NAVIGATIONAL AND AERIAL LIGHTING SHALL BE MAINTAINED AT ALL TIMES.

43. ITS DEVICES

THE CONTRACTOR SHALL PROVIDE ITS DEVICES TO SUPPORT THE MONITORING OF THE PROJECT AREA BY THE DOH TRANSPORTATION MANAGEMENT CENTER (TMC) AND CONTRACTOR. ALL DEVICES PROVIDED SHALL BE COMPATIBLE WITH THE DOH'S EXISTING SYSTEM AND SHALL BE LINKED TO THE DOH'S WV 511 SYSTEM. THE CONTRACTOR SHALL PROVIDE A STABLE WIRELESS CONNECTION FOR EACH DEVICE AND BE RESPONSIBLE FOR PAYMENT OF THIS WIRELESS CONNECTION. AT A MINIMUM THE CONTRACTOR SHALL PROVIDE THE FOLLOWING TEMPORARY CCTV CAMERAS WITHIN THE PROJECT AREA. BID WORK AS ITEM 636035-001 (*), * - PER DEVICE. SEE SPECIAL PROVISIONS FOR ADDITIONAL DETAILS. THE CONTRACTOR SHALL PROVIDE THE FOLLOWING:

A. MAINTAIN AND INSTALL DEVICES.

B. DETERMINE LOCATIONS TO MONITOR THE ENTIRE LENGTH OF THE PROJECT DURING THE PROJECT'S DURATION. ANY EXISTING CCTV CAMERAS MAY BE UTILIZED TO MINIMIZE THE AMOUNT OF TEMPORARY CAMERAS.

C. ALL DEVICES SHALL BE COMPATIBLE WITH THE WVDOH'S ATMS FOR 511 PURPOSES.

D. WVDOH POWER SUPPLIES, SIGN ASSEMBLIES, LIGHT POLES, AND STRUCTURES SHALL NOT BE USED FOR MOUNTING DEVICES DURING THIS PROJECT.

E. ONE (1) CCTV CAMERA AT ANY LANE CLOSURE MERGE AREA, IF AN EXISTING WVDOH CCTV CAMERA IS NOT IN POSITION AT THIS LOCATION.

F. CCTV CAMERAS TO PROVIDE FULL COVERAGE OF ANY ONE-LANE SECTIONS OF THE WORK ZONE.

G. ONE (1) CCTV CAMERAS SHALL BE PROVIDED AT THE BACK OF ANY REOCCURRING QUEUE. A REOCCURRING QUEUE IS DEFINED AS ONE THAT OCCURS FOR MORE THAN TWO (2) HOURS DAILY FOR MORE THAN THREE (3) DAYS AS A RESULT OF CONSTRUCTION ACTIVITIES. ONCE A REOCCURRING QUEUE HAS BEEN IDENTIFIED, THE CAMERA(S) SHALL REMAIN IN PLACE THROUGHOUT THAT PHASE OF CONSTRUCTION, IF AN EXISTING WVDOH CCTV CAMERA IS NOT IN POSITION AT THIS LOCATION.

H. CONTRACTOR SHALL BE RESPONSIBLE TO MONITOR AND MAINTAIN FUNCTIONALITY OF DEVICES AND ACTIVE VIDEO FEED DURING CONSTRUCTION.

I. CONTRACTOR SHALL MOVE DEVICES AS REQUIRED FOR EACH PHASE OR AT THE DIRECTION OF THE ENGINEER. BID THIS AS INCIDENTAL TO ITEM 636035-001 (*), * - PER DEVICE.

44. SIGN OVERLAY PANELS

CONTRACTOR SHALL MEASURE THE EXISTING SIGN PRIOR TO FABRICATING THE TEMPORARY OVERLAY PANELS. TEMPORARY OVERLAY PANEL SHALL PROVIDE FULL COVERAGE OF THE UNDERLYING MESSAGE. ALL PANELS SHALL MATCH THE TYPE AND COLOR OF BACKGROUND SHEETING. THE ONLY EXCEPTION TO THIS IS THE'CLOSED' OVERLAY PANEL WHICH SHALL BE DESIGNED AS SHOWN IN THE SIGN FABRICATIONS AND BE RETROREFLECTIVE FLUORESCENT ORANGE SHEETING. ALLOVERLAY PANELS SHALL BE BID AS ITEM 661001-003.

45. ROLLING ROAD BLOCK

SHOULD THE INTERSTATE REQUIRE CLOSURE, A ROLLING ROAD BLOCK SHALL BE UTILIZED. EACH TIME A ROLLINGROAD BLCOK IS UTILIZED IT CANNOT EXCEED 15 MINUTES IN DURATION. THERE SHALL BE A MINIMUM OF 30 MINUTES BETWEEN IMPLEMENTING ANY ADDITIONAL ROLLING ROAD BLOCKS. IF THE CONTRACTOR ALLOWS THE ROLLING ROAD BLOCK TO EXCEED THE ALLOWABLE 15 MINUTES A PENALTY WILL BE ASSESSED OF $60 PER MINUTE FOR EVERY MINUTE THE ROLLING ROAD BLOCK IS RESTRICTING TRAFFIC OVER 15 MINUTES. THE CONTRACTOR SHALL CONTACT THE APPROPRIATE LOCAL WVDOH DISTRICT HEADQUARTERS AT LEAST 72 HOURS IN ADVANCE OF PERFORMING WORK.

ROLLING ROAD BLOCK GUIDELINES: THE CONTRACTOR SHALL ADHERE TO THE FOLLOWING GUIDELINES:

A. THE ROLLING ROAD BLOCK SHALL ONLY BE PERMITTED DURING LANE CLOSURE TIMES SPECIFIED IN CONTRACT PLANS AS DIRECTED BY THE ENGINEER.

B. THE ROLLING ROAD BLOCK SHALL INCLUDE THE USE OF APPROPRIATE LAW ENFORCEMENT VEHICLES (TRAFFIC DIRECTORS). THE CONTRACTOR SHALL MEET WITH THE PROPER AGENCY IN ADVANCE TO DISCUSS EACH PERSON'S ROLE.

C. DUAL INSTALLED CHANGEABLE MESSAGE SIGN (CMS) SHALL BE PLACED A MINIMUM OF 1 MILE IN ADVANCE OF THE BEGINNING OF THE ROLING ROAD BLOCK. BOTH OF THESE CMSs SHALL READ : "ROAD WORK AHEAD; BE PRE-PARED TO STOP". ONE CMS SHALL BE PLACED ON THE RIGHT SHOULDER AND THE OTHER SHALL BE PLACED IN THE MEDIAN. IF PLACING A CMS IN THE MEDIAN IS NOT FEASIBLE, AS DETERMINED BY THE ENGINEER, THEN THE SECOND CMS SHALL BE PLACED ON THE RIGHT SHOULDER AT 1 MILE IN ADVANCE OF THE FIRST CMS.

D. DURING THE ROALLING ROAD BLOCK EACH LANE OF THE TRAVEL WAY SHALL HAVE A TRAFFIC DIRECTOR OCCUPYING THAT TRAVEL LANE WITH THE APPRO-PRIATE FLASHING LIGHTS ON. ANY ENTRACNE RAMP BETWEEN THE BEGINNING THE ROLLING ROAD BLOCK TO ENSURE THERE ARE NO PARKED VEHICLES ALONG THE ROADWAY WHICH COULD TRAVEL IN THE SPACE BETWEEN THE LAST TRAVEL VEHICLE AND THE ROLLING ROADBLOCK.

E. THE TRAVEL SPEED OF THE ROLLING ROADBLOCK SHALL BE 10 MPH AND SHALL BEGIN APPROXIMATELY 4 MILES IN ADVANCE OF THE BEGINNING OF THE LANE CLOSURE TAPER IN A TANGENT SECTION OF ROADWAY WITH CLEAR APPROACH SITE DISTANCE OR AS DESIGNATED BY THE ENGINEER. THE ROLLING ROADBLOCK WILL CONTINUE FOR A MAXIMUM OF 15 MINUTES AND WHEN COMPLETED WILL ALLOW AMPLE DISTANCE FOR DRIVERS TO OBTAIN PROPER SPEED AND MERGE INTO THE PROPER LANE FOR THE UPCOMING CLOSURE.

F. AT THE START OF THE ROLLING ROADBLOCK EACH TRAFFICE DIRECTOR WILL MERGE INTO THE TRAVEL WAY UPON A SUFFICIENT GAP IN TRAFFIC AND OCCUPY ALL TRAVEL LANES WITH FLASHING LIGHTS ON AND BEGIN TRAVELING AT A SPEED OF 10 MPH. A SHADOW VEHICLE WILL FOLLOW THE LAST VEHICLE TRAVELING IN ADVANCE OF THE ROLLING ROADBLOCK PASSES A CLOSED ENTRANCE RAMP MAY BE OPENED.

G. DURING THE OPERATION OF THE ROLLING ROADBLOCK A TRAFFIC DIRECTOR SHALL BE POSITIONED IN ADVANCE OF THE BACK OF THE QUEUE. IT SHOULD BE NOTED THAT THIS POINT WILL CONTINUALLY BE SHIFTING BACK AS THE TRAFFIC BACKUP CONTINUES AND THE TRAFFIC DIRECTOR MUST ALSO CONSTANTLY REPOSITION THE VEHICLE WITH FLASHING LIGHTS TO WHERE TRAFFIC APPROACHING THE REAR OF THE QUEUE WILL HAVE ADEQUATE TIME TO SLOW OR STOP.

H. THE LEAD VEHICLE IN THE ROLLING ROADBLOCK SHOULD HAVE RADIO COMMUNICATION WITH THE WORK CREW AT ALL TIMES. THE WORK CREW SHALL NOTIFY THE TRAFFIC DIRECTORS WHEN ONE OR MORE LANES IS READY TO BE REOPENED AT THE WORK SITE AND AT THIS POINT THE TRAFFIC DIRECTORS SHALL RELEASE TRAFFIC. IF FOR UNSEEN REASONS, AT THE END OF THE 15 MINUTES THE WORK CREW IS NOT READY FOR THE ROADWAY TO BE REOPENED THE TRAFFIC DIRECTORS IN THE ROLLING ROADBLOCK SHALL SLOWLY COME TO A COMPLETE STOP AND SHALL REMAIN STOPPED IN THE TRAVEL LANES BLOCKING TRAFFIC UNTIL THE WORK CREW IS READY FOR THE ROADWAY TO BE OPENED TO TRAFFIC. THERE SHALL BE A PENALTY ASSESSED TO THE CONTRACTOR OF $60 PER MINUTE FOR EVERY MINUTE OVER 15 MINUTES IF A ROLLING ROADBLOCK LASTS OVER 15 MINUTES (ALSO SEE CONTRACT PLANS).

I. THE COST FOR A ROLLING ROADBLOCK SHALL BE BID AS ITEM 636050-001, ROLLING ROADBLOCK, PER HOUR. THIS COST INCLUDES ANY ADDITIONAL SIGNS, TWO CMSs, TRAFFIC DIRECTORS, SHADOW VEHICLES, FLAGGERS, LABOR NEEDED TO PROPERLY PERFORM THE ROLLING ROADBLOCK.

J. CALCULATION OF THE NUMBER OF HOURS FOR THE ROLLING ROADBLOCK TO BE PAID TO THE CONTRACTOR SHALL BE CALCULATED AS FOLLOWS:

J.1. 1.5 HOURS PREPARATION TIME BEFORE THE START OF THE ROLLING ROADBLOCK. THIS TIME SHALL BE PAID ONE TIME PER LOCATION PER DAY.

J.2. 0.25 HOURS FOR EACH ROLLING ROADBLOCK PERFORMED.

J.3. 0.5 HOURS BETWEEN SUCCESSIVE ROLLING ROADBLOCKS IF MORE THAN ONE ROLLING ROADBLOCK IS PERFORMED PER DAY.

J.4. 0.5 HOURS OF THE DEACTIVATION OF THE ROLLING ROADBLOCK ONCE THE FINAL ROLLING ROADBLOCK OF THE DAY IS COMPLETE. THIS TIME SHALL BE PAID ONLY ONE TIME PER LOCATION PER DAY.

TTCP-##

Mead & Hunt

REVISION NUMBER	SHEET NUMBER	REVISION	DATE	BY

THE WEST VIRGINIA DEPARTMENT OF TRANSPORTATION
DIVISION OF HIGHWAYS

TEMPORARY TRAFFIC CONTROL GENERAL NOTES

11-DEC-2025

J04C23C03-BLANK

X:\3241600\251911.01\TECH\Roadway\sheets\MO11ttc_general notes_eugene carter bridge.dgn

2131bjs

Public Roads Div.	State Dist. No.	State Project No.	Federal Project No.	County	Sheet No.	Total Sheets
W.V.	01	S320 -64- 57.44 00	NHPP-0064 (497)D	KANAWHA	XX	XX

TEMPORARY TRAFFIC CONTROL NOTES (CONT.)

46. TEMPORARY OVERLAY NOTES

A. THE METHOD OF ATTACHING SHALL BE BLIND RIVETS AT MAXIMUM SPACING OF TWELVE INCHES (12") ON THE PERIMETER AND TWENTY-FOUR INCHES (24") WITHIN THE INTERIOR OF THE SIGN OR THE SIGN SECTIONS. RIVETS SHALL BE POSITIONED SO AS NOT TO DISTURB OR DAMAGE COPY ON THE UNDERLYING SIGNS.

B. THE CONTRACTOR'S TEMPORARY OVERLAY INSTALLATION, MAINTENANCE, AND TAKE-DOWN OPERATIONS SHALL NOT DAMAGE THE EXISTING SIGN LEGEND OR BACKGROUND. IF THE ENGINEER BELIEVES THE CONTRACTOR HAS DAMAGED A SIGN, REPAIRS SHALL BE MADE AT THE CONTRACTOR'S EXPENSE.

C. OVERLAY WORK ON ANY ONE SIGN SHALL NOT TAKE MORE THAN 24 HOURS.

D. THE CONTRACTOR SHALL BE RESPONSIBLE FOR FURNISHING ALL MATERIALS, LABOR AND EQUIPMENT NECESSARY TO PERFORM THE WORK, AND SUCH WILL BE CONSIDERED PART OF ITEM 661001-003.

E. TEMPORARY OVERLAYS AND TEMPORARY SIGNS SHALL BE INSTALLED JUST PRIOR TO OR SIMULTANEOUSLY WITH THE INSTITUTION OF THE PARTICULAR SITUATION OR PHASE THAT THEY APPLY TO. AS SUCH, THE TRAFFIC CONTROL REQUIRED FOR THE PARTICULAR SITUATION OR PHASE SHALL ALSO INCLUDE THE TRAFFIC CONTROL FOR THE TEMPORARY OVERLAYS AND/OR TEMPORARY SIGNS. ANY TEMPORARY OVERLAYS AND/OR TEMPORARY SIGNS INSTALLED BEFORE THE PARTICULAR SITUATION OR PHASE PREVAILS SHALL BE COVERED APPROPRIATELY UNTIL THAT SITUATION PREVAILS.

F. THE DIMENSIONS FOR EXISTING SIGN PANELS AND PROPOSED OVERLAYS ARE UNKNOWN. PRIOR TO DEVELOPING SHOP DRAWINGS FOR THE OVERLAY PANELS, THE CONTRACTOR SHALL VERIFY THE EXISTING SIGN DIMENSIONS AND THE DIMENSIONS REQUIRED FOR THE OVERLAY PANEL TO ADEQUATELY COVER THE REQUIRED AREA AS INDICATED IN THE PLANS. THE CONTRACTOR SHALL SHOW THE ACTUAL DIMENSIONS OF EXISTING PANELS AND THE PROPER DIMENSIONS OF THE OVERLAY PANELS IN THE SHOP DRAWING SUBMITTALS.

G. FOR THE "CLOSED" OVERLAY, THE OVERLAY PANEL SHALL BE INSTALLED SUCH THAT ALL PORTIONS OF THE EXISTING SIGN MESSAGE ARE AT LEAST PARTIALLY COVERED AS INDICATED ON THE PLANS AND AS DIRECTED BY THE ENGINEER.

H. ALL TEMPORARY OVERLAYS SHALL BE REMOVED AT THE END OF THE APPLICABLE TRAFFIC CONTROL PHASE. THIS SHALL BE BID AS PART OF ITEM 661001-003.

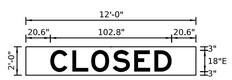

ASSY. NO	LOCATIONS AS PER PLAN
SIGN NO.	OVERLAY-1
LxH (AREA)	12' X 2' (24 SF)
MARGIN/BORD/RAD	
MATERIAL	TYPE XI
BACKGROUND	FLAT SHEET
	COLOR: FL ORANGE
LEGEND/BORDER	
	COLOR: BLACK

Dimensions are in inches,tenths

Letter spacings are to start of next letter

LETTER POSITIONS (X)

	C	L	O	S	E	D							LENGTH	SERIES / SIZE
														E 2000
20.6	18.7	16	18.2	18.2	17.1	14.6	20.6						102.8	18

47. TEMPORARY PLATING

WITH THE APPROVAL OF THE ENGINEER, THE USE OF A TEMPORARY PLATING SYSTEM IS ALLOWABLE TO ASSIST IN EXPANSION DAM CONSTRUCTION. THE PLATING SYSTEM SHALL HAVE A SKID RESISTANT SURFACE EQUAL TO OR GREATER THAN SKID RESISTANT ASPHALT AS APPROVED BY THE ENGINEER. THE CONTRACTOR SHALL CONTINUALLY MONITOR THE PLATING SYSTEM TO ENSURE THAT IT IS MAINTAINED IN A SECURE CONDITION DURING THE ENTIRE DURATION OF ITS USE.

THE CONTRACTOR SHALL BE PREPARED TO MAKE IMMEDIATE EMERGENCY REPAIRS TO THE PLATING SYSTEM DURING ITS USE AND THE CONTRACTOR SHALL REPAIR, TO THE SATISFACTION OF THE ENGINEER, ANY DEFICIENCIES TO THE ROADWAY OR BRIDGE STRUCTURE THAT IS CAUSED BY THE INSTALLATION, MAINTENANCE, OR REMOVAL OF THE PLATING SYSTEM AT NO ADDITIONAL COST TO THE WVDOH.

THE TEMPORARY PLATING SYSTEM SHALL EITHER BE INSTALLED FLUSH WITH THE EXISTING ROADWAY SURFACE, OR ASPHALTIC TAPERS SHALL BE INSTALLED LEADING UP TO EACH SIDE OF THE PLATE AT A RATE OF 10 FEET HORIZONTAL FOR EVERY 1 INCH MEASURED ALONG THE VERTICAL FACE OF THE PLATE.

THE TEMPORARY PLATING SYSTEM IS ALLOWED TO BE IN USE FROM THURSDAYS AT 9:00 PM THROUGH THE FOLLOWING MONDAYS AT 6:00 AM. IN ADDITION, UNLESS OTHERWISE AUTHORIZED BY THE ENGINEER IN WRITING, THE TEMPORARY PLATING SYSTEM IS NOT ALLOWABLE ON ANY DAYS RELATED TO HOLIDAY WEEKENDS AS DEFINED BY SECTION 101.2 OF THE STANDARD SPECIFICATIONS.

IF THE TEMPORARY PLATING SYSTEM IS FOUND TO BE IN USED OUTSIDE OF THE ALLOWABLE TIME FRAMES, A PENALTY OF $250 PER MINUTE, PER LANE, PER DIRECTION ALONG THE INTERSTATE MAINLINE AND $100 PER MINUTE, PER RAMP, PER DIRECTION FOR ALL RAMPS SHALL BE ASSESSED TO THE CONTRACTOR.

THE CONTRACTOR SHALL SUBMIT A COPY OF HIS TEMPORARY PLATING SYSTEM DESIGN, SEALED BY A WEST VIRGINIA REGISTERED PROFESSIONAL ENGINEER, TO THE WVDOH ENGINEERING DIVISION FOR APPROVAL BEFORE STARTING ANY WORK.

THE RESPONSIBILITY AND COST TO DESIGN, FABRICATE, INSTALL, MAINTAIN, REPAIR, REMOVE, AND OTHERWISE FACILITATE THE USE OF THE TEMPORARY PLATING SYSTEM SHALL BE INCIDENTAL TO ITEM 627016-001, REMOVE AND REBUILD EXPANSION DEVICE.

48. SPECIAL EVENT COORDINATION

THE CONTRACTOR SHALL COORDINATE THEIR CONSTRUCTION WORK SCHEDULE TO HAVE NO LANE CLOSURES, DETOURS, OR ACTIVE WORK PERMITTED DURING THE CITY OF CHARLESTON MARATHON WEEKEND. THIS EVENT IS PLANNED TO OCCUR OVER A WEEKEND IN APRIL 2026 FROM 6:00 AM THURSDAY TO 10:00 PM SUNDAY. THIS APPLIES TO THE 2026 EVENT AND ALL FUTURE MARATHON EVENTS THROUGH 2036. CONTRACTOR SHALL CONTACT MS. KARA FISHER OF THE UNIVERSITY OF CHARLESTON TO PROVIDE A POINT OF CONTACT FOR THEIR PROJECT AT LEAST THREE (3) MONTHS PRIOR TO THE PLANNED MARATHON. ADDITIONAL INFORMATION, SUCH AS THE ROUTE AND SPECIFIC WEEKEND OF THE EVENT CAN BE OBTAINED FROM MS. FISHER.
MS. KARA FISHER
304-614-3129 (CELL)
KARAFISHER@UCWV.EDU

TTCP-##

Mead & Hunt

REVISION NUMBER	SHEET NUMBER	REVISION	DATE	BY

THE WEST VIRGINIA DEPARTMENT OF TRANSPORTATION
DIVISION OF HIGHWAYS

TEMPORARY TRAFFIC CONTROL GENERAL NOTES

11-DEC-2025

J04C23C03-BLANK

2191bs

A:\SDK160\DOS191\TITLE\Roadway\sheets\MOT_Gc_General notes_eugene carter bridge.dgn

Public Roads Div.	State Dist. No.	State Project No.	Federal Project No.	County	Sheet No.	Total Sheets
W.V.	01	S320 -64- 57.44	NHPP-0064 (497)D	KANAWHA	XX	XX

TEMPORARY STRUCTURE FOR MAINTAINING TRAFFIC, DECK REPAIRS

THIS ITEM SHALL INVOLVE PROVIDING MATERIALS AND EQUIPMENT THAT WILL ESTABLISH A CONTINGENCY PLAN FOR THE EVENT OF AN EMERGENCY DECK REPAIR.

THE CONTRACTOR SHALL BE REQUIRED TO REPAIR ALL DECK HOLES.

THE REPAIRS SHALL BE SUBJECT TO THE FOLLOWING REQUIREMENTS AND LIMITATIONS:

1. THE ENGINEER SHALL BE THE SOLE AUTHORITY IN DETERMINING THE NEED FOR DECK HOLE REPAIR.
2. THERE SHALL BE NO LIMIT TO THE NUMBER OF DECK HOLES THAT THE CONTRACTOR SHALL BE REQUIRED TO REPAIR.
3. THE TIME REQUIRED TO PATCH DECK HOLES SHALL NOT BE A BASIS FOR A REQUEST OF EXTENDING CONTRACT TIME.
4. THE CONTRACTOR SHALL BE REQUIRED TO IMMEDIATELY INSTALL A DECK HOLE COVER PLATE UPON NOTIFICATION BY THE ENGINEER OF A DECK FAILURE. THE CONTRACTOR SHALL BE REQUIRED TO COMPLETE TEMPORARY COVERING OF THE HOLE WITHIN 15 MINUTES.
5. THE CONTRACTOR SHALL ERECT A PERMANENT REPAIR OF ANY DECK HOLE DURING THE FIRST AVAILABLE "REPAIR WINDOW". THE "REPAIR WINDOW" FOR THE PURPOSE OF THIS CONTRACT, SHALL BE DEFINED AS DAYLIGHT HOURS OF A SINGLE DAY DURING THE "REPAIR WINDOW". THE CONTRACTOR SHALL BE PERMITTED TO FLAG TRAFFIC IN ACCORDANCE WITH THE APPROVED CONTINGENCY PLAN.
6. THE CONTRACTOR SHALL BE REQUIRED TO SUBMIT FOR APPROVAL A CONTINGENCY PLAN THAT ADDRESSES EACH REQUIREMENT STATED HEREIN. THE PLAN SHALL INCLUDE A LIST OF ALL LABOR, EQUIPMENT, EXPENDABLE MATERIALS, SUBCONTRACTORS, ETC. NECESSARY TO MEET THESE REQUIREMENTS.
7. ALL LABOR REQUIRED TO IMPLEMENT THE REPAIR PLAN SHALL BE PAID FOR ON A FORCE ACCOUNT BASIS FOR EACH INCIDENT THAT REQUIRES AN EMERGENCY REPAIR. ALL MATERIALS EXPENDED DURING AN EMERGENCY AND REQUIRED TO BE RESTOCKED PER THE CONTINGENCY PLAN SHALL BE PAID ON A FORCE ACCOUNT BASIS.
8. ANY FAILURE OF THE CONTRACTOR TO COMPLY WITH THE REQUIREMENTS DESCRIBED ABOVE SHALL BE CAUSE FOR THE ENGINEER TO REQUIRE THAT ALL OTHER WORK ON THE PROJECT CEASE UNTIL THE DECK FAILURE IS REPAIRED. ANY TIME LOST DUE TO THIS REQUIREMENT SHALL NOT BE ADDED TO THE CONTRACT TIME.

THE CONTRACTOR SHALL MAINTAIN A STOCKPILE OF THE MATERIALS DESCRIBED BELOW ON THE SITE AT ALL TIMES. THIS STOCKPILE SHALL BE REQUIRED UNTIL THE REPAIRED LANES ARE OPEN TO TRAFFIC.

1. TWO (2) DECK HOLE COVER PLATES SYSTEMS AS PER DETAIL.
2. A SUFFICIENT QUANTITY OF DECK PATCHING MATERIAL TO COMPLETELY PATCH TWO (2) 3' X 3' FULL DEPTH HOLES AS PER DETAIL.
3. ALL EQUIPMENT REQUIRED TO REPAIR ANY DECK HOLE THAT MAY OCCUR. THE CONTRACTOR SHALL BE REQUIRED TO RESPOND IMMEDIATELY TO ANY DECK REPAIR SITUATION AS DETERMINED BY THE ENGINEER.
4. ANY FORMING AND/OR SHORING THAT MAY BE REQUIRED TO REPAIR ANY DECK HOLES THAT MAY OCCUR.
5. ALL REQUIRED TRAFFIC CONTROL TO SET UP CASES E4, E5, OR E6 AS APPROPRIATE OF THE MANUAL FOR "TRAFFIC CONTROL FOR STREET AND HIGHWAY AND MAINTENANCE OPERATIONS".
6. ANY MATERIAL EXPENDED TO COMPLETE A DECK REPAIR SHALL BE RESTOCKPILED. THE CONTRACTOR SHALL BE PAID ON A FORCE ACCOUNT BASIS FOR ALL MATERIAL REQUIRED FOR RESTOCKING PER THE APPROVED CONTINGENCY PLAN.
7. THE LUMP SUM BID PRICES FOR ITEM 636005-001 (*) TEMPORARY STRUCTURE FOR MAINTAINING TRAFFIC, DECK REPAIR SHALL INCLUDE ALL EXPENDABLE MATERIAL REQUIRED TO BE INTIALLY STOCKPILED AS DESCRIBED ABOVE AND ALL REUSABLE MATERIAL REQUIRED PER THE APPROVED CONTINGENCY PLAN AND THE PREPARATION OF THE CONTINGENCY PLAN. LABOR SHALL BE BY FORCE ACCOUNT. PAYMENT OF THE LUMP SUM BID ITEM SHALL BE MADE FOLLOWING CERTIFICATION BY THE ENGINEER OF THE REQUIRED ON-SITE STOCKPILE AND APPROVAL OF THE CONTINGENCY PLAN.

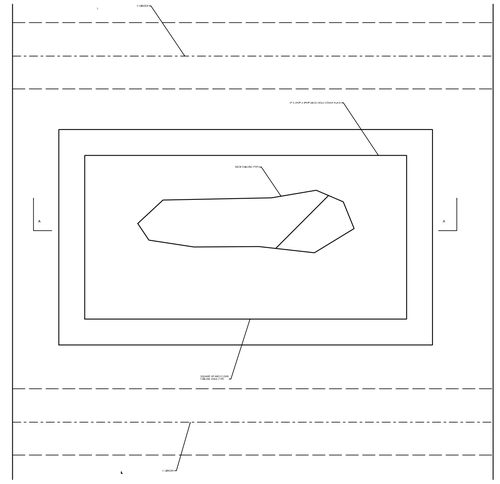

PLAN

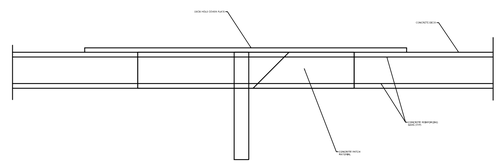

SECTION A-A

EMERGENCY DECK FAILURE REPAIR

NOT TO SCALE

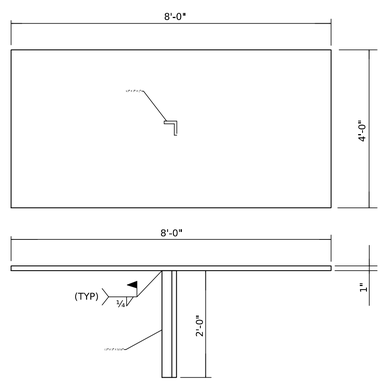

DECK HOLE COVER PLATE

NOTE:

REPAIR DECK HOLE WITH SIKACRETE - 421 C1 RAPID OR APPROVED EQUAL. MATERIAL MUST CONTAIN COARSE AGGREGATE AND BE ABLE TO ACHIEVE A MINIMUM COMPRESSIVE STRENGTH OF 3,000 PSI IN 2 HOURS, 5,000 PSI IN 24 HOURS, 6,000 PSI IN 7 DAYS, AND 6,500 PSI IN 28 DAYS.

STEEL FOR COVER PLATES AND ANGLES SHALL BE GRADE 36 OR 50.

PROVIDE FIELD WELDED ANGLE TO BOTTOM OF PLATE IF REQUIRED TO ANCHOR PLATE IN CONCRETE PATCH.

OVERHEAD PROTECTION

CONTRACTOR SHALL INSTALL OVERHEAD PROTECTION FOR THE ELK RIVER, AS INDICATED, ~~IN ACCORDANCE WITH THE MINIMUM REQUIREMENTS OF THE AASHTO GUIDE SPECIFICATIONS FOR VEHICULAR BRIDGE SUPPORTED PEDESTRIAN SAFETY STRUCTURES, 1st EDITION.~~

A. PLACE AND FIXEDLY PROTECTION TO PREVENT IT FROM BECOMING LOOSE OR DISLODGED.

B. PROTECTION SHALL EXTEND A MINIMUM OF 15 FEET BEYOND THE EDGE LIMITS OF THE ROAD OR TRAIL.

C. PROTECTION SHALL EXTEND A MINIMUM OF 2 FEET BEYOND THE OUTSIDE EDGE OF THE ROAD OR TRAIL.

D. PROTECTION SHALL NOT REDUCE THE VERTICAL CLEARANCE TO THE ROAD OR TRAIL BELOW BY MORE THAN 4".

E. CLEAN DEBRIS FROM THE PROTECTION DAILY OR AS DIRECTED BY THE ENGINEER.

F. PREPARE DETAILED INSTALLATION PROCEDURES, DESIGN CALCULATIONS, AND DETAILS FOR THE PROTECTION. THE PROCEDURES, CALCULATIONS, AND DETAILS SHALL BE SEALED AND SIGNED BY A REGISTERED PROFESSIONAL ENGINEER IN WV.

G. DESIGN SHALL ACCOMMODATE ANTICIPATED LOADS, INCLUDING DEBRIS, EQUIPMENT, WIND, SNOW, ICE, AND WATER. THE DESIGN SHALL ALSO ACCOMMODATE THE IMPACT DUE TO FALLING DEBRIS AND ACCIDENT OF MATERIALS AND EQUIPMENT. THE PROTECTION SHALL BE DESIGNED TO WITHSTAND A LIVE LOAD OF 100 PSF TO SUPPORT AT LEAST FOUR (4) TIMES THE MAXIMUM DESIGN LOAD WITHOUT FAILURE. ~~THE PROTECTION SHALL BE DESIGNED TO WITHSTAND A LIVE LOAD OF 100 PSF. WHERE THERE IS THE POTENTIAL FOR FALLING EQUIPMENT OR DEBRIS FROM OVERHEAD, THE PROTECTION SHALL BE DESIGNED TO WITHSTAND A LIVE LOAD OF 250 PSF. APPLICATION OF LOAD TO THE PROTECTION, DURING FIELD OPERATIONAL OPERATIONS, SHALL BE DESIGNED TO WITHSTAND A LIVE LOAD OF 250 PSF.~~ CLEARLY STATE THE MAXIMUM LOADING ON THE DESIGN CALCULATIONS AND SHEET(S) OF THE PLAN. ~~THE DESIGN LOAD SHALL BE 250 PSF.~~

H. REMOVE PROTECTION IN ITS ENTIRETY WHEN IT IS NO LONGER NEEDED.

I. THIS OVERHEAD PROTECTION OVERLOAD IS IN ADDITION TO ANY CONTAINMENT SYSTEM REQUIRED FOR PAINTING OPERATIONS. IF THE CONTRACTOR WISHES TO USE A CONTAINMENT SYSTEM AS PART OF THE OVERHEAD PROTECTION, THE SYSTEM SPECIFIED AS PART OEPARATIVE PART OF IS DESIGNED FOR THE INDICATED LOADS.

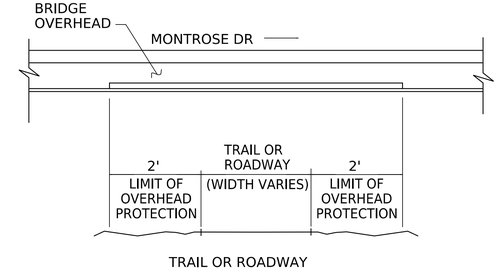

PROFILE VIEW

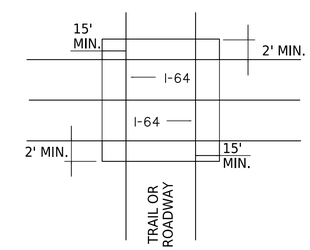

PLAN VIEW

OVERHEAD PROTECTION DETAIL

TTCP-##

REVISION NUMBER	SHEET NUMBER	REVISION	DATE	BY

THE WEST VIRGINIA DEPARTMENT OF TRANSPORTATION
DIVISION OF HIGHWAYS

TEMPORARY TRAFFIC CONTROL SPECIAL DETAILS

11-DEC-2025

J04C23C03-BLANK

\\corp.meadhunt.com\managedfiles\mnp\0241900\0241919171\TECH\Roadway\sheets\0171_special details_engine carter bridge.dgn

23191ds

Public Roads Div.	State Dist. No.	State Project No.	Federal Project No.	County	Sheet No.	Total Sheets
W.V.	01	S320 -64- 57.44	NHPP-0064 (497)D	KANAWHA	XX	XX

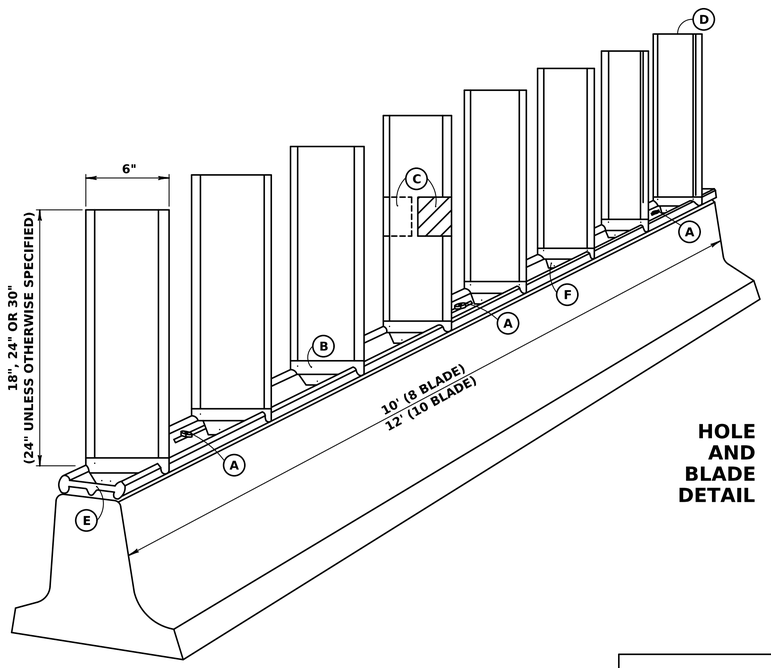

TOP VIEW

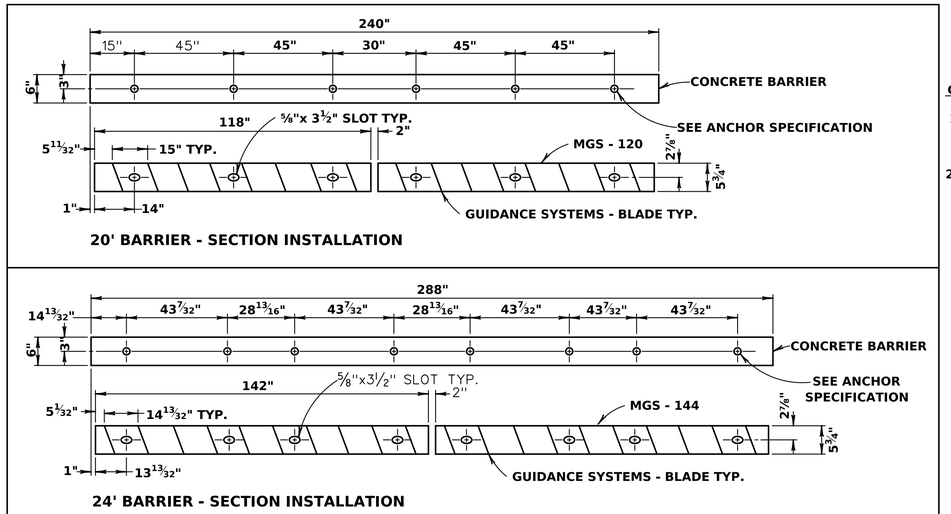

HOLE AND BLADE DETAIL

SPECIFICATIONS

MODULAR UNITS - PORTABLE

10' LENGTH - 8 BLADE UNIT - 22° ANGLE

12' LENGTH - 10 BLADE UNIT - 22° ANGLE

12' UNLESS OTHERWISE SPECIFIED
STANDARD ANCHOR SYSTEM FOR EACH
MODULE CONSISTS OF MIN. THREE (3)
½" ANCHOR BOLTS

GLARE SCREEN BLADES

COLOR - WHITE OR GREEN (GREEN UNLESS OTHERWISE SPECIFIED)

WIDTH - 6" STANDARD

LENGTH - AVAILABLE IN 18", 24" & 30" (24" UNLESS OTHERWISE SPECIFIED)

OPTIONAL REFLECTIVE EDGE STRIPS AVAILABLE (C)

(THREE BY THREE SQUARE PLACED AT MIDPOINT OF LEADING GLARE BLADE BOTH SIDES)

INDIVIDUAL BLADE UNIT

BLADE CAN BE INSTALLED AS A SINGLE UNIT BUT MUST BE NINE INCH BLADE AND DETAILED AS SHOWN ON PLANS

(A) RAIL MOUNTING DETAIL

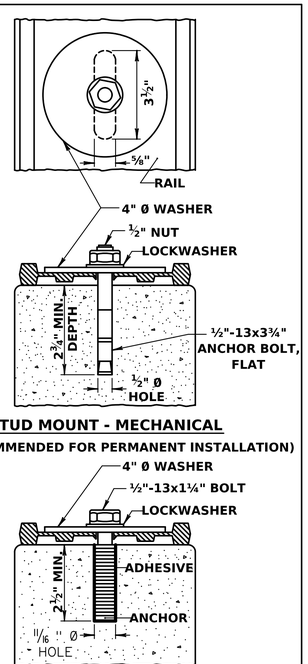

(B) BLADE MOUNTING DETAIL

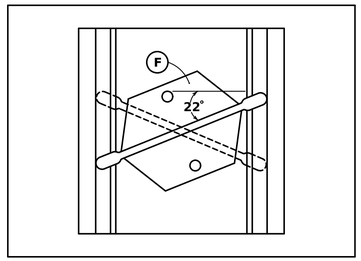

(D) GLAREBLADE DETAIL

GLAREBLADE CROSS SECTION SHALL CONFORM TO THE FOLLOWING DIAGRAM:

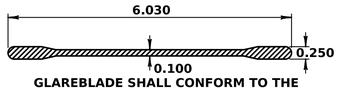

GLAREBLADE SHALL CONFORM TO THE FOLLOWING REQUIREMENTS:

WT./LIN. FT.	0.88 LB/FT
WEBB THICKNESS	0.100 IN.
RAIL THICKNESS	0.250 IN.
WIDTH	6.030 IN.
MIN. SPECIFIC GRAVITY	1.70
MIN. RAIL TENSILE STRENGTH - 0°	40,000 PSI
MIN. WEBB TENSILE STRENGTH - 90°	25,000 PSI

(E) BASE RAIL DETAIL

BASE RAIL CROSS SECTION SHALL CONFORM TO THE FOLLOWING DIAGRAM:

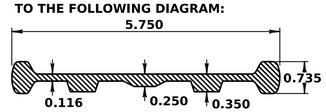

BASE RAIL SHALL CONFORM TO THE FOLLOWING REQUIREMENTS:

WT./LIN. FT.	1.18 LB/FT
WIDTH	5.75 IN.
MIN. SPECIFIC GRAVITY	1.70
MIN. WEBB TENSILE STRENGTH - 0°	25,000 PSI
MIN. RIB TENSILE STRENGTH - 0°	40,000 PSI

(F) MOUNTING BRACKET DETAIL

GLAREBLADE MOUNTING ASSEMBLIES SHALL CONSIST OF TWO (2) ANGLE BRACKETS FASTENED TO EACH BLADE WITH FOUR (4) RIVETS, FACTORY INSTALLED. THE BLADE/BRACKET SHALL BE FASTENED TO THE COMPOSITE BASE RAIL WITH TWO (2) "T" BOLTS AND NYLON INSERT NUTS.

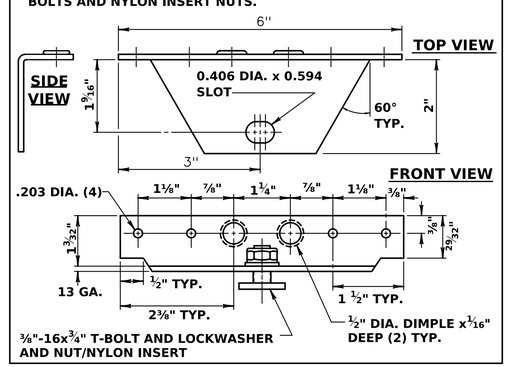

VERSION 1.2 - REVISED FEBRUARY 27, 2023

GENERAL NOTES:

1. **DESCRIPTION:**
THIS WORK SHALL DEFINE THE FURNISHING AND INSTALLATION OF MODULAR GLAREBLADE UNITS ON CONCRETE MEDIAN BARRIERS.

2. **MATERIALS:**
THE GLAREBLADE AND BASE ARE MANUFACTURED FROM GLASS FIBER AND MARBLE REINFORCED THERMOSETTING COMPOSITE AND SHALL CONFORM TO THE FOLLOWING REQUIREMENTS:

   A. GLAREBLADE (SEE DETAIL D).

   B. BASE RAIL (SEE DETAIL E).

   C. ANCHOR BOLTS (SEE DETAIL A).
   THE ANCHOR BOLT SYSTEM SHALL BE ZINC PLATED STAINLESS STEEL OR ZINC PLATED STEEL AS RECOMMENDED BY THE MANUFACTURER AND CONSIST OF THE FOLLOWING TWO STYLES LISTED BY PREFERRED APPLICATION:

   (1) ADHESIVE SYSTEM: FLUSH MOUNTING ANCHOR RECOMMENDED FOR TEMPORARY INSTALLATIONS.
   ADHESIVE ANCHOR SHALL CONSIST OF A TWO-PART ADHESIVE COMPOSED OF A VINYLESTER OR POLYESTER RESIN WITH A HARDENING AGENT AND AN INTERNALLY-THREADED METAL SLEEVE. ANCHOR BOLT SHALL BE INSTALLED WITH LOCKWASHER AND 4-INCH CIRCULAR WASHER. THE ADHESIVE SHALL BE SELF CONTAINED CARTRIDGE WHICH MIXES THE TWO COMPONENTS AS THEY ARE DISPERED. THE ADHESIVE SHALL BE HILTI HIT C-10 OR APPROVED EQUAL.

   (2) MECHANICAL SYSTEM: STUD MOUNTING ANCHOR RECOMMENDED FOR PERMANENT INSTALLATIONS.
   MECHANICAL ANCHOR SHALL CONSIST OF STUD-TYPE STEEL EXPANSION ANCHOR WITH TWO INDEPENDENT STEEL WEDGES. ANCHORS SHALL MEET FEDERAL SPECIFICATION FF-S-325, GROUP II, TYPE 4, CLASS 1, FOR CONCRETE EXPANSION ANCHORS.

   D. GLAREBLADE MOUNTING BRACKETS (SEE DETAIL F).

   E. ALL THERMOSETTING COMPOSITES SHALL RETAIN MECHANICAL PROPERTIES OVER A TEMPERATURE -40 DEGREES F. AND 180 DEGREES F., AND SHOW MINIMUM DEGRADATION AFTER 3,000 HOURS IN A WEATHERMETER.

3. **CONSTRUCTION:**
   A. THE GLAREBLADES AND BASE RAIL SHALL BE PREASSEMBLED PRIOR TO DELIVERY TO CONSTRUCTION SITE.

   B. ANCHOR BOLTS (SEE HOLE AND BLADE DETAIL).

   C. IT SHALL BE THE INSTALLER'S RESPONSIBILITY TO INSURE THAT THE CONCRETE UPON WHICH THE GLAREBLADES ARE TO BE MOUNTED PROVIDES A MINIMUM OF 3,000 P.S.I. COMPRESSIVE STRENGTH AND THAT LARGE HARD AGGREGATE IS NOT PRESENT IN SUCH QUANTITIES AS TO MAKE IT DIFFICULT OR IMPOSSIBLE TO DRILL SATISFACTORY HOLES FOR THE SETTING OF THE EXPANSION ANCHOR STUDS.

   D. IF THE CONCRETE DOES NOT MEET THE ABOVE REQUIREMENTS, THE INSTALLER SHALL PLAN ON USING ALTERNATIVE ANCHORAGE SYSTEM FOR ATTACHING THE BRACKET TO THE CONCRETE.

   E. IF REMOVAL OF THE UNITS IS NECESSARY, THERE SHALL BE NO DAMAGES OR PROTRUSIONS REMAINING ON THE CONCRETE BARRIER, AND IF SO, THEY SHALL BE REPAIRED AT CONTRACTOR'S EXPENSE.

4. **PAYMENT:**
   A. THE METHOD OF MEASURING THE ACCEPTED QUANTITIES OF GLASS FIBER AND MARBLE REINFORCED GLARE BARRIER SHALL BE AT THE CONTRACT UNIT PRICE PER LINEAR FOOT OF GLARE BARRIER PER ITEM 664006-010 (TYPE V), GLARE BARRIER, WHICH PRICES AND PAYMENT SHALL BE FULL COMPENSATION FOR FURNISHING ALL MATERIALS AND DOING ALL WORK PRESCRIBED IN A WORKMANLIKE AND ACCEPTABLE MANNER, INCLUDING ALL GLARE BARRIER, BRACKETS, HARDWARE, DELINEATION, LABOR, TOOLS,EQUIPMENT, SUPPLIES AND INCIDENTALS NECESSARY TO COMPLETE THE WORK.

   B. FOR WORK ZONE SITUATIONS, THE ABOVE NAMED SHALL ALSO INCLUDE ERECTION, MAINTAINING, CLEANING, REPAIRING, RELOCATING IF NECESSARY, AND REMOVING.

GLARE BARRIER TYPE V - SHEET 1 OF 2 GLASS FIBER AND MARBLE REINFORCED

TTCP-##

Mead & Hunt

REVISION NUMBER	SHEET NUMBER	REVISION	DATE	BY

THE WEST VIRGINIA DEPARTMENT OF TRANSPORTATION
DIVISION OF HIGHWAYS

TEMPORARY TRAFFIC CONTROL SPECIAL DETAILS

11-DEC-2025

J04C23C03-BLANK

copy:meadhunt.com\manualdelivery\projects\241900\2919\TITLE\Roadway\details\01_special details_engine carter bridge.dgn

213196

Public Roads Div.	State Dist. No.	State Project No.	Federal Project No.	County	Sheet No.	Total Sheets
W.V.	01	S320 -64- 57.44	NHPP-0064 (497)D	KANAWHA	XX	XX

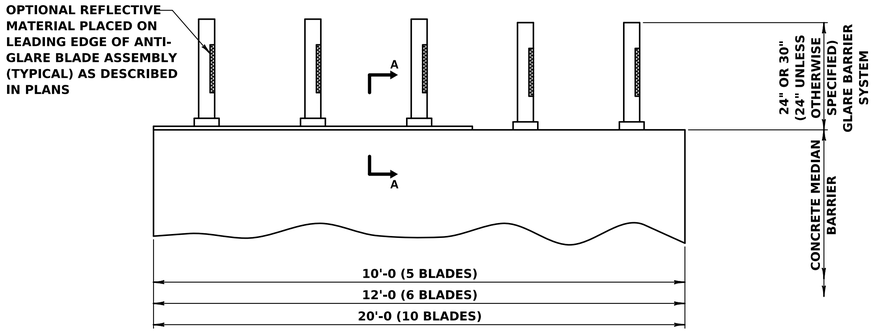

ELEVATION

(TYPICAL BLADE MOUNTING)

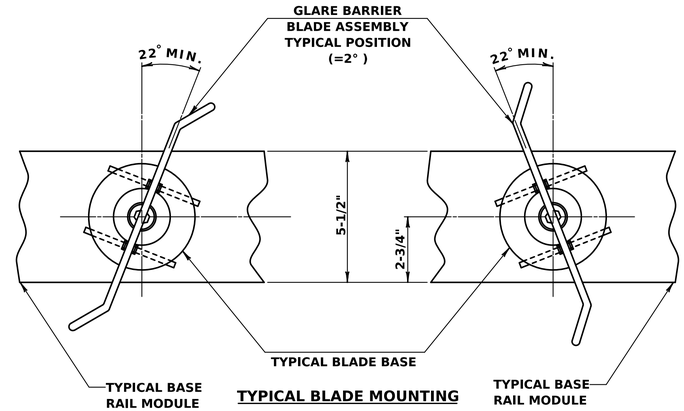

TYPICAL BLADE MOUNTING

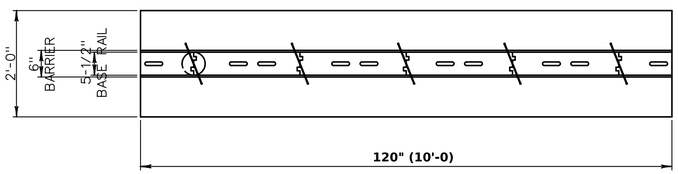

PLAN

TYPICAL 10'-0 BARRIER ANTI-GLARE SHIELD INSTALLATION

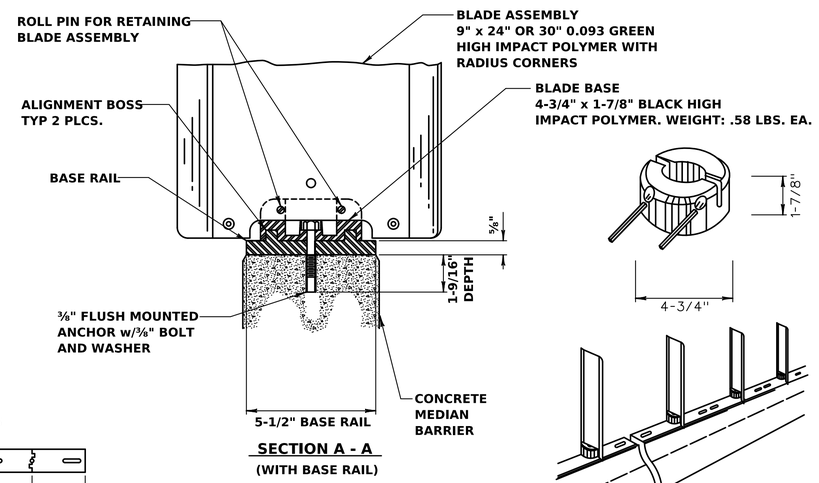

SECTION A - A

(WITH BASE RAIL)

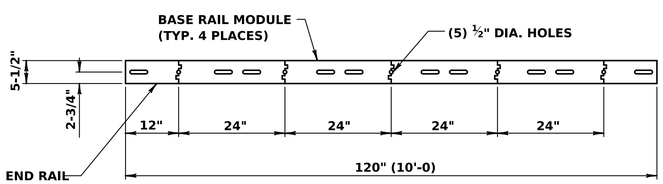

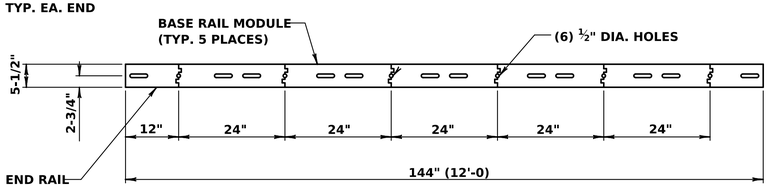

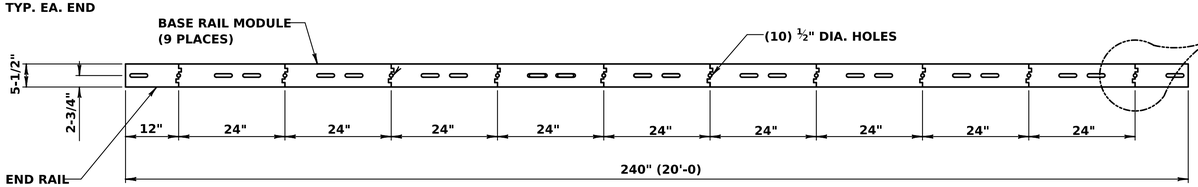

TYPICAL BASE RAIL MOUNTING HOLE LAYOUT FOR 10'-0, 12'-0, AND 20'-0 BARRIER SECTIONS

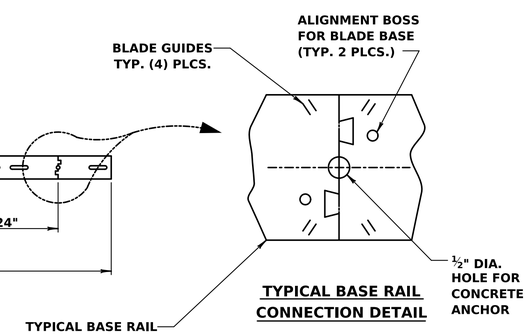

TYPICAL BASE RAIL CONNECTION DETAIL

GENERAL NOTES

1. **DESCRIPTION:**
   THIS WORK SHALL DEFINE THE FURNISHING AND INSTALLATION OF HIGH IMPACT POLYMER GLARE BARRIER (MODULAR OR UNIT EACH) ON CONCRETE BARRIER. GLARE SHIELD UNITS SHALL BE MODULAR UNITS CONSISTING OF VERTICAL BLADES, BASES AND HORIZONTAL BASE RAIL OR INDIVIDUAL MOUNTED UNITS. GLARE SHIELDS CAN BE INSTALLED ON CONCRETE MEDIAN BARRIER FOR TEMPORARY CONSTRUCTION APPLICATIONS, AND THEN RELOCATED FOR PERMANENT INSTALLATION.

2. **MATERIALS:**
   THE GLARE SHIELD SYSTEM SHALL BE MADE OF DURABLE IMPACT RESISTANT, NON-WARPING, NON-METALLIC, POLYMERIC MATERIALS. ALL MATERIALS SHALL BE NEW. THE MODULAR UNITS ARE COMPRISED OF 12" AND 24" MODULES THAT JOIN TOGETHER TO MAKE UP THE DESIRED LENGTH. MODULES CAN BE ASSEMBLED IN ANY 12" OR 24" COMBINATION. THE PANEL SPACING IS SET AT 24". GLARE SHIELD PANELS ARE 9 INCHES IN WIDTH AND HAVE A LENGTH OF UP TO 30 INCHES. THE CUMULATIVE NOMINAL LENGTH OF THE MODULAR UNITS SHALL EQUAL THE LENGTH OF TEMPORARY BARRIER ON WHICH THEY ARE INSTALLED SO THAT THE JOINT BETWEEN BARRIER SECTIONS SHALL NOT BE SPANNED BY ANY ONE UNIT. BLADE SPACING AND WIDTH SHALL PROVIDE FOR A MINIMUM OF A 22 DEGREE SIGHT CUT-OFF ANGLE. THE UNITS SHALL PROVIDE FOR MINIMUM HEIGHT OF 24" ABOVE THE CONCRETE BARRIER. THE BLADES SHALL BE GREEN UNLESS OTHERWISE SPECIFIED.

   EACH MODULAR UNIT SHALL BE SECURED TO THE CONCRETE BARRIER AT 24" INTERVALS STARTING 12" FROM THE END OF EACH BARRIER. THE MODULAR UNITS SHALL BE FABRICATED IN A MANNER TO ALLOW REPLACEMENT OF INDIVIDUAL BLADES WHILE THE MODULAR UNIT REMAINS IN PLACE.

   REFLECTIVE SHEETING MAY BE PLACED ON THE UPRIGHT BLADES IN THE COLOR, LOCATION AND SPACING (INTERVAL) AS NOTED ON THE PLANS.

   THE BLADE, BASE AND RAIL SHALL BE MADE OF HIGH IMPACT POLYMERIC MATERIALS WITH SUFFICIENT STRENGTH TO WITHSTAND 3 IMPACTS FROM A HORIZONTAL STEEL BAR TRAVELING AT 35 M.P.H. AND IMPACTING MID-HEIGHT ON THE BLADE. AFTER 3 IMPACTS THERE SHALL BE NO EVIDENCE OF CRACKING, SPLITTING, DELAMINATING, OR SEPARATION FROM THE SYSTEM.

3. **CONSTRUCTION:**
   ATTACHMENT OF THE BASE RAIL OR INDIVIDUAL UNITS TO THE TOP OF THE CONCRETE BARRIER SHALL BE BY MEANS OF A MECHANICAL SYSTEM (WITH MINIMUM PULL OUT AND SHEAR STRENGTH OF 3,000 PSI) CONSISTING OF AN ANCHOR, BOLT AND WASHER. ALL MOUNTING HARDWARE SHALL BE CORROSION RESISTANT AND AS SPECIFIED BY THE MANUFACTURER.

4. **PAYMENT:**
   A. THE METHOD OF MEASURING THE ACCEPTED QUANTITIES OF HIGH IMPACT POLYMER GLARE BARRIER SHALL BE AT THE CONTRACT UNIT PRICE PER LINEAR FOOT OF GLARE BARRIER PER ITEM 664006-010 (TYPE V), GLARE BARRIER. WHICH PRICES AND PAYMENT SHALL BE FULL COMPENSATION FOR FURNISHING ALL MATERIALS AND DOING ALL WORK PRESCRIBED IN A WORKMANLIKE AND ACCEPTABLE MANNER, INCLUDING ALL GLARE BARRIER, BRACKETS, HARDWARE, DELINEATION, LABOR, TOOLS, EQUIPMENT, SUPPLIES AND INCIDENTALS NECESSARY TO COMPLETE THE WORK.

   B. FOR WORK ZONE SITUATIONS, THE ABOVE NAMED SHALL ALSO INCLUDE ERECTION, MAINTAINING, CLEANING, REPARING, RELOCATING IF NECESSARY, AND REMOVING.

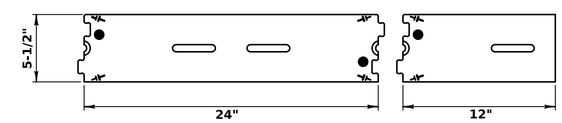

BASE RAIL SECTION

5-1/2" x 24" x⅝" WHITE HIGH IMPACT POLYMER.
WEIGHT: 1.50 LBS. EACH.

HALF RAIL SECTION

5-1/2" x 12" x⅝"
WHITE HIGH IMPACT POLYMER.
WEIGHT: .75 LBS. EACH.

GLARE BARRIER TYPE V - SHEET 2 OF 2 HIGH IMPACT POLYMER

TTCP-##

SCALE: 0 ft.

Mead & Hunt

REVISION NUMBER	SHEET NUMBER	REVISION	DATE	BY

THE WEST VIRGINIA DEPARTMENT OF TRANSPORTATION
DIVISION OF HIGHWAYS

TEMPORARY TRAFFIC CONTROL SPECIAL DETAILS

11-DEC-2025

J04C23C03-BLANK

\\corp.meadhunt.com\projects\Clients\WV DOT\Contracts\2241600\Drawings\Sheets\ROW\TTC_Special Details_Longline Barrier Bridge.dgn
2191bjs

Public Roads Div.	State Dist. No.	State Project No.	Federal Project No.	County	Sheet No.	Total Sheets
W.V.	01	S320 -64- 57.44	NHPP-0064 (497)D	KANAWHA	XX	XX

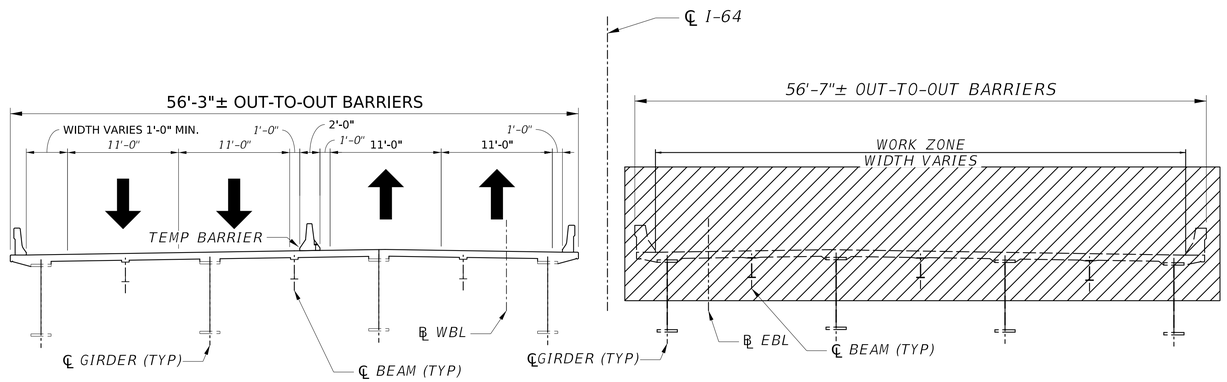

SPANS 1-4 PHASE 1

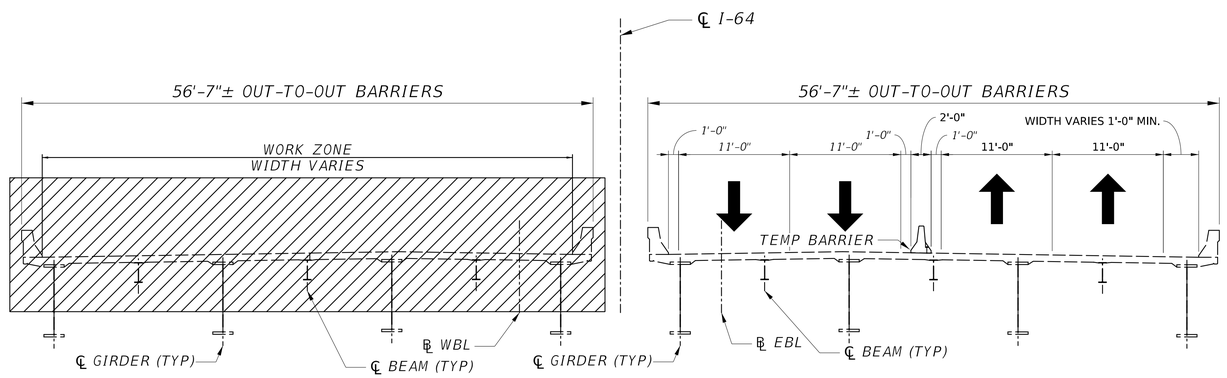

SPANS 1-4 PHASE 2

TTCP-##

NOT TO SCALE

Mead & Hunt

REVISION NUMBER	SHEET NUMBER	REVISION	DATE	BY

THE WEST VIRGINIA DEPARTMENT OF TRANSPORTATION
DIVISION OF HIGHWAYS

TEMPORARY TRAFFIC CONTROL TYPICALS

11-DEC-2025

J04C23C03-BLANK

X:\Q241\0002\5\TITLE\Roadway\sheets\MOT\TTC_Typicals_2PAC-bridge (2 phases).dgn

21519ps

Public Roads Div.	State Dist. No.	State Project No.	Federal Project No.	County	Sheet No.	Total Sheets
W.V.	01	S320 -64- 57.44	NHPP-0064 (497)D	KANAWHA	XX	XX

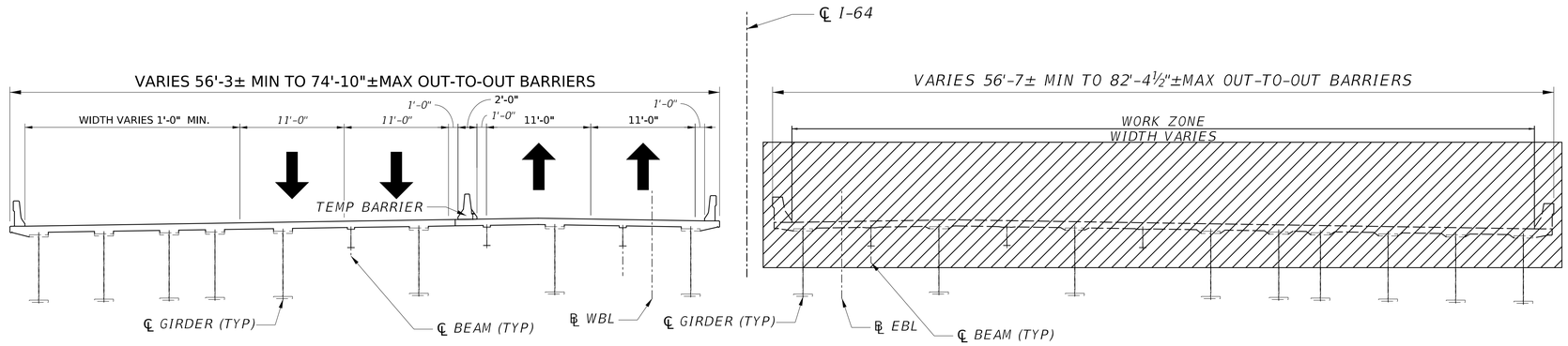

SPANS 5-6 PHASE 1

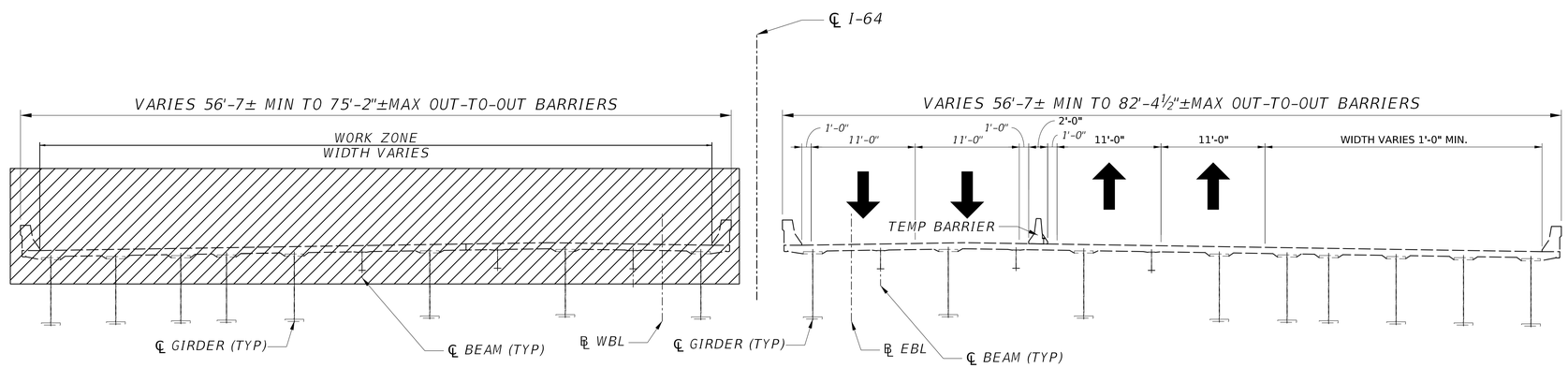

SPANS 5-6 PHASE 2

TTCP-##

NOT TO SCALE

Mead & Hunt

REVISION NUMBER	SHEET NUMBER	REVISION	DATE	BY

THE WEST VIRGINIA DEPARTMENT OF TRANSPORTATION
DIVISION OF HIGHWAYS

TEMPORARY TRAFFIC CONTROL TYPICALS

11-DEC-2025

J04C23C03-BLANK

X:\2241\0002\51\TITLE\CAD\Roadway\Sheets\MOT\TTC_Typicals_2PAC Bridge (2 phase).dgn

2131fds

Public Roads Div.	State Dist. No.	State Project No.	Federal Project No.	County	Sheet No.	Total Sheets
W.V.	01	S320 -64- 57.44	NHPP-0064 (497)D	KANAWHA	XX	XX

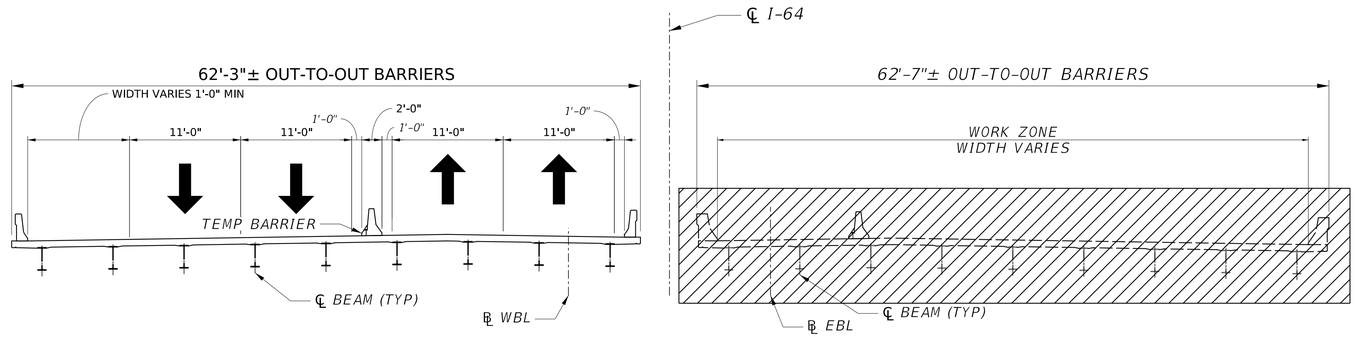

SPAN 7 PHASE 1

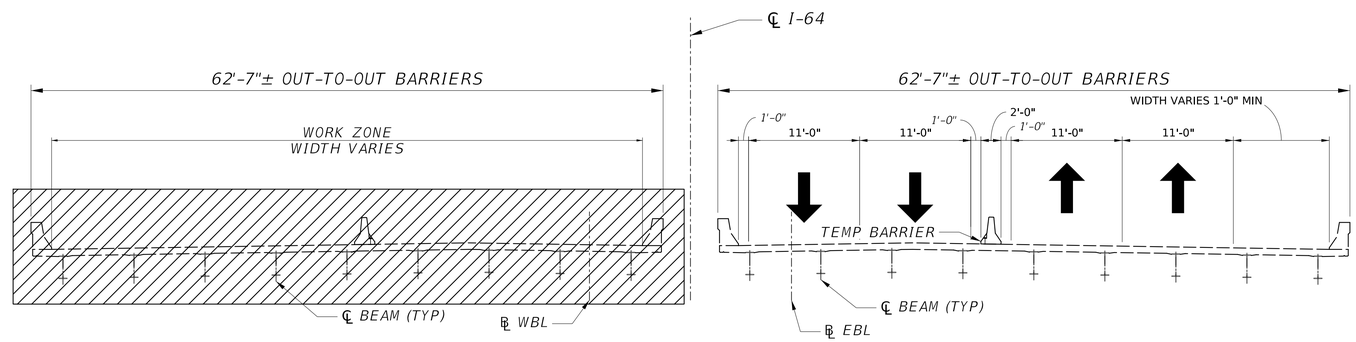

SPAN 7 PHASE 2

11-DEC-2025

TTCP-##

NOT TO SCALE

Mead & Hunt

REVISION NUMBER	SHEET NUMBER	REVISION	DATE	BY

THE WEST VIRGINIA DEPARTMENT OF TRANSPORTATION
DIVISION OF HIGHWAYS

TEMPORARY TRAFFIC CONTROL TYPICALS

J04C23C03-BLANK

X:\Q241\0002\5\TI\TTC\Roadway\Sheets\MOT\TC_typicals_CAC-bridge (2 phases).dgn

21519ps

Public Roads Div.	State Dist. No.	State Project No.	Federal Project No.	County	Sheet No.	Total Sheets
W.V.	01	S320 -64- 57.44	NHPP-0064 (497)D	KANAWHA	XX	XX

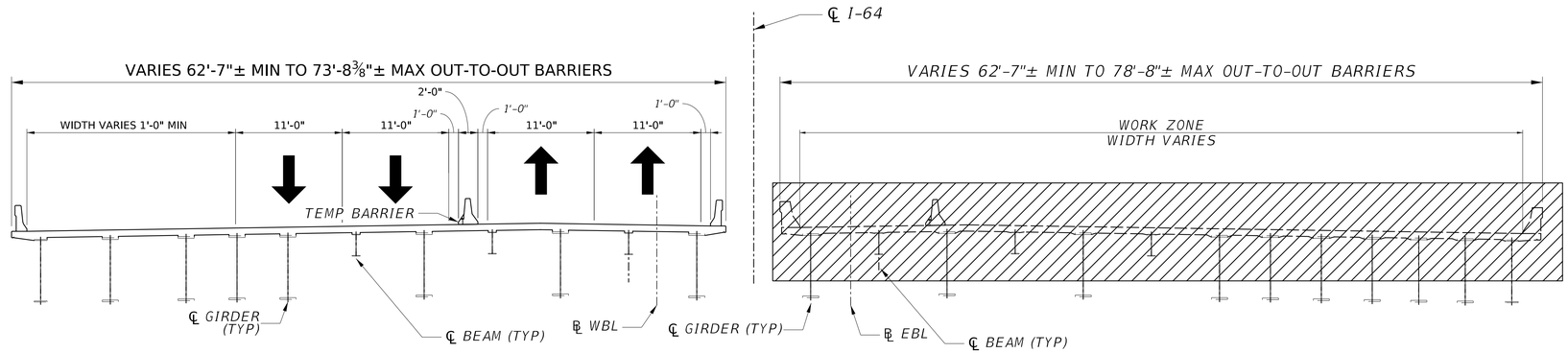

SPANS 8-9 PHASE 1

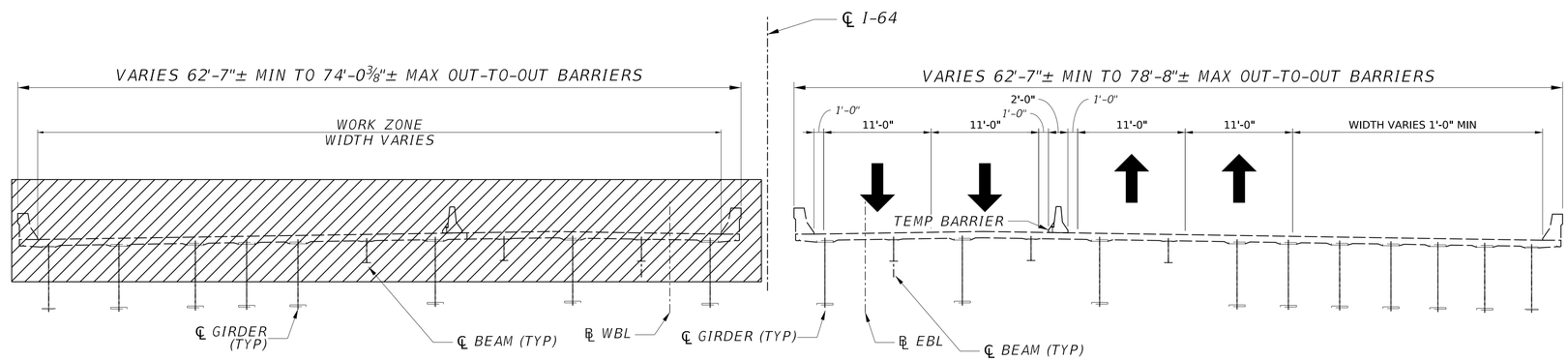

SPANS 8-9 PHASE 2

TTCP-##

NOT TO SCALE

Mead & Hunt

REVISION NUMBER	SHEET NUMBER	REVISION	DATE	BY

THE WEST VIRGINIA DEPARTMENT OF TRANSPORTATION
DIVISION OF HIGHWAYS

TEMPORARY TRAFFIC CONTROL TYPICALS

11-DEC-2025

J04C23C03-BLANK

X:\2241600\2519\TIFF\CH\Roadway\Sheets\MOT\TTC_Typicals_PAC-Bridge (Phase).dgn

2319pb

Public Roads Div.	State Dist. No.	State Project No.	Federal Project No.	County	Sheet No.	Total Sheets
W.V.	01	S320 -64- 57.44	NHPP-0064 (497)D	KANAWHA	XX	XX

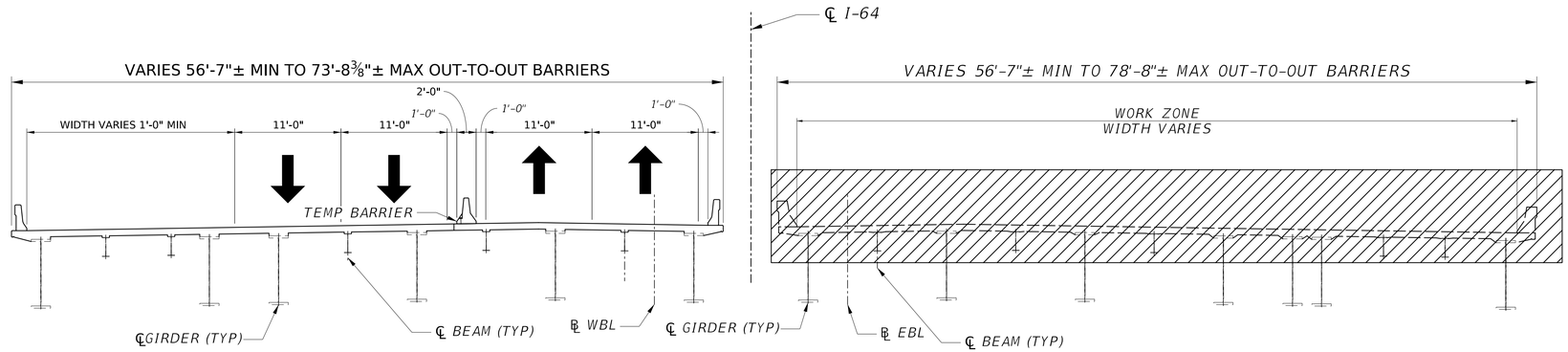

SPANS 10-11 PHASE 1

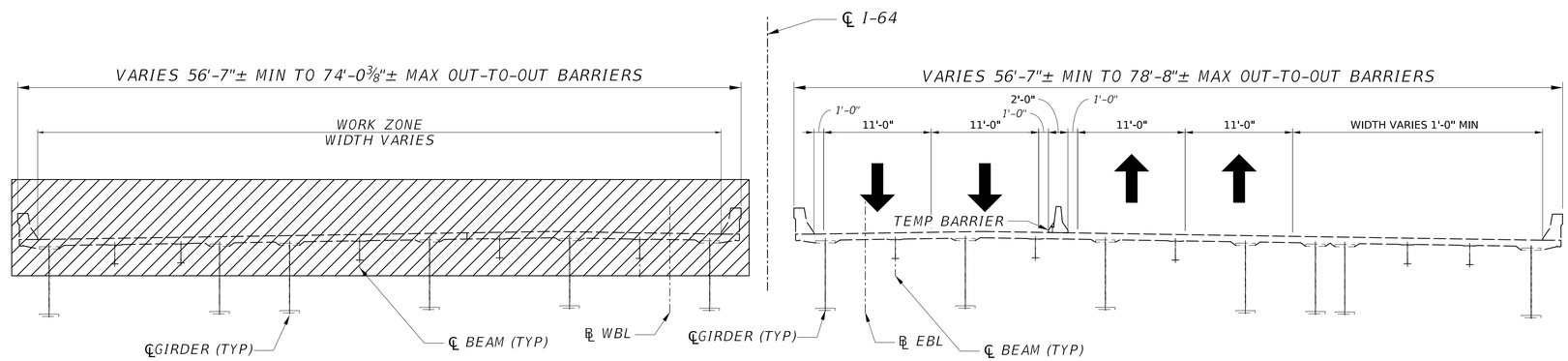

SPANS 10-11 PHASE 2

TTCP-##

NOT TO SCALE

Mead & Hunt

REVISION NUMBER	SHEET NUMBER	REVISION	DATE	BY

THE WEST VIRGINIA DEPARTMENT OF TRANSPORTATION
DIVISION OF HIGHWAYS

TEMPORARY TRAFFIC CONTROL TYPICALS

11-DEC-2025

J04C23C03-BLANK

X:\2241\0002\51\IT\TTE\Roadway\sheet\MOT_Typicals_2PAC-bridge (2 phase).dgn

21519ps

Public Roads Div.	State Dist. No.	State Project No.	Federal Project No.	County	Sheet No.	Total Sheets
W.V.	01	S320 -64- 57.44	NHPP-0064 (497)D	KANAWHA	XX	XX

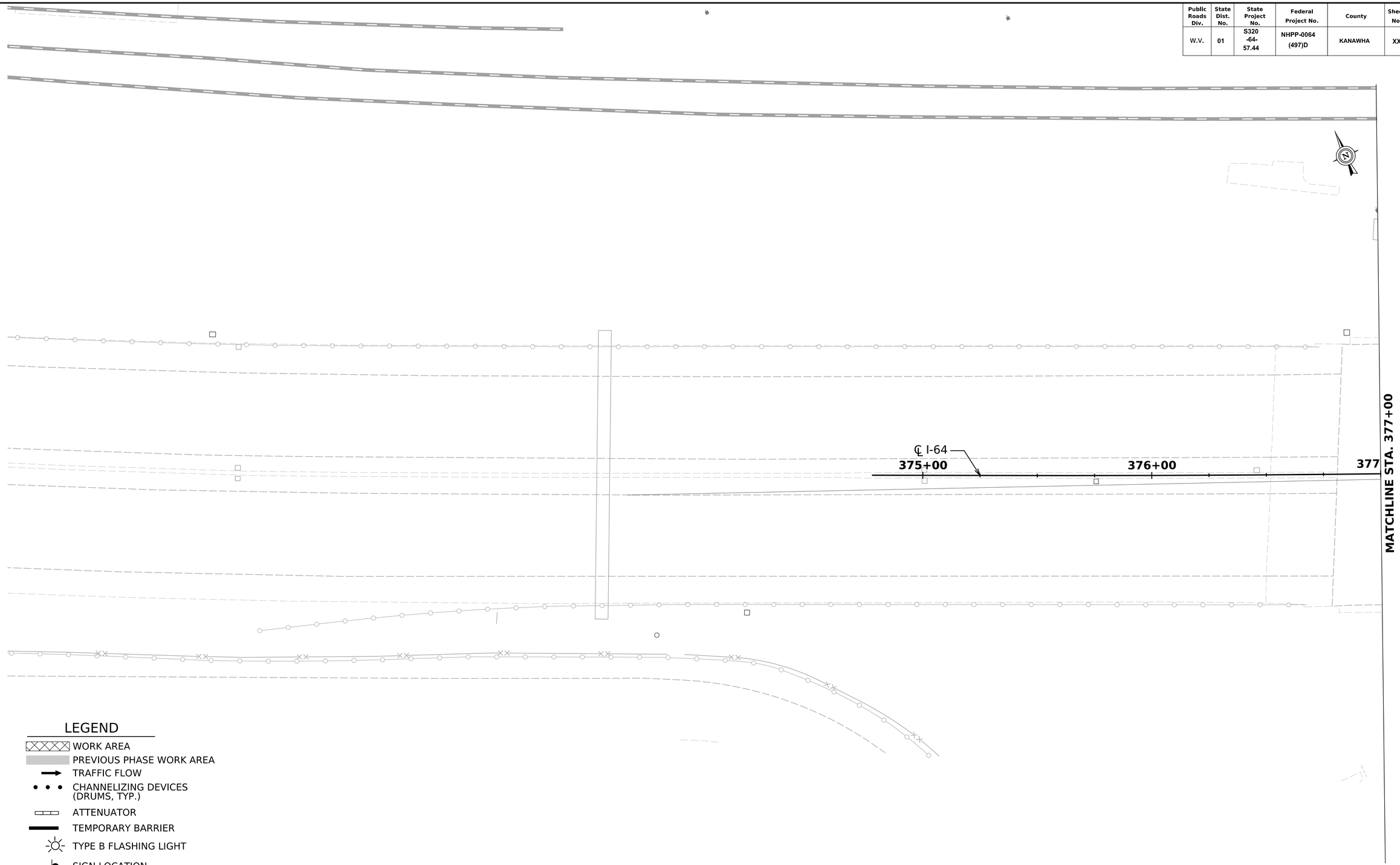

LEGEND

- WORK AREA
- PREVIOUS PHASE WORK AREA
- TRAFFIC FLOW
- CHANNELIZING DEVICES (DRUMS, TYP.)
- ATTENUATOR
- TEMPORARY BARRIER
- TYPE B FLASHING LIGHT
- SIGN LOCATION
- FLAG ORANGE, 18'x18" MIN.
- TTC SIGN
- TYPE III BARRICADE
- T.P.M.P. TEMP. PAVEMENT MARKING PAINT

TTCP-##

SCALE:

0 20 ft

Mead & Hunt

REVISION NUMBER	SHEET NUMBER	REVISION	DATE	BY

THE WEST VIRGINIA DEPARTMENT OF TRANSPORTATION
DIVISION OF HIGHWAYS

TEMPORARY TRAFFIC CONTROL PHASE 1

11-DEC-2025

J04C23C03-PLAN

2131bs

A:\2041160\05191\INTE\PResolve\phase3\MOT\Phase_1 plan sheets_Eugene carter bridge.dgn

Public Roads Div.	State Dist. No.	State Project No.	Federal Project No.	County	Sheet No.	Total Sheets
W.V.	01	S320 -64- 57.44	NHPP-0064 (497)D	KANAWHA	XX	XX

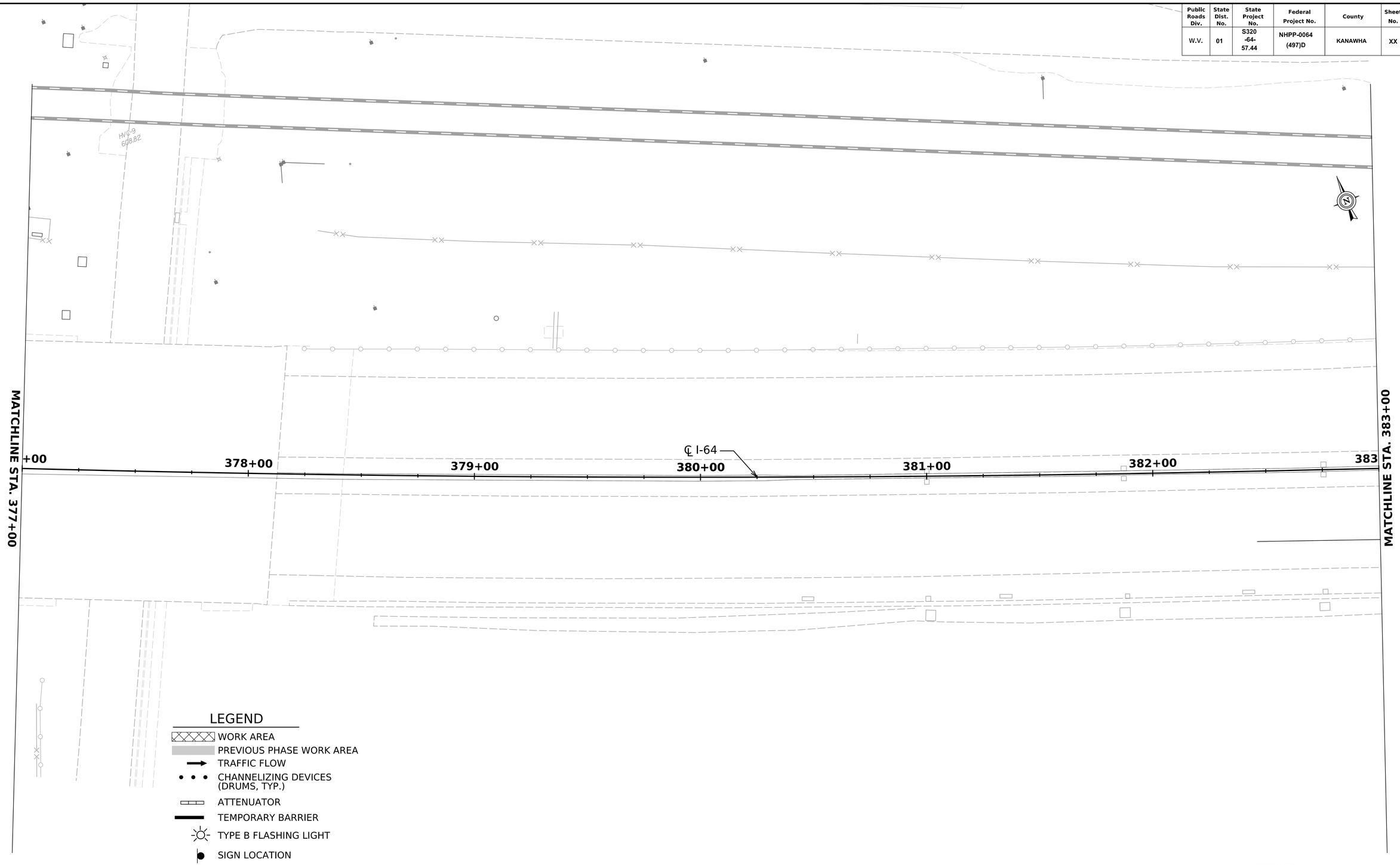

LEGEND

- WORK AREA
- PREVIOUS PHASE WORK AREA
- TRAFFIC FLOW
- CHANNELIZING DEVICES (DRUMS, TYP.)
- ATTENUATOR
- TEMPORARY BARRIER
- TYPE B FLASHING LIGHT
- SIGN LOCATION
- FLAG ORANGE, 18'x18" MIN.
- TTC SIGN
- TYPE III BARRICADE
- T.P.M.P. TEMP. PAVEMENT MARKING PAINT

TTCP-##

SCALE:
0 — 20 ft

Mead & Hunt

REVISION NUMBER	SHEET NUMBER	REVISION	DATE	BY

THE WEST VIRGINIA DEPARTMENT OF TRANSPORTATION
DIVISION OF HIGHWAYS

TEMPORARY TRAFFIC CONTROL PHASE 1

11-DEC-2025

J04C23C03-PLAN

Public Roads Div.	State Dist. No.	State Project No.	Federal Project No.	County	Sheet No.	Total Sheets
W.V.	01	S320 -64- 57.44	NHPP-0064 (497)D	KANAWHA	XX	XX

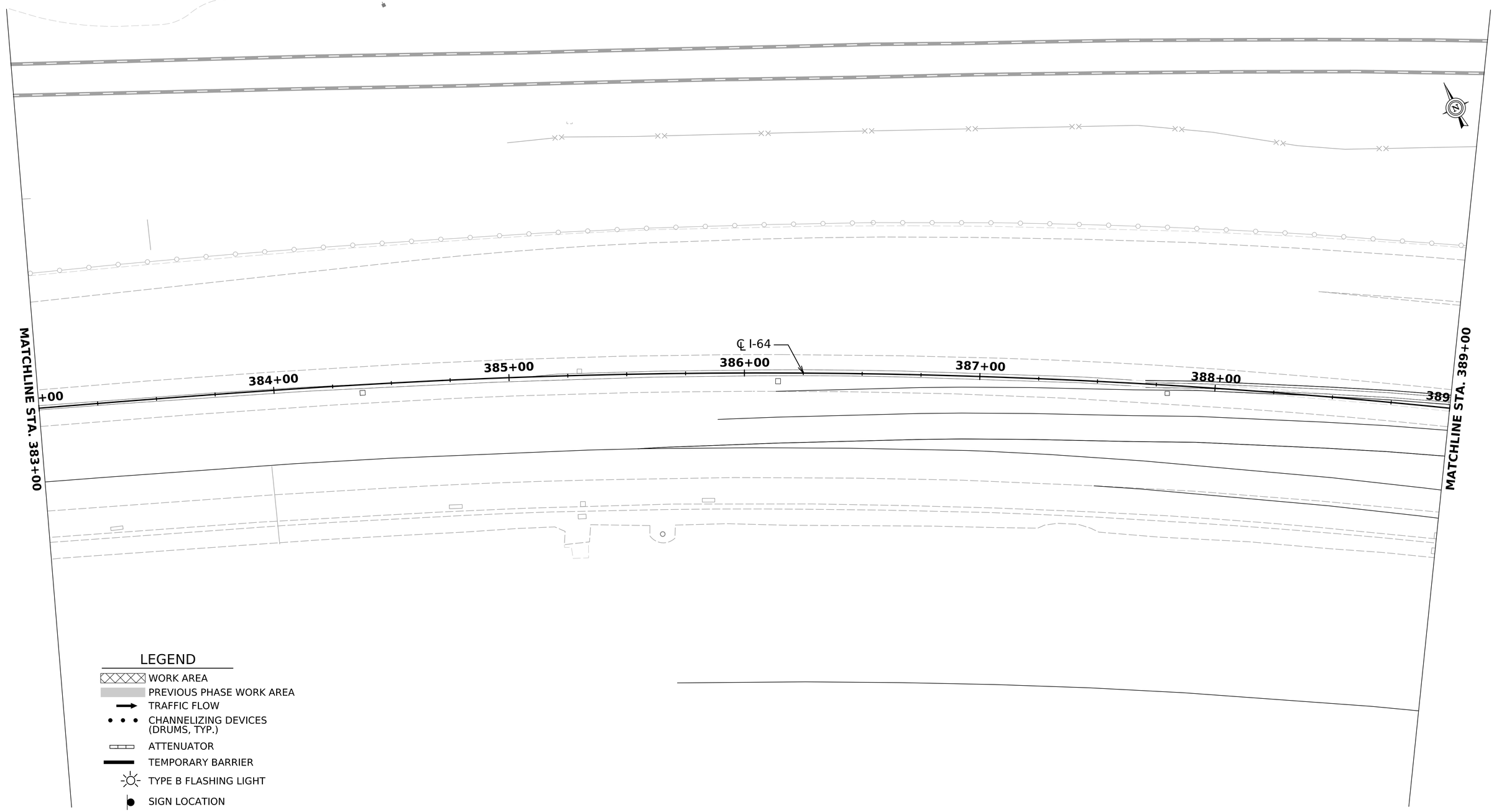

LEGEND

- WORK AREA
- PREVIOUS PHASE WORK AREA
- TRAFFIC FLOW
- CHANNELIZING DEVICES (DRUMS, TYP.)
- ATTENUATOR
- TEMPORARY BARRIER
- TYPE B FLASHING LIGHT
- SIGN LOCATION
- FLAG ORANGE, 18'x18" MIN.
- TTC SIGN
- TYPE III BARRICADE
- T.P.M.P. TEMP. PAVEMENT MARKING PAINT

TTCP-##

SCALE:

0 20 ft

Mead & Hunt

REVISION NUMBER	SHEET NUMBER	REVISION	DATE	BY

THE WEST VIRGINIA DEPARTMENT OF TRANSPORTATION
DIVISION OF HIGHWAYS

TEMPORARY TRAFFIC CONTROL PHASE 1

11-DEC-2025

J04C23C03-PLAN

X:\2241600\2519\TIFF\TECH\Roadway\Sheets\MOT\Rt_Phase 1 Plan Sheets_Incline carter bridge.dgn

2191Sb

Public Roads Div.	State Dist. No.	State Project No.	Federal Project No.	County	Sheet No.	Total Sheets
W.V.	01	S320 -64- 57.44	NHPP-0064 (497)D	KANAWHA	XX	XX

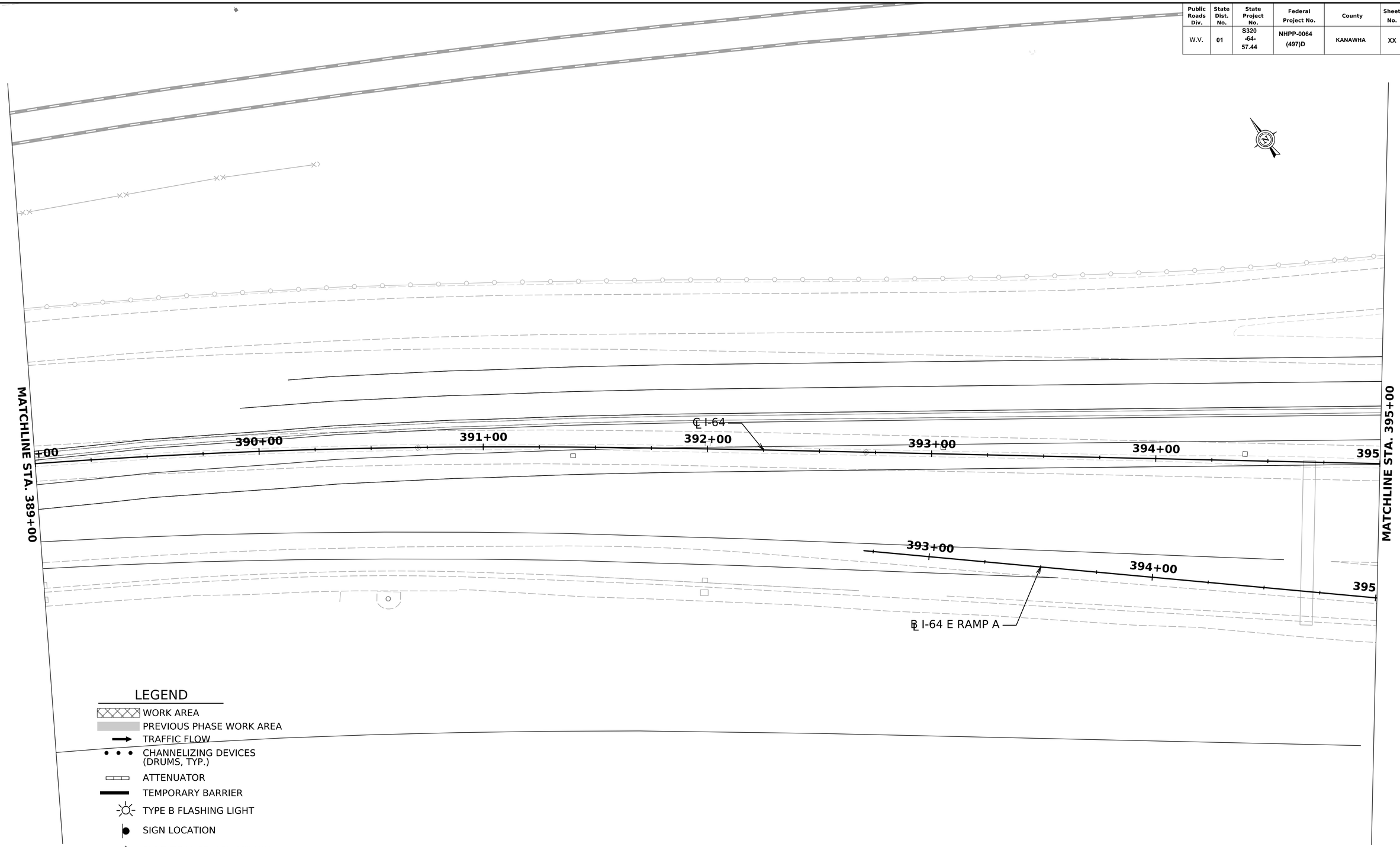

LEGEND

- WORK AREA
- PREVIOUS PHASE WORK AREA
- TRAFFIC FLOW
- CHANNELIZING DEVICES (DRUMS, TYP.)
- ATTENUATOR
- TEMPORARY BARRIER
- TYPE B FLASHING LIGHT
- SIGN LOCATION
- FLAG ORANGE, 18'x18" MIN.
- TTC SIGN
- TYPE III BARRICADE
- T.P.M.P. TEMP. PAVEMENT MARKING PAINT

TTCP-##

SCALE:

0 20 ft

Mead & Hunt

REVISION NUMBER	SHEET NUMBER	REVISION	DATE	BY

THE WEST VIRGINIA DEPARTMENT OF TRANSPORTATION
DIVISION OF HIGHWAYS

TEMPORARY TRAFFIC CONTROL PHASE 1

11-DEC-2025

J04C23C03-PLAN

Public Roads Div.	State Dist. No.	State Project No.	Federal Project No.	County	Sheet No.	Total Sheets
W.V.	01	S320 -64- 57.44	NHPP-0064 (497)D	KANAWHA	XX	XX

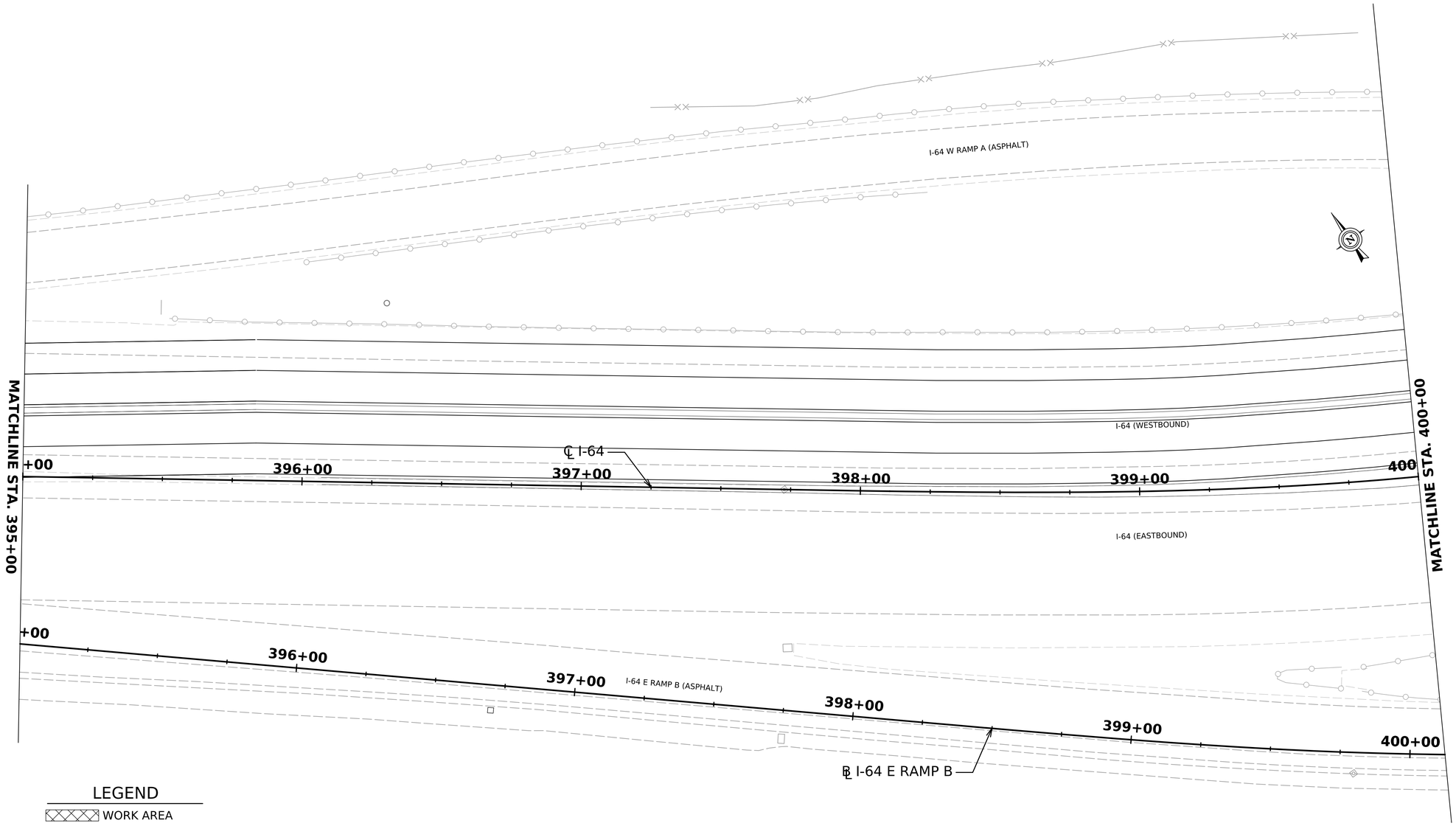

LEGEND

- WORK AREA
- PREVIOUS PHASE WORK AREA
- TRAFFIC FLOW
- CHANNELIZING DEVICES (DRUMS, TYP.)
- ATTENUATOR
- TEMPORARY BARRIER
- TYPE B FLASHING LIGHT
- SIGN LOCATION
- FLAG ORANGE, 18'x18" MIN.
- TTC SIGN
- TYPE III BARRICADE
- T.P.M.P. TEMP. PAVEMENT MARKING PAINT

SCALE:

0 20 ft

TTCP-##

Mead & Hunt

REVISION NUMBER	SHEET NUMBER	REVISION	DATE	BY

THE WEST VIRGINIA DEPARTMENT OF TRANSPORTATION
DIVISION OF HIGHWAYS

TEMPORARY TRAFFIC CONTROL PHASE 1

11-DEC-2025

J04C23C03-PLAN

2131Bs

Public Roads Div.	State Dist. No.	State Project No.	Federal Project No.	County	Sheet No.	Total Sheets
W.V.	01	S320 -64- 57.44	NHPP-0064 (497)D	KANAWHA	XX	XX

LEGEND

- WORK AREA
- PREVIOUS PHASE WORK AREA
- TRAFFIC FLOW
- CHANNELIZING DEVICES (DRUMS, TYP.)
- ATTENUATOR
- TEMPORARY BARRIER
- TYPE B FLASHING LIGHT
- SIGN LOCATION
- FLAG ORANGE, 18'x18" MIN.
- TTC SIGN
- TYPE III BARRICADE
- T.P.M.P. TEMP. PAVEMENT MARKING PAINT

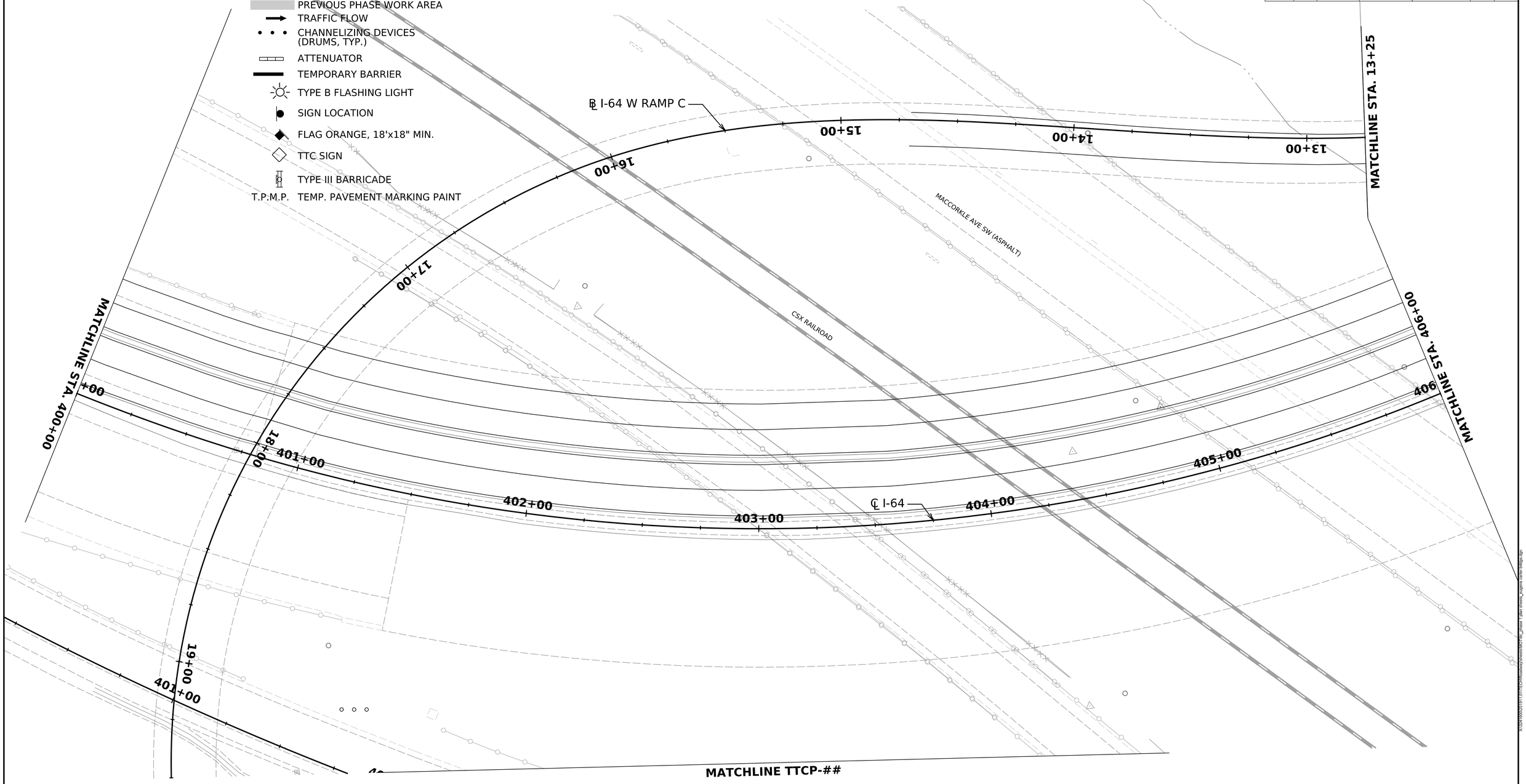

TTCP-##

SCALE:

0 20 ft

Mead & Hunt

REVISION NUMBER	SHEET NUMBER	REVISION	DATE	BY

THE WEST VIRGINIA DEPARTMENT OF TRANSPORTATION
DIVISION OF HIGHWAYS

TEMPORARY TRAFFIC CONTROL PHASE 1

11-DEC-2025

J04C23C03-PLAN

Public Roads Div.	State Dist. No.	State Project No.	Federal Project No.	County	Sheet No.	Total Sheets
W.V.	01	S320 -64- 57.44	NHPP-0064 (497)D	KANAWHA	XX	XX

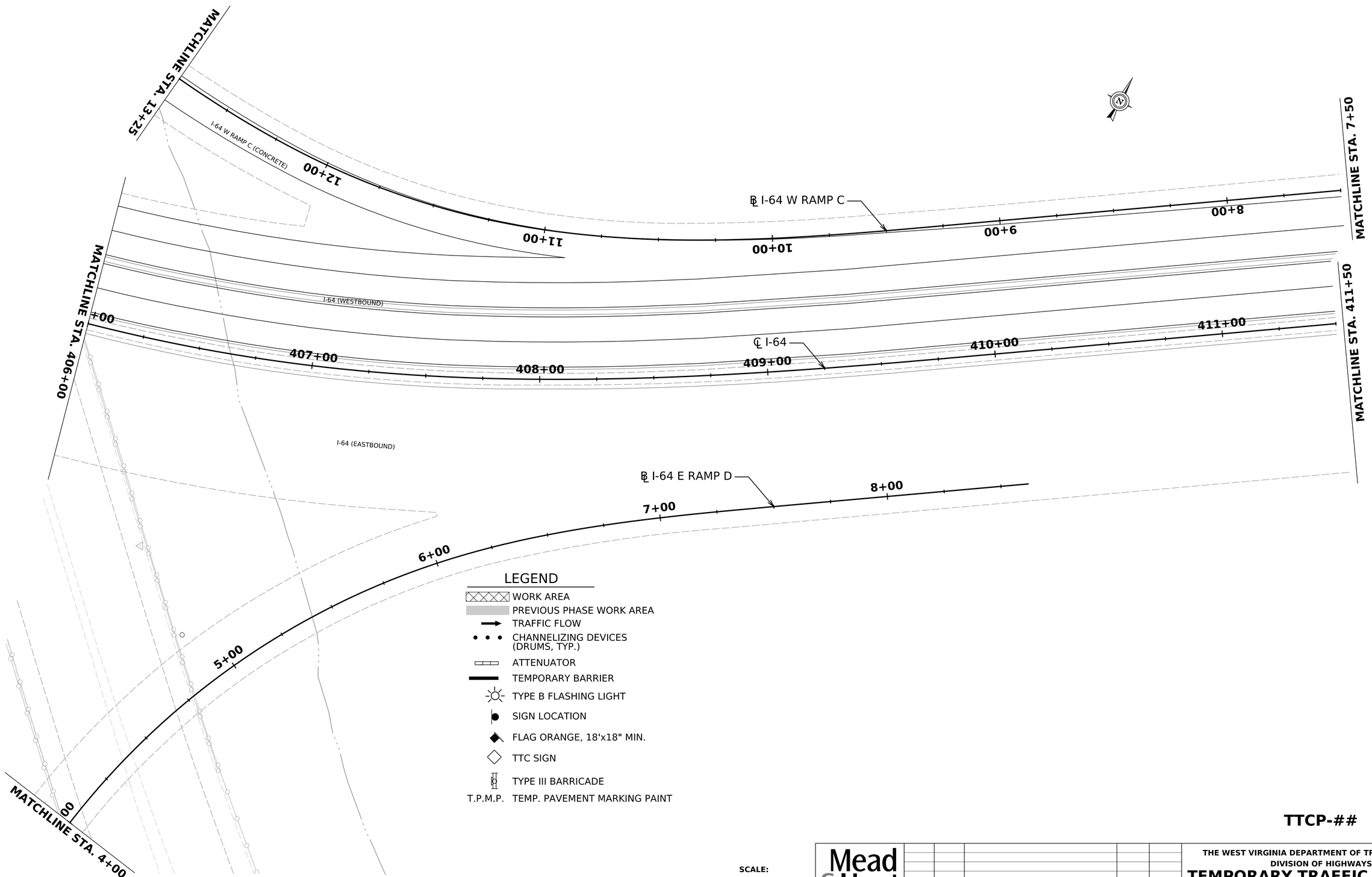

TTCP-##

SCALE:
0 20 ft

Mead & Hunt

REVISION NUMBER	SHEET NUMBER	REVISION	DATE	BY

THE WEST VIRGINIA DEPARTMENT OF TRANSPORTATION
DIVISION OF HIGHWAYS

TEMPORARY TRAFFIC CONTROL PHASE 1

11-DEC-2025

J04C23C03-PLAN

X:\S2411000\2519\11\TECH\Roadway\Sheets\MOT\TC_Phase 1 Plan Sheets_eugene carter bridge.dgn

219 lbs

Public Roads Div.	State Dist. No.	State Project No.	Federal Project No.	County	Sheet No.	Total Sheets
W.V.	01	S320 -64- 57.44	NHPP-0064 (497)D	KANAWHA	XX	XX

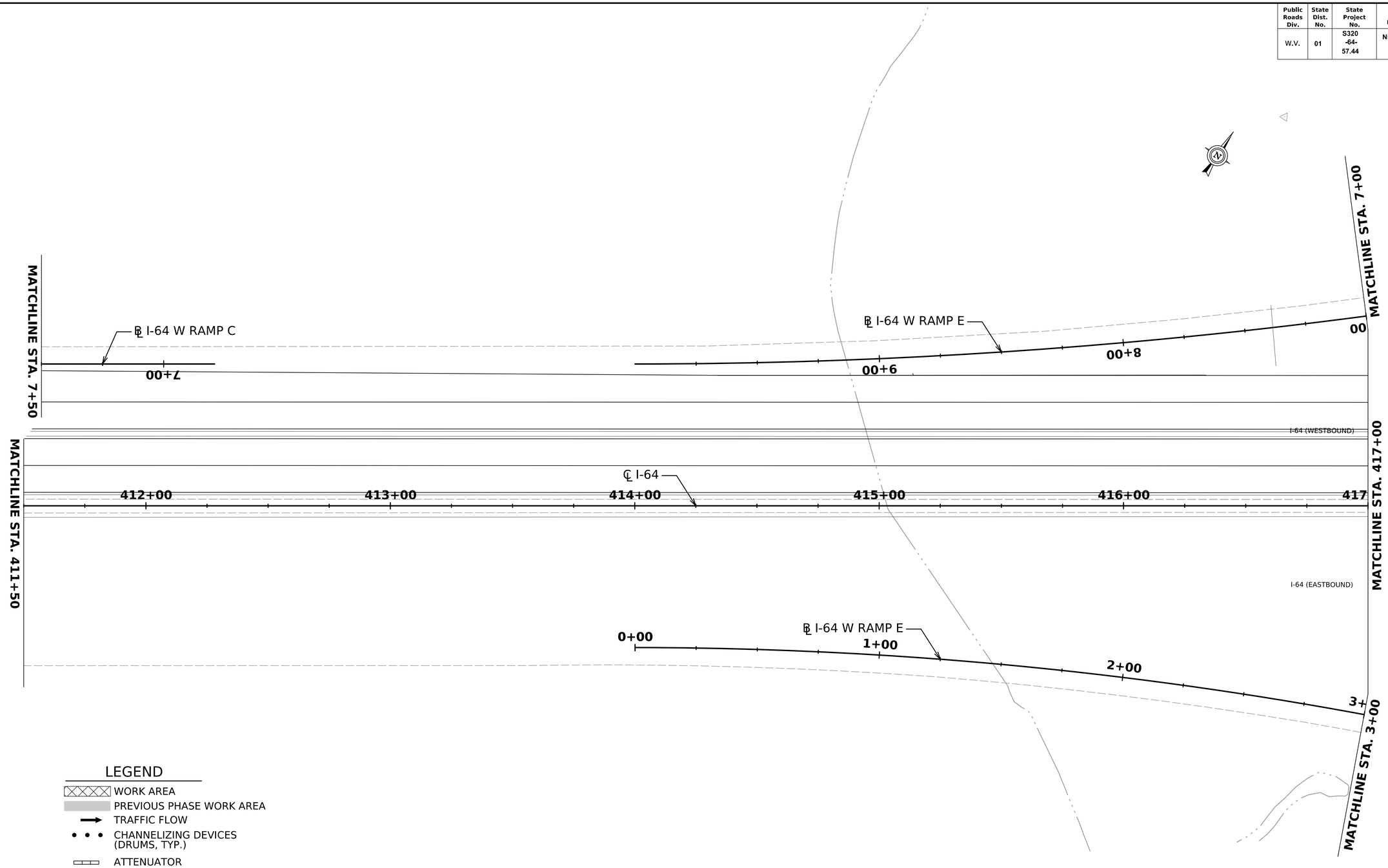

LEGEND

- WORK AREA
- PREVIOUS PHASE WORK AREA
- TRAFFIC FLOW
- CHANNELIZING DEVICES (DRUMS, TYP.)
- ATTENUATOR
- TEMPORARY BARRIER
- TYPE B FLASHING LIGHT
- SIGN LOCATION
- FLAG ORANGE, 18'x18" MIN.
- TTC SIGN
- TYPE III BARRICADE
- T.P.M.P. TEMP. PAVEMENT MARKING PAINT

SCALE:

0 20 ft

TTCP-##

Mead & Hunt

REVISION NUMBER	SHEET NUMBER	REVISION	DATE	BY

THE WEST VIRGINIA DEPARTMENT OF TRANSPORTATION
DIVISION OF HIGHWAYS

TEMPORARY TRAFFIC CONTROL PHASE 1

11-DEC-2025

J04C23C03-PLAN

X:\S24\0000\S9\17\TTC\SHRoadway\Sheets\MOT\ttcp_phase 1 plan sheets_engine center bridge.dgn

213196

Public Roads Div.	State Dist. No.	State Project No.	Federal Project No.	County	Sheet No.	Total Sheets
W.V.	01	S320 -64- 57.44	NHPP-0064 (497)D	KANAWHA	XX	XX

LEGEND

- WORK AREA
- PREVIOUS PHASE WORK AREA
- TRAFFIC FLOW
- CHANNELIZING DEVICES (DRUMS, TYP.)
- ATTENUATOR
- TEMPORARY BARRIER
- TYPE B FLASHING LIGHT
- SIGN LOCATION
- FLAG ORANGE, 18'x18" MIN.
- TTC SIGN
- TYPE III BARRICADE
- T.P.M.P. TEMP. PAVEMENT MARKING PAINT

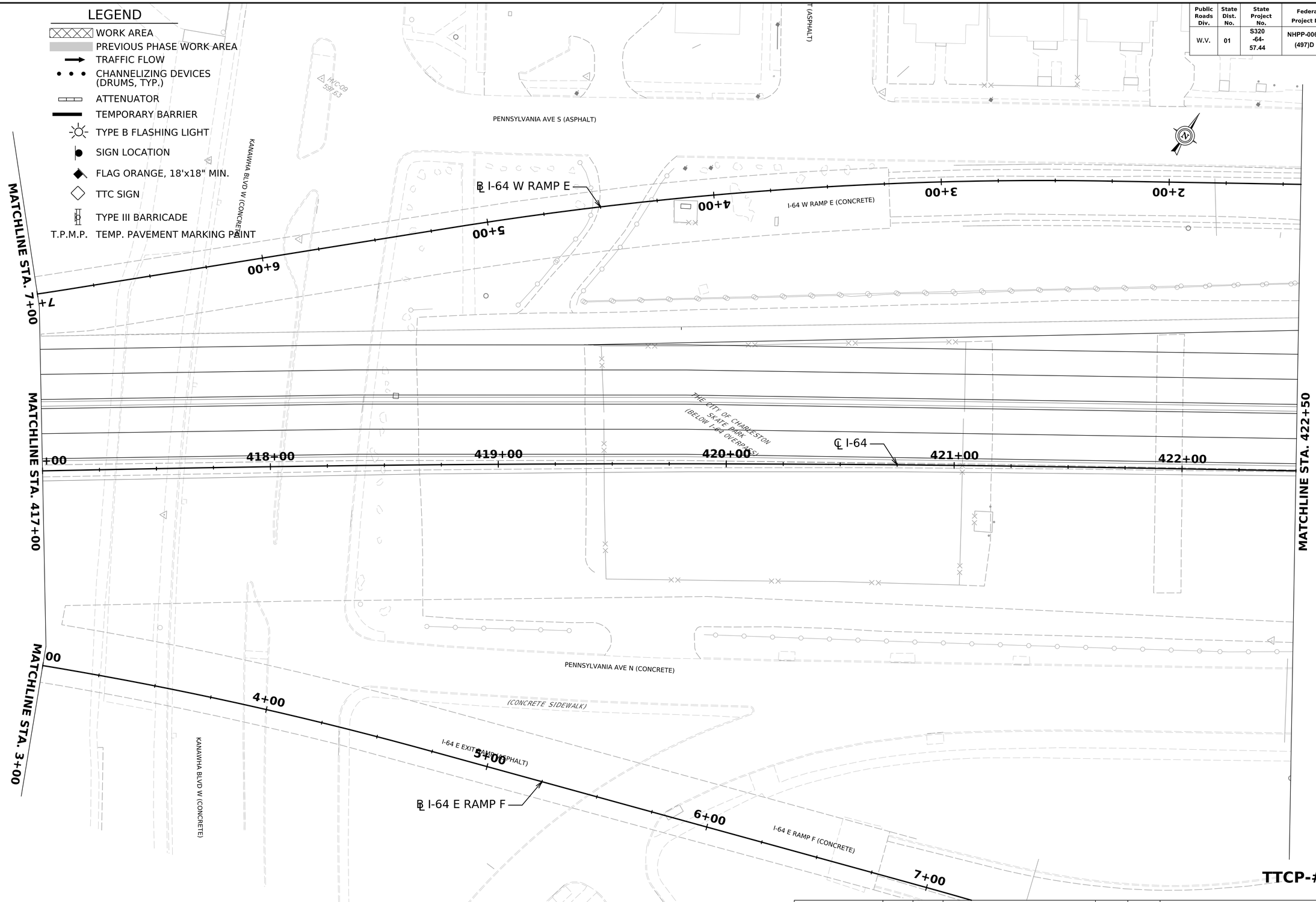

SCALE:
0 20 ft

Mead & Hunt

REVISION NUMBER	SHEET NUMBER	REVISION	DATE	BY

THE WEST VIRGINIA DEPARTMENT OF TRANSPORTATION
DIVISION OF HIGHWAYS

TEMPORARY TRAFFIC CONTROL PHASE 1

11-DEC-2025

J04C23C03-PLAN

Public Roads Div.	State Dist. No.	State Project No.	Federal Project No.	County	Sheet No.	Total Sheets
W.V.	01	S320 -64- 57.44	NHPP-0064 (497)D	KANAWHA	XX	XX

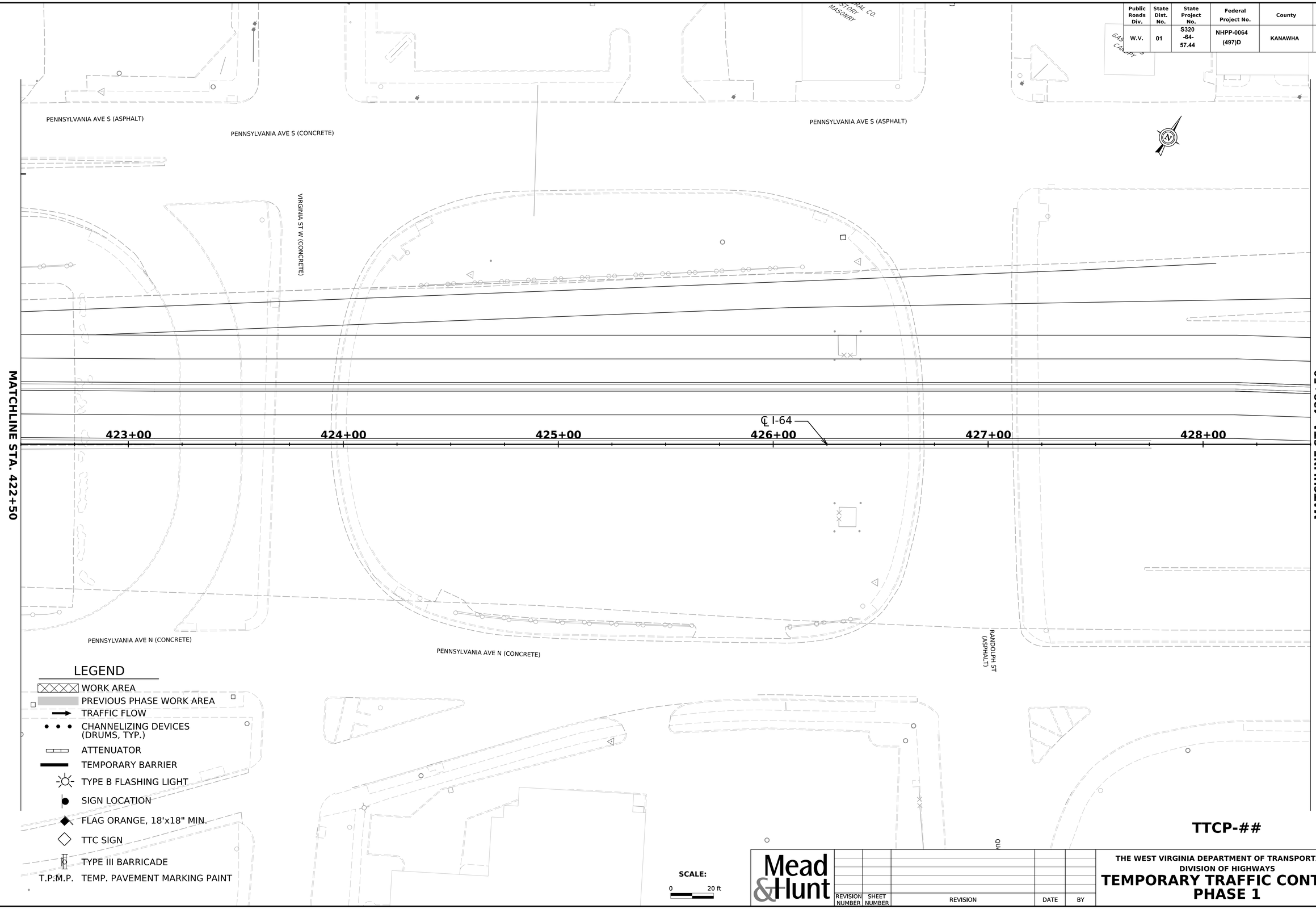

TTCP-##

Mead & Hunt

REVISION NUMBER	SHEET NUMBER	REVISION	DATE	BY

THE WEST VIRGINIA DEPARTMENT OF TRANSPORTATION
DIVISION OF HIGHWAYS

TEMPORARY TRAFFIC CONTROL PHASE 1

11-DEC-2025

J04C23C03-PLAN

Public Roads Div.	State Dist. No.	State Project No.	Federal Project No.	County	Sheet No.	Total Sheets
W.V.	01	S320 -64- 57.44	NHPP-0064 (497)D	KANAWHA	XX	XX

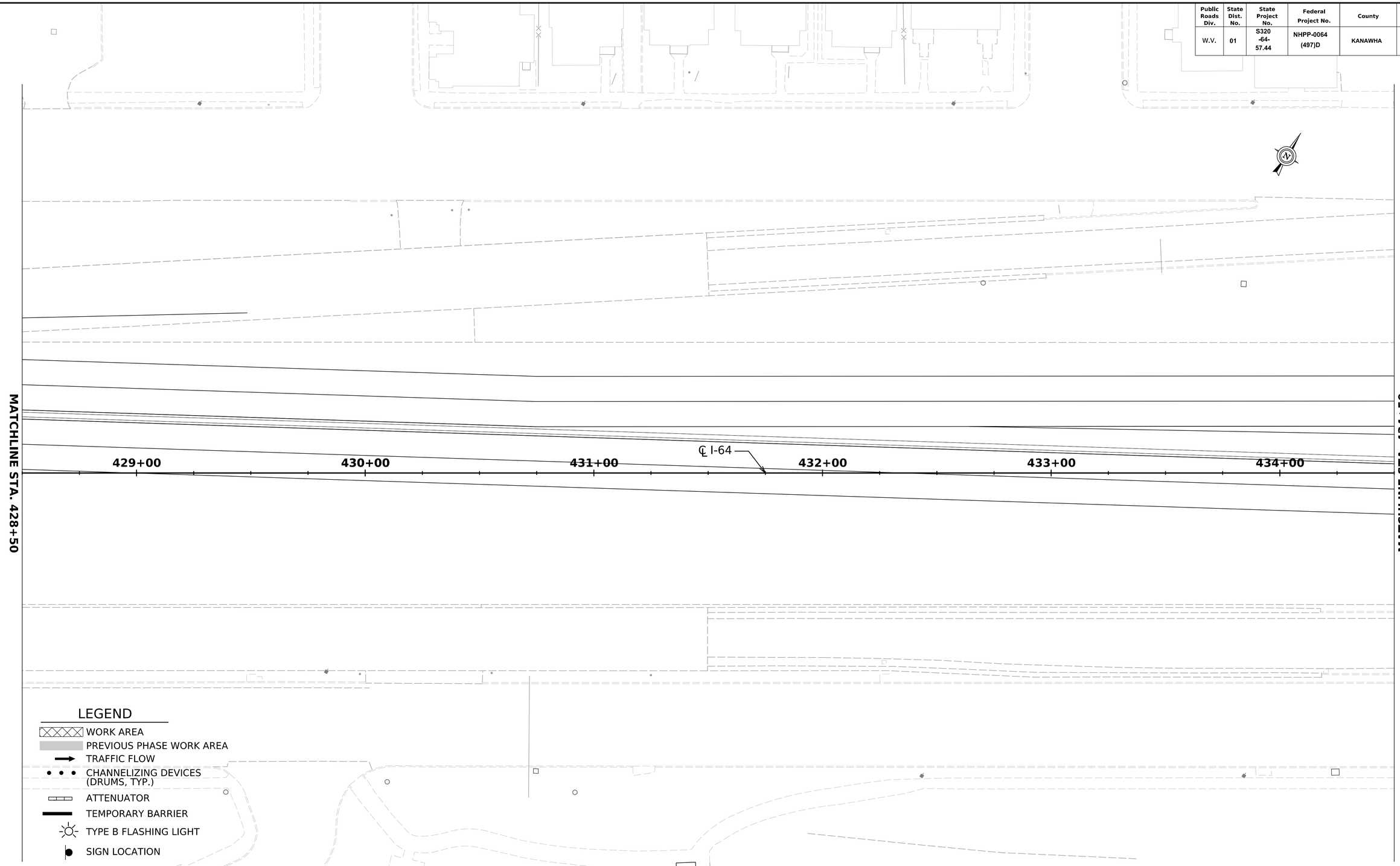

LEGEND

- WORK AREA
- PREVIOUS PHASE WORK AREA
- TRAFFIC FLOW
- CHANNELIZING DEVICES (DRUMS, TYP.)
- ATTENUATOR
- TEMPORARY BARRIER
- TYPE B FLASHING LIGHT
- SIGN LOCATION
- FLAG ORANGE, 18'x18" MIN.
- TTC SIGN
- TYPE III BARRICADE
- T.P.M.P. TEMP. PAVEMENT MARKING PAINT

SCALE:
0 20 ft

TTCP-##

Mead & Hunt

REVISION NUMBER	SHEET NUMBER	REVISION	DATE	BY

THE WEST VIRGINIA DEPARTMENT OF TRANSPORTATION
DIVISION OF HIGHWAYS

TEMPORARY TRAFFIC CONTROL PHASE 1

11-DEC-2025

J04C23C03-PLAN

Public Roads Div.	State Dist. No.	State Project No.	Federal Project No.	County	Sheet No.	Total Sheets
W.V.	01	S320 -64- 57.44	NHPP-0064 (497)D	KANAWHA	XX	XX

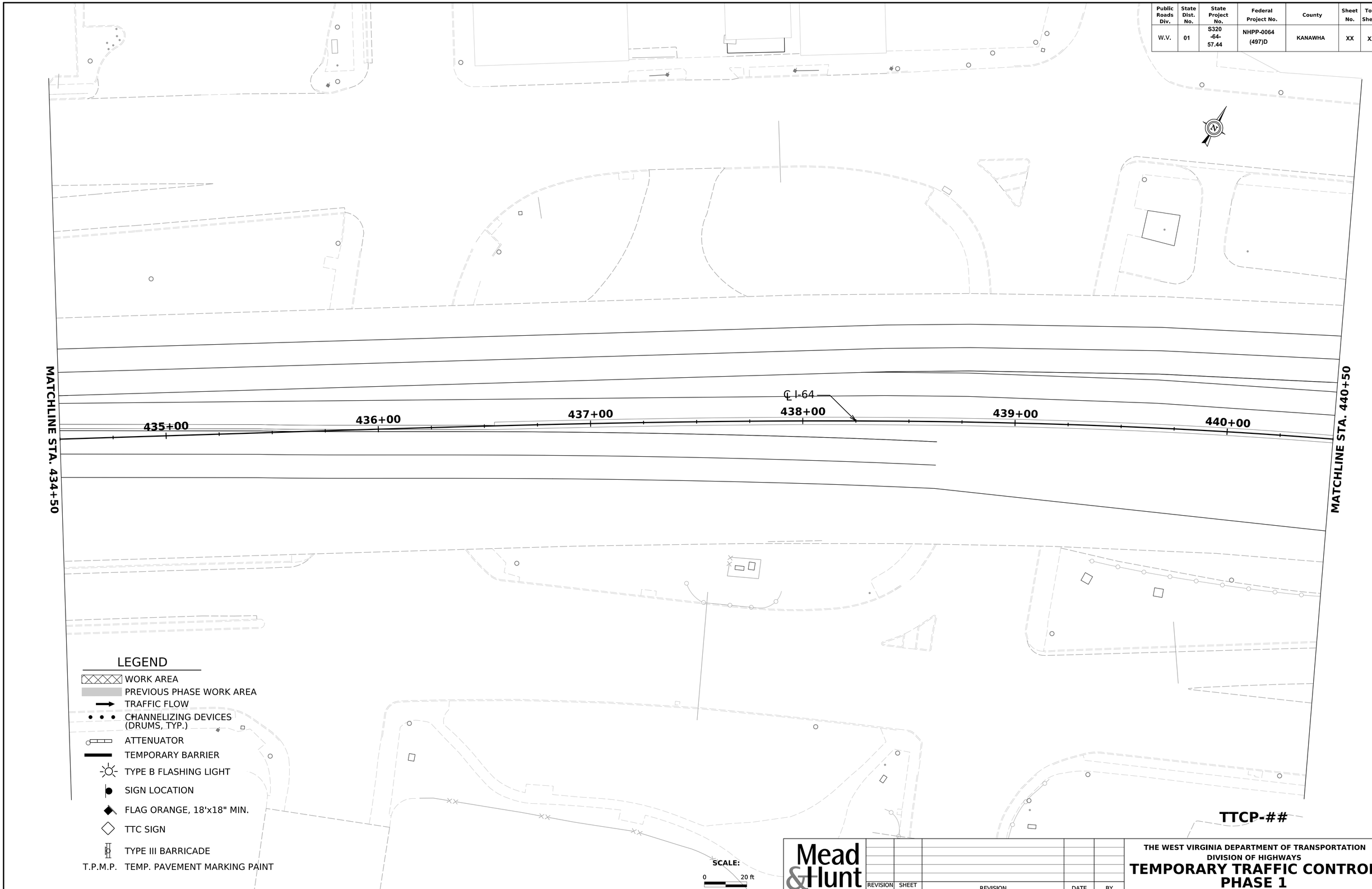

Mead & Hunt

REVISION NUMBER	SHEET NUMBER	REVISION	DATE	BY

THE WEST VIRGINIA DEPARTMENT OF TRANSPORTATION
DIVISION OF HIGHWAYS

TEMPORARY TRAFFIC CONTROL PHASE 1

11-DEC-2025

J04C23C03-PLAN

Public Roads Div.	State Dist. No.	State Project No.	Federal Project No.	County	Sheet No.	Total Sheets
W.V.	01	S320 -64- 57.44	NHPP-0064 (497)D	KANAWHA	XX	XX

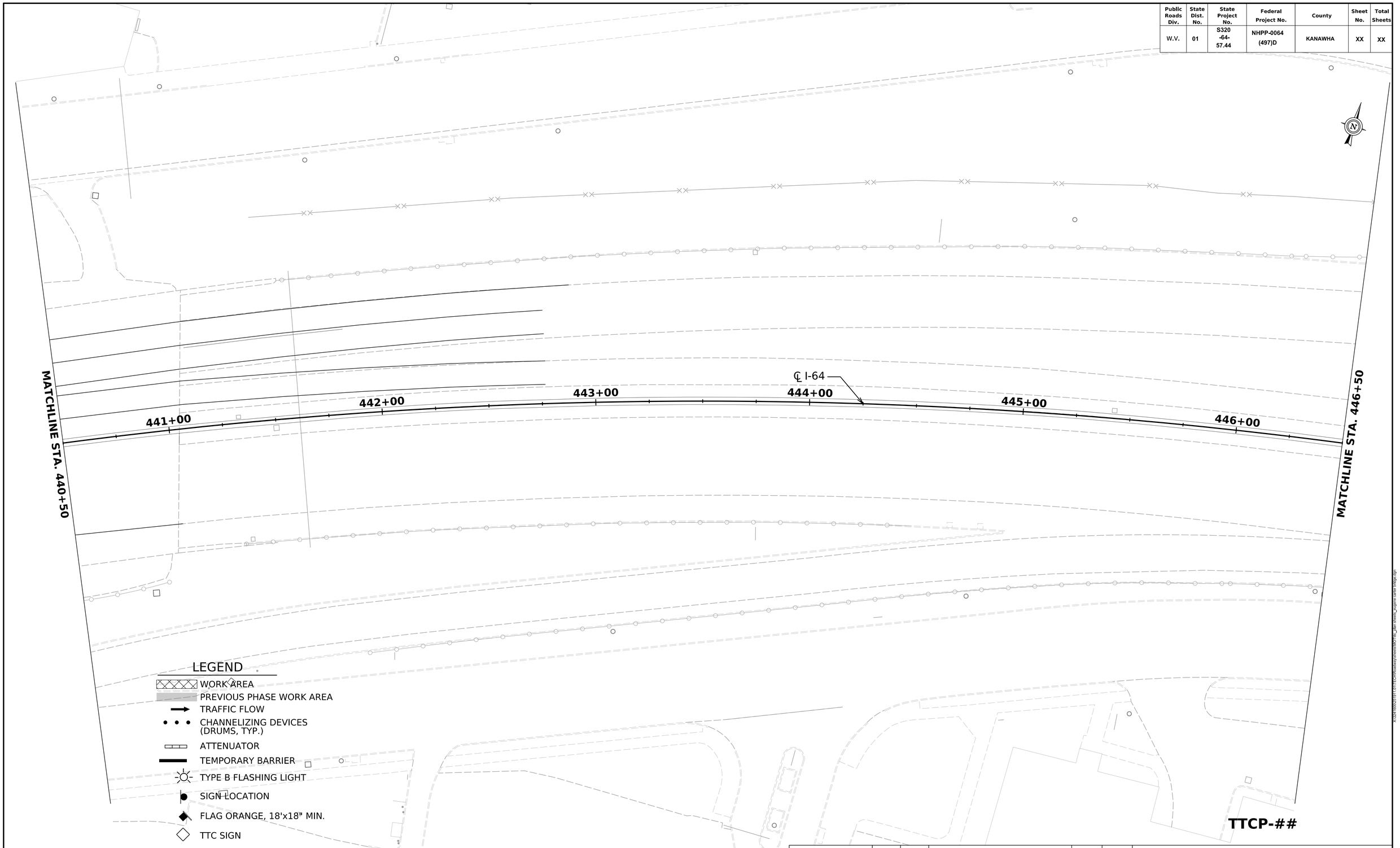

Mead & Hunt

REVISION NUMBER	SHEET NUMBER	REVISION	DATE	BY

THE WEST VIRGINIA DEPARTMENT OF TRANSPORTATION
DIVISION OF HIGHWAYS

TEMPORARY TRAFFIC CONTROL PHASE 1

11-DEC-2025

J04C23C03-PLAN

Public Roads Div.	State Dist. No.	State Project No.	Federal Project No.	County	Sheet No.	Total Sheets
W.V.	01	S320 -64- 57.44	NHPP-0064 (497)D	KANAWHA	XX	XX

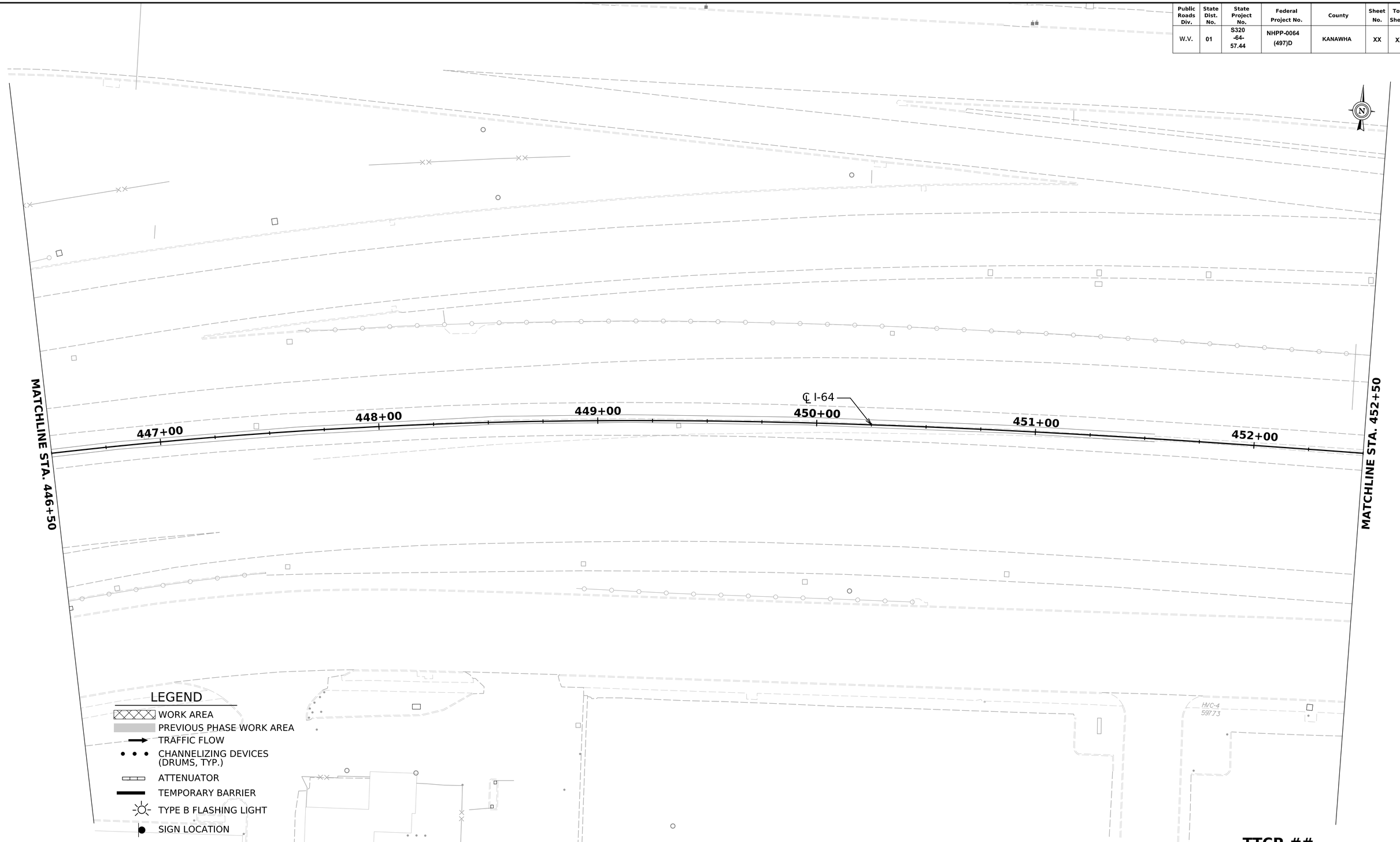

11-DEC-2025

Mead & Hunt

REVISION NUMBER	SHEET NUMBER	REVISION	DATE	BY

THE WEST VIRGINIA DEPARTMENT OF TRANSPORTATION
DIVISION OF HIGHWAYS

TEMPORARY TRAFFIC CONTROL PHASE 1

J04C23C03-PLAN

2191Sb

Public Roads Div.	State Dist. No.	State Project No.	Federal Project No.	County	Sheet No.	Total Sheets
W.V.	01	S320 -64- 57.44	NHPP-0064 (497)D	KANAWHA	XX	XX

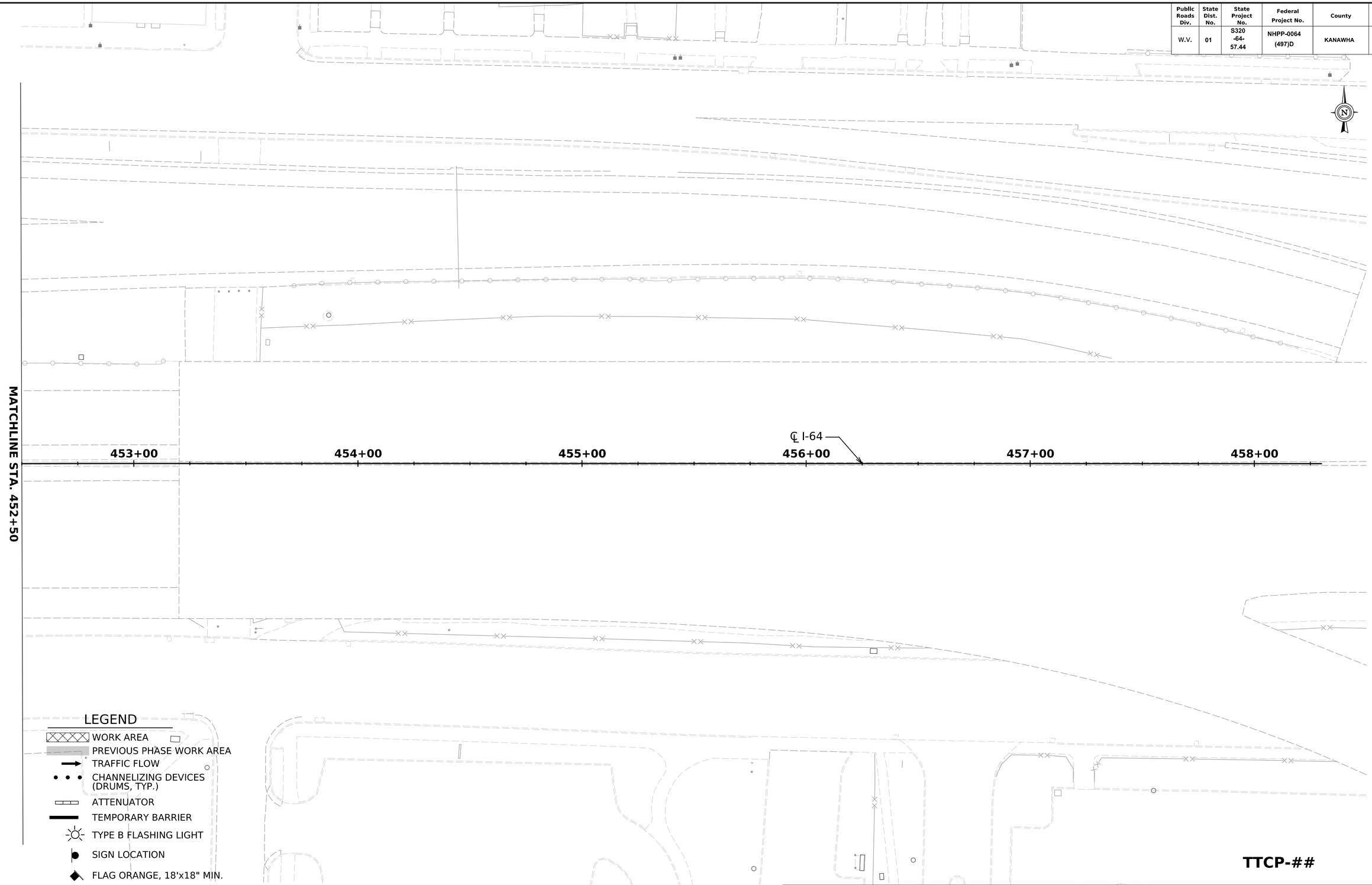

LEGEND

- WORK AREA
- PREVIOUS PHASE WORK AREA
- TRAFFIC FLOW
- CHANNELIZING DEVICES (DRUMS, TYP.)
- ATTENUATOR
- TEMPORARY BARRIER
- TYPE B FLASHING LIGHT
- SIGN LOCATION
- FLAG ORANGE, 18'x18" MIN.
- TTC SIGN
- TYPE III BARRICADE
- T.P.M.P. TEMP. PAVEMENT MARKING PAINT

SCALE:
0 20 ft

TTCP-##

Mead & Hunt

REVISION NUMBER	SHEET NUMBER	REVISION	DATE	BY

THE WEST VIRGINIA DEPARTMENT OF TRANSPORTATION
DIVISION OF HIGHWAYS

TEMPORARY TRAFFIC CONTROL PHASE 1

11-DEC-2025

J04C23C03-PLAN

2:\91\ga

Public Roads Div.	State Dist. No.	State Project No.	Federal Project No.	County	Sheet No.	Total Sheets
W.V.	01	S320 -64- 57.44	NHPP-0064 (497)D	KANAWHA	XX	XX

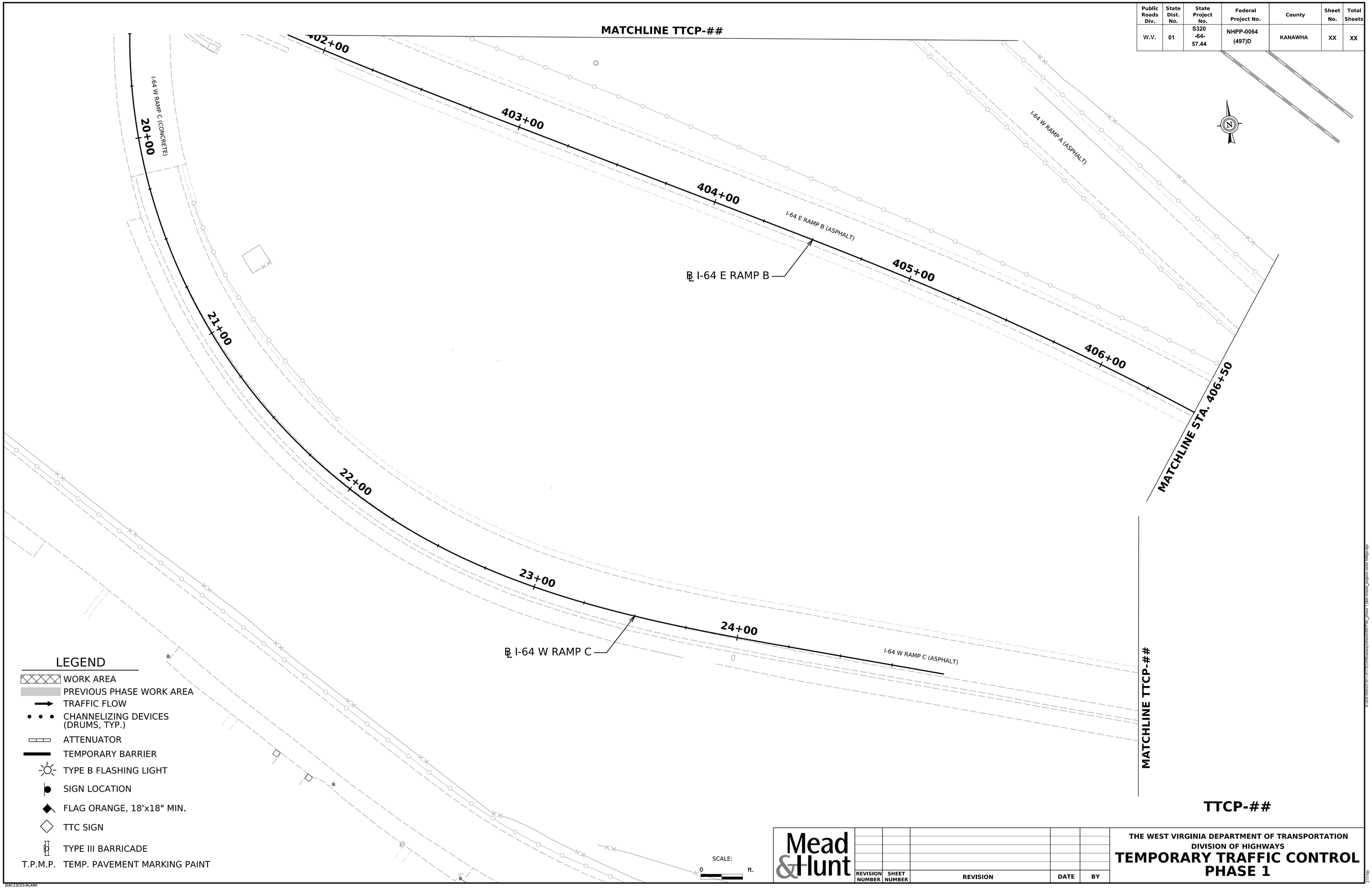

TTCP-##

11-DEC-2025

Mead & Hunt

REVISION NUMBER	SHEET NUMBER	REVISION	DATE	BY

THE WEST VIRGINIA DEPARTMENT OF TRANSPORTATION
DIVISION OF HIGHWAYS

TEMPORARY TRAFFIC CONTROL PHASE 1

J04C23C03-BLANK

Public Roads Div.	State Dist. No.	State Project No.	Federal Project No.	County	Sheet No.	Total Sheets
W.V.	01	S320 -64- 57.44	NHPP-0064 (497)D	KANAWHA	XX	XX

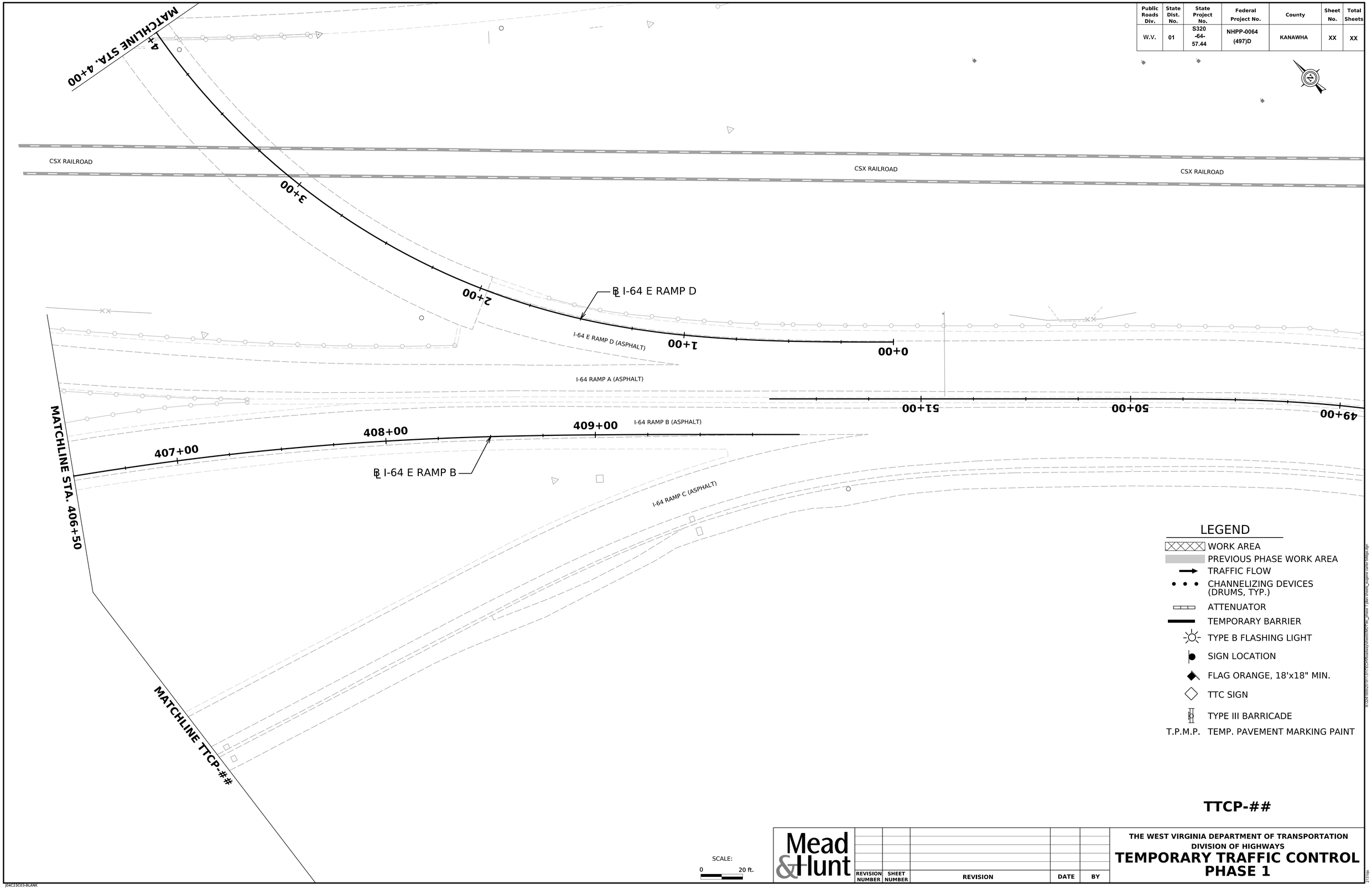

Mead & Hunt

REVISION NUMBER	SHEET NUMBER	REVISION	DATE	BY

THE WEST VIRGINIA DEPARTMENT OF TRANSPORTATION
DIVISION OF HIGHWAYS

TEMPORARY TRAFFIC CONTROL PHASE 1

11-DEC-2025

J04C23C03-BLANK

X:\S240\0002\5917.01\TECH\Roadway\Sheets\MOT_Rec\phase 1 plan sheets_engine carter bridge.dgn

213196

Public Roads Div.	State Dist. No.	State Project No.	Federal Project No.	County	Sheet No.	Total Sheets
W.V.	01	S320 -64- 57.44	NHPP-0064 (497)D	KANAWHA	XX	XX

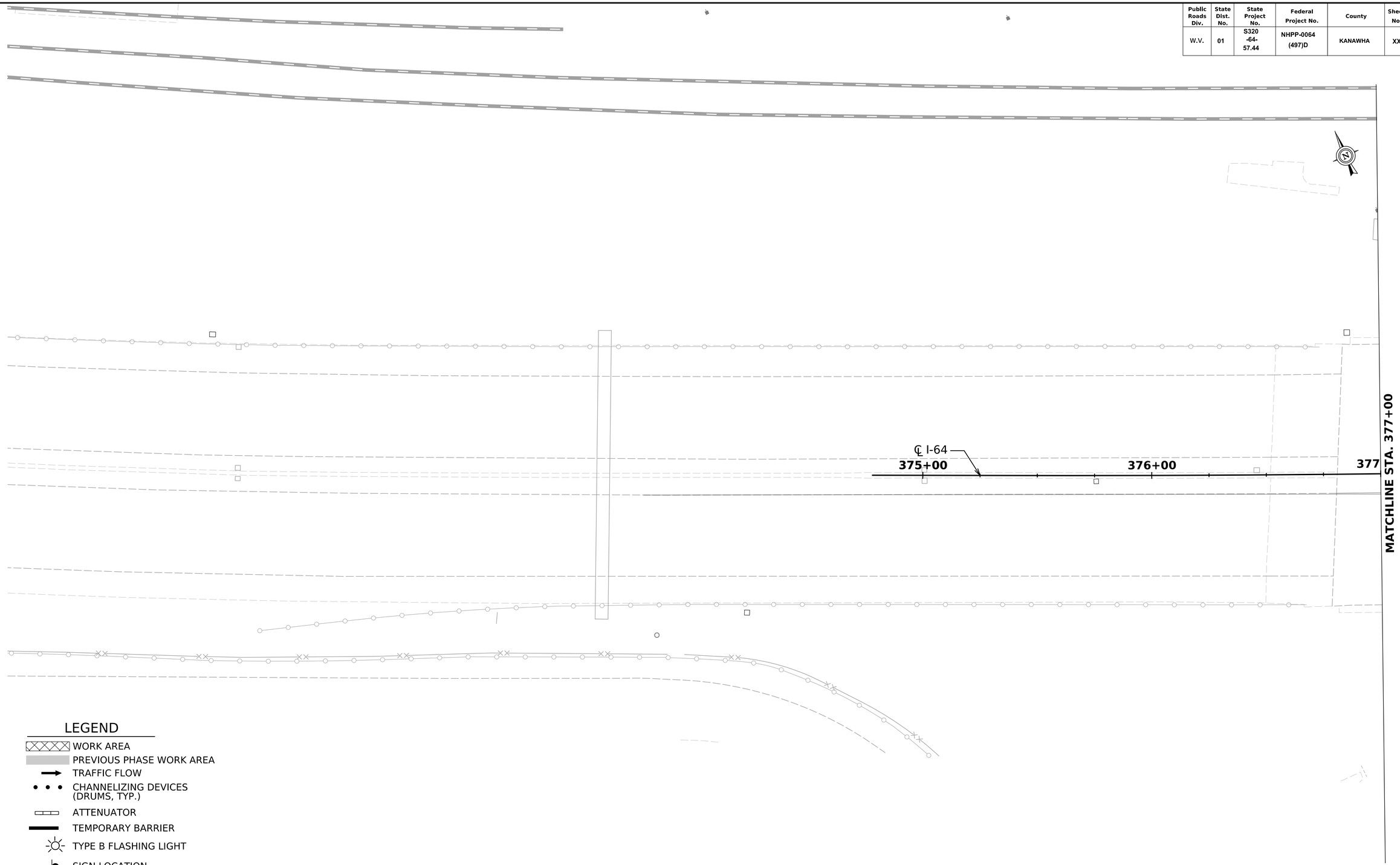

LEGEND

- WORK AREA
- PREVIOUS PHASE WORK AREA
- TRAFFIC FLOW
- CHANNELIZING DEVICES (DRUMS, TYP.)
- ATTENUATOR
- TEMPORARY BARRIER
- TYPE B FLASHING LIGHT
- SIGN LOCATION
- FLAG ORANGE, 18'x18" MIN.
- TTC SIGN
- TYPE III BARRICADE
- T.P.M.P. TEMP. PAVEMENT MARKING PAINT

TTCP-##

SCALE:

0 20 ft

Mead & Hunt

REVISION NUMBER	SHEET NUMBER	REVISION	DATE	BY

THE WEST VIRGINIA DEPARTMENT OF TRANSPORTATION
DIVISION OF HIGHWAYS

TEMPORARY TRAFFIC CONTROL PHASE 2

11-DEC-2025

J04C23C03-PLAN

2131bs

A:\2041160\05191\INTE\PRoadway\sheets\MOT\Phase 2 plan sheets_Eugene carter bridge.dgn

Public Roads Div.	State Dist. No.	State Project No.	Federal Project No.	County	Sheet No.	Total Sheets
W.V.	01	S320 -64- 57.44	NHPP-0064 (497)D	KANAWHA	XX	XX

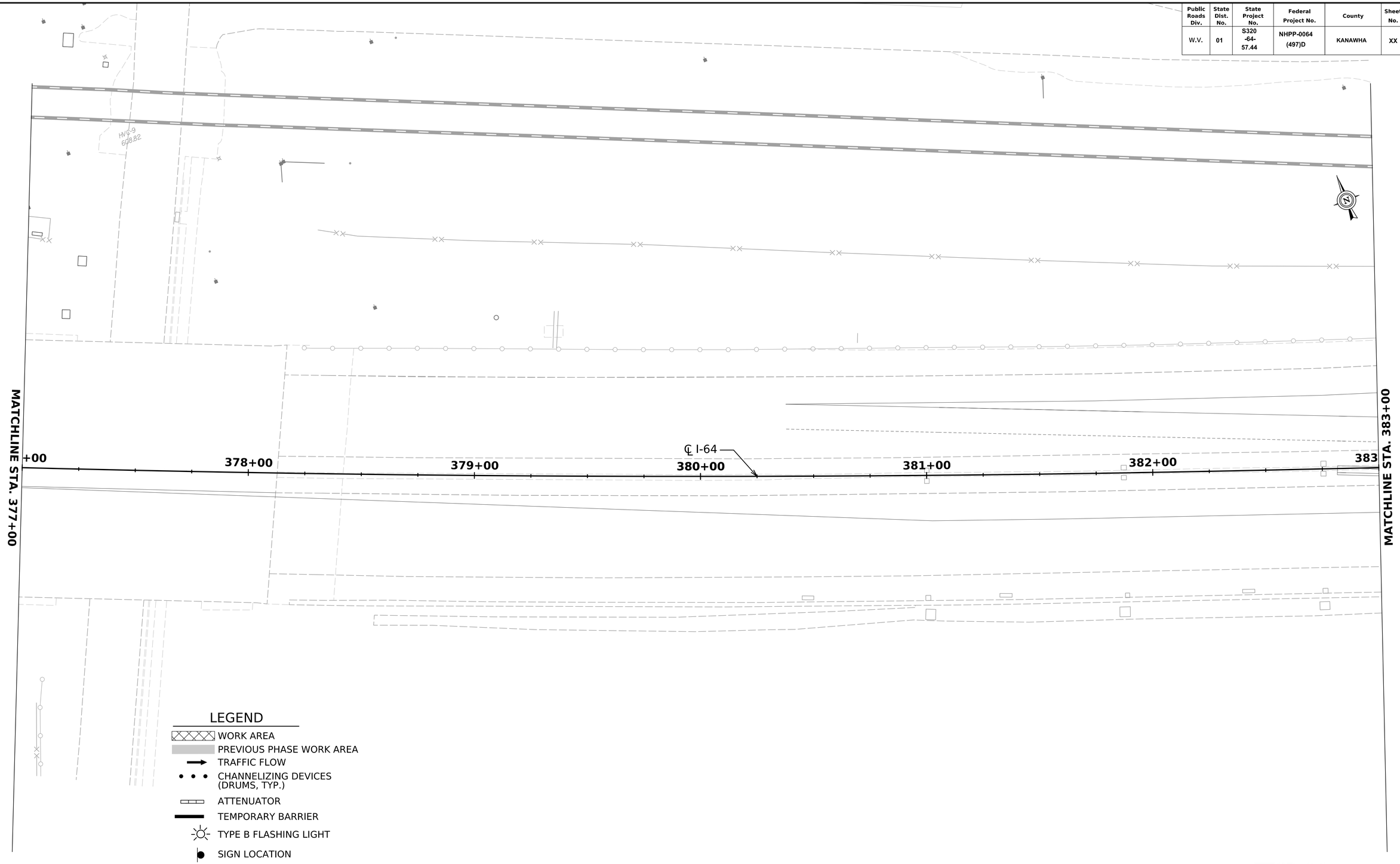

TTCP-##

SCALE:

0 20 ft

Mead & Hunt

REVISION NUMBER	SHEET NUMBER	REVISION	DATE	BY

THE WEST VIRGINIA DEPARTMENT OF TRANSPORTATION
DIVISION OF HIGHWAYS

TEMPORARY TRAFFIC CONTROL PHASE 2

11-DEC-2025

J04C23C03-PLAN

231196

Public Roads Div.	State Dist. No.	State Project No.	Federal Project No.	County	Sheet No.	Total Sheets
W.V.	01	S320 -64- 57.44	NHPP-0064 (497)D	KANAWHA	XX	XX

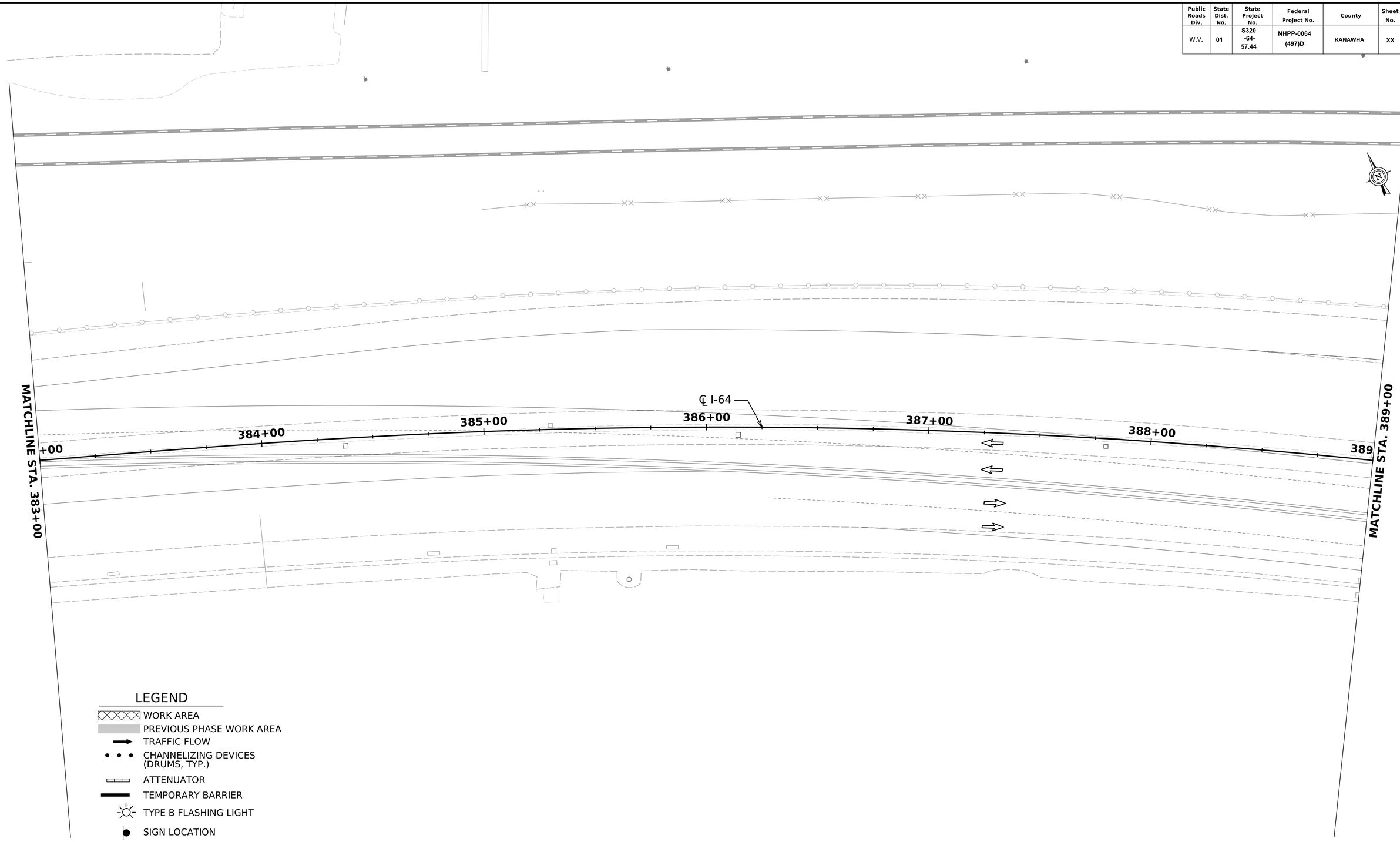

LEGEND

- WORK AREA
- PREVIOUS PHASE WORK AREA
- TRAFFIC FLOW
- CHANNELIZING DEVICES (DRUMS, TYP.)
- ATTENUATOR
- TEMPORARY BARRIER
- TYPE B FLASHING LIGHT
- SIGN LOCATION
- FLAG ORANGE, 18'x18" MIN.
- TTC SIGN
- TYPE III BARRICADE
- T.P.M.P. TEMP. PAVEMENT MARKING PAINT

TTCP-##

SCALE:

0 20 ft

Mead & Hunt

REVISION NUMBER	SHEET NUMBER	REVISION	DATE	BY

THE WEST VIRGINIA DEPARTMENT OF TRANSPORTATION
DIVISION OF HIGHWAYS

TEMPORARY TRAFFIC CONTROL PHASE 2

11-DEC-2025

J04C23C03-PLAN

X:\Sites\80\025\91\TTC\PRoadway\Header\MDT_Header_Phase 2 plan sheets_Eugene carter Bridge.dgn

2191ba

Public Roads Div.	State Dist. No.	State Project No.	Federal Project No.	County	Sheet No.	Total Sheets
W.V.	01	S320 -64- 57.44	NHPP-0064 (497)D	KANAWHA	XX	XX

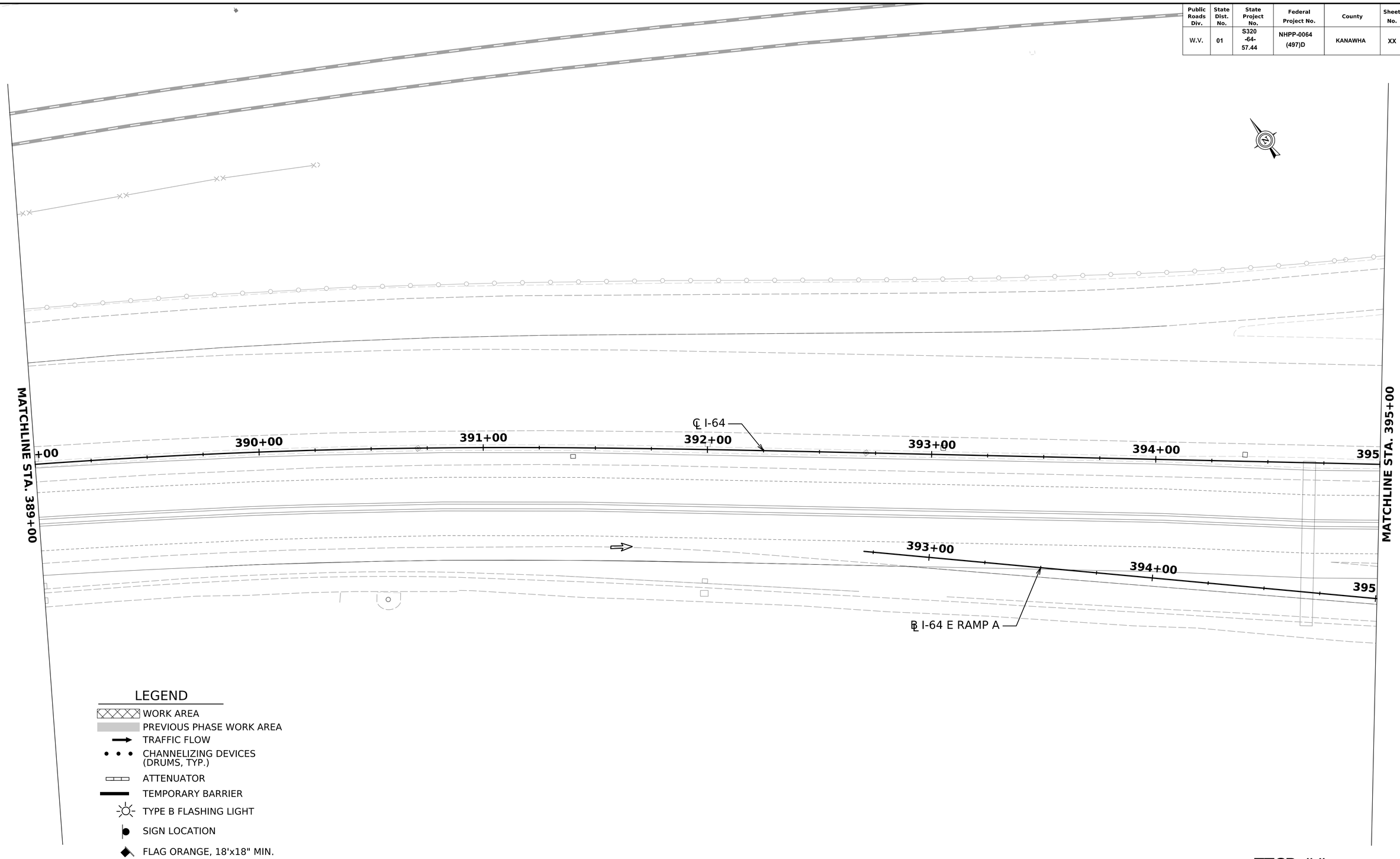

LEGEND

- WORK AREA
- PREVIOUS PHASE WORK AREA
- TRAFFIC FLOW
- CHANNELIZING DEVICES (DRUMS, TYP.)
- ATTENUATOR
- TEMPORARY BARRIER
- TYPE B FLASHING LIGHT
- SIGN LOCATION
- FLAG ORANGE, 18'x18" MIN.
- TTC SIGN
- TYPE III BARRICADE
- T.P.M.P. TEMP. PAVEMENT MARKING PAINT

TTCP-##

SCALE:

0 20 ft

Mead & Hunt

REVISION NUMBER	SHEET NUMBER	REVISION	DATE	BY

THE WEST VIRGINIA DEPARTMENT OF TRANSPORTATION
DIVISION OF HIGHWAYS

TEMPORARY TRAFFIC CONTROL PHASE 2

11-DEC-2025

J04C23C03-PLAN

23196

Public Roads Div.	State Dist. No.	State Project No.	Federal Project No.	County	Sheet No.	Total Sheets
W.V.	01	S320 -64- 57.44	NHPP-0064 (497)D	KANAWHA	XX	XX

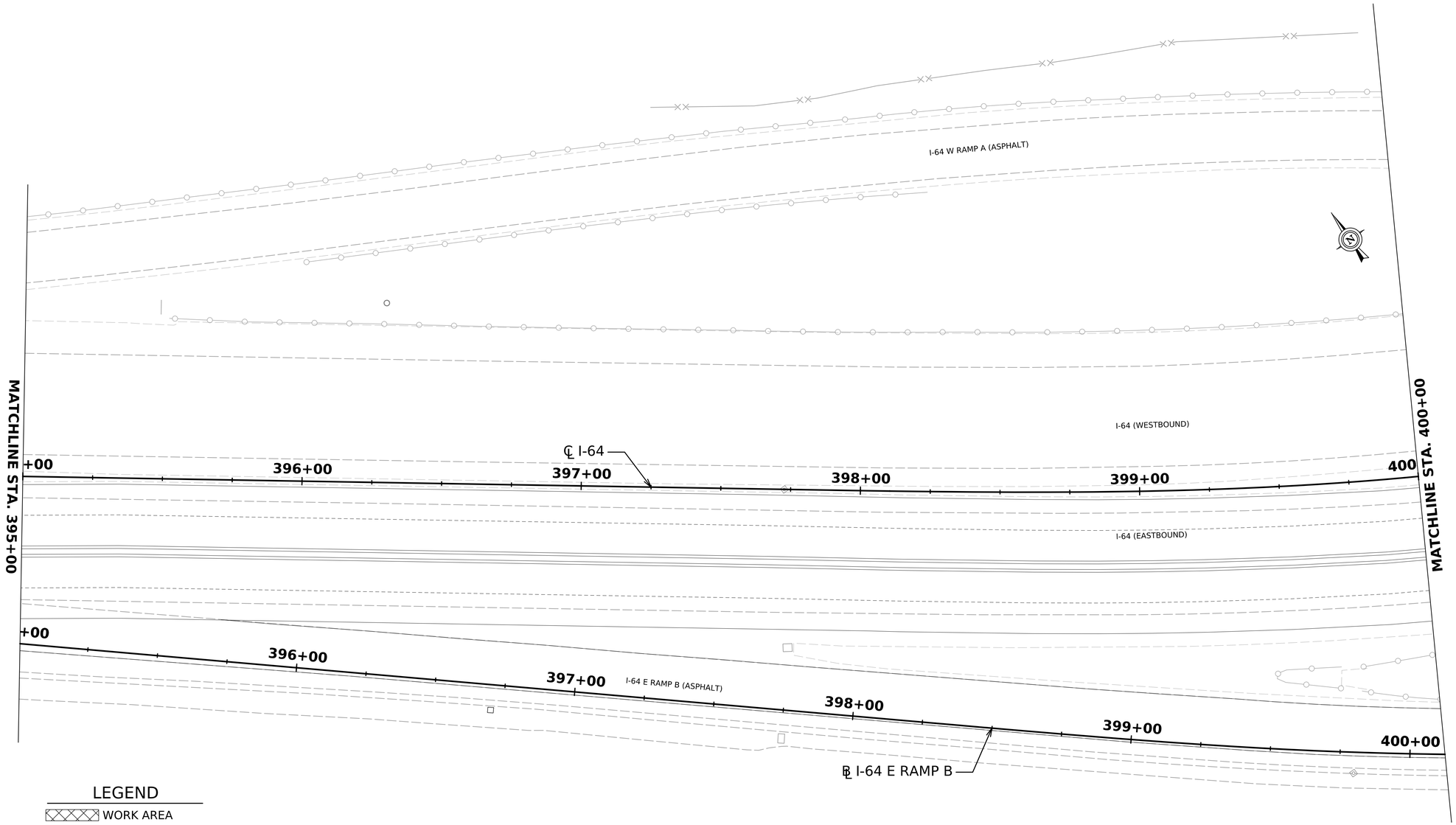

LEGEND

- WORK AREA
- PREVIOUS PHASE WORK AREA
- TRAFFIC FLOW
- CHANNELIZING DEVICES (DRUMS, TYP.)
- ATTENUATOR
- TEMPORARY BARRIER
- TYPE B FLASHING LIGHT
- SIGN LOCATION
- FLAG ORANGE, 18'x18" MIN.
- TTC SIGN
- TYPE III BARRICADE
- T.P.M.P. TEMP. PAVEMENT MARKING PAINT

SCALE:
0 20 ft

TTCP-##

Mead & Hunt

REVISION NUMBER	SHEET NUMBER	REVISION	DATE	BY

THE WEST VIRGINIA DEPARTMENT OF TRANSPORTATION
DIVISION OF HIGHWAYS

TEMPORARY TRAFFIC CONTROL PHASE 2

11-DEC-2025

J04C23C03-PLAN

X:\SE\180062\191\TCP\Roadway\Phase\MOT\tcp_phase 2 plan sheets_engineer center bridge.dgn

219Ba

Public Roads Div.	State Dist. No.	State Project No.	Federal Project No.	County	Sheet No.	Total Sheets
W.V.	01	S320 -64- 57.44	NHPP-0064 (497)D	KANAWHA	XX	XX

LEGEND

- WORK AREA
- PREVIOUS PHASE WORK AREA
- TRAFFIC FLOW
- CHANNELIZING DEVICES (DRUMS, TYP.)
- ATTENUATOR
- TEMPORARY BARRIER
- TYPE B FLASHING LIGHT
- SIGN LOCATION
- FLAG ORANGE, 18'x18" MIN.
- TTC SIGN
- TYPE III BARRICADE
- T.P.M.P. TEMP. PAVEMENT MARKING PAINT

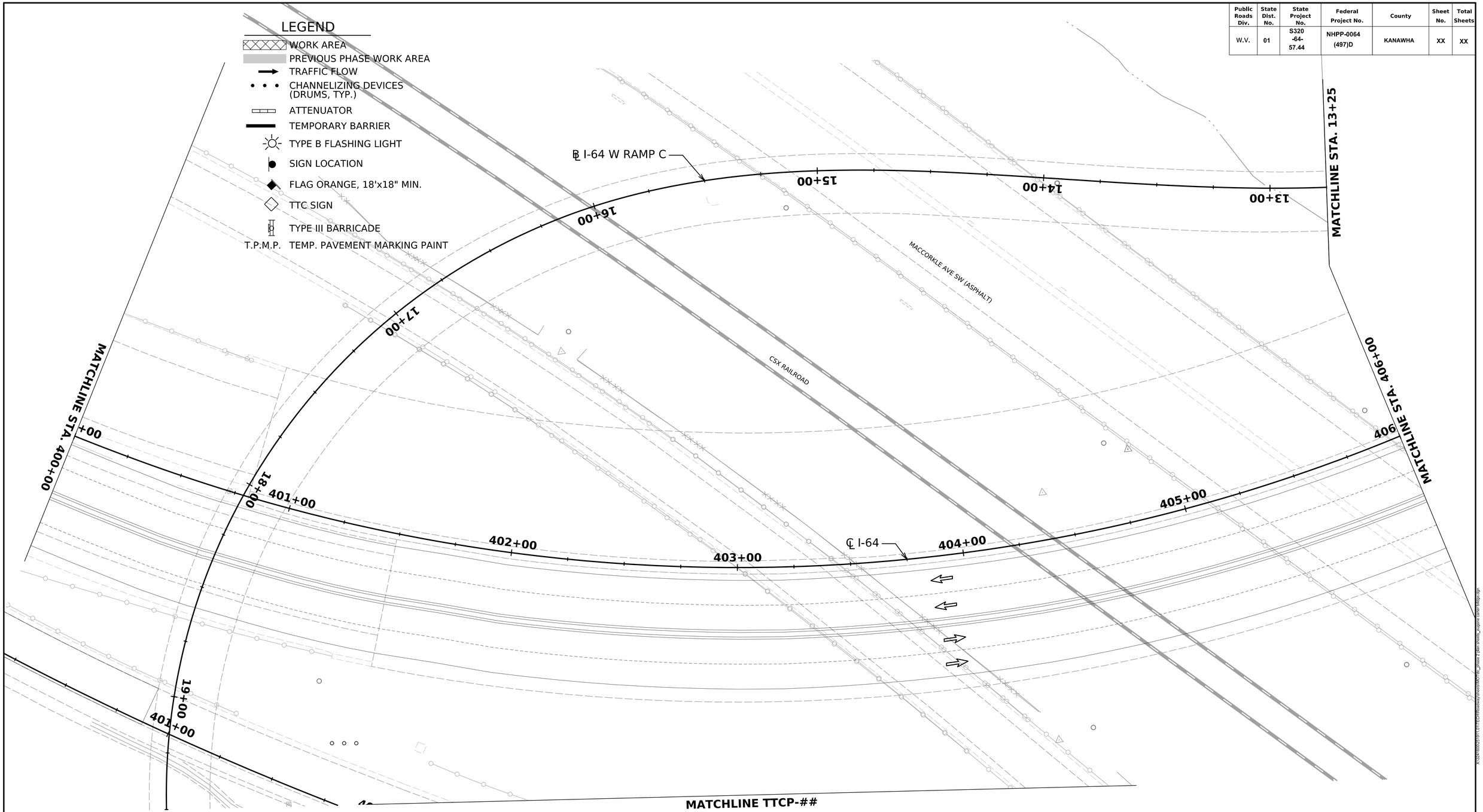

TTCP-##

SCALE:
0 20 ft

Mead & Hunt

REVISION NUMBER	SHEET NUMBER	REVISION	DATE	BY

THE WEST VIRGINIA DEPARTMENT OF TRANSPORTATION
DIVISION OF HIGHWAYS

TEMPORARY TRAFFIC CONTROL PHASE 2

11-DEC-2025

J04C23C03-PLAN

Public Roads Div.	State Dist. No.	State Project No.	Federal Project No.	County	Sheet No.	Total Sheets
W.V.	01	S320 -64- 57.44	NHPP-0064 (497)D	KANAWHA	XX	XX

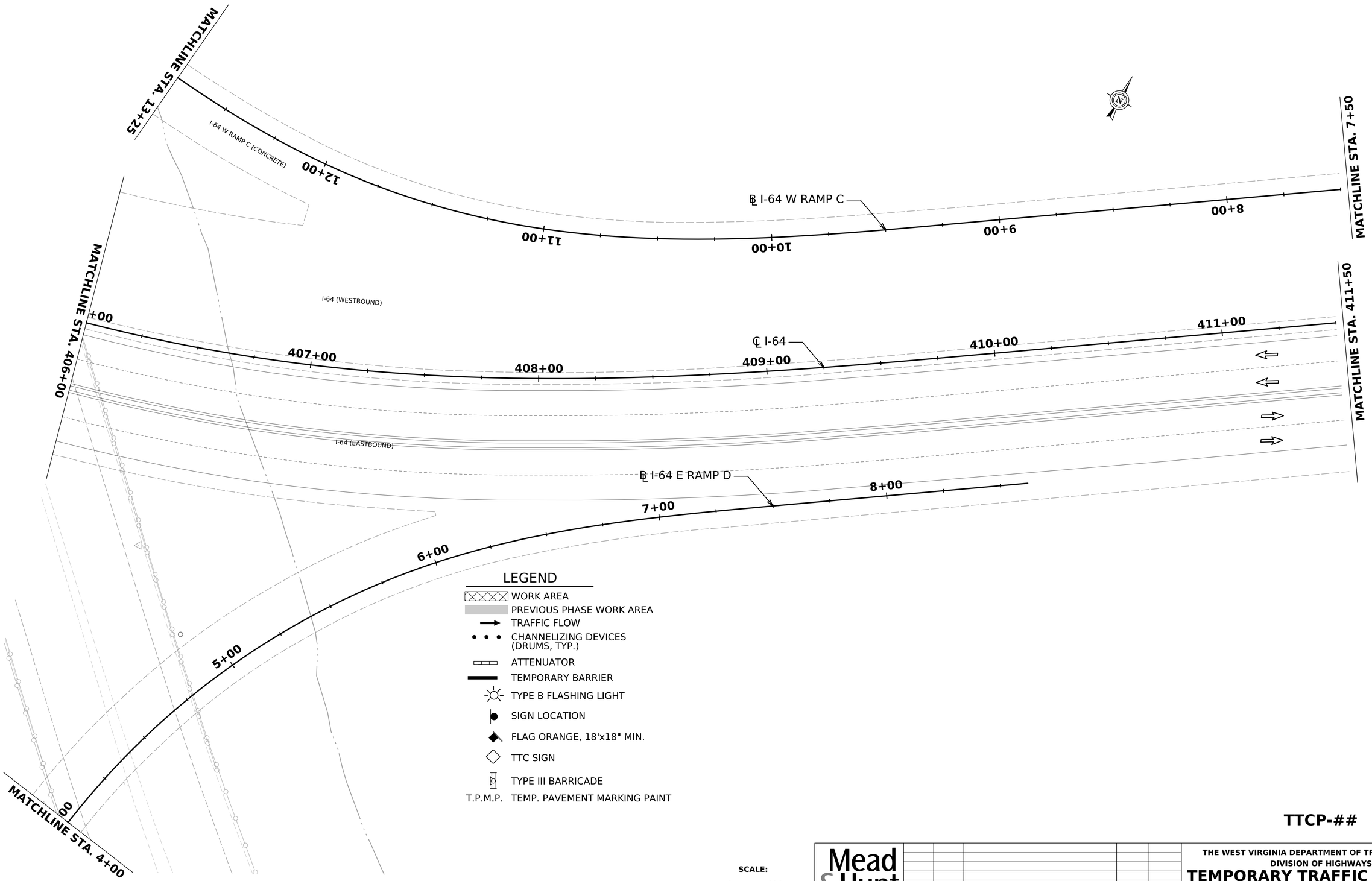

TTCP-##

Mead & Hunt

REVISION NUMBER	SHEET NUMBER	REVISION	DATE	BY

THE WEST VIRGINIA DEPARTMENT OF TRANSPORTATION
DIVISION OF HIGHWAYS

TEMPORARY TRAFFIC CONTROL PHASE 2

11-DEC-2025

J04C23C03-PLAN

2131bs

Public Roads Div.	State Dist. No.	State Project No.	Federal Project No.	County	Sheet No.	Total Sheets
W.V.	01	S320 -64- 57.44	NHPP-0064 (497)D	KANAWHA	XX	XX

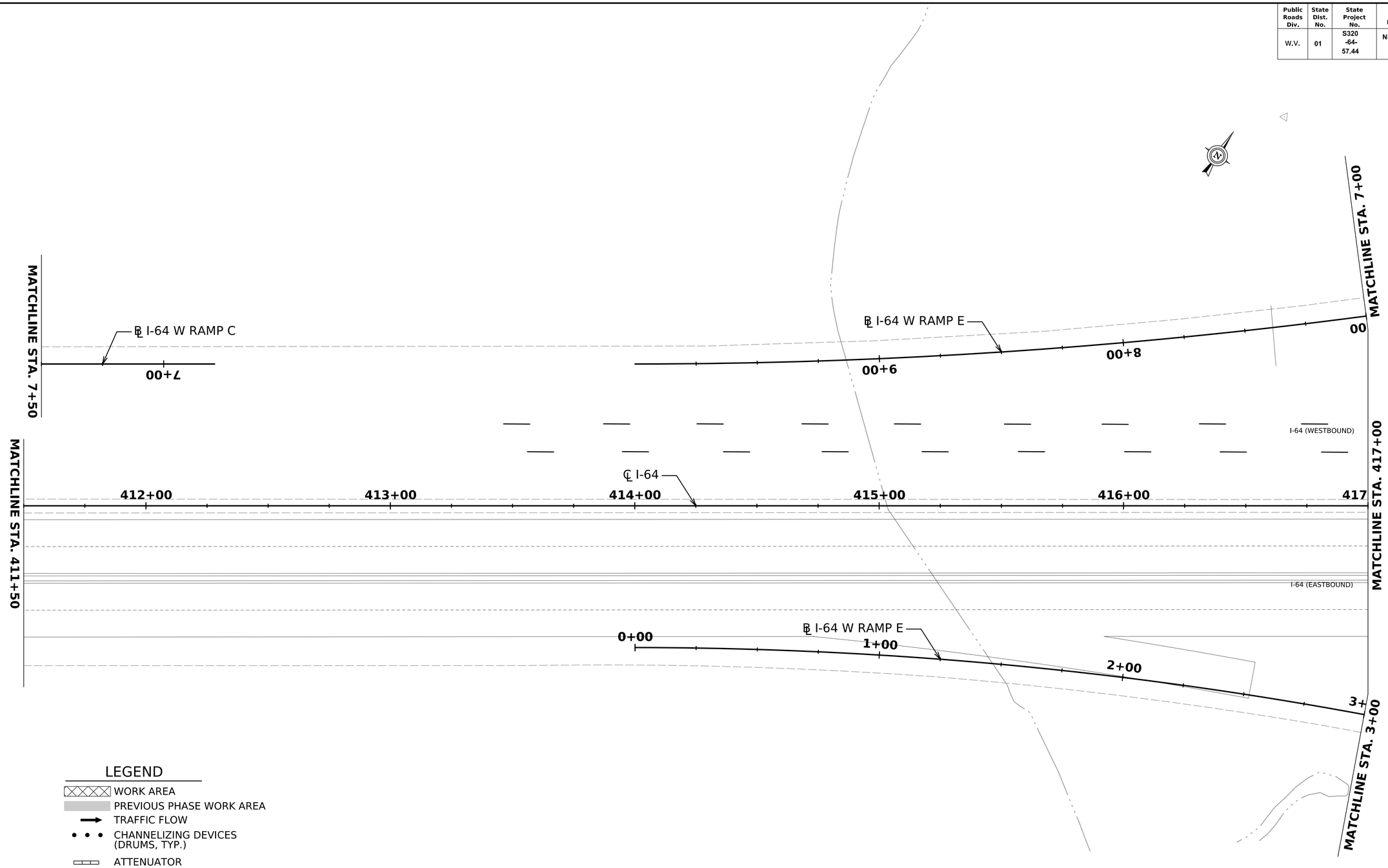

LEGEND

- WORK AREA
- PREVIOUS PHASE WORK AREA
- TRAFFIC FLOW
- CHANNELIZING DEVICES (DRUMS, TYP.)
- ATTENUATOR
- TEMPORARY BARRIER
- TYPE B FLASHING LIGHT
- SIGN LOCATION
- FLAG ORANGE, 18'x18" MIN.
- TTC SIGN
- TYPE III BARRICADE
- T.P.M.P. TEMP. PAVEMENT MARKING PAINT

SCALE:

0 20 ft

TTCP-##

Mead & Hunt

REVISION NUMBER	SHEET NUMBER	REVISION	DATE	BY

THE WEST VIRGINIA DEPARTMENT OF TRANSPORTATION
DIVISION OF HIGHWAYS

TEMPORARY TRAFFIC CONTROL PHASE 2

11-DEC-2025

J04C23C03-PLAN

X:\2247000\25191.01\TECH\Roadway\Sheets\MOT\Tap_Phase 2\Ph 1 Sheets_Engine center bridge.dgn

231916

Public Roads Div.	State Dist. No.	State Project No.	Federal Project No.	County	Sheet No.	Total Sheets
W.V.	01	S320 -64- 57.44	NHPP-0064 (497)D	KANAWHA	XX	XX

LEGEND

- WORK AREA
- PREVIOUS PHASE WORK AREA
- TRAFFIC FLOW
- CHANNELIZING DEVICES (DRUMS, TYP.)
- ATTENUATOR
- TEMPORARY BARRIER
- TYPE B FLASHING LIGHT
- SIGN LOCATION
- FLAG ORANGE, 18'x18" MIN.
- TTC SIGN
- TYPE III BARRICADE
- T.P.M.P. TEMP. PAVEMENT MARKING PAINT

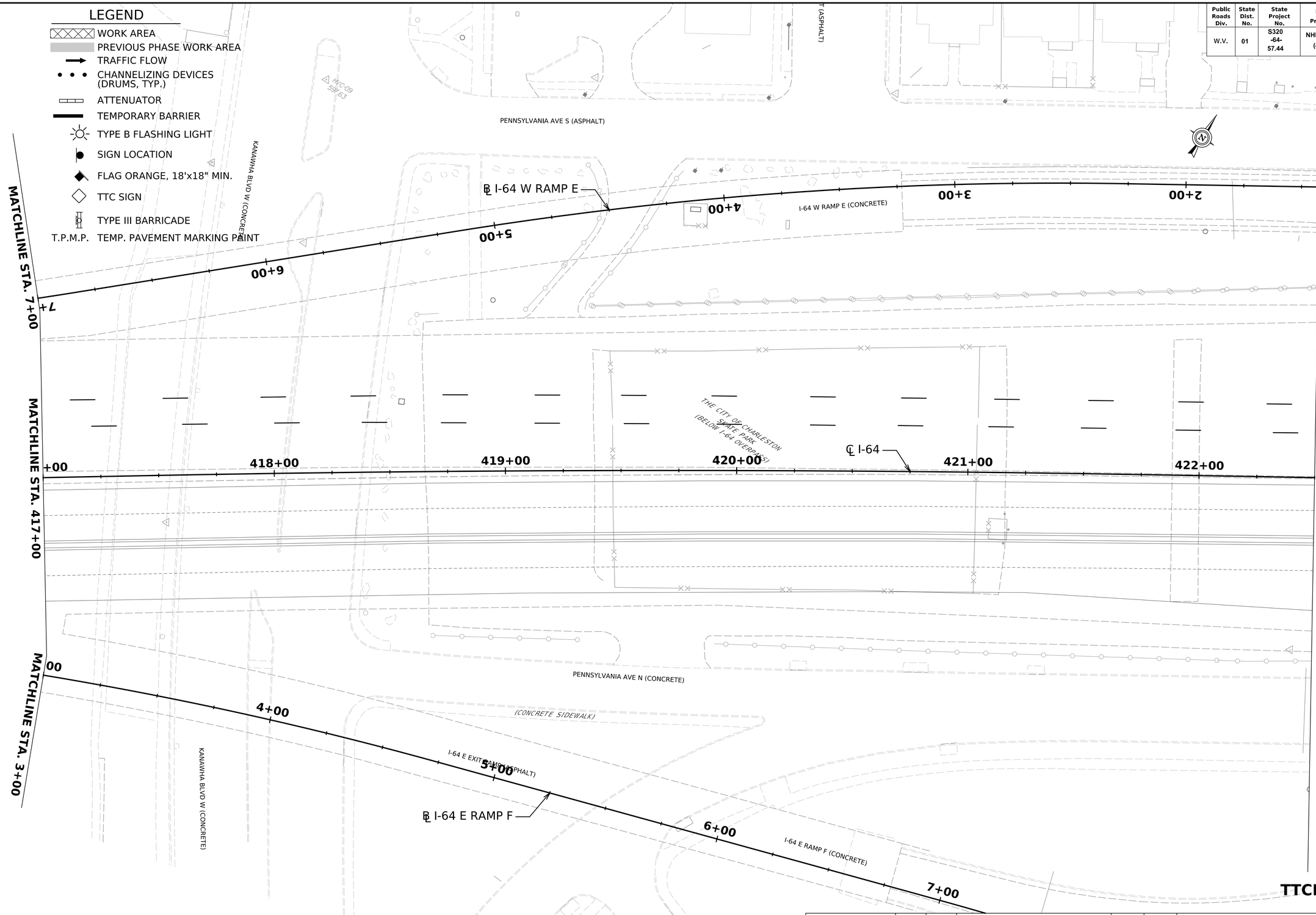

SCALE:
0 20 ft

Mead & Hunt

REVISION NUMBER	SHEET NUMBER	REVISION	DATE	BY

THE WEST VIRGINIA DEPARTMENT OF TRANSPORTATION
DIVISION OF HIGHWAYS

TEMPORARY TRAFFIC CONTROL PHASE 2

11-DEC-2025

J04C23C03-PLAN

Public Roads Div.	State Dist. No.	State Project No.	Federal Project No.	County	Sheet No.	Total Sheets
W.V.	01	S320 -64- 57.44	NHPP-0064 (497)D	KANAWHA	XX	XX

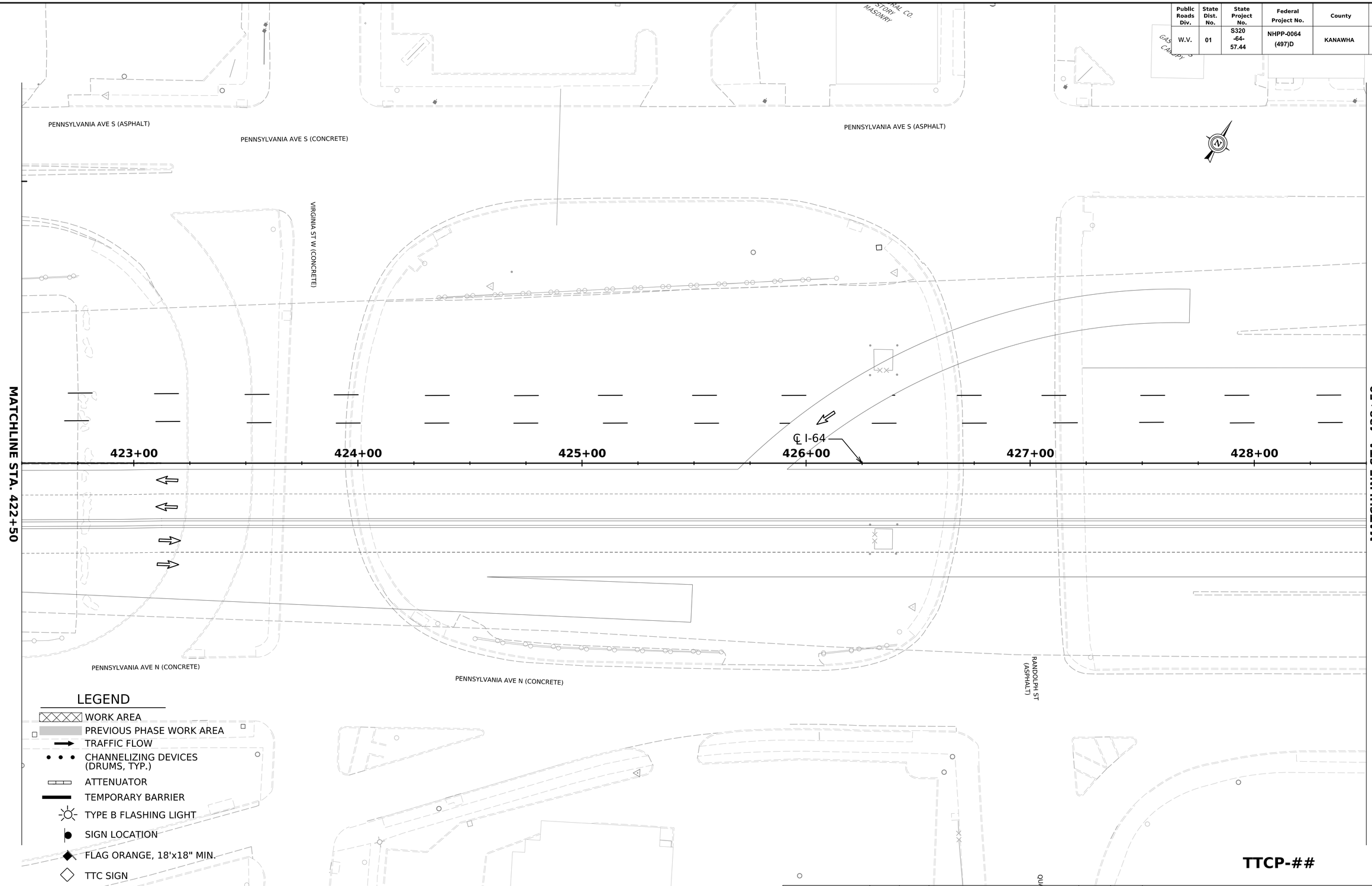

TTCP-##

Mead & Hunt

REVISION NUMBER	SHEET NUMBER	REVISION	DATE	BY

THE WEST VIRGINIA DEPARTMENT OF TRANSPORTATION
DIVISION OF HIGHWAYS

TEMPORARY TRAFFIC CONTROL PHASE 2

11-DEC-2025

J04C23C03-PLAN

Public Roads Div.	State Dist. No.	State Project No.	Federal Project No.	County	Sheet No.	Total Sheets
W.V.	01	S320 -64- 57.44	NHPP-0064 (497)D	KANAWHA	XX	XX

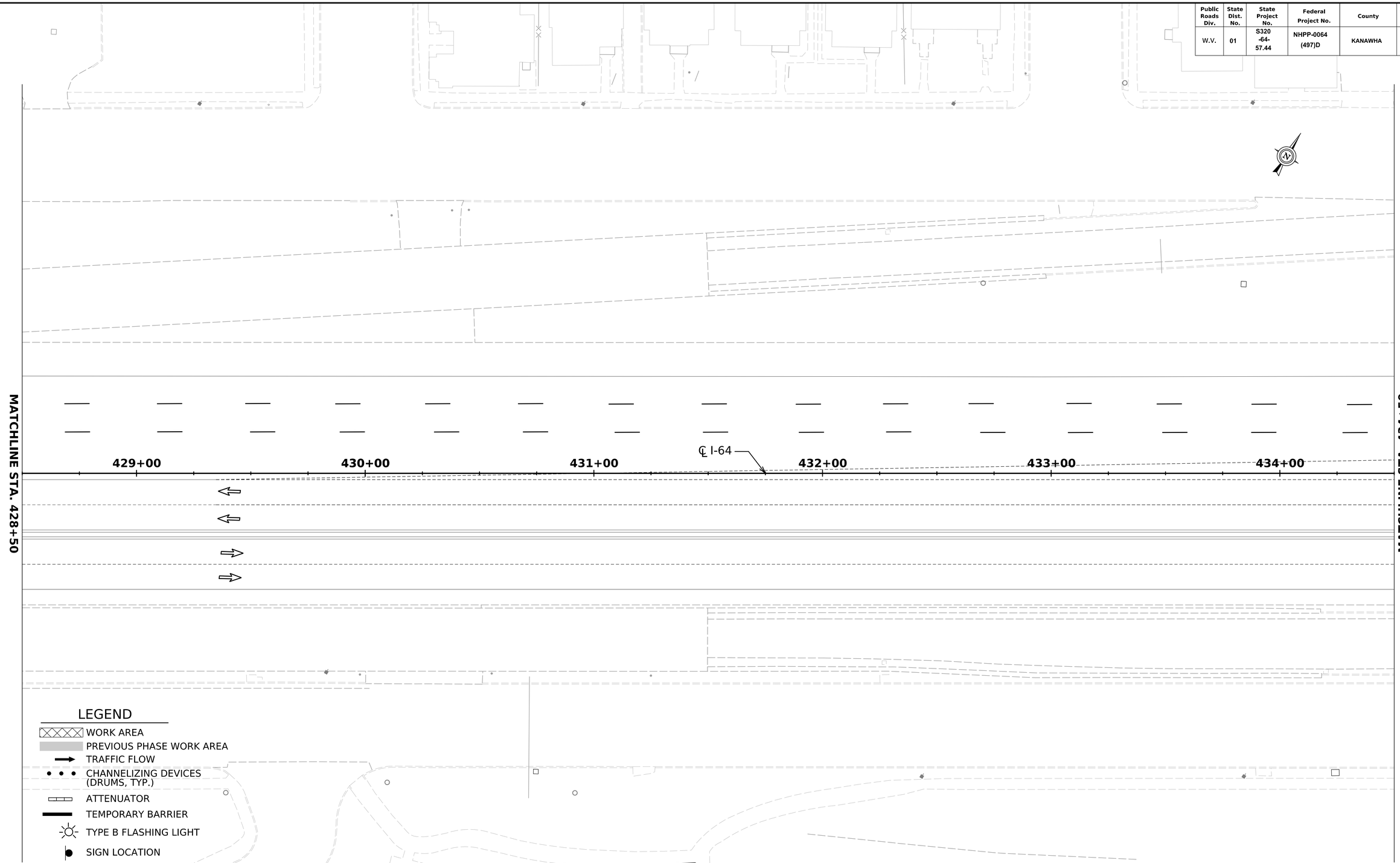

TTCP-##

Mead &Hunt

REVISION NUMBER	SHEET NUMBER	REVISION	DATE	BY

THE WEST VIRGINIA DEPARTMENT OF TRANSPORTATION
DIVISION OF HIGHWAYS

TEMPORARY TRAFFIC CONTROL PHASE 2

11-DEC-2025

J04C23C03-PLAN

Public Roads Div.	State Dist. No.	State Project No.	Federal Project No.	County	Sheet No.	Total Sheets
W.V.	01	S320 -64- 57.44	NHPP-0064 (497)D	KANAWHA	XX	XX

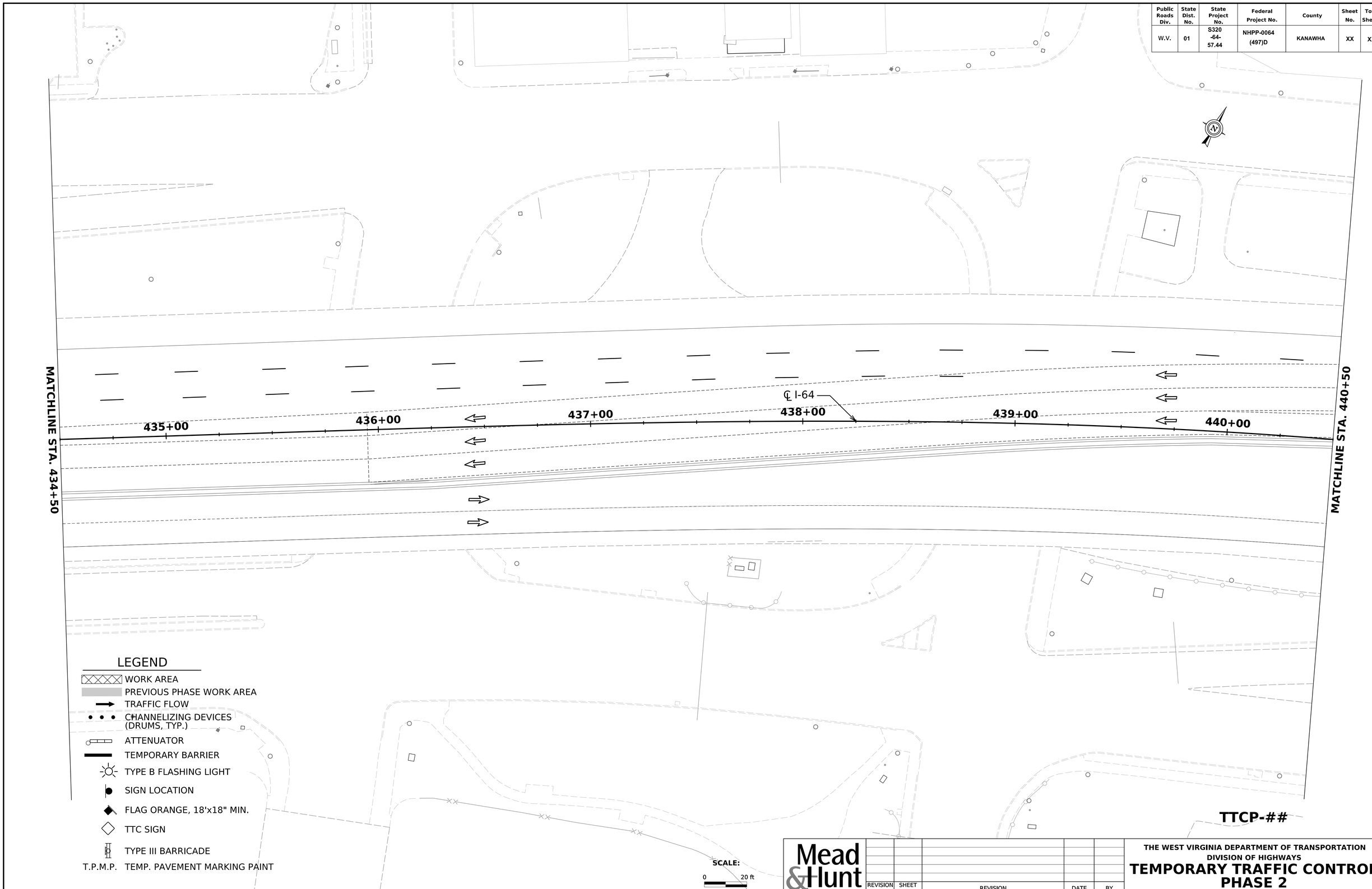

Mead & Hunt

REVISION NUMBER	SHEET NUMBER	REVISION	DATE	BY

THE WEST VIRGINIA DEPARTMENT OF TRANSPORTATION
DIVISION OF HIGHWAYS

TEMPORARY TRAFFIC CONTROL PHASE 2

11-DEC-2025

J04C23C03-PLAN

2319ps

Public Roads Div.	State Dist. No.	State Project No.	Federal Project No.	County	Sheet No.	Total Sheets
W.V.	01	S320 -64- 57.44	NHPP-0064 (497)D	KANAWHA	XX	XX

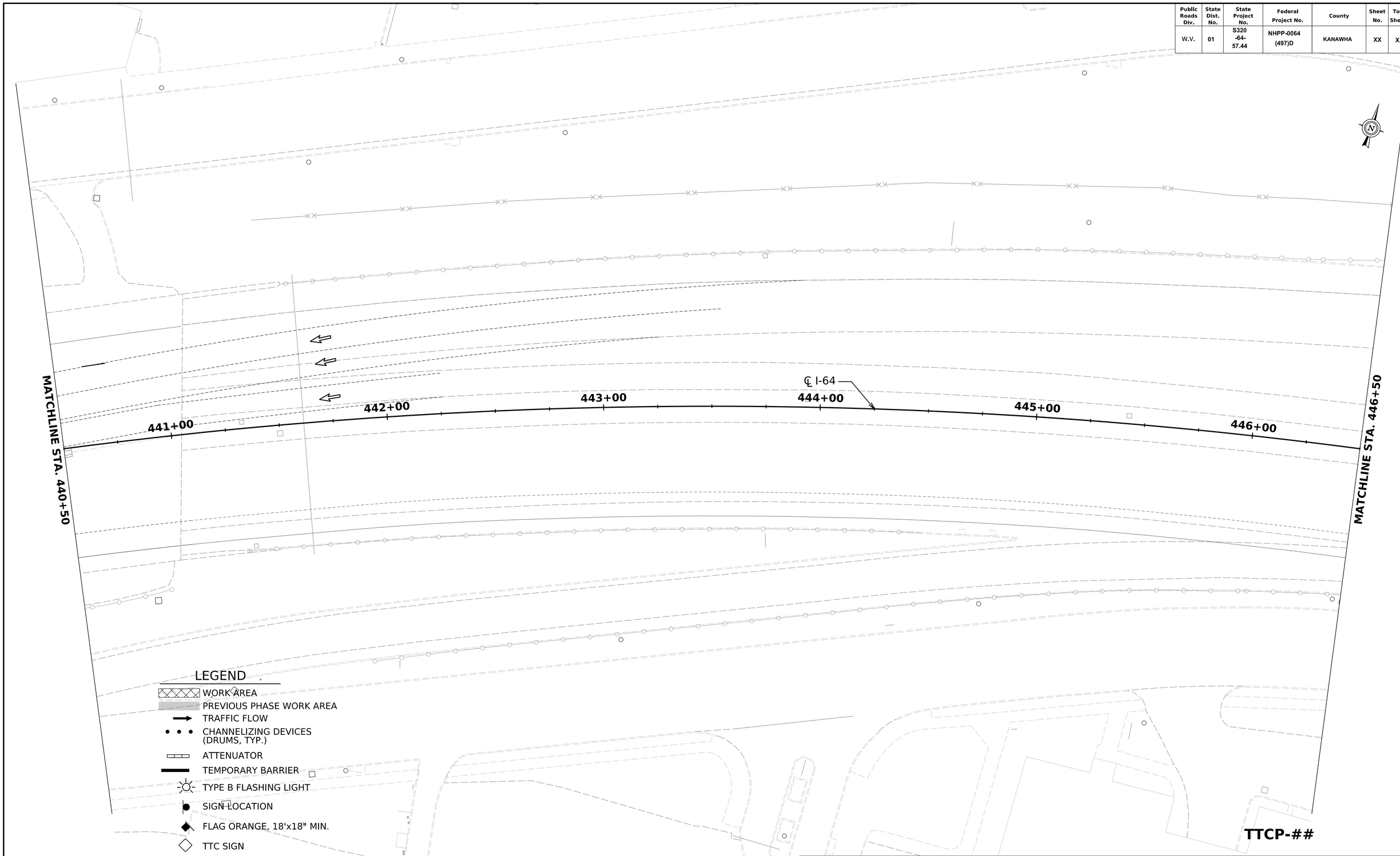

Mead & Hunt

REVISION NUMBER	SHEET NUMBER	REVISION	DATE	BY

THE WEST VIRGINIA DEPARTMENT OF TRANSPORTATION
DIVISION OF HIGHWAYS

TEMPORARY TRAFFIC CONTROL PHASE 2

11-DEC-2025

J04C23C03-PLAN

Public Roads Div.	State Dist. No.	State Project No.	Federal Project No.	County	Sheet No.	Total Sheets
W.V.	01	S320 -64- 57.44	NHPP-0064 (497)D	KANAWHA	XX	XX

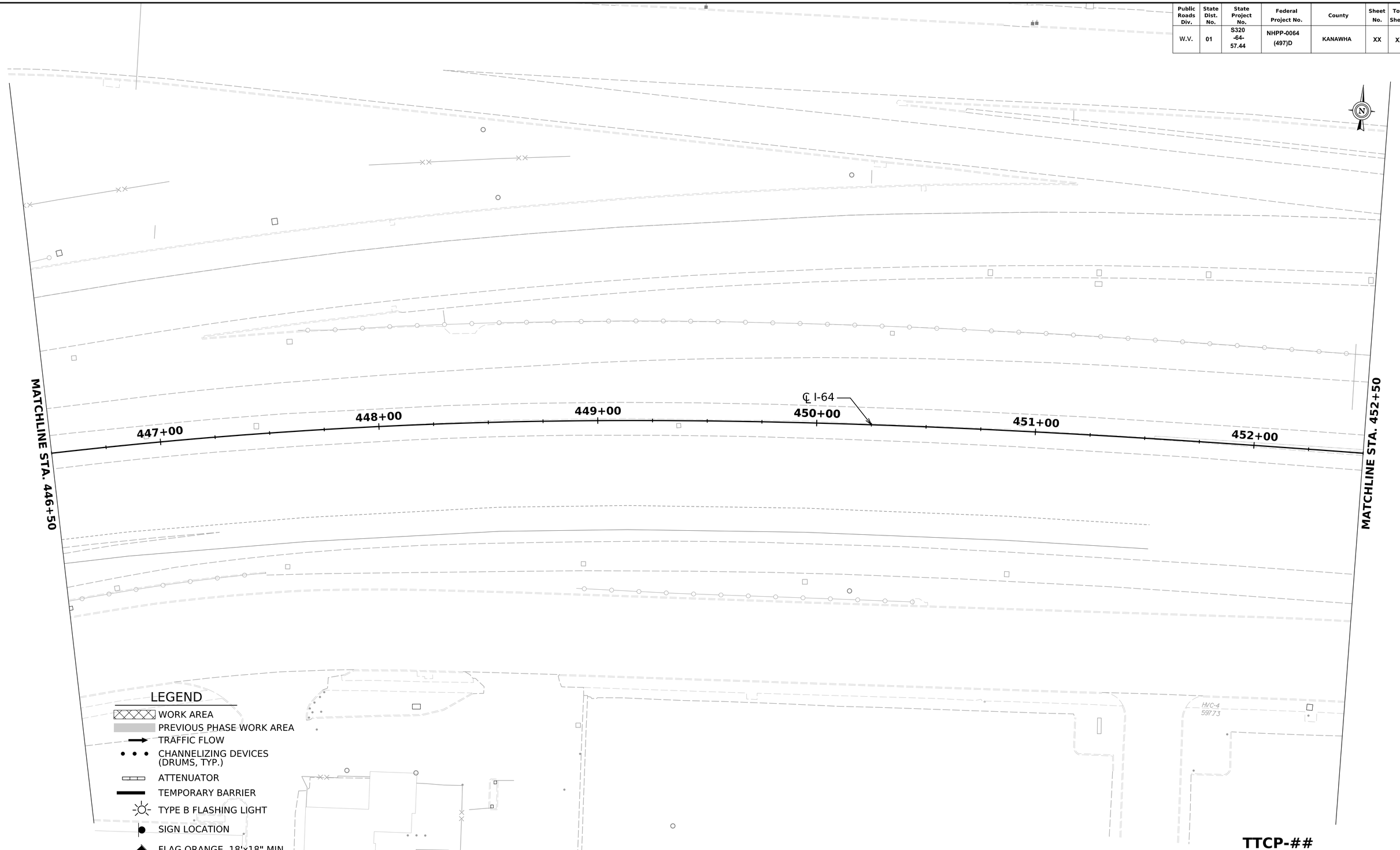

11-DEC-2025

Mead & Hunt

REVISION NUMBER	SHEET NUMBER	REVISION	DATE	BY

THE WEST VIRGINIA DEPARTMENT OF TRANSPORTATION
DIVISION OF HIGHWAYS

TEMPORARY TRAFFIC CONTROL PHASE 2

J04C23C03-PLAN

X:\2241600\2519\TUNTEC\Roadway\Sheets\MOT\Phase 2 plan sheets_engine carter bridge.dgn

2191tds

Public Roads Div.	State Dist. No.	State Project No.	Federal Project No.	County	Sheet No.	Total Sheets
W.V.	01	S320 -64- 57.44	NHPP-0064 (497)D	KANAWHA	XX	XX

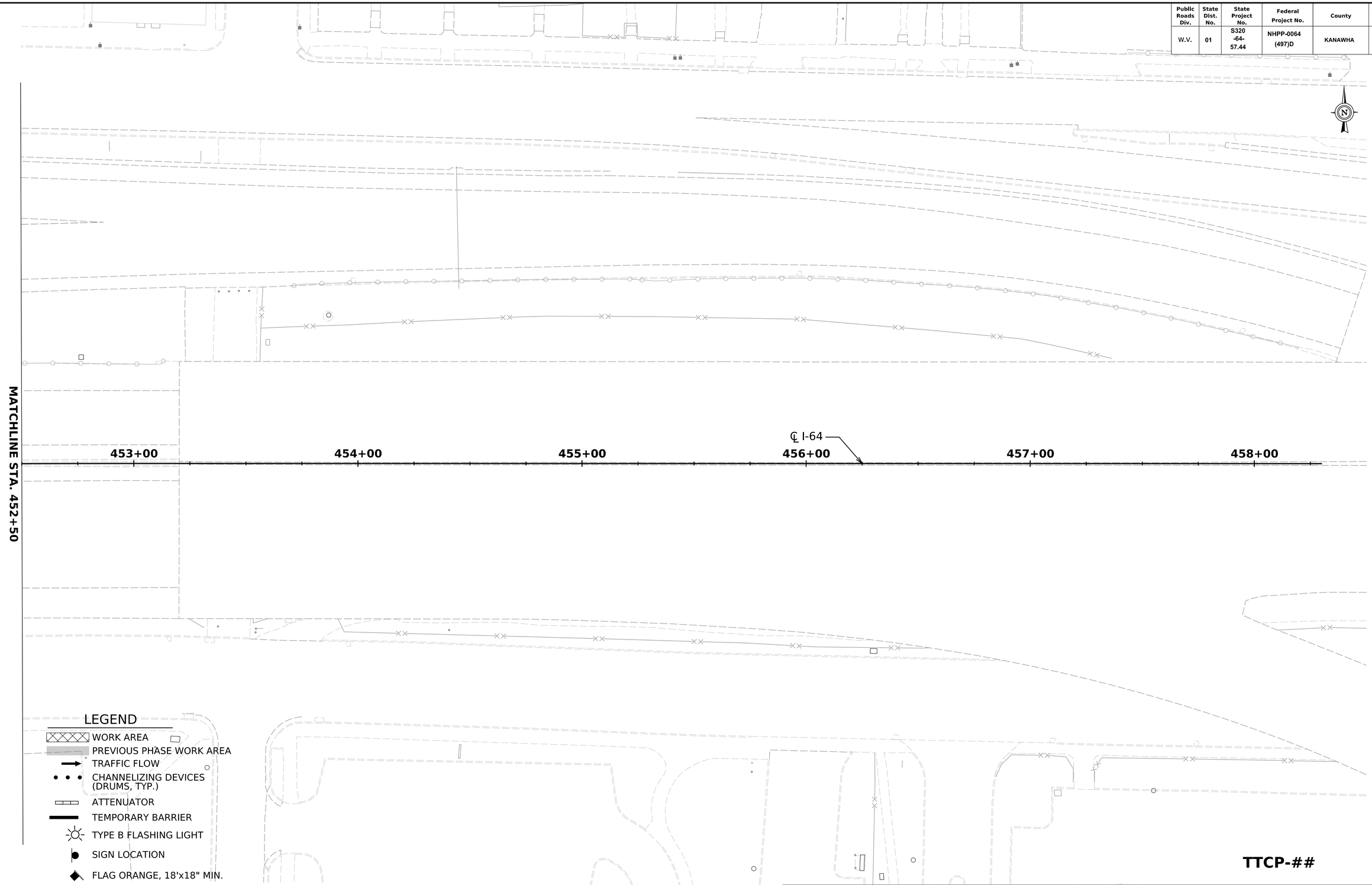

LEGEND

- WORK AREA
- PREVIOUS PHASE WORK AREA
- TRAFFIC FLOW
- CHANNELIZING DEVICES (DRUMS, TYP.)
- ATTENUATOR
- TEMPORARY BARRIER
- TYPE B FLASHING LIGHT
- SIGN LOCATION
- FLAG ORANGE, 18'x18" MIN.
- TTC SIGN
- TYPE III BARRICADE
- T.P.M.P. TEMP. PAVEMENT MARKING PAINT

SCALE:
0 20 ft

TTCP-##

Mead & Hunt

REVISION NUMBER	SHEET NUMBER	REVISION	DATE	BY

THE WEST VIRGINIA DEPARTMENT OF TRANSPORTATION
DIVISION OF HIGHWAYS

TEMPORARY TRAFFIC CONTROL PHASE 2

11-DEC-2025

J04C23C03-PLAN

Public Roads Div.	State Dist. No.	State Project No.	Federal Project No.	County	Sheet No.	Total Sheets
W.V.	01	S320 -64- 57.44	NHPP-0064 (497)D	KANAWHA	XX	XX

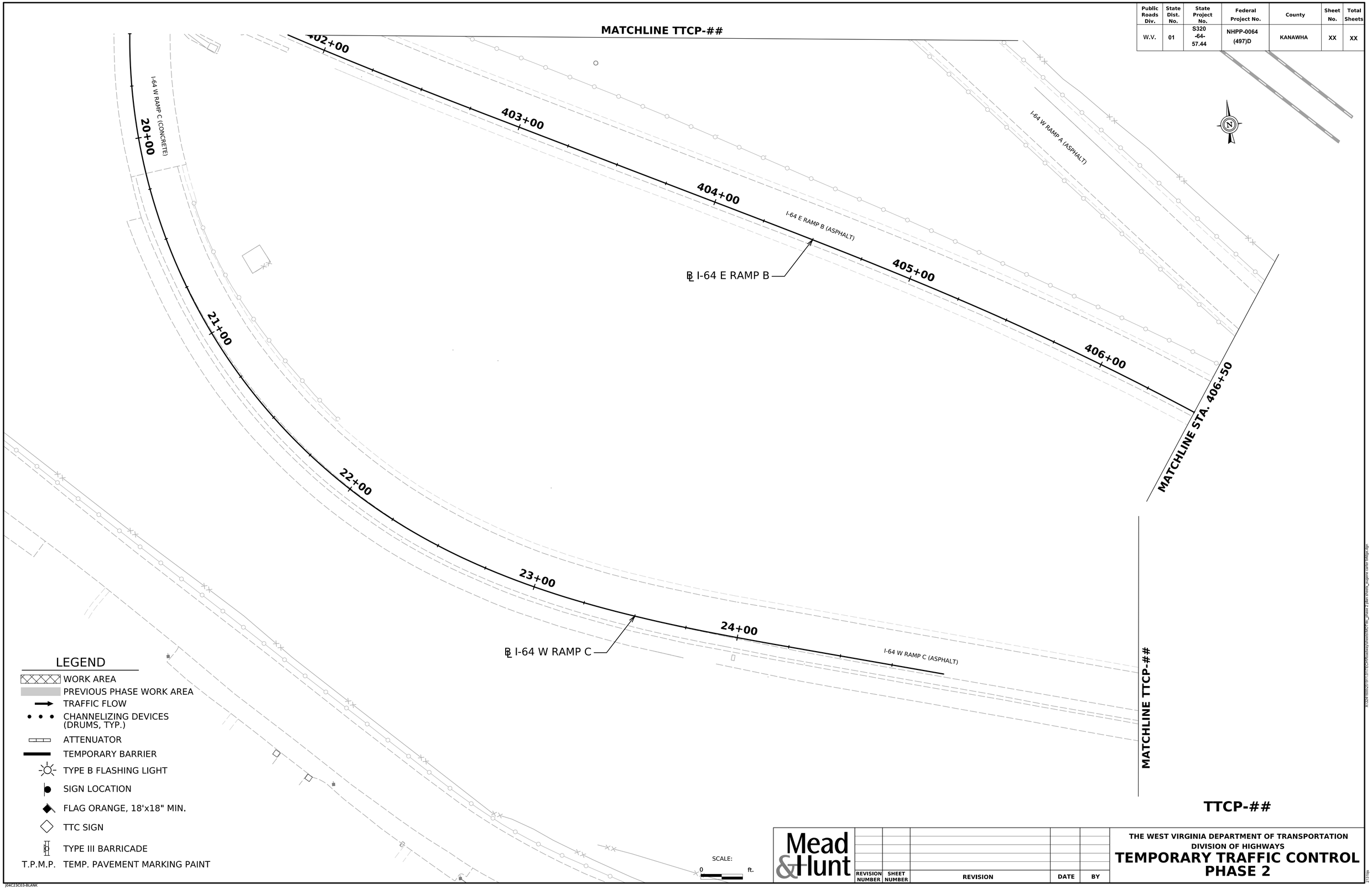

TTCP-##

11-DEC-2025

Mead & Hunt

REVISION NUMBER	SHEET NUMBER	REVISION	DATE	BY

THE WEST VIRGINIA DEPARTMENT OF TRANSPORTATION
DIVISION OF HIGHWAYS

TEMPORARY TRAFFIC CONTROL PHASE 2

J04C23C03-BLANK

Public Roads Div.	State Dist. No.	State Project No.	Federal Project No.	County	Sheet No.	Total Sheets
W.V.	01	S320 -64- 57.44	NHPP-0064 (497)D	KANAWHA	XX	XX

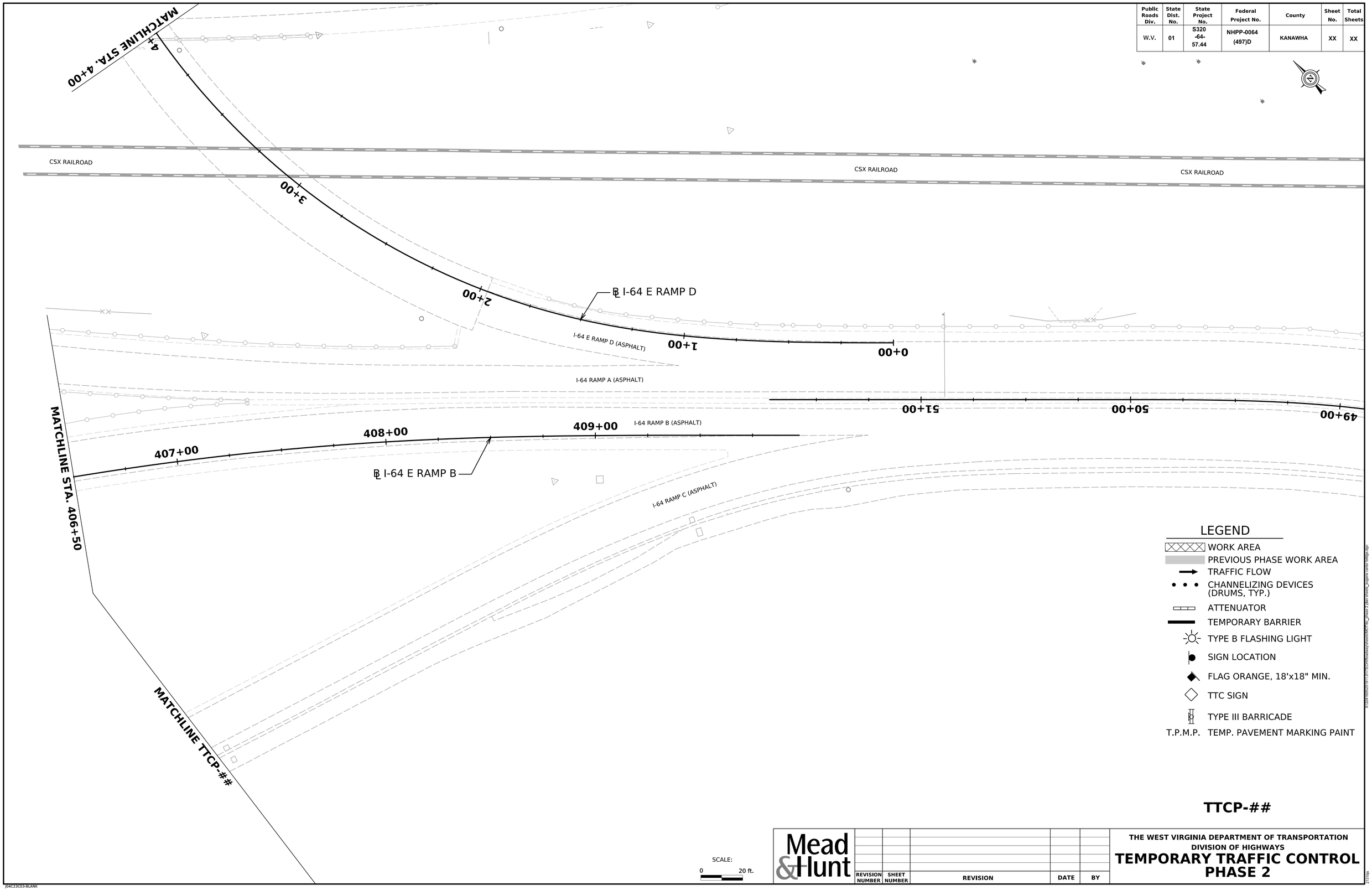

Mead & Hunt

REVISION NUMBER	SHEET NUMBER	REVISION	DATE	BY

THE WEST VIRGINIA DEPARTMENT OF TRANSPORTATION
DIVISION OF HIGHWAYS

TEMPORARY TRAFFIC CONTROL PHASE 2

11-DEC-2025

J04C23C03-BLANK

X:\S240\0000\5197\JT\TECH\Roadway\Sheets\MOT\TC_Phase 2 plan sheets_engine carter bridge.dgn

213196

Public Roads Div.	State Dist. No.	State Project No.	Federal Project No.	County	Sheet No.	Total Sheets
W.V.	1	S320 -64- 57.44 00	NHPP-0064 (497)D	KANAWHA	60	108

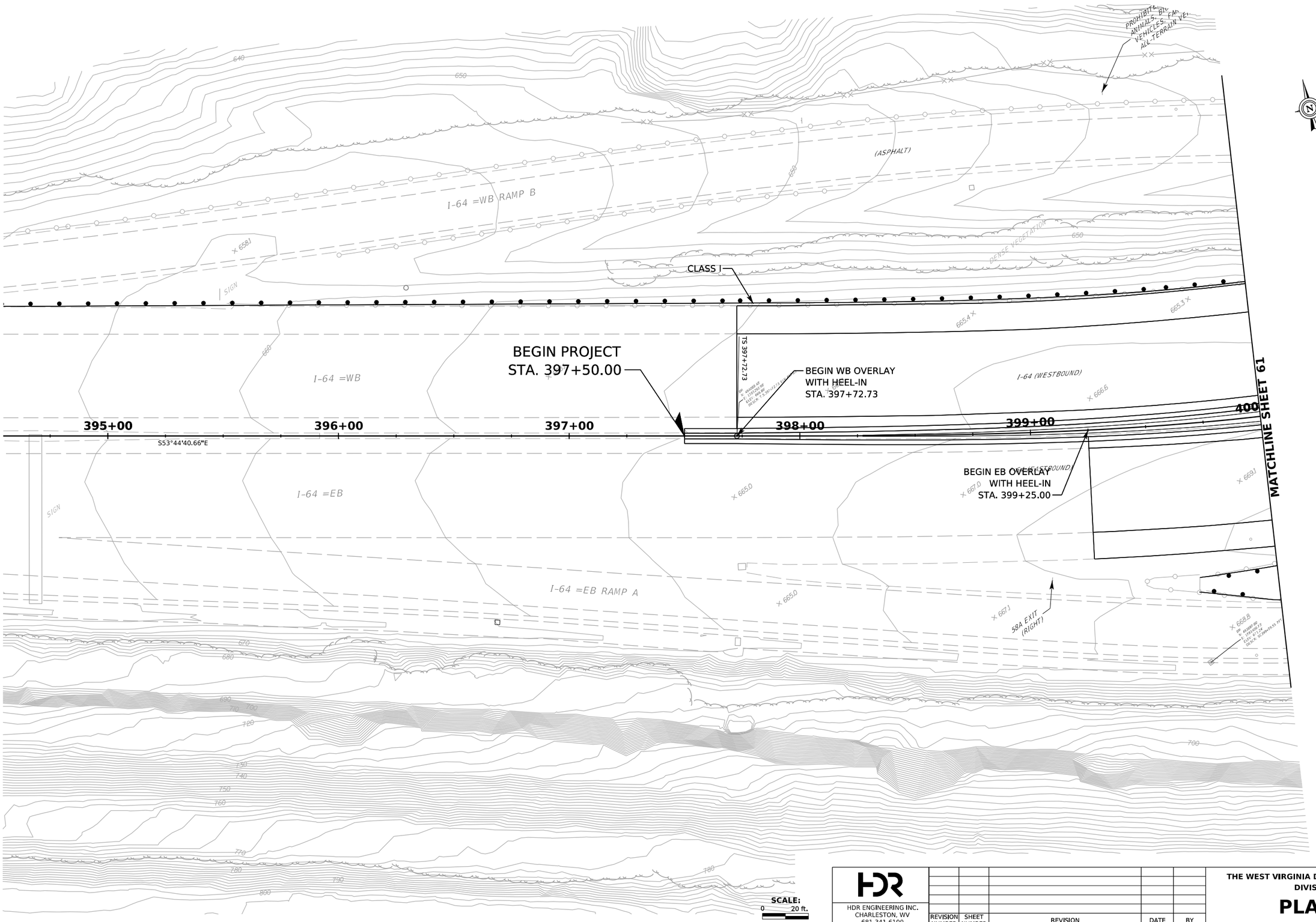

I-64 CURVE 1

*PI	=404+63.47
*N	=493679.9925
*E	=1781849.9788
PI	=404+10.87
N	=493784.6101
E	=1781851.9844
*Δ	=70°15'02.13" (LT)
Δ	=47°45'01.74" (LT)
D	=07°30'00.13"
R	=763.94'
L	=636.67'
T	=338.14'
Ls	=300.00'
Øs	=11°15'00.20"
Es	=176.13'
P	=4.90
K	=149.81
Xs	=298.85
Ys	=19.58
LT	=200.41'
ST	=100.37'
LC	=299.49'
SE	=8.0%
TS	=397+72.73
SC	=400+72.73
CS	=407+09.40
ST	=410+09.40

HDR ENGINEERING INC.
CHARLESTON, WV
681-341-6100

REVISION NUMBER	SHEET NUMBER	REVISION	DATE	BY

THE WEST VIRGINIA DEPARTMENT OF TRANSPORTATION
DIVISION OF HIGHWAYS

PLAN SHEET

J04C23C03-PLAN

Public Roads Div.	State Dist. No.	State Project No.	Federal Project No.	County	Sheet No.	Total Sheets
W.V.	1	S320 -64- 57.44 00	NHPP-0064 (497)D	KANAWHA	61	108

I-64 CURVE 1

*PI	=404+63.47
*N	=493679.9925
*E	=1781849.9788
PI	=404+10.87
N	=493784.6101
E	=1781851.9844
*Δ	=70°15'02.13" (LT)
Δ	=47°45'01.74" (LT)
D	=07°30'00.13"
R	=763.94'
L	=636.67'
T	=338.14'
Ls	=300.00'
Øs	=11°15'00.20"
Es	=176.13'
P	=4.90
K	=149.81
Xs	=298.85
Ys	=19.58
LT	=200.41'
ST	=100.37'
LC	=299.49'
SE	=8.0%
TS	=397+72.73
SC	=400+72.73
CS	=407+09.40
ST	=410+09.40

RAMP C CURVE 1

*PI	=11+66.38
*N	=493964.1591
*E	=1782167.4660
PI	=11+57.14
N	=493995.7694
E	=1782161.2156
*Δ	=45°38'24.00" (RT)
Δ	=11°38'22.55" (RT)
D	=17°00'00.73"
R	=337.03'
L	=68.47'
T	=243.59'
Ls	=200.00'
Øs	=17°00'00.73"
Es	=33.97'
P	=4.93
K	=99.71
Xs	=198.25
Ys	=19.66
LT	=133.95'
ST	=67.23'
LC	=199.22'
SE	=7.5%
TS	=9+22.79
SC	=11+22.79
CS	=11+91.26
ST	=13+91.26

RAMP C CURVE 2

*PI	=88+13.82
*N	=495510.2406
*E	=1774658.8337
PI	=22+34.11
N	=493926.8663
E	=1781096.4759
*Δ	=175°38'02.82" (LT)
Δ	=133°38'04.46" (LT)
D	=20°59'59.18"
R	=272.84'
L	=636.36'
T	=7416.82'
Ls	=200.00'
Øs	=20°59'59.18"
Es	=7049.74'
P	=6.08
K	=99.55
Xs	=197.33
Ys	=24.20
LT	=134.28'
ST	=67.53'
LC	=198.81'
SE	=6.0%
TS	=13+97.00
SC	=15+97.00
CS	=22+33.36
ST	=24+33.36

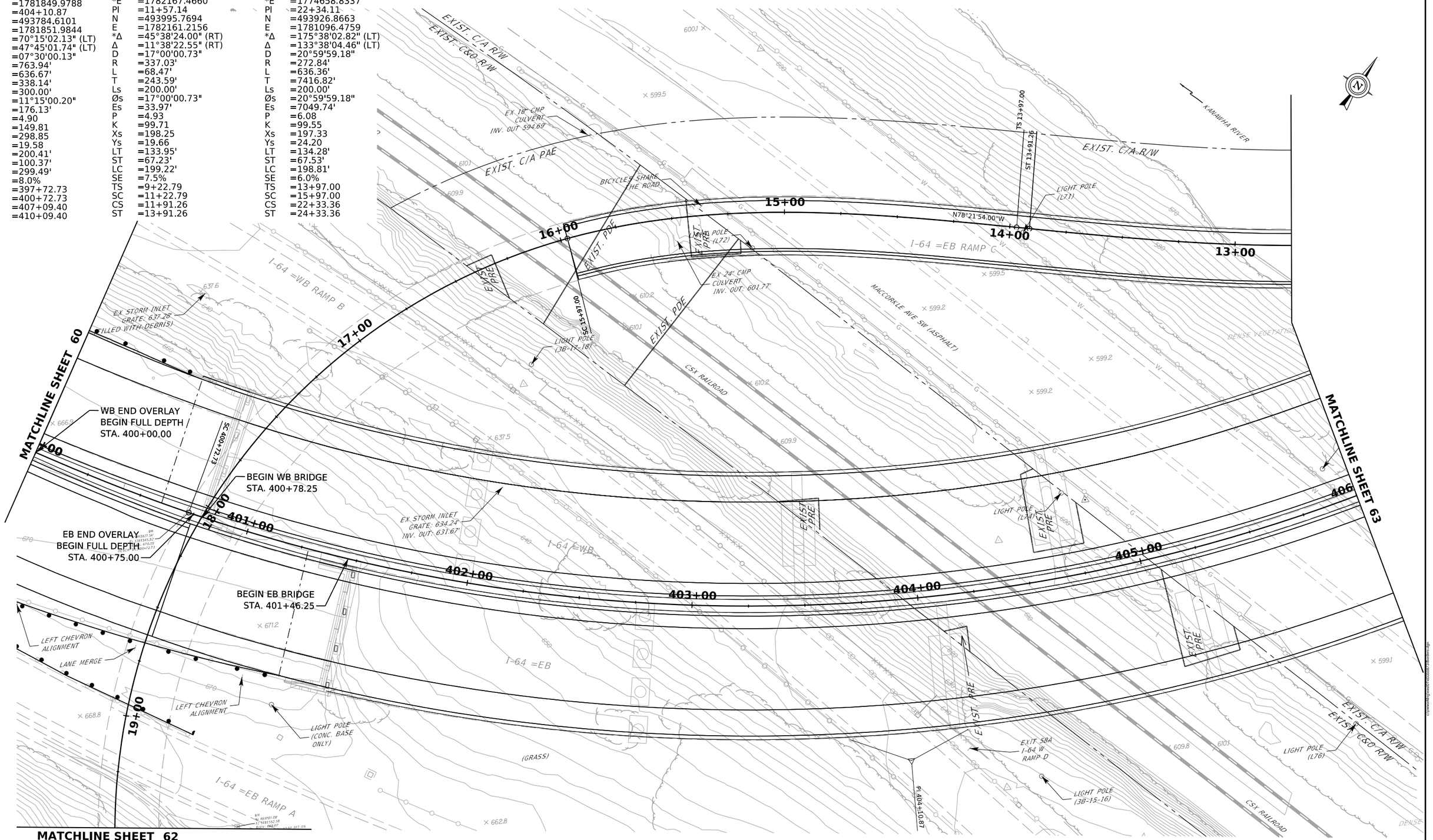

SCALE:
0 20 ft.

HDR ENGINEERING INC.
CHARLESTON, WV
681-341-6100

REVISION NUMBER	SHEET NUMBER	REVISION	DATE	BY

THE WEST VIRGINIA DEPARTMENT OF TRANSPORTATION
DIVISION OF HIGHWAYS

PLAN SHEET

J04C23C03-PLAN

Public Roads Div.	State Dist. No.	State Project No.	Federal Project No.	County	Sheet No.	Total Sheets
W.V.	1	S320 -64- 57.44 00	NHPP-0064 (497)D	KANAWHA	62	108

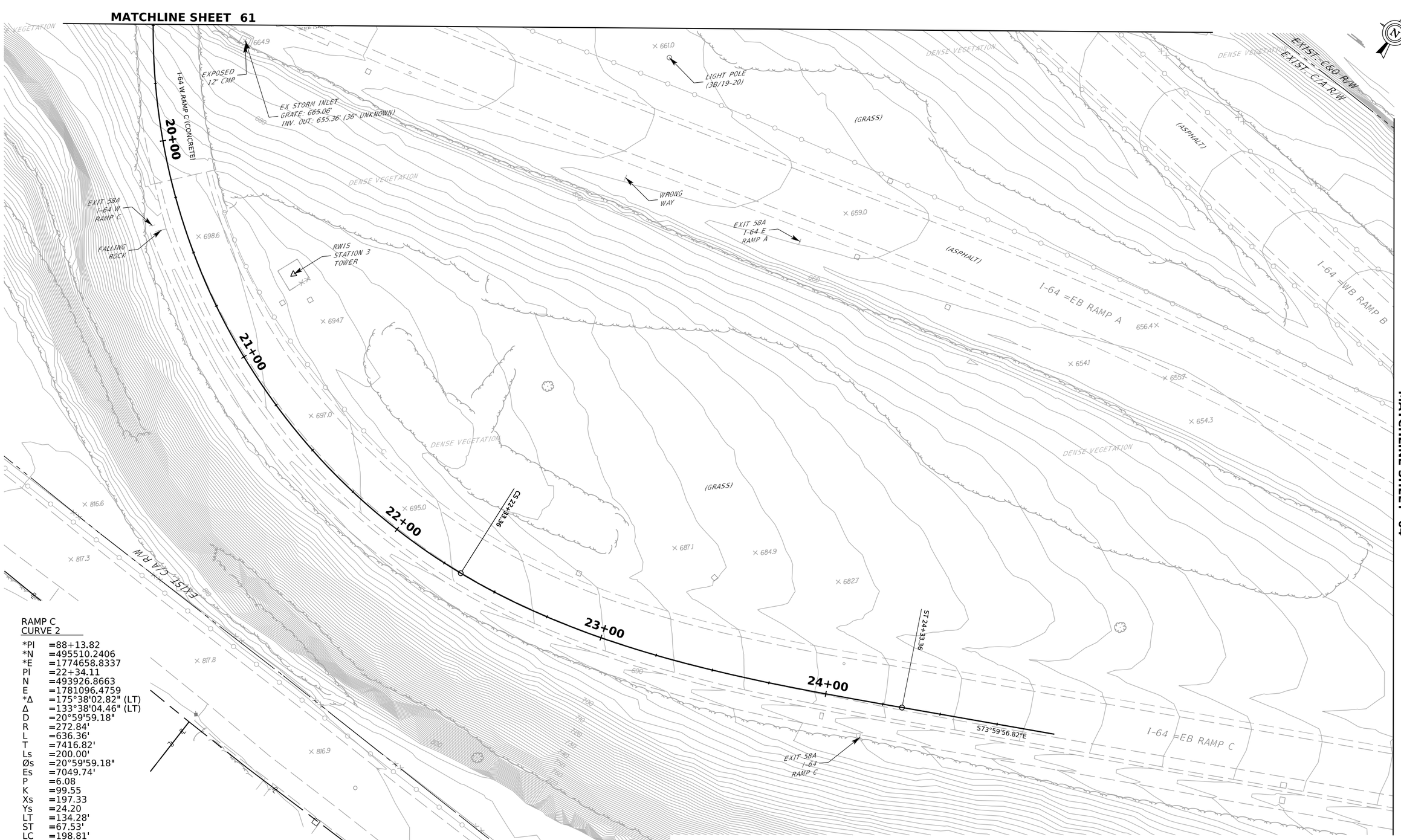

RAMP C
CURVE 2

*PI	=88+13.82
*N	=495510.2406
*E	=1774658.8337
PI	=22+34.11
N	=493926.8663
E	=1781096.4759
*Δ	=175°38'02.82" (LT)
Δ	=133°38'04.46" (LT)
D	=20°59'59.18"
R	=272.84'
L	=636.36'
T	=7416.82'
Ls	=200.00'
Øs	=20°59'59.18"
Es	=7049.74'
P	=6.08
K	=99.55
Xs	=197.33
Ys	=24.20
LT	=134.28'
ST	=67.53'
LC	=198.81'
SE	=6.0%
TS	=13+97.00
SC	=15+97.00
CS	=22+33.36
ST	=24+33.36

SCALE: 0 20 ft.

HDR ENGINEERING INC.
CHARLESTON, WV
681-341-6100

REVISION NUMBER	SHEET NUMBER	REVISION	DATE	BY

THE WEST VIRGINIA DEPARTMENT OF TRANSPORTATION
DIVISION OF HIGHWAYS

PLAN SHEET

J04C23C03-PLAN

Public Roads Div.	State Dist. No.	State Project No.	Federal Project No.	County	Sheet No.	Total Sheets
W.V.	1	S320 -64- 57.44 00	NHPP-0064 (497)D	KANAWHA	63	108

RAMP C
CURVE 1

*PI	=11+66.38
*N	=493964.1591
*E	=1782167.4660
PI	=11+57.14
N	=493995.7694
E	=1782161.2156
*Δ	=45°38'24.00" (RT)
Δ	=11°38'22.55" (RT)
D	=17°00'00.73"
R	=337.03'
L	=68.47'
T	=243.59'
Ls	=200.00'
Øs	=17°00'00.73"
Es	=33.97'
P	=4.93
K	=99.71
Xs	=198.25
Ys	=19.66
LT	=133.95'
ST	=67.23'
LC	=199.22'
SE	=7.5%
TS	=9+22.79
SC	=11+22.79
CS	=11+91.26
ST	=13+91.26

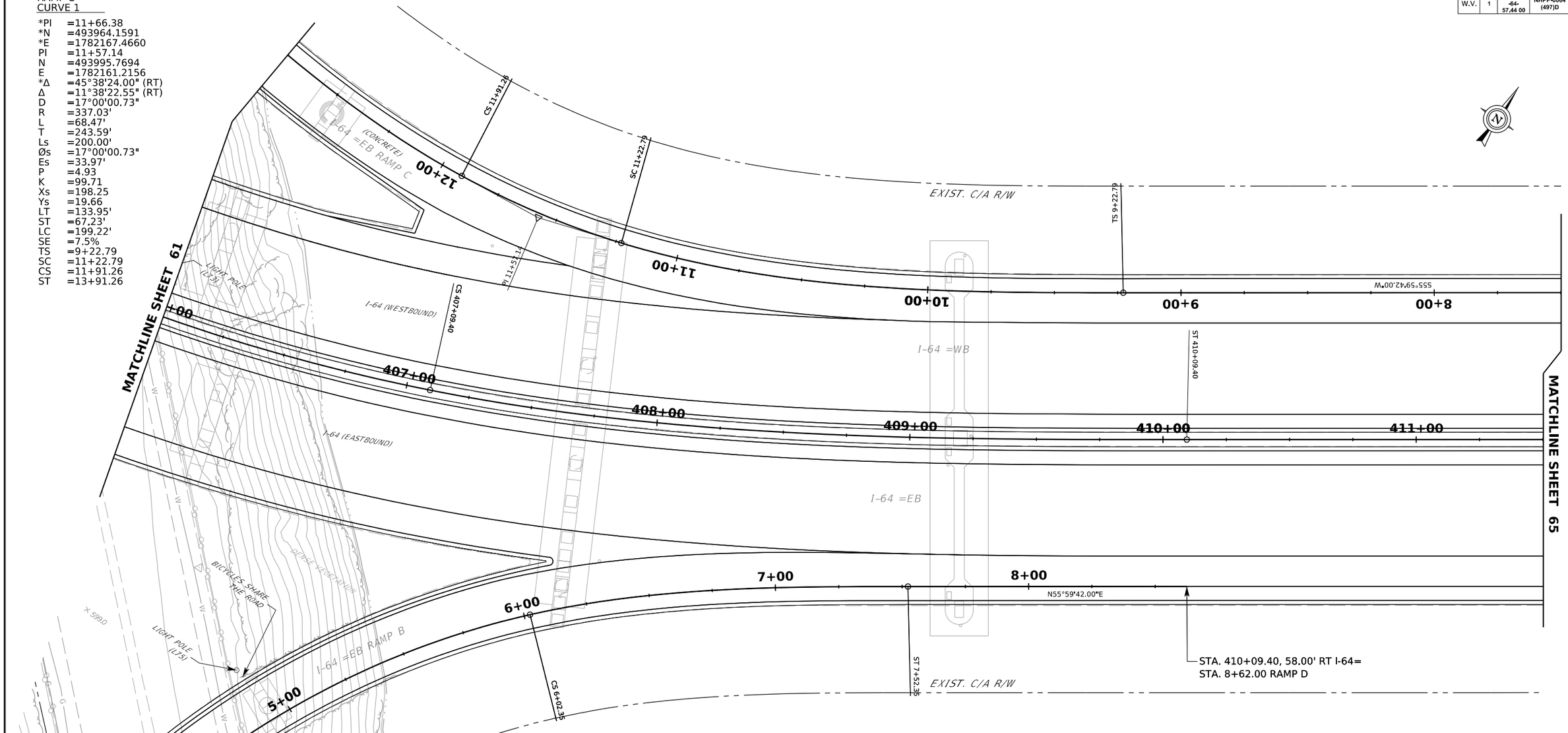

I-64 CURVE 1

*PI	=404+63.47
*N	=493679.9925
*E	=1781849.9788
PI	=404+10.87
N	=493784.6101
E	=1781851.9844
*Δ	=70°15'02.13" (LT)
Δ	=47°45'01.74" (LT)
D	=07°30'00.13"
R	=763.94'
L	=636.67'
T	=338.14'
Ls	=300.00'
Øs	=11°15'00.20"
Es	=176.13'
P	=4.90
K	=149.81
Xs	=298.85
Ys	=19.58
LT	=200.41'
ST	=100.37'
LC	=299.49'
SE	=8.0%
TS	=397+72.73
SC	=400+72.73
CS	=407+09.40
ST	=410+09.40

RAMP D
CURVE 1

*PI	=4+97.51
*N	=493678.5997
*E	=1781951.6217
PI	=4+17.60
N	=493669.2417
E	=1782063.1788
*Δ	=102°24'00.00" (RT)
Δ	=76°53'58.91" (RT)
D	=17°00'00.73"
R	=337.03'
L	=452.35'
T	=497.51'
Ls	=150.00'
Øs	=12°45'00.54"
Es	=205.27'
P	=2.78
K	=74.88
Xs	=149.67
Ys	=11.09
LT	=100.26'
ST	=50.24'
LC	=149.67'
SE	=6.0%
TS	=0+00.00
SC	=1+50.00
CS	=6+02.35
ST	=7+52.35

SCALE:
0 20 ft.

HDR ENGINEERING INC.
CHARLESTON, WV
681-341-6100

REVISION NUMBER	SHEET NUMBER	REVISION	DATE	BY

THE WEST VIRGINIA DEPARTMENT OF TRANSPORTATION
DIVISION OF HIGHWAYS

PLAN SHEET

J04C23C03-PLAN

Public Roads Div.	State Dist. No.	State Project No.	Federal Project No.	County	Sheet No.	Total Sheets
W.V.	1	S320 -64- 57.44 00	NHPP-0064 (497)D	KANAWHA	64	108

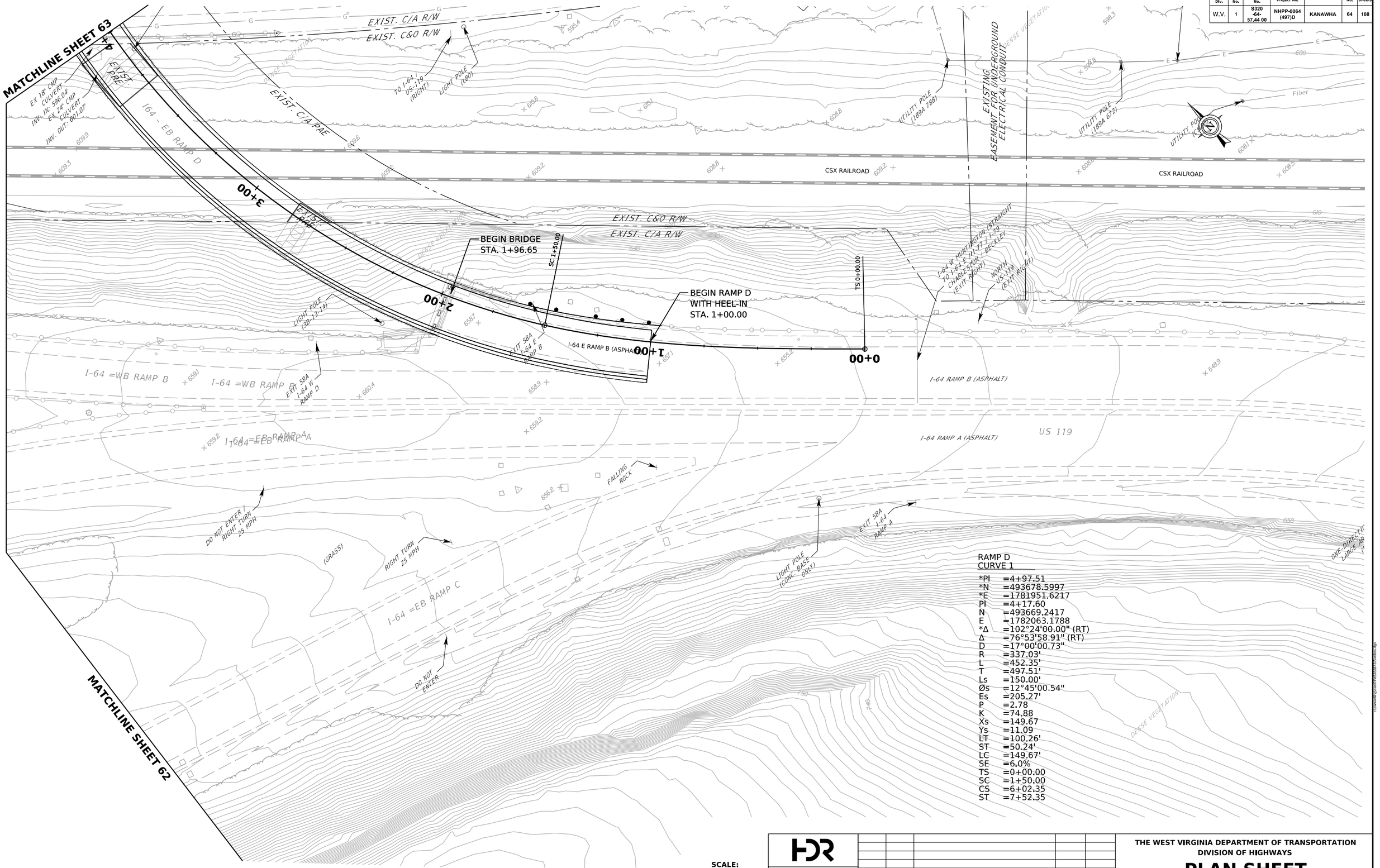

RAMP D
CURVE 1

*PI	=4+97.51
*N	=493678.5997
*E	=1781951.6217
PI	=4+17.60
N	=493669.2417
E	=1782063.1788
*Δ	=102°24'00.00" (RT)
Δ	=76°53'58.91" (RT)
D	=17°00'00.73"
R	=337.03'
L	=452.35'
T	=497.51'
Ls	=150.00'
Øs	=12°45'00.54"
Es	=205.27'
P	=2.78
K	=74.88
Xs	=149.67
Ys	=11.09
LT	=100.26'
ST	=50.24'
LC	=149.67'
SE	=6.0%
TS	=0+00.00
SC	=1+50.00
CS	=6+02.35
ST	=7+52.35

HDR ENGINEERING INC.
CHARLESTON, WV
681-341-6100

REVISION NUMBER	SHEET NUMBER	REVISION	DATE	BY

THE WEST VIRGINIA DEPARTMENT OF TRANSPORTATION
DIVISION OF HIGHWAYS

PLAN SHEET

J04C23C03-PLAN

Public Roads Div.	State Dist. No.	State Project No.	Federal Project No.	County	Sheet No.	Total Sheets
W.V.	1	S320 -64- 57.44 00	NHPP-0064 (497)D	KANAWHA	65	108

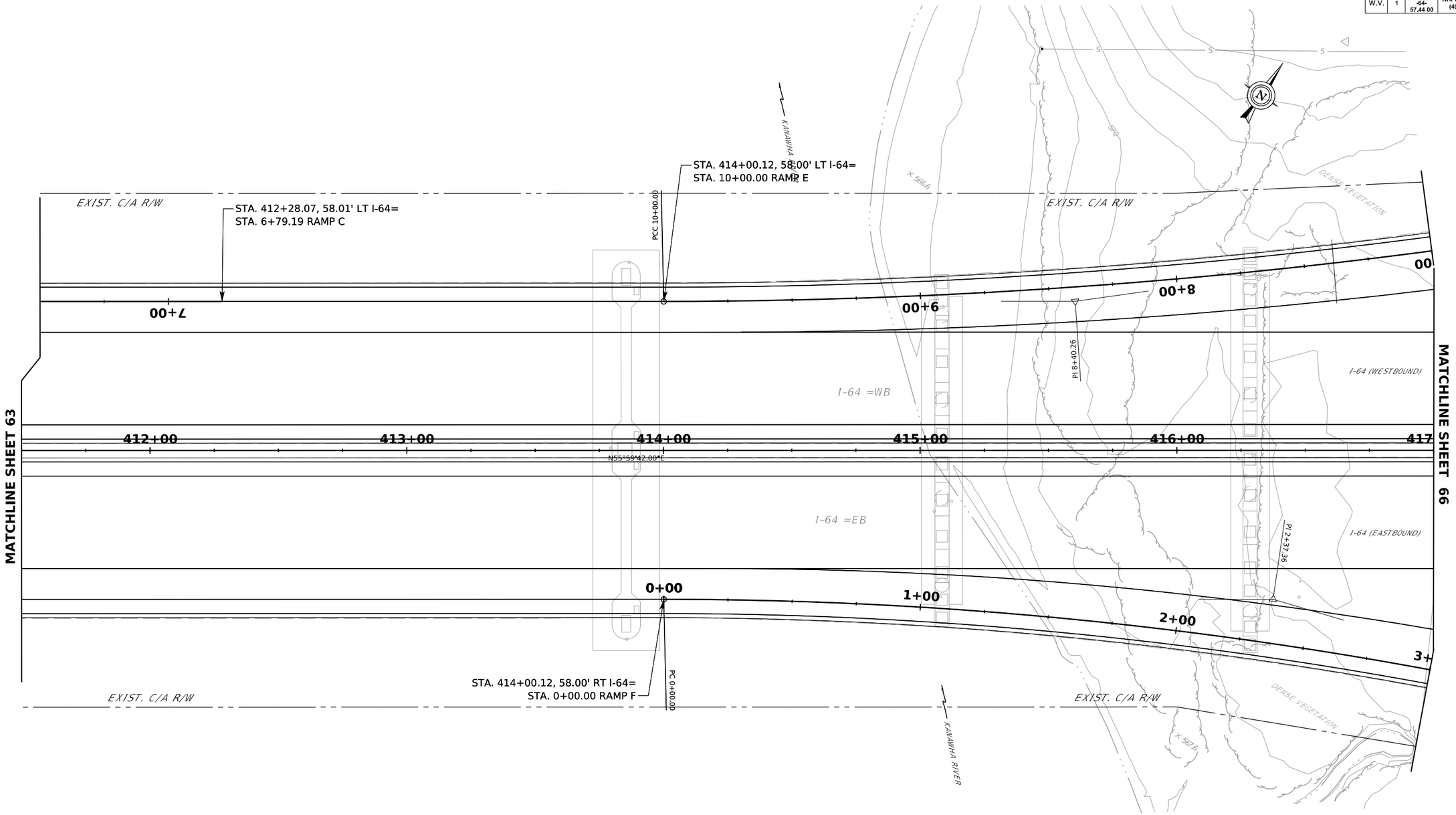

RAMP E
CURVE 2

PI = 3+71.71
Δ = 10°06'25.00"(LT)
D = 03°30'00.02"
T = 144.76'
L = 288.77'
R = 1637.02'
PC = 2+26.95
PT = 5+15.72

RAMP F
CURVE 1

PI = 2+37.36
Δ = 16°30'00.26"(RT)
D = 03°30'00.02"
T = 237.36'
L = 471.43'
R = 1637.02'
PC = 0+00.00
PT = 4+71.43

SCALE:
0 20 ft.

HDR ENGINEERING INC.
CHARLESTON, WV
681-341-6100

REVISION NUMBER	SHEET NUMBER	REVISION	DATE	BY

THE WEST VIRGINIA DEPARTMENT OF TRANSPORTATION
DIVISION OF HIGHWAYS

PLAN SHEET

J04C23C03-PLAN

Public Roads Div.	State Dist. No.	State Project No.	Federal Project No.	County	Sheet No.	Total Sheets
W.V.	1	S320 -64- 57.44 00	NHPP-0064 (497)D	KANAWHA	66	108

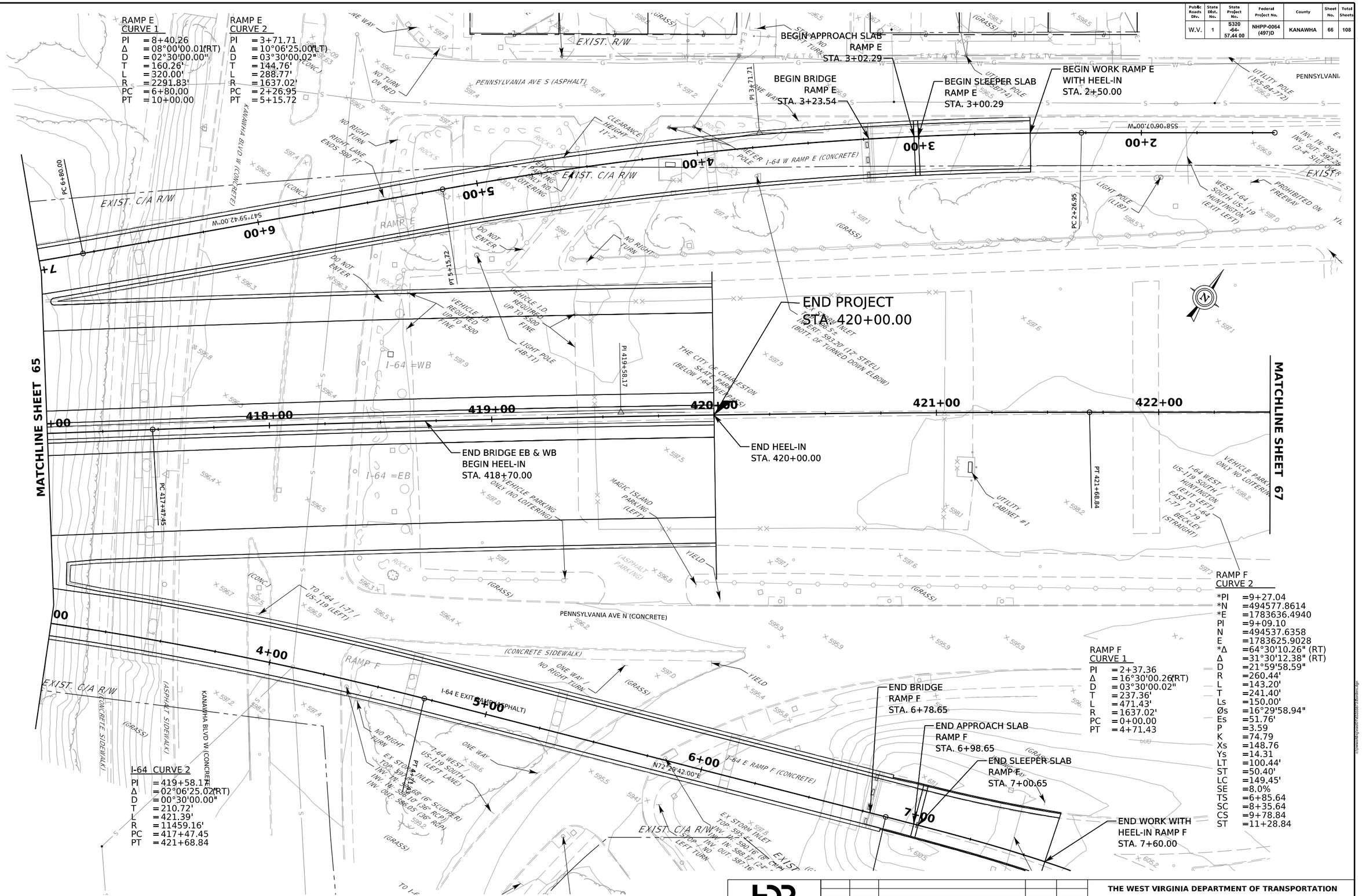

RAMP E
CURVE 1

PI	= 8+40.26
Δ	= 08°00'00.01"(RT)
D	= 02°30'00.00"
T	= 160.26'
L	= 320.00'
R	= 2291.83'
PC	= 6+80.00
PT	= 10+00.00

RAMP E
CURVE 2

PI	= 3+71.71
Δ	= 10°06'25.00"(LT)
D	= 03°30'00.02"
T	= 144.76'
L	= 288.77'
R	= 1637.02'
PC	= 2+26.95
PT	= 5+15.72

I-64 CURVE 2

PI	= 419+58.17
Δ	= 02°06'25.02"(RT)
D	= 00°30'00.00"
T	= 210.72'
L	= 421.39'
R	= 11459.16'
PC	= 417+47.45
PT	= 421+68.84

RAMP F
CURVE 1

PI	= 2+37.36
Δ	= 16°30'00.26"(RT)
D	= 03°30'00.02"
T	= 237.36'
L	= 471.43'
R	= 1637.02'
PC	= 0+00.00
PT	= 4+71.43

RAMP F
CURVE 2

*PI	=9+27.04
*N	=494577.8614
*E	=1783636.4940
PI	=9+09.10
N	=494537.6358
E	=1783625.9028
*Δ	=64°30'10.26" (RT)
Δ	=31°30'12.38" (RT)
D	=21°59'58.59"
R	=260.44'
L	=143.20'
T	=241.40'
Ls	=150.00'
Øs	=16°29'58.94"
Es	=51.76'
P	=3.59
K	=74.79
Xs	=148.76
Ys	=14.31
LT	=100.44'
ST	=50.40'
LC	=149.45'
SE	=8.0%
TS	=6+85.64
SC	=8+35.64
CS	=9+78.84
ST	=11+28.84

HDR ENGINEERING INC.
CHARLESTON, WV
681-341-6100

REVISION NUMBER	SHEET NUMBER	REVISION	DATE	BY

THE WEST VIRGINIA DEPARTMENT OF TRANSPORTATION
DIVISION OF HIGHWAYS

PLAN SHEET

J04C23C03-PLAN

Public Roads Div.	State Dist. No.	State Project No.	Federal Project No.	County	Sheet No.	Total Sheets
W.V.	1	S320 -64- 57.44 00	NHPP-0064 (497)D	KANAWHA	67	108

HDR ENGINEERING INC.
CHARLESTON, WV
681-341-6100

REVISION NUMBER	SHEET NUMBER	REVISION	DATE	BY

THE WEST VIRGINIA DEPARTMENT OF TRANSPORTATION
DIVISION OF HIGHWAYS

PLAN SHEET

J04C23C03-PLAN

Public Roads Div.	State Dist. No.	State Project No.	Federal Project No.	County	Sheet No.	Total Sheets
W.V.	1	S320 -64- 57.44 00	NHPP-0064 (497)D	KANAWHA	68	108

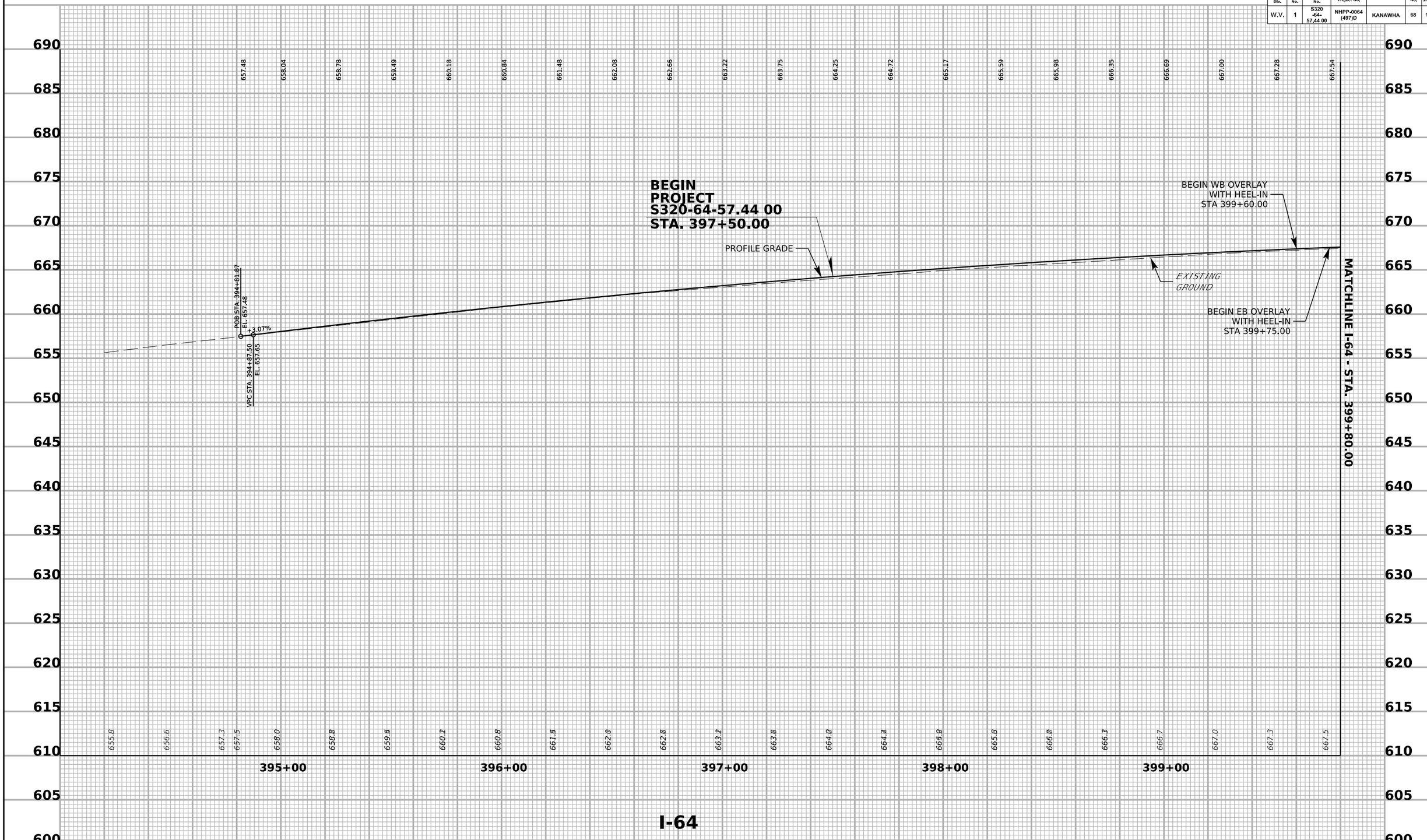

SCALES:

5 ft.
0
0
20 ft.

HDR ENGINEERING INC.
CHARLESTON, WV
681-341-6100

REVISION NUMBER	SHEET NUMBER	REVISION	DATE	BY

THE WEST VIRGINIA DEPARTMENT OF TRANSPORTATION
DIVISION OF HIGHWAYS

PROFILE SHEET

Profile Annotation Pilot V

pw:\\pwdivsuea02\Inrsw\PWCHSR_US_East_O365\Documents\WV_DOT\WVDOT-Eugene_Carter_Bridge_3-Rd_CAD_BIM\R-2_WVPHDPRX\2_Sheet_Files\01_Roadway_Consist\HE-01_Ro_J04C23C03-PLAN

12/1/2025

JCANDAL

Public Roads Div.	State Dist. No.	State Project No.	Federal Project No.	County	Sheet No.	Total Sheets
W.V.	1	S320 -64- 57.44 00	NHPP-0064 (497)D	KANAWHA	69	108

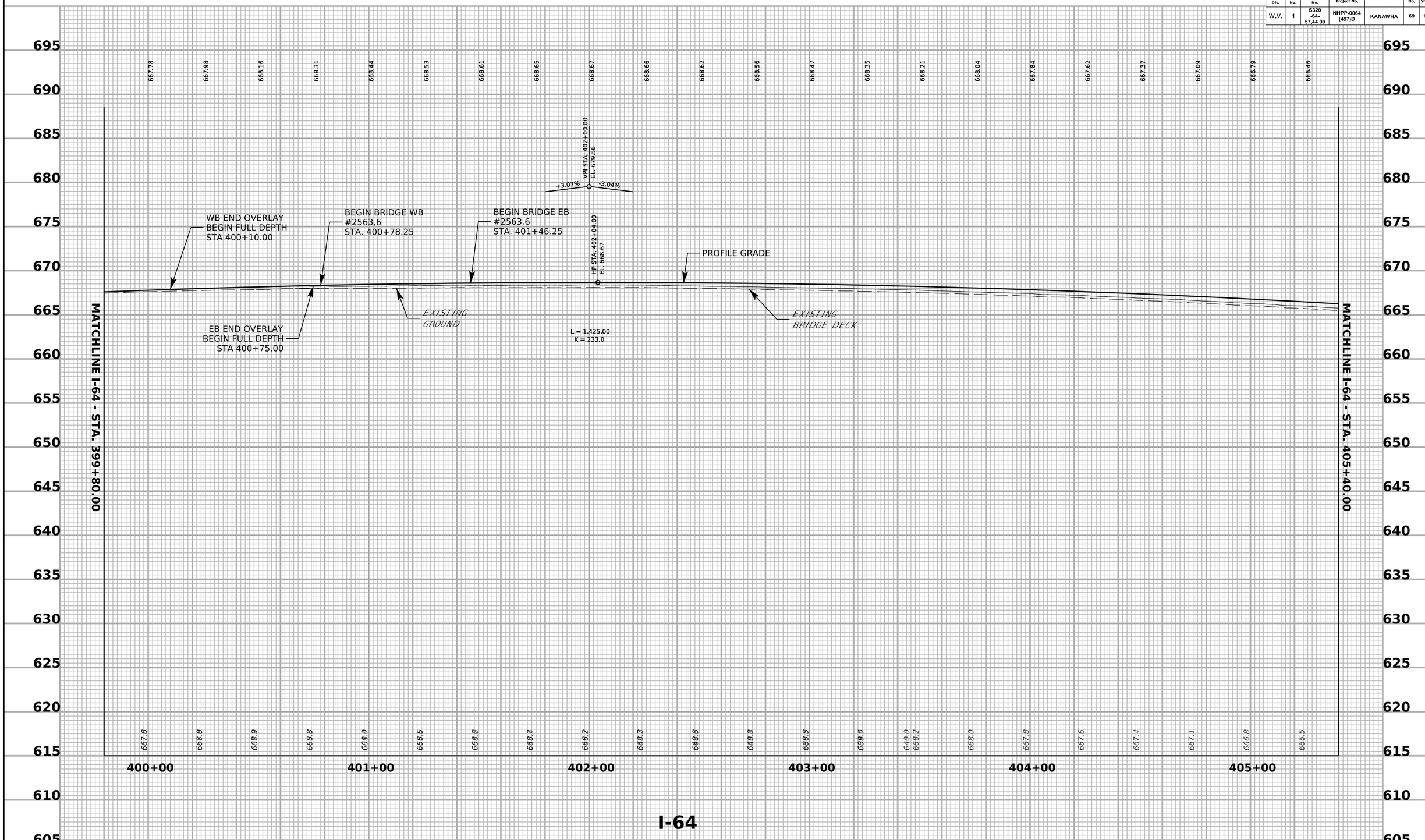

SCALES:

5 ft. 0

0 20 ft.

HDR ENGINEERING INC.
CHARLESTON, WV
681-341-6100

REVISION NUMBER	SHEET NUMBER	REVISION	DATE	BY

THE WEST VIRGINIA DEPARTMENT OF TRANSPORTATION
DIVISION OF HIGHWAYS

PROFILE SHEET

J04C23C03-PLAN

JCANDAL

12/10/2025

pw:\\pwdivsuea02\Intrnet\Pdc\HDR_US_Fed_QD\Documents\WV_DOT\WV DOT-Eugene_Carter_Bridge_JVN\2_CAD_BIM\R-2_WB\HDR\CK\2_Sheet_Files\01_Roadway_Cross\1HB.01_rdy_Pro_Engineer_Carter_J64

Public Roads Div.	State Dist. No.	State Project No.	Federal Project No.	County	Sheet No.	Total Sheets
W.V.	1	S320 -64- 57,44 00	NHPP-0064 (497)D	KANAWHA	70	108

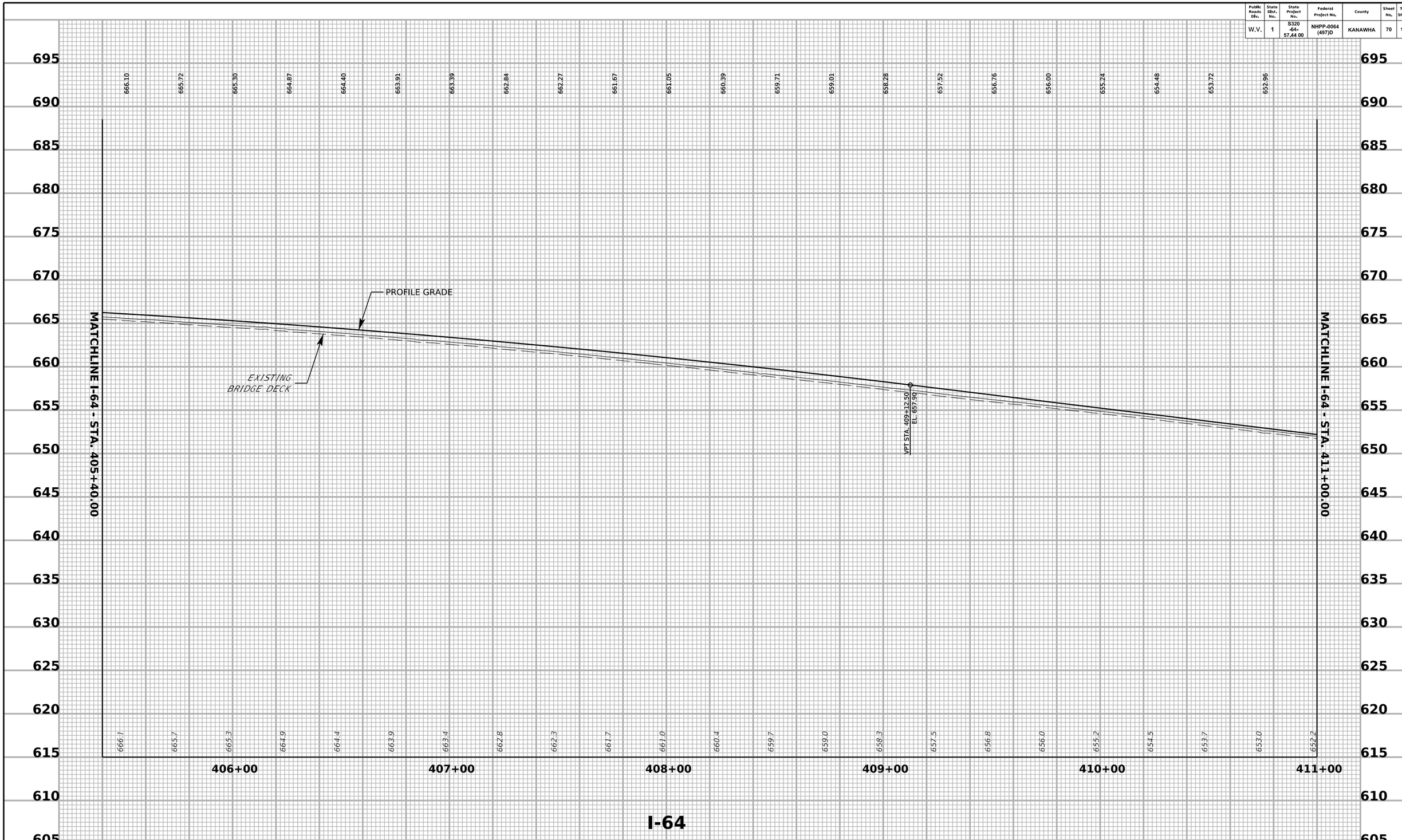

SCALES:

5 ft. 0

0 20 ft.

HDR ENGINEERING INC.
CHARLESTON, WV
681-341-6100

REVISION NUMBER	SHEET NUMBER	REVISION	DATE	BY

THE WEST VIRGINIA DEPARTMENT OF TRANSPORTATION
DIVISION OF HIGHWAYS

PROFILE SHEET

J04C23C03-PLAN

JCANDAL

12/10/2025

pw:\\pwdivsuea02\Interw\Pro\HDR_US_Fed_Gov\Documents\WV_DOT\WV DOT-Eugene_Carter_Bridge_JV\0_CAD_BIM\R-2_WithHDR\R2C2_Sheet_Files\01_Roadway_Cross\1-HB.01 - rtv_pro_Eugene_Carter_I-64

Public Roads Div.	State Dist. No.	State Project No.	Federal Project No.	County	Sheet No.	Total Sheets
W.V.	1	S320 -64- 57,44 00	NHPP-0064 (497)D	KANAWHA	71	108

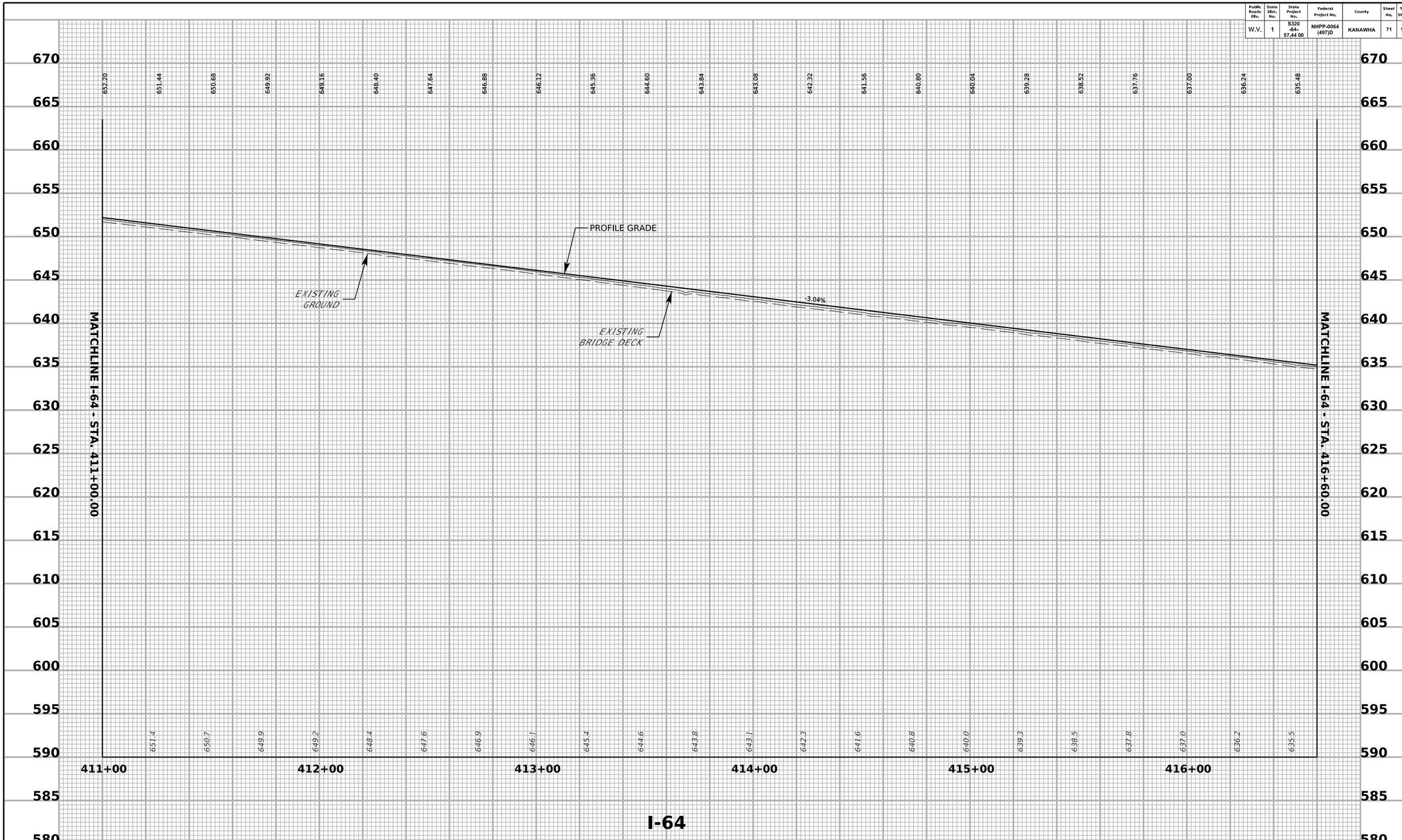

SCALES:

5 ft. 0

0 20 ft.

HDR ENGINEERING INC.
CHARLESTON, WV
681-341-6100

REVISION NUMBER	SHEET NUMBER	REVISION	DATE	BY

THE WEST VIRGINIA DEPARTMENT OF TRANSPORTATION
DIVISION OF HIGHWAYS

PROFILE SHEET

J04C23C03-PLAN

JCANDAL

12/1/2025

pw:\\pwdivsuea02\Intrnet\Pdc\HDR_US_East_O2\Documents\WV_DOT\WV DOT-Eugene_Carter_Bridge_J\NB\J_CAD_BIM\R2_WithHDREXCE_Sheet_Files\01_Roadway_Cross\1HB.01_Prof_J

Public Roads Div.	State Dist. No.	State Project No.	Federal Project No.	County	Sheet No.	Total Sheets
W.V.	1	S320 -64- 57.44 00	NHPP-0064 (497)D	KANAWHA	72	108

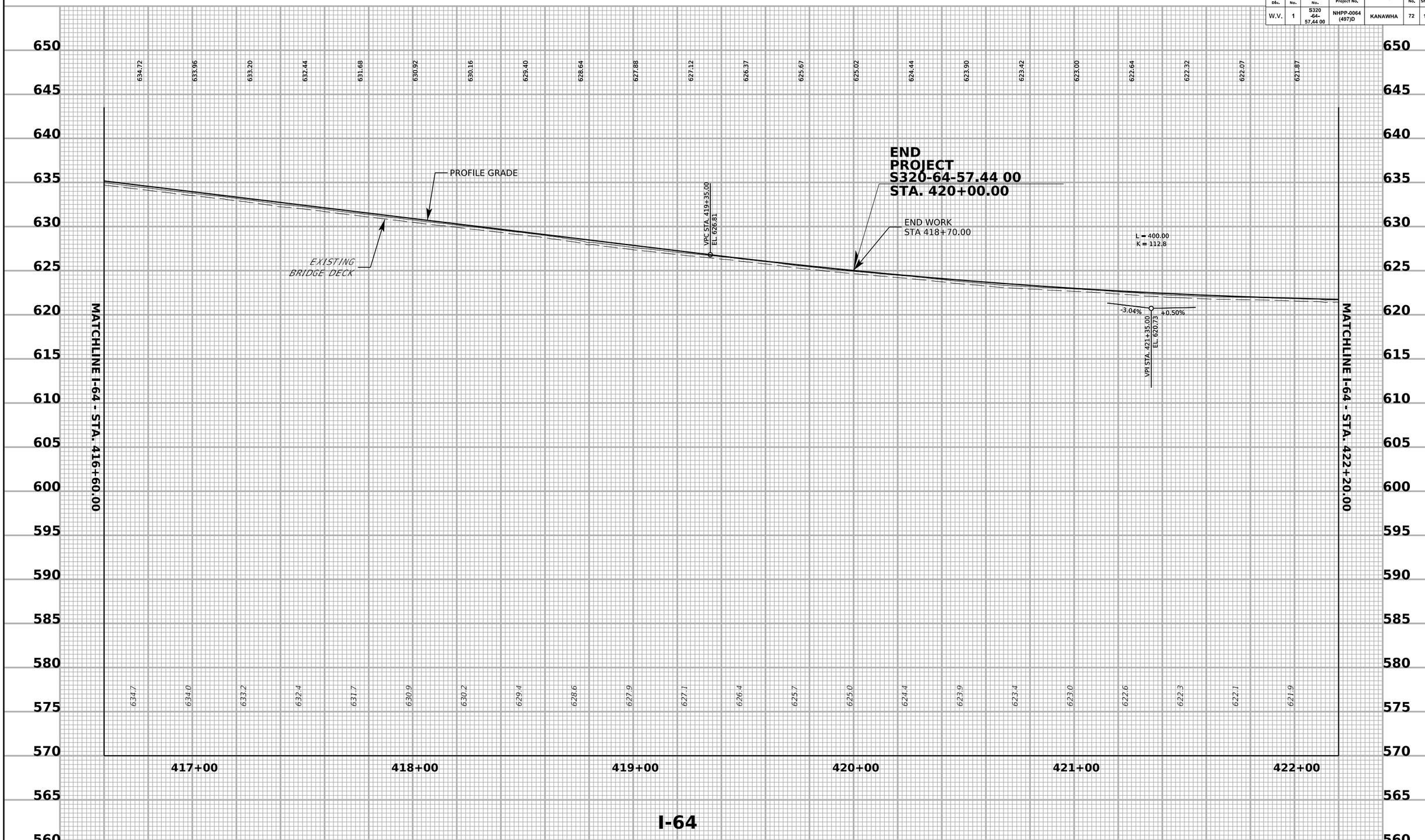

SCALES: 5 ft. 0 — 0 20 ft.

HDR ENGINEERING INC.
CHARLESTON, WV
681-341-6100

REVISION NUMBER	SHEET NUMBER	REVISION	DATE	BY

THE WEST VIRGINIA DEPARTMENT OF TRANSPORTATION
DIVISION OF HIGHWAYS

PROFILE SHEET

J04C23C03-PLAN

JCANDAL

12/10/2025

pw:\\pwdivsaeast02\Intrnet\Pdc\HDR_US_East_Q0\Documents\WV_DOT\WV DOT-Eugene_Carter_Bridge_JV\0-CAD_BRWR-2_WB\HDR\C2_Sheet_Files\01_Roadway_Cross\1HB.01_01_Pr

Public Roads Div.	State Dist. No.	State Project No.	Federal Project No.	County	Sheet No.	Total Sheets
W.V.	1	S320 -64- 57.44 00	NHPP-0064 (497)D	KANAWHA	73	108

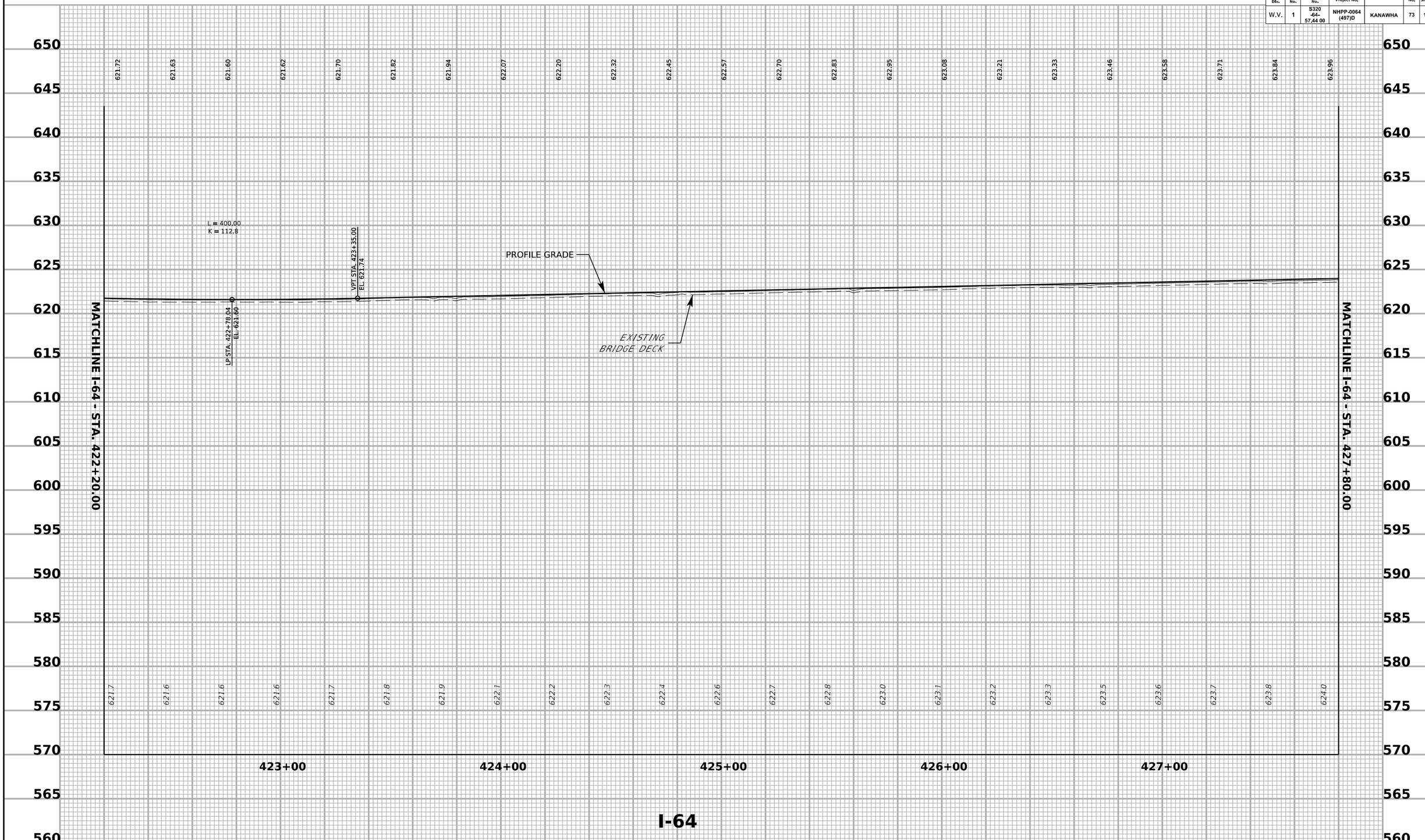

SCALES:

5 ft. 0

0 20 ft.

HDR ENGINEERING INC.
CHARLESTON, WV
681-341-6100

REVISION NUMBER	SHEET NUMBER	REVISION	DATE	BY

THE WEST VIRGINIA DEPARTMENT OF TRANSPORTATION
DIVISION OF HIGHWAYS

PROFILE SHEET

J04C23C03-PLAN

12/10/2025

JCANDAL

pw:\\pwdivsuseast02\Interw2\Hdr\HDR_US_East_Q0\Documents\WV_DOT\WV DOT-Eugene_Carter_Bridge_JVs\2_CAD_BIM\R-2_WB\HDR\R2C2_Sheet_Files\1_Roadway_Cross\1-HB.01_ro_pr

Public Roads Div.	State Dist. No.	State Project No.	Federal Project No.	County	Sheet No.	Total Sheets
W.V.	1	S320 -64- 57.44 00	NHPP-0064 (497)D	KANAWHA	74	108

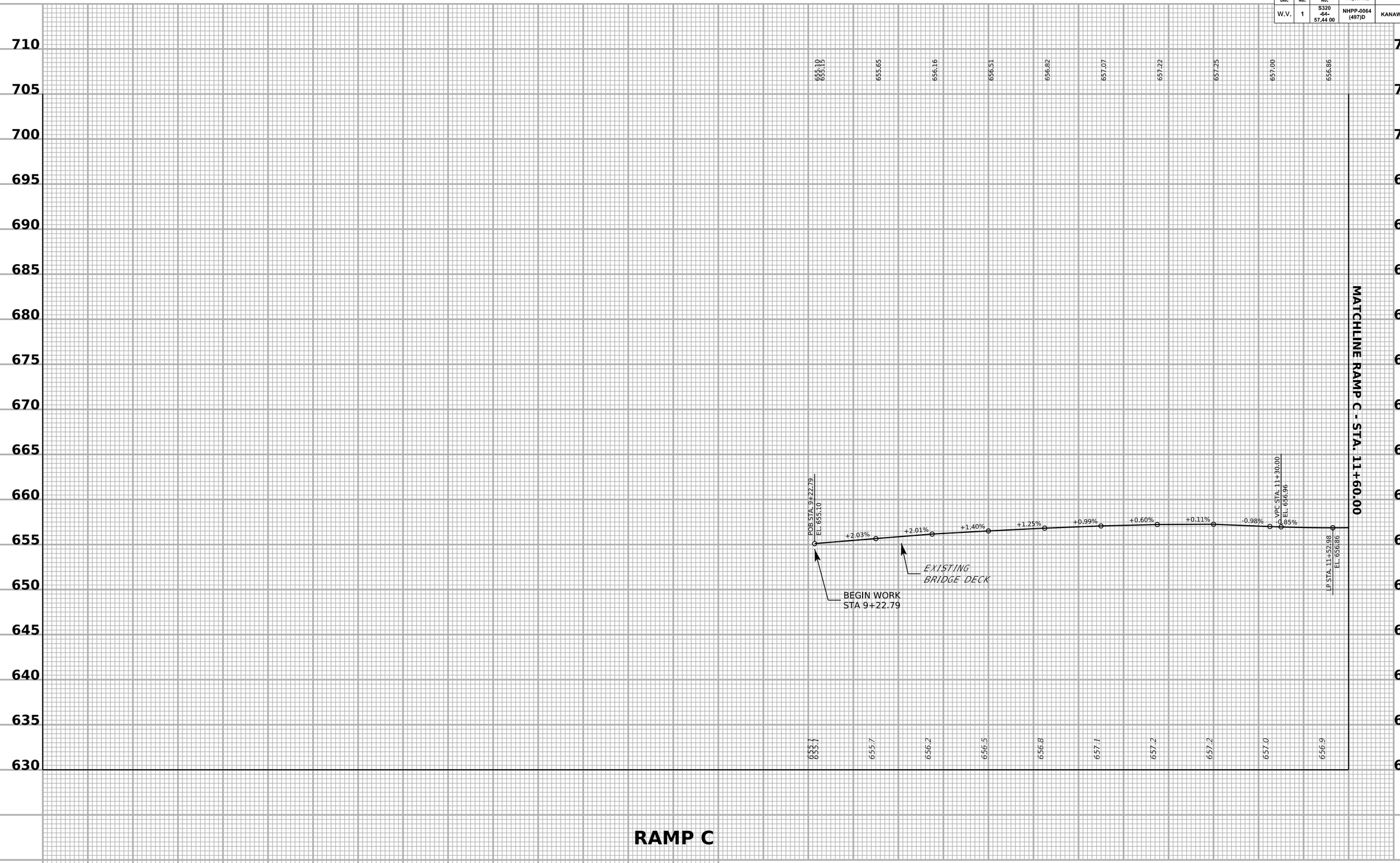

SCALES:

5 ft. 0

0 20 ft.

HDR ENGINEERING INC.
CHARLESTON, WV
681-341-6100

REVISION NUMBER	SHEET NUMBER	REVISION	DATE	BY

THE WEST VIRGINIA DEPARTMENT OF TRANSPORTATION
DIVISION OF HIGHWAYS

PROFILE SHEET

J04C23C03-PLAN

12/12/2025

JCANDAL

pw:\\wvdhsaeast02.arcadis.com:WV_DOT\WVDOT-Eugene_Carter_Bridge_J-910_CAD_BIM\06-2_WB\HDR\C2_Sheet_Files\01_Roadway_Consist\1400_rdy_pro_Eugene_Carter_Ramp C

Public Roads Div.	State Dist. No.	State Project No.	Federal Project No.	County	Sheet No.	Total Sheets
W.V.	1	S320 -64- 57.44 00	NHPP-0064 (497)D	KANAWHA	75	108

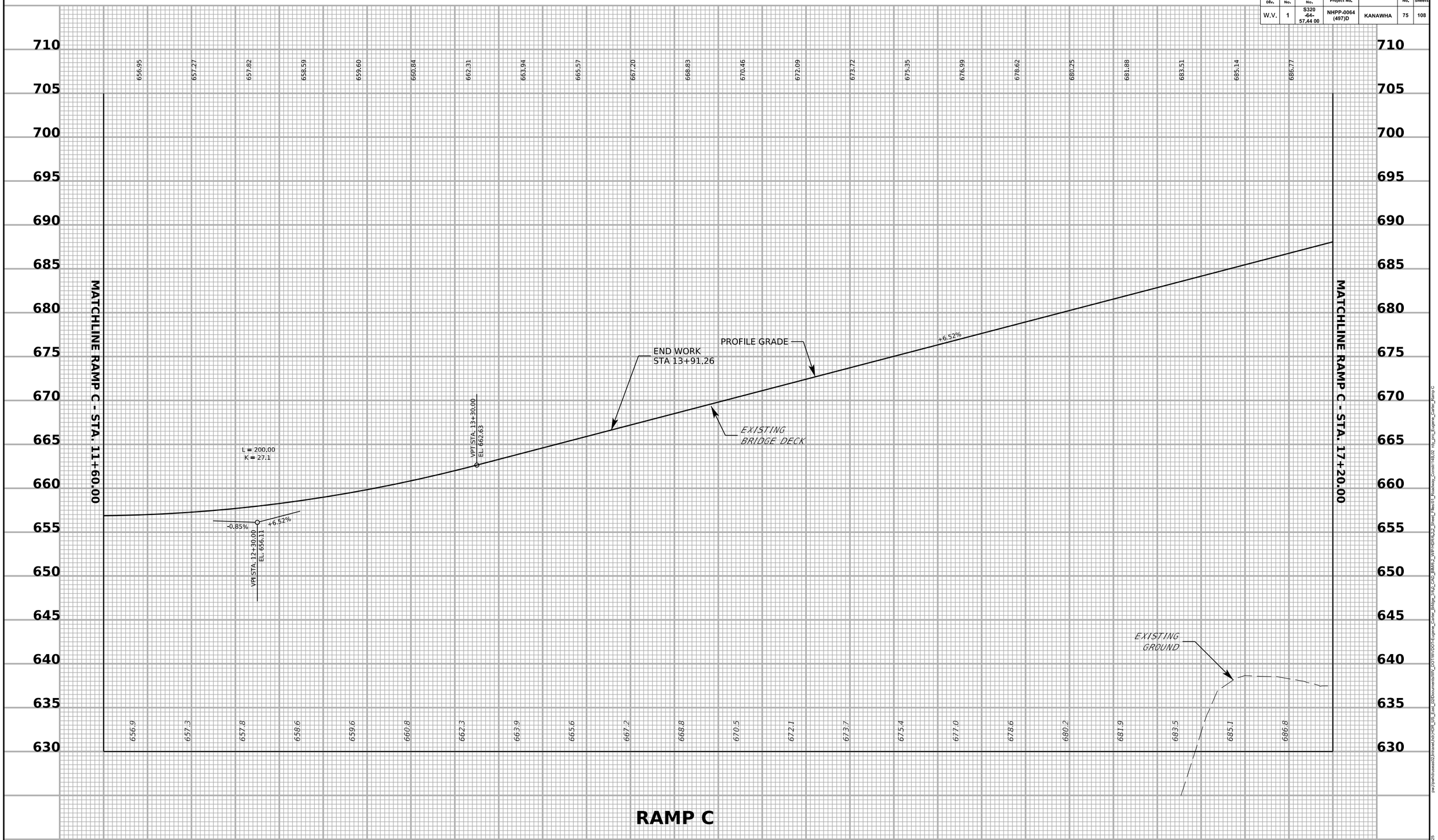

SCALES:

5 ft. 0

0 20 ft.

HDR ENGINEERING INC.
CHARLESTON, WV
681-341-6100

REVISION NUMBER	SHEET NUMBER	REVISION	DATE	BY

THE WEST VIRGINIA DEPARTMENT OF TRANSPORTATION
DIVISION OF HIGHWAYS

PROFILE SHEET

J04C23C03-PLAN

12/12/2025

JCANDAL

pw:\\pwdivisions02\hrowe\Hdr-HDR_US_East_02\Documents\WV_DOT\WV DOT-Eugene_Carter_Bridge_316\2_CAD_BIM\R2_WP\HDR\C\2_Sheet_Files\1_Roadway_Const\148.02 Proj_Proj_Engineer_Carter_Ramp C

Public Roads Div.	State Dist. No.	State Project No.	Federal Project No.	County	Sheet No.	Total Sheets
W.V.	1	S320 -64- 57.44 00	NHPP-0064 (497)D	KANAWHA	76	108

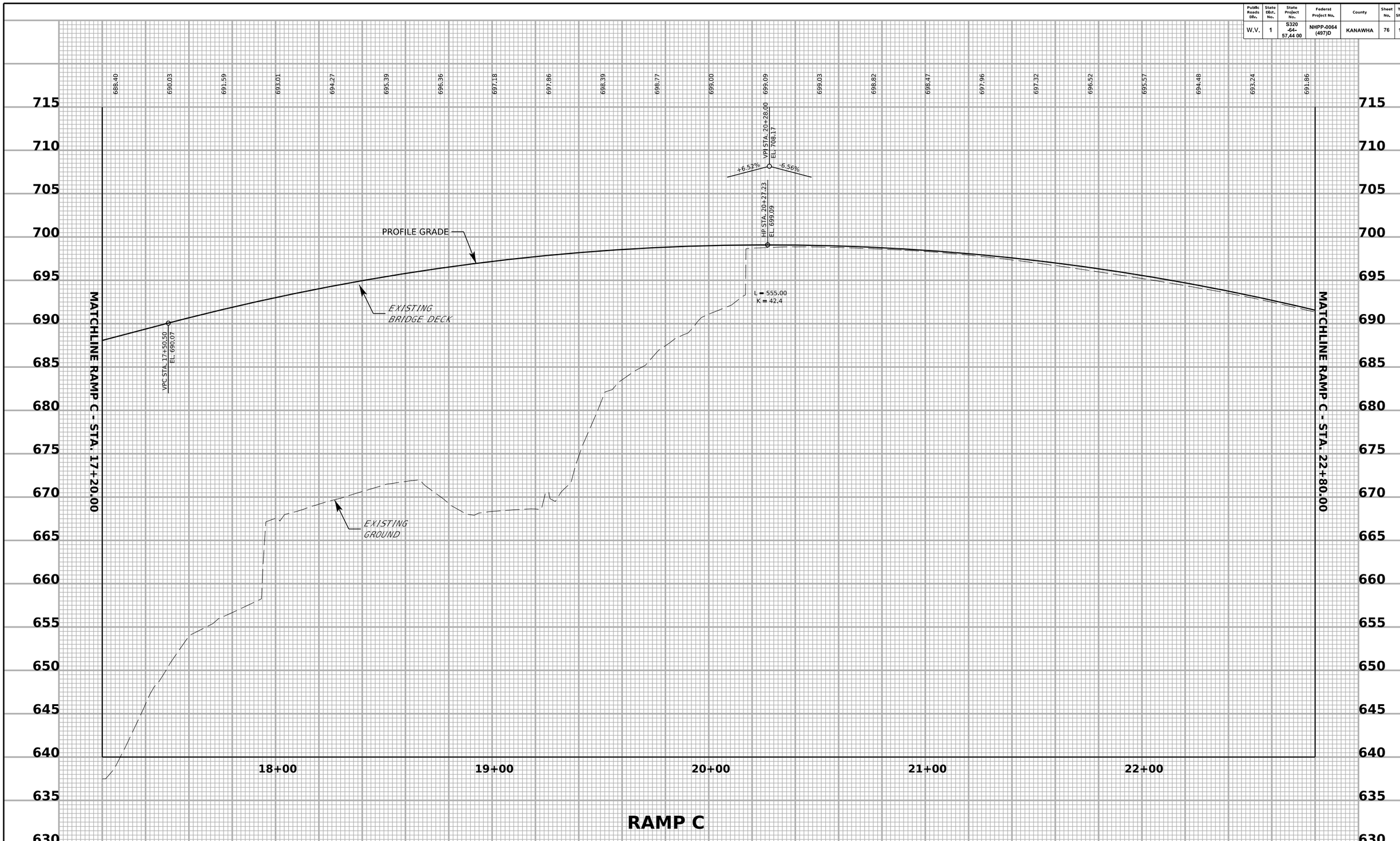

SCALES: 5 ft. 0 — 0 20 ft.

HDR ENGINEERING INC.
CHARLESTON, WV
681-341-6100

REVISION NUMBER	SHEET NUMBER	REVISION	DATE	BY

THE WEST VIRGINIA DEPARTMENT OF TRANSPORTATION
DIVISION OF HIGHWAYS

PROFILE SHEET

J04C23C03-PLAN

JCANDAL

12/10/2025

pw:\\pwfedsusaeast02.bentonville.hdr.com:WV_DOT\WVDOT-Eugene_Carter_Bridge_3-Rpt_CAD_BIMRR-2_WB\HDR\02_Sheet_Files\01_Roadway_Const\148.00 - rdy_Ph_Eugene_Carter_Bridge_Ramp C

Public Roads Div.	State Dist. No.	State Project No.	Federal Project No.	County	Sheet No.	Total Sheets
W.V.	1	S320 -64- 57,44 00	NHPP-0064 (497)D	KANAWHA	77	108

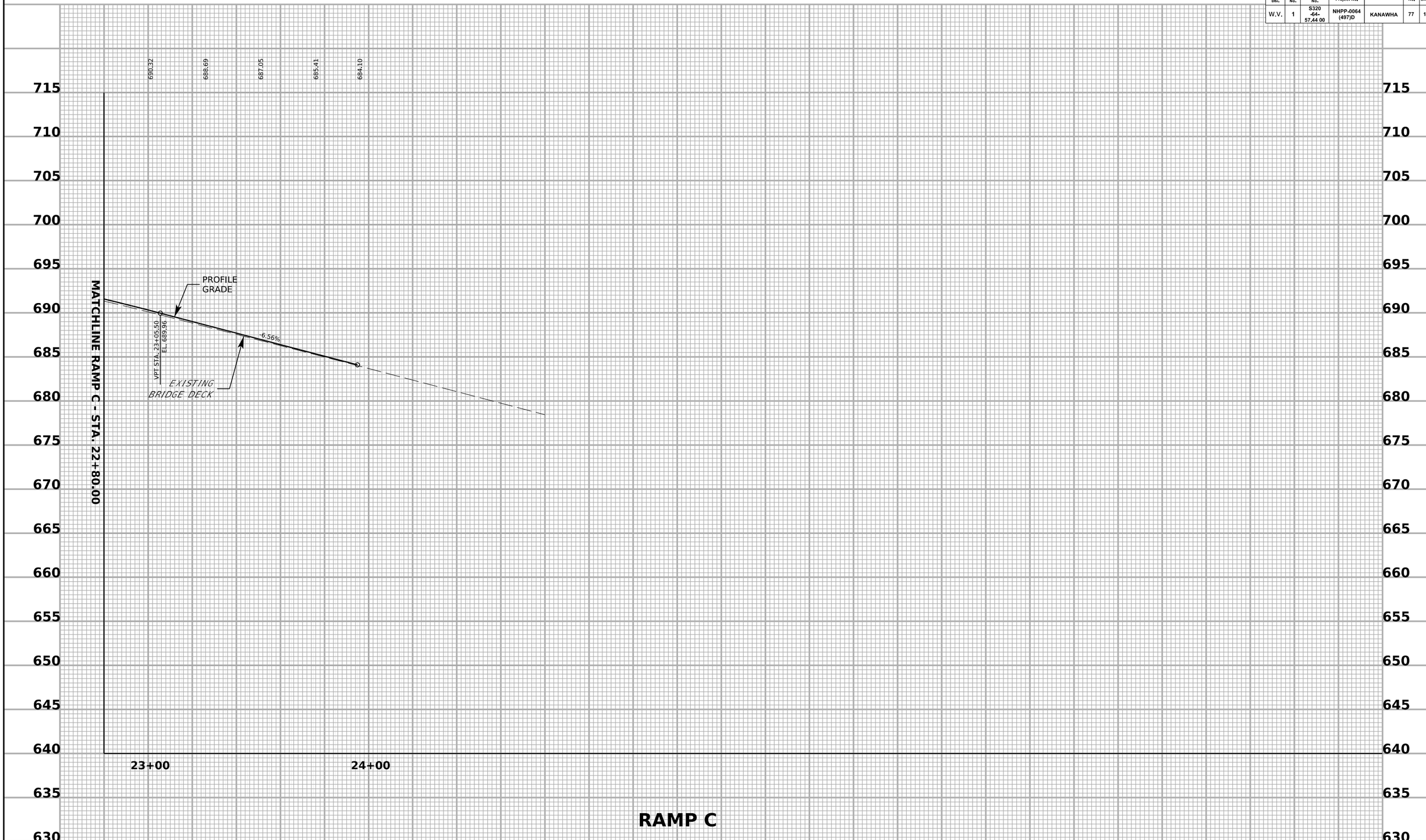

SCALES:
5 ft.
0
0
20 ft.

HDR ENGINEERING INC.
CHARLESTON, WV
681-341-6100

REVISION NUMBER	SHEET NUMBER	REVISION	DATE	BY

THE WEST VIRGINIA DEPARTMENT OF TRANSPORTATION
DIVISION OF HIGHWAYS

PROFILE SHEET

J04C23C03-PLAN

JCANDAL 12/12/2025

pw:\\pwfsdrustaas02\Alstaw\Job\HDR_US_East_GD\Documents\WV_DOT\WVDOT-Engineer_Cutler_Bridge_1362_CAD_\BMR9-2_\WP-PBR%%22_Sheet_Files\1_Roadway_Construct\48.02 mb_pro_Engineer_Cutler_Ramp C

Public Roads Div.	State Dist. No.	State Project No.	Federal Project No.	County	Sheet No.	Total Sheets
W.V.	1	S320 -64- 57.44 00	NHPP-0064 (497)D	KANAWHA	78	108

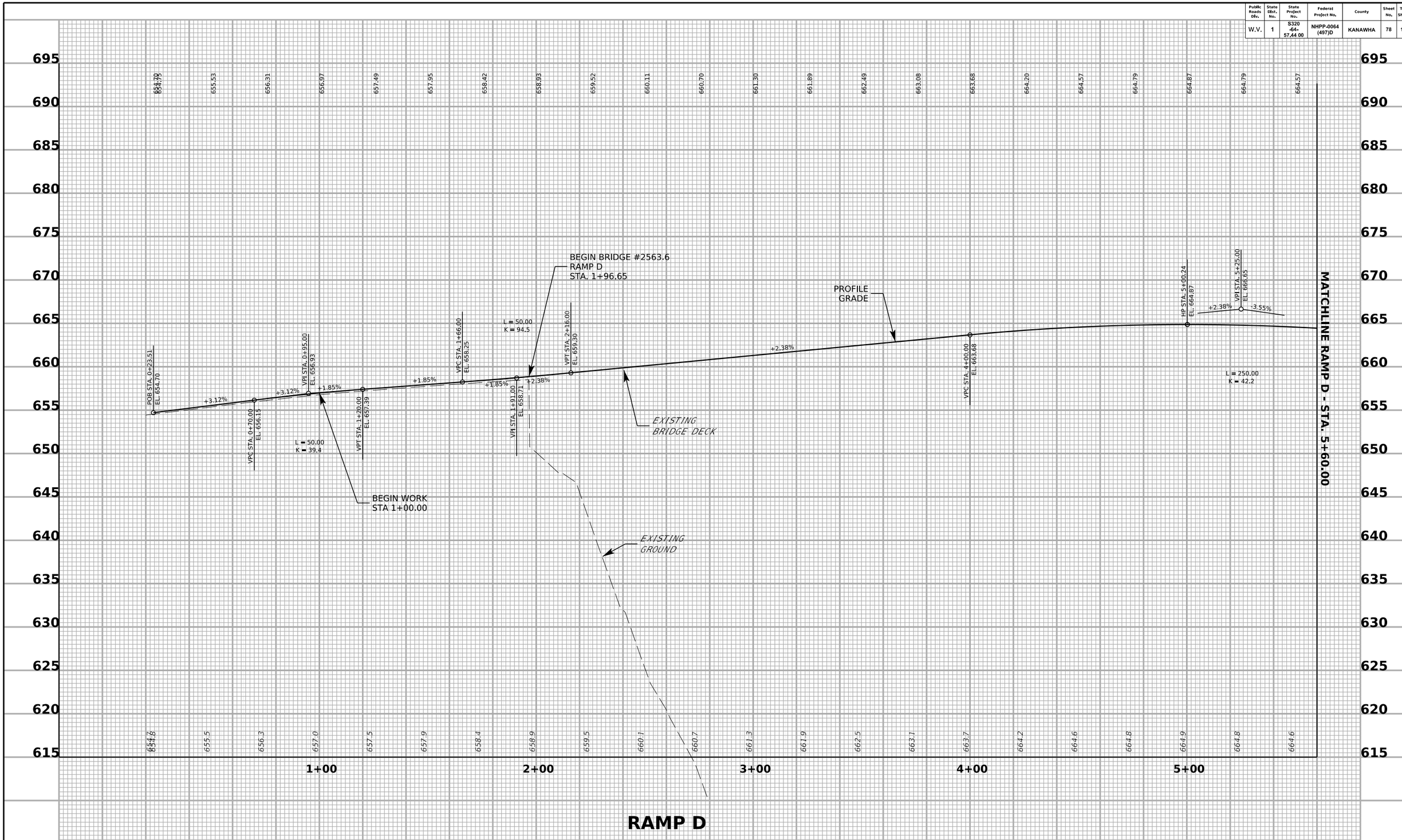

SCALES:

5 ft.
0
0
20 ft.

HDR ENGINEERING INC.
CHARLESTON, WV
681-341-6100

REVISION NUMBER	SHEET NUMBER	REVISION	DATE	BY

THE WEST VIRGINIA DEPARTMENT OF TRANSPORTATION
DIVISION OF HIGHWAYS

PROFILE SHEET

J04C23C03-PLAN

JCANDAL

12/10/2025

pw:\\pwdivsaeast02.bentrey.com:HDR_US_East_02\Documents\WV_DOT\WV DOT-Eugene_Carter_Bridge_3\NB\D_CAD_BRWR-2_WithHDPREXCE_Sheet_Files\01_Roadway_Cross\1HB.03 - rdy_Profile_Engineer_Carter_Ramp D

Public Roads Div.	State Dist. No.	State Project No.	Federal Project No.	County	Sheet No.	Total Sheets
W.V.	1	S320 -64- 57.44 00	NHPP-0064 (497)D	KANAWHA	79	108

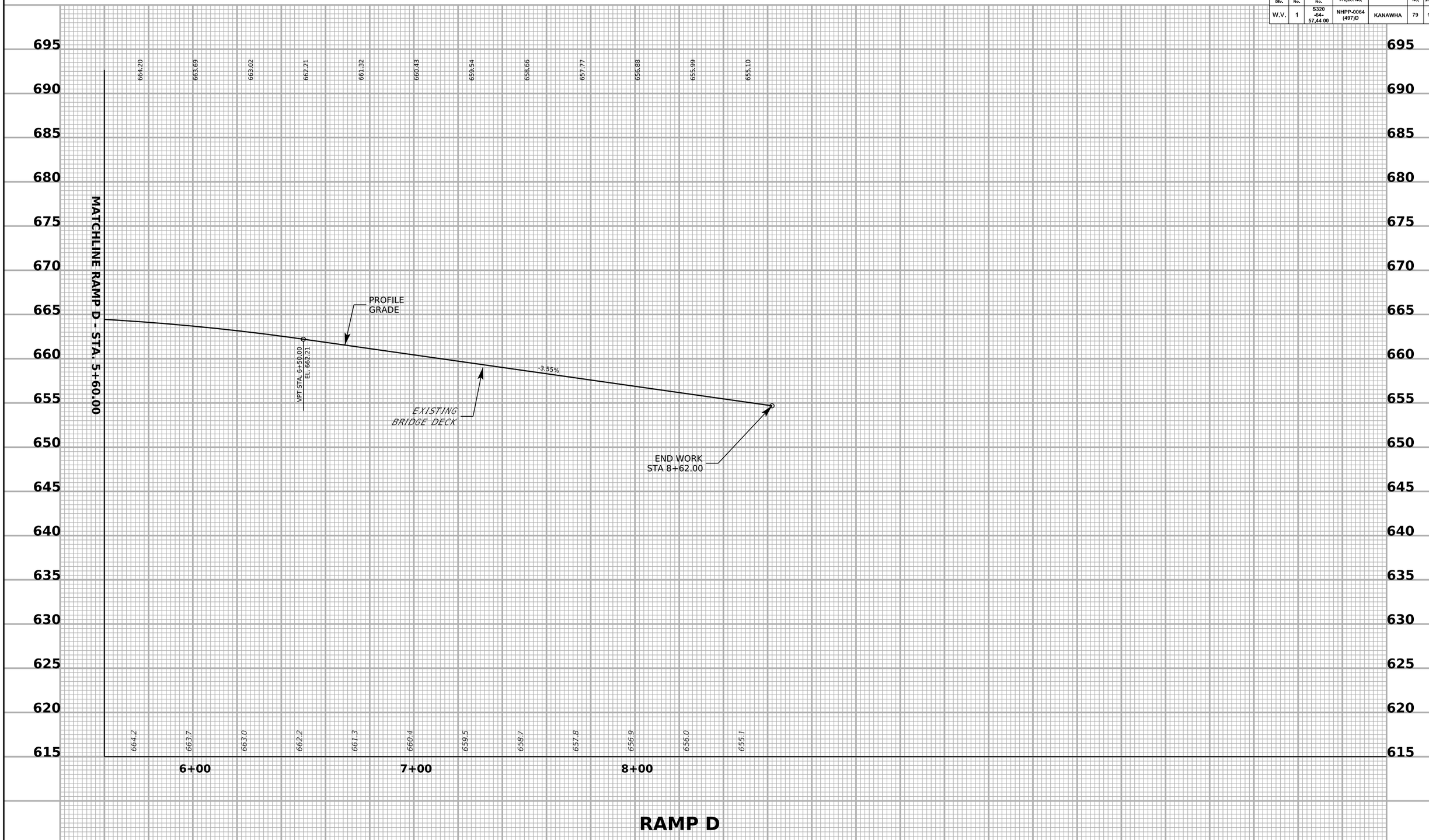

SCALES:

5 ft. 0

0 20 ft.

HDR

HDR ENGINEERING INC.
CHARLESTON, WV
681-341-6100

REVISION NUMBER	SHEET NUMBER	REVISION	DATE	BY

THE WEST VIRGINIA DEPARTMENT OF TRANSPORTATION
DIVISION OF HIGHWAYS

PROFILE SHEET

J04C23C03-PLAN

12/12/2025

JCONDAL

pw:\\pwhcbuseas02.bentley.com:PDR_US_East_02\Documents\WV_DOT\WVDOT-Eugene_Carter_Bridge_HNJ\CAD_BIM\RS_WIP\HDR\K22_Sheet_Files\11_Roadway_Cross\11148L03_03_Proj_Engineer_Carter_Ramp D

Public Roads Div.	State Dist. No.	State Project No.	Federal Project No.	County	Sheet No.	Total Sheets
W.V.	1	S320 -64- 57.44 00	NHPP-0064 (497)D	KANAWHA	80	108

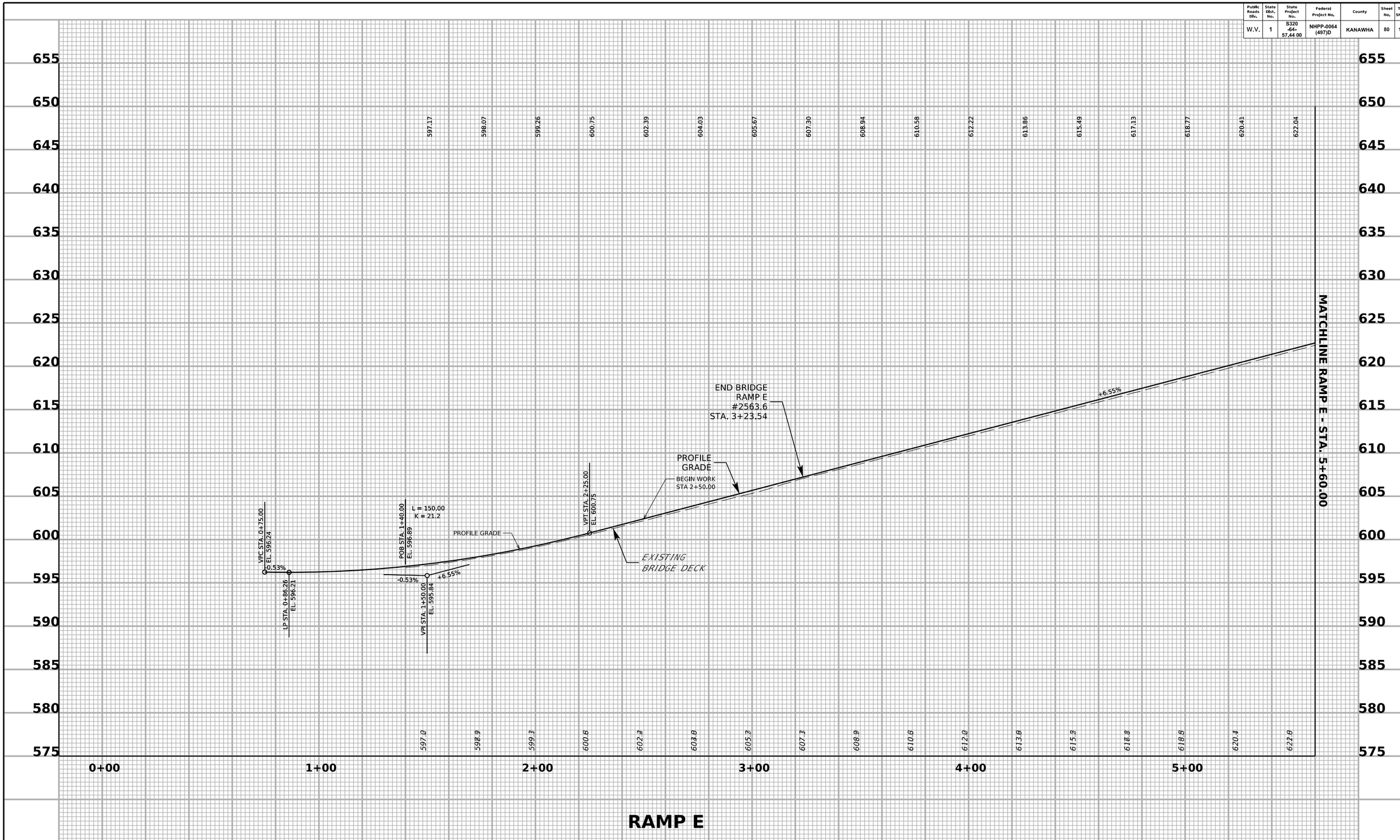

RAMP E

SCALES: 5 ft. 0 — 0 20 ft.

HDR ENGINEERING INC.
CHARLESTON, WV
681-341-6100

REVISION NUMBER	SHEET NUMBER	REVISION	DATE	BY

THE WEST VIRGINIA DEPARTMENT OF TRANSPORTATION
DIVISION OF HIGHWAYS

PROFILE SHEET

J04C23C03-PLAN

JCANDAL 12/12/2025

pw:\\wvdhsaeast02.bentrand.hdr:HDR_US_East_02\Document\WV_DOT\WVDOT-Eugene_Carter_Bridge_1-93\2_CAD_BIM\R-2_WB\HDR\C12_Sheet_Files\01_Roadway_Consist\145.04 rdy_pro_Eugene_Carter_Ramp E

Public Roads Div.	State Dist. No.	State Project No.	Federal Project No.	County	Sheet No.	Total Sheets
W.V.	1	S320 -64- 57.44 00	NHPP-0064 (497)D	KANAWHA	81	108

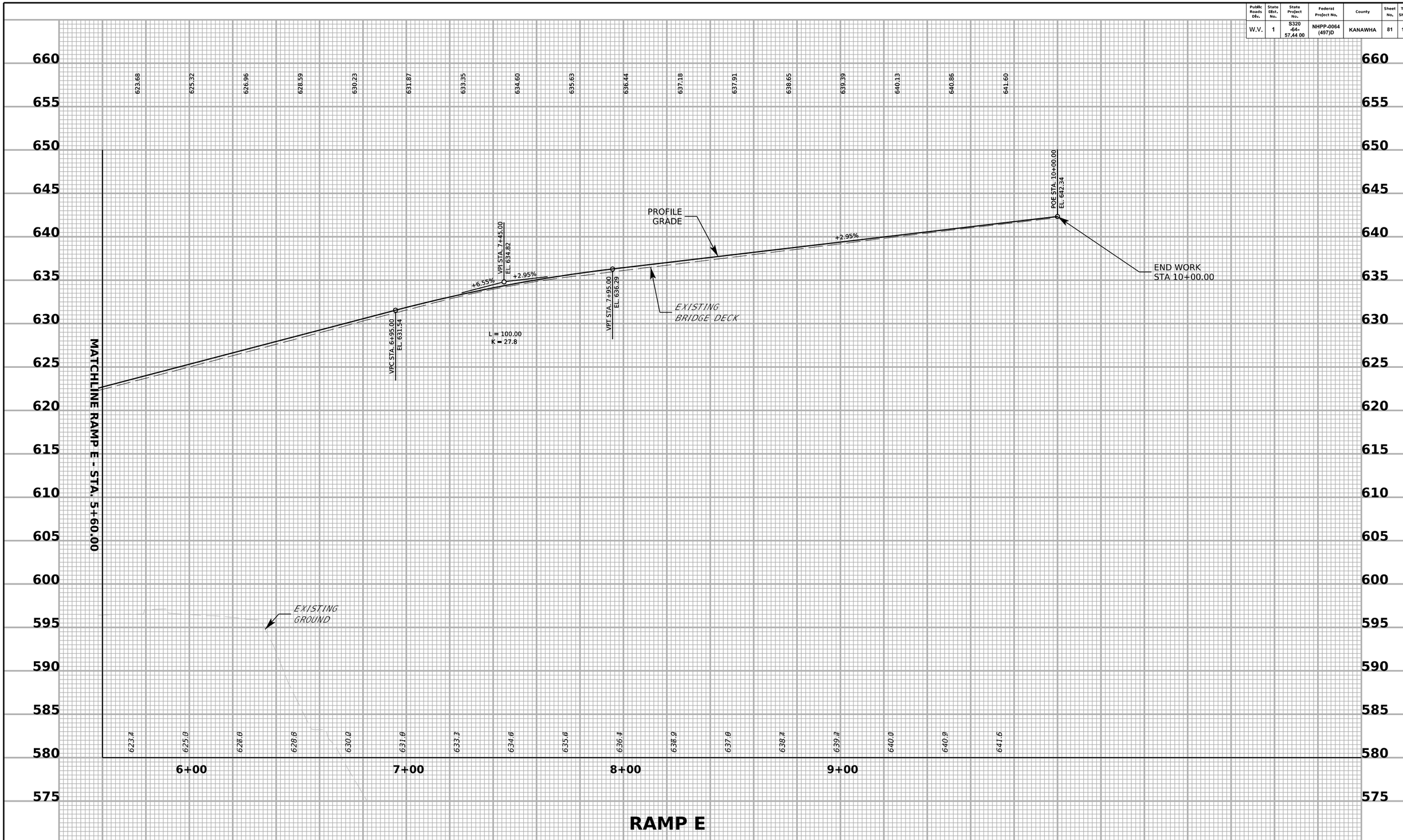

SCALES: 5 ft. 0 — 0 20 ft.

HDR ENGINEERING INC.
CHARLESTON, WV
681-341-6100

REVISION NUMBER	SHEET NUMBER	REVISION	DATE	BY

THE WEST VIRGINIA DEPARTMENT OF TRANSPORTATION
DIVISION OF HIGHWAYS

PROFILE SHEET

J04C23C03-PLAN

JCANDAL 12/12/2025

pw:\\pwdivsaeast02.bentleyhdr.com:HDR_US_East_02\Documents\WV_DOT\WV DOT-Eugene_Carter_Bridge_JVB\2_CAD_BIM\R-2_WB\HDR\R2C2_Sheet_Files\01_Roadway_Cross\1HB.04_RP_J

Public Roads Div.	State Dist. No.	State Project No.	Federal Project No.	County	Sheet No.	Total Sheets
W.V.	1	S320 -64- 57.44 00	NHPP-0064 (497)D	KANAWHA	82	108

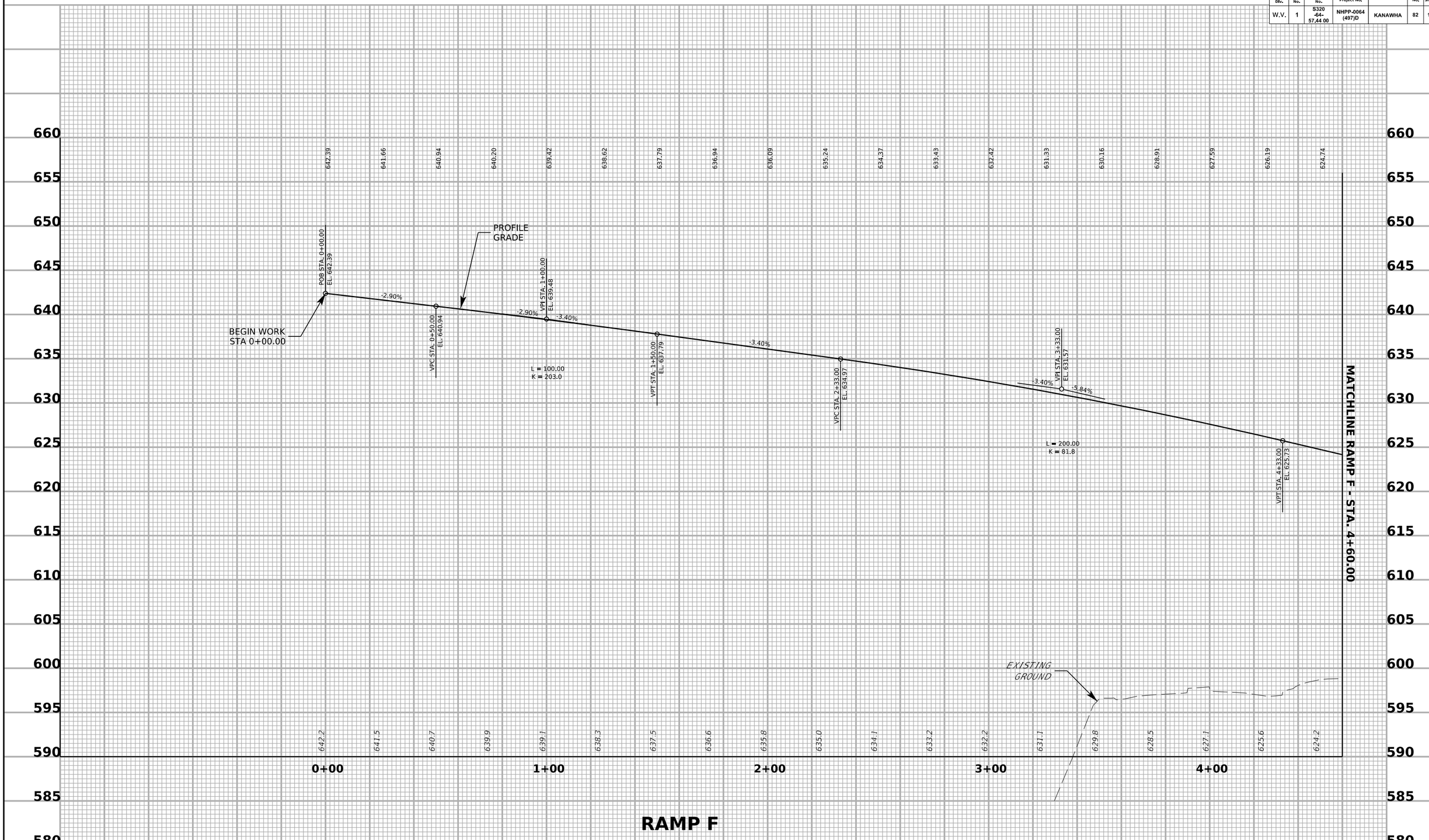

SCALES:

5 ft. 0

0 20 ft.

HDR ENGINEERING INC.
CHARLESTON, WV
681-341-6100

REVISION NUMBER	SHEET NUMBER	REVISION	DATE	BY

THE WEST VIRGINIA DEPARTMENT OF TRANSPORTATION
DIVISION OF HIGHWAYS

PROFILE SHEET

J04C23C03-PLAN

JCONDAL 12/12/2025

pw:\\pwhcsuseas02.bentrem\hdc\HDR_US_East_GIS\Documents\WV_DOT\WVDOT-Eugene_Carter_Bridge_HNJ\CAD_BIM\RS_WP\HDR\K22_Sheet_Files\01_Roadway_Cross\H148.05 ro_pro_Eugene_Carter_Ramp F

Public Roads Div.	State Dist. No.	State Project No.	Federal Project No.	County	Sheet No.	Total Sheets
W.V.	1	S320 -64- 57.44 00	NHPP-0064 (497)D	KANAWHA	83	108

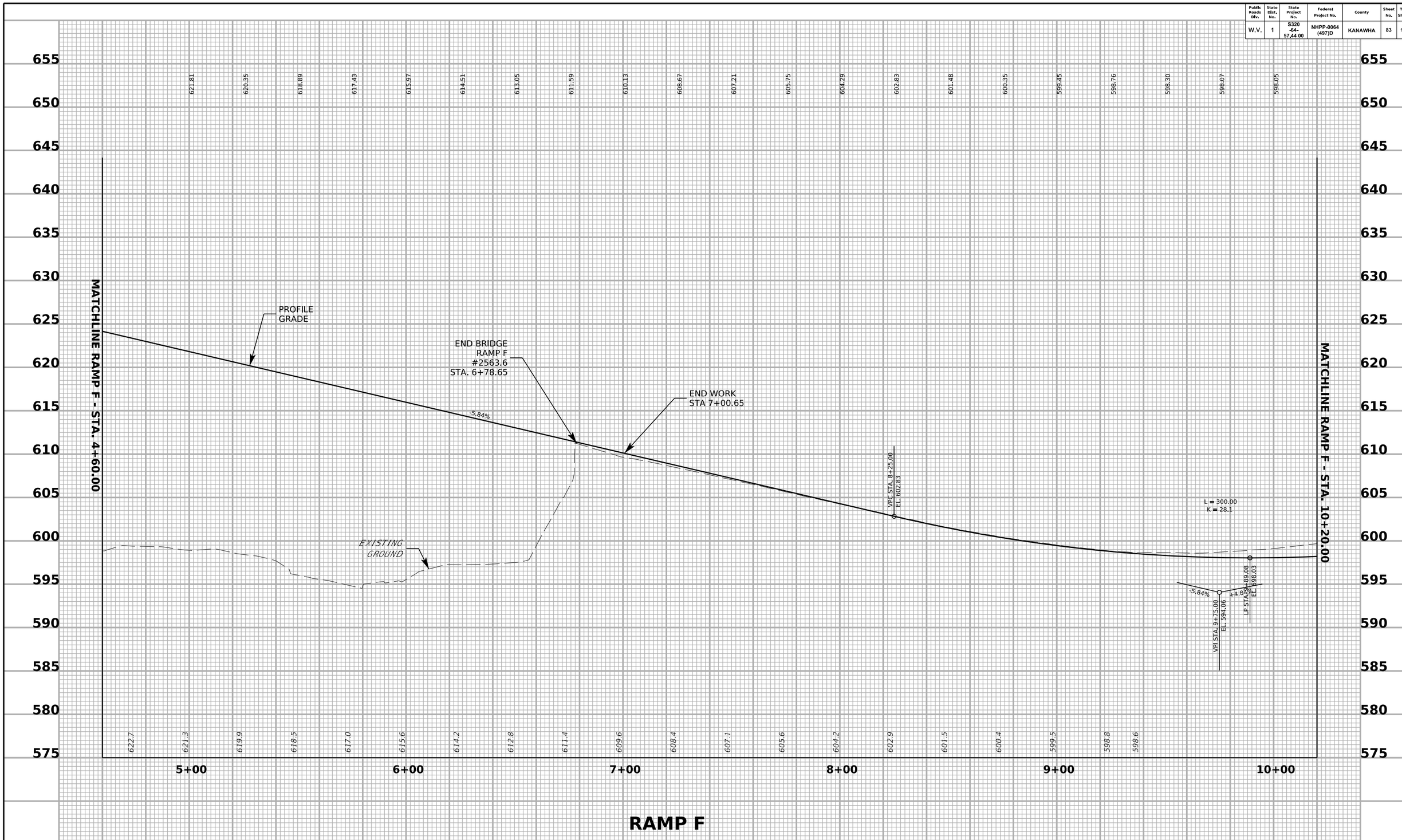

RAMP F

SCALES:

5 ft. 0

0 20 ft.

HDR ENGINEERING INC.
CHARLESTON, WV
681-341-6100

REVISION NUMBER	SHEET NUMBER	REVISION	DATE	BY

THE WEST VIRGINIA DEPARTMENT OF TRANSPORTATION
DIVISION OF HIGHWAYS

PROFILE SHEET

J04C23C03-PLAN

JCANDAL

12/12/2025

pw:\\hdrdrivewest02.bentonville\Projects\Active\WV_DOT\WVDOH-Eugene_Carter_Bridge_J-910_CAD_BIM\06-2_WB\HDR\C\2_Sheet_Files\01_Roadway_Consist\148.05 rdy_pro_Eugene_Carter_Ramp F

Public Roads Div.	State Dist. No.	State Project No.	Federal Project No.	County	Sheet No.	Total Sheets
W.V.	1	S320 -64- 57,44 00	NHPP-0064 (497)D	KANAWHA	84	108

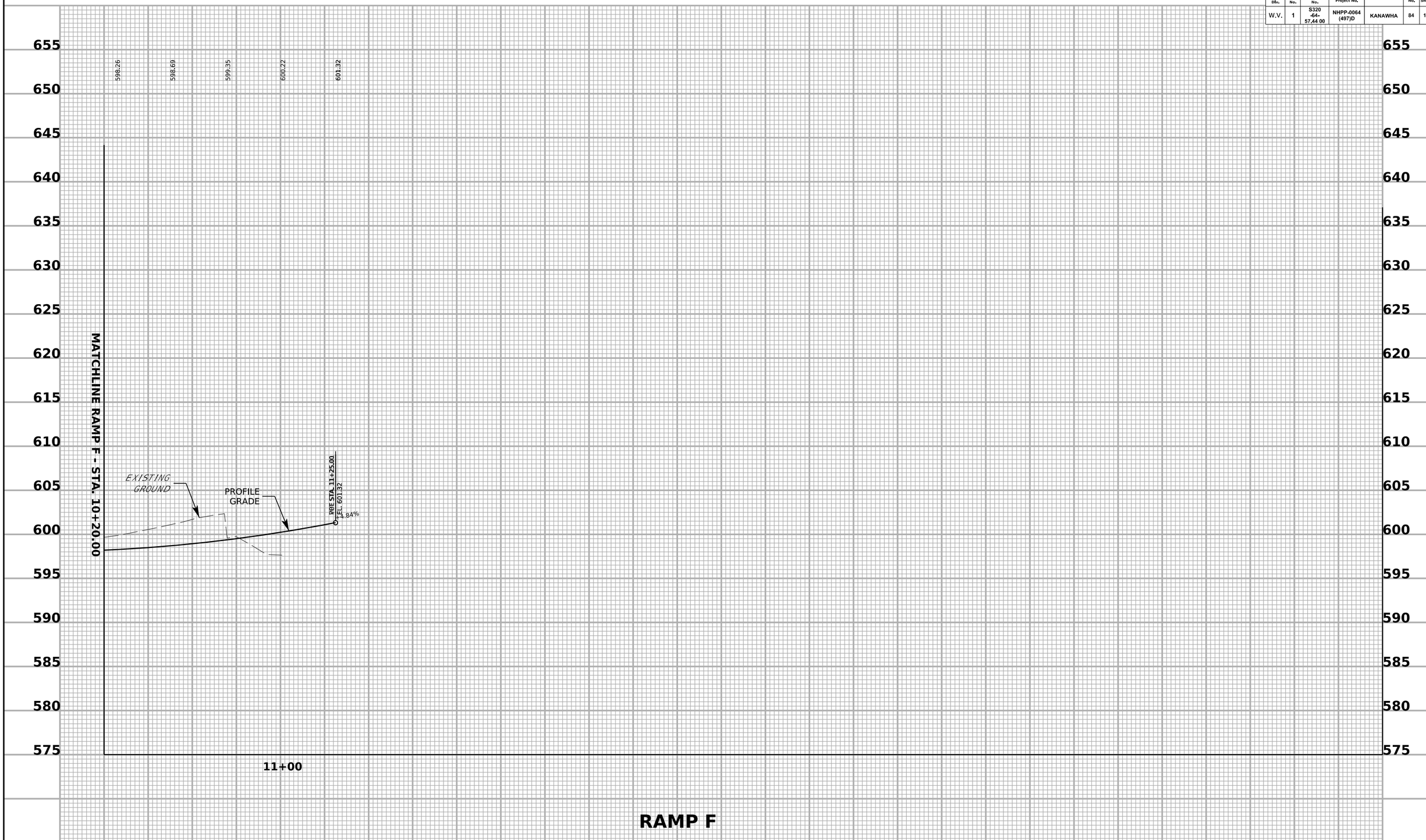

SCALES: 5 ft. 0 — 0 20 ft.

HDR ENGINEERING INC.
CHARLESTON, WV
681-341-6100

REVISION NUMBER	SHEET NUMBER	REVISION	DATE	BY

THE WEST VIRGINIA DEPARTMENT OF TRANSPORTATION
DIVISION OF HIGHWAYS

PROFILE SHEET

12/12/2025

JCANDAL

J04C23C03-PLAN

Public Roads Div.	State Dist. No.	State Project No.	Federal Project No.	County	Sheet No.	Total Sheets
W.V.	1	S320 -64- 57.44 00	NHPP-0064 (497)D	KANAWHA	104	108

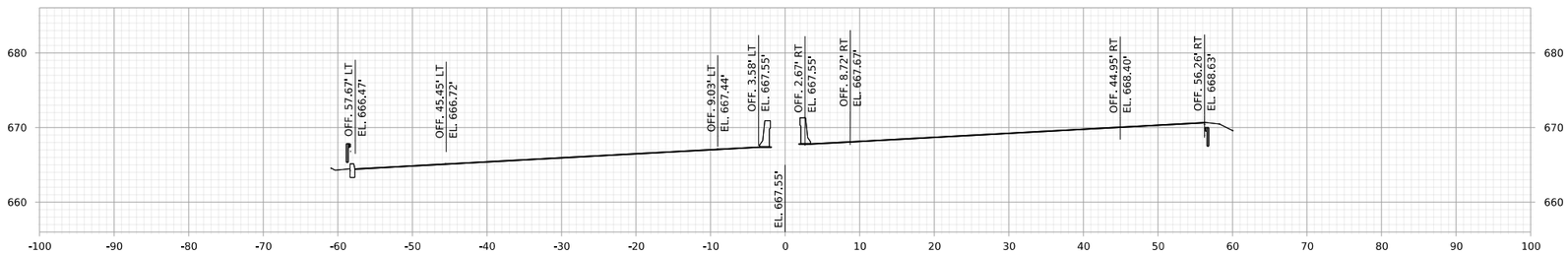

STA. 399+75.00

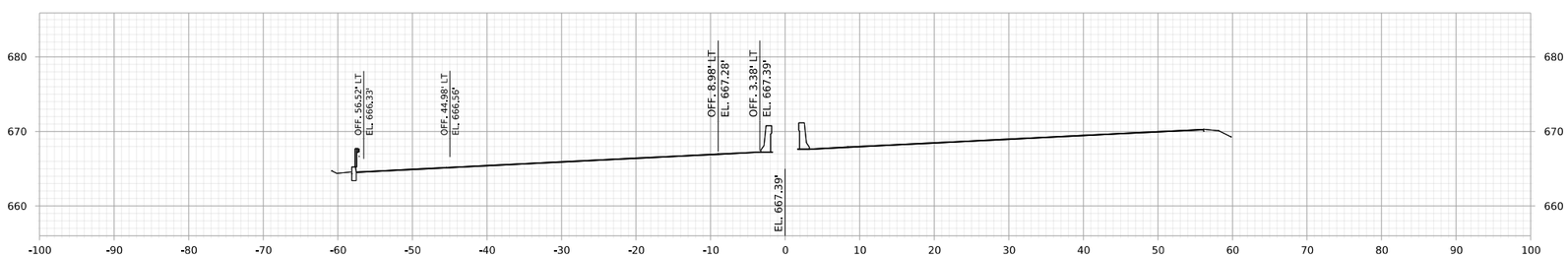

STA. 399+60.00

I-64

SCALE:
0 10 ft.
10 ft. 0

HDR ENGINEERING INC.
CHARLESTON, WV
681-341-6100

REVISION NUMBER	SHEET NUMBER	REVISION	DATE	BY

THE WEST VIRGINIA DEPARTMENT OF TRANSPORTATION
DIVISION OF HIGHWAYS

CROSS-SECTION SHEET

pw://pwhdruseas02.infranet.hdr:HDR_US_East_02/Documents/WVDOT_DOT/WVDOT-Eisenhower_Carter_Bridge_3/6.0_CAD_BM/6.2_WIP/HDR/6.2.2_Sheet_Files/01_Roadway_Constr/28.00 rdy_XCS_ECB

Public Roads Div.	State Dist. No.	State Project No.	Federal Project No.	County	Sheet No.	Total Sheets
W.V.	1	S320 -64- 57.44 00	NHPP-0064 (497)D	KANAWHA	105	108

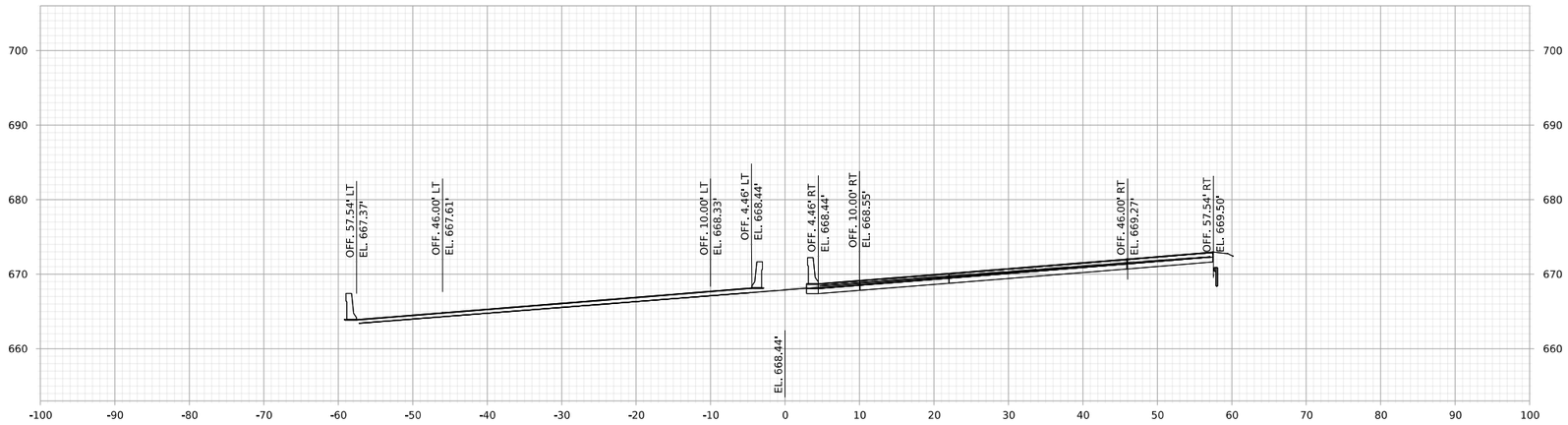

STA. 401+00.00

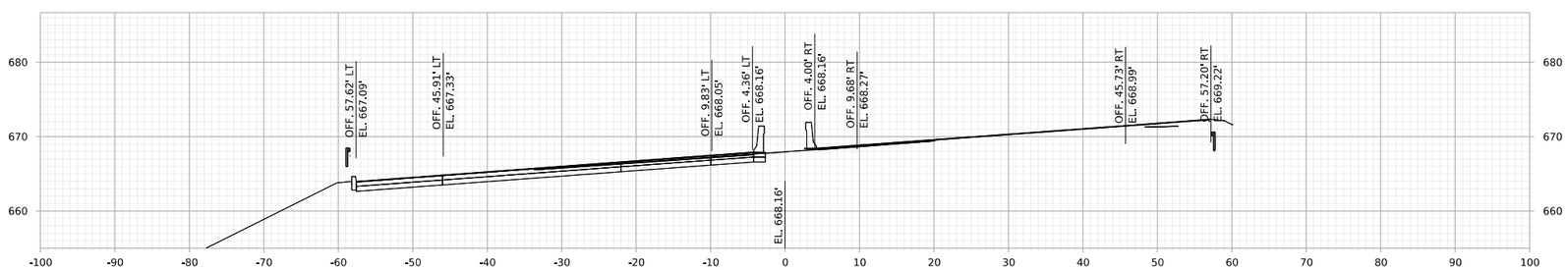

STA. 400+50.00

I-64

SCALE:
0 10 ft.
10 ft. 0

HDR ENGINEERING INC.
CHARLESTON, WV
681-341-6100

REVISION NUMBER	SHEET NUMBER	REVISION	DATE	BY

THE WEST VIRGINIA DEPARTMENT OF TRANSPORTATION
DIVISION OF HIGHWAYS

CROSS-SECTION SHEET

pw://pwhdrusecs02.intranet.hdr:HDR_US_East_02/Documents/WVDOT/WVDOT-Edgewater_Bridge_3/6.0_CAD_BIM/6.2_WIP/HDR/6.2.2_Sheet_Files/01_Roadway_Constr/28.00 rdy_XCS_ECB

J04C23C03-PLAN

Public Roads Div.	State Dist. No.	State Project No.	Federal Project No.	County	Sheet No.	Total Sheets
W.V.	1	S320 -64- 57.44 00	NHPP-0064 (497)D	KANAWHA	106	108

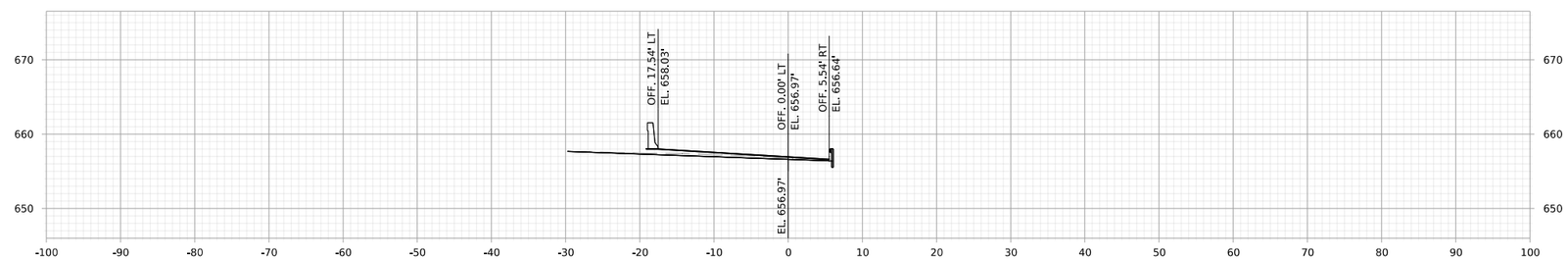

STA. 1+00.00

RAMP D

SCALE:
0 10 ft.
10 ft. 0

HDR ENGINEERING INC.
CHARLESTON, WV
681-341-6100

REVISION NUMBER	SHEET NUMBER	REVISION	DATE	BY

THE WEST VIRGINIA DEPARTMENT OF TRANSPORTATION
DIVISION OF HIGHWAYS

CROSS-SECTION SHEET

J04C23C03-PLAN

pw://pwhdrusecs02.intranet.hdr:HDR_US_East_02/Documents/WVDOT/WVDOT-Kanawha/Carter_Bridge_3/6.0_CAD_BIM/6.2_WIP/HDR/6.2.2_Sheet_Files/01_Roadway_Constr/28.00 rdy_XCS_ECB

Public Roads Div.	State Dist. No.	State Project No.	Federal Project No.	County	Sheet No.	Total Sheets
W.V.	1	S320 -64- 57.44 00	NHPP-0064 (497)D	KANAWHA	107	108

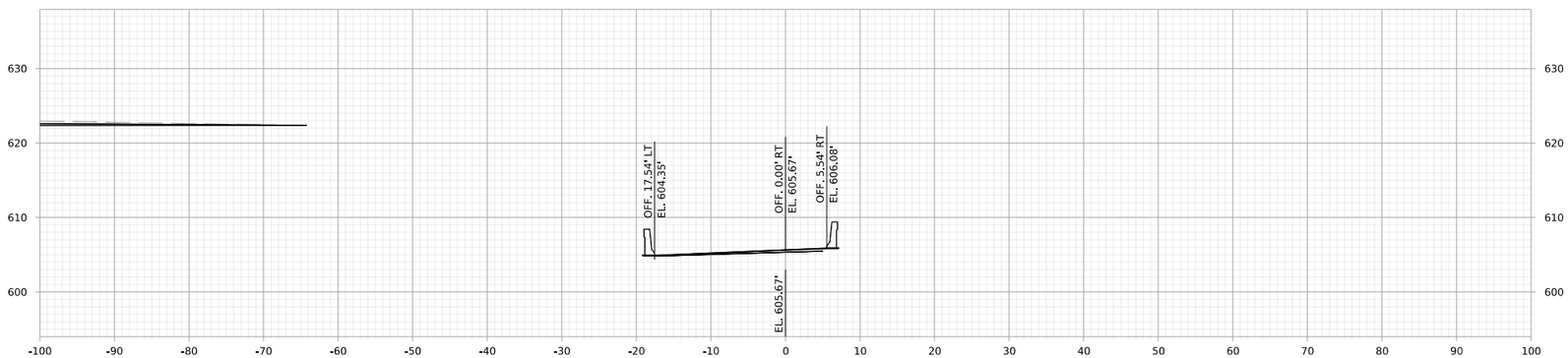

STA. 3+00.00

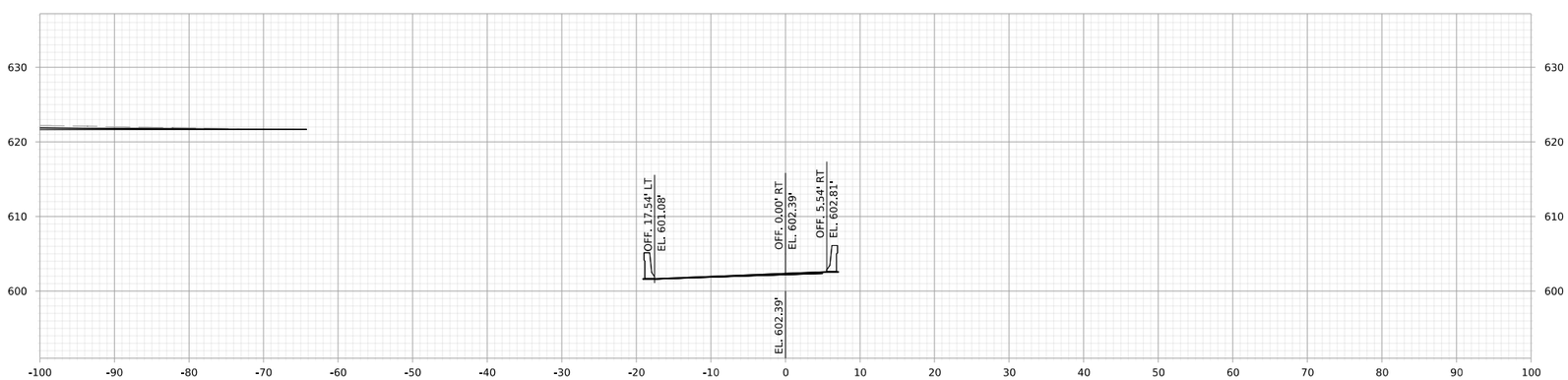

STA. 2+50.00

RAMP E

SCALE:
10 ft. 0
0 10 ft.

HDR ENGINEERING INC.
CHARLESTON, WV
681-341-6100

REVISION NUMBER	SHEET NUMBER	REVISION	DATE	BY

THE WEST VIRGINIA DEPARTMENT OF TRANSPORTATION
DIVISION OF HIGHWAYS

CROSS-SECTION SHEET

pw://pwhdruseas02.intranet.hdr:HDR_US_East_02/Documents/WVDOT/WVDOT-Elevated_Carter_Bridge_3/6.0_CAD_BIM/6.2_WIP/HDR/6.2.2_Sheet_Files/01_Roadway_Constr/28.00 rdy_XCS_ECB

Public Roads Div.	State Dist. No.	State Project No.	Federal Project No.	County	Sheet No.	Total Sheets
W.V.	1	S320 -64- 57.44 00	NHPP-0064 (497)D	KANAWHA	108	108

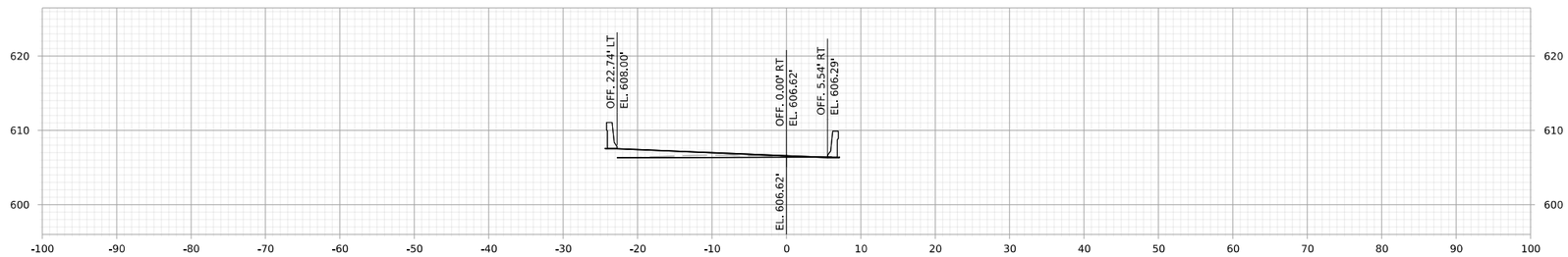

STA. 7+60.00

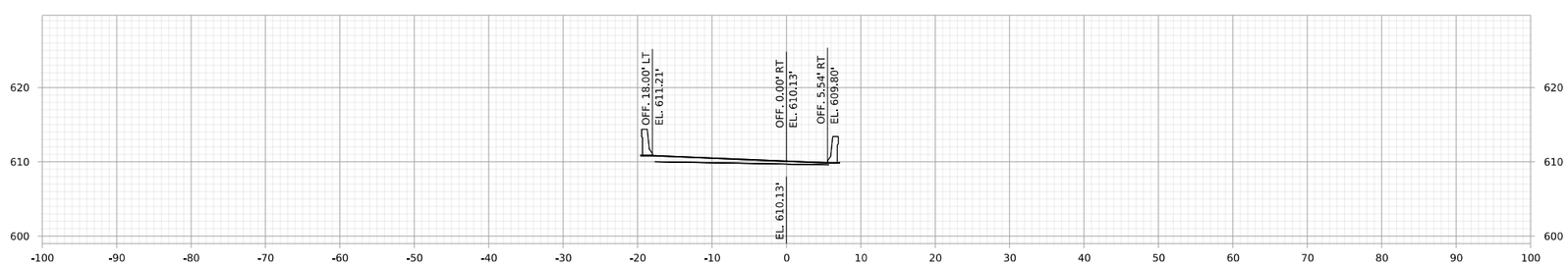

STA. 7+00.00

RAMP F

SCALE: 0 10 ft. 10 ft. 0

HDR ENGINEERING INC.
CHARLESTON, WV
681-341-6100

REVISION NUMBER	SHEET NUMBER	REVISION	DATE	BY

THE WEST VIRGINIA DEPARTMENT OF TRANSPORTATION
DIVISION OF HIGHWAYS

CROSS-SECTION SHEET

pw://pwhdrusecs02.intranet.hdr:HDR_US_East_02/Documents/WVDOT_Kanawha_Carter_Bridge_3/6.0_CAD_BIM/6.2_WIP/HDR/6.2.2_Sheet_Files/01_Roadway_Constr/28.00 rdy_XCS_ECB