WEST VIRGINIA DEPARTMENT OF TRANSPORTATION
DIVISION OF HIGHWAYS
STANDARD DETAILS BOOK
VOLUME II
SIGNING, SIGNALS, LIGHTING, MARKINGS AND ITS

ISSUE DATE: JANUARY, 2019

TABLE OF CONTENTS

SIGNING

TE1-3A	ROADSIDE SIGN SUPPORTS - STEEL BEAM TYPE
TE1-3B	ROADSIDE SIGN SUPPORTS - STEEL BEAM TYPE
TE1-3C	ROADSIDE SIGN SUPPORTS - STEEL BEAM TYPE
TE1-5A	PIPE POST SIGN SUPPORTS - TYPES 1 – 5
TE1-5B	PIPE POST SIGN SUPPORTS - TYPES 6 - 9
TE1-5C	PIPE POST SIGN SUPPORTS - MISC. DETAILS
TE1-7A	ROADSIDE SIGN SUPPORTS - U-CHANNEL
TE1-7B	ROADSIDE SIGN SUPPORTS - U-CHANNEL
TE2-1A	BRIDGE OR RETAINING WALL SIGN MOUNTING - TYPE K, 1 & 2 SUPPORTS
TE2-1B	BRIDGE OR RETAINING WALL SIGN MOUNTING - TYPE K, 3 SUPPORTS
TE2-2	BRIDGE OR RETAINING WALL SIGN MOUNTING - TYPE L, PIPE POST MOUNT
TE2-3	BARRIER WALL SIGN SUPPORT BRACKET - TYPE D
TE3-1	OVERHEAD SIGN SUPPORT-STEEL - TWO TUBE SPAN (TTS)
TE3-2	OVERHEAD SIGN SUPPORT-STEEL - ONE TUBE SPAN (OTS)
TE4-3A	OVERHEAD SIGN SUPPORT-STEEL - DOUBLE ARM CANTILEVER
TE4-3B	OVERHEAD SIGN SUPPORT-STEEL - BUTTERFLY CANTILEVER
TE4-4A	OVERHEAD SIGN SUPPORT-STEEL - SINGLE ARM CANTILEVER (HEAVY)
TE4-4B	OVERHEAD SIGN SUPPORT-STEEL - SINGLE ARM CANTILEVER (LIGHT)
TE4-5	OVERHEAD SIGN SUPPORT-STEEL - COMMON DETAILS
TE5-1A	OVERHEAD SIGN SUPPORT - BOX TRUSS SPAN
TE5-1B	OVERHEAD SIGN SUPPORT - BOX TRUSS SPAN
TE6-3A	SIGN LIGHTING SERVICE
TE6-3B	SIGN LIGHTING ENCLOSURES
TE6-3C	SIGN LIGHTING, BRACKET AND LUMINAIRE SPACING
TE6-3D	SIGN LIGHTING MOUNTING
TE7-1	ALUMINUM EXTRUDED SIGN PANEL
TE8-1	AUXILIARY SUPPORTS FOR EXIT PANELS AND SIGN EXTENSIONS
TE9-1	SIGN CLAMPS FOR TUBULAR SUPPORTS
TE11-1	HIGHWAY DELINEATORS - PLACEMENT
TE11-2A	HIGHWAY DELINEATORS - INSTALLATION DETAILS
TE11-2B	HIGHWAY DELINEATORS - INSTALLATION DETAILS
TE11-3A	HIGHWAY DELINEATORS - SPACING
TE11-3B	HIGHWAY DELINEATORS - SPACING ON DIVIDED HIGHWAYS INTERCHANGE
TE11-3C	HIGHWAY DELINEATORS - SPACING ON DIVIDED HIGHWAYS AT-GRADE INTERCHANGES
TE12-1	ROADSIDE SIGN SUPPORTS - REFLECTIVE SIGN SUPPORT STRIPS
TE16-1A	PERPENDICULAR AUXILIARY SIGN ATTACHMENT DETAILS - ONE SUPPORT
TE16-1B	PERPENDICULAR AUXILIARY SIGN ATTACHMENT DETAILS - TWO SUPPORTS
TE17-1	FLAT SHEET SIGN TO SUPPORT ATTACHMENT
TE17-2	MOUNTING DETAILS FOR BACK-TO-BACK FLAT SHEET SIGNS
TP1-1A	TYPICAL SIGN BLANK PUNCHING FOR STANDARD SIGNS - NON-SQUARE OR RECTANGULAR
TP1-1B	TYPICAL SIGN BLANK PUNCHING FOR STANDARD SIGNS - SQUARE OR RECTANGULAR
TP1-2A	TYPICAL SIGN BLANK PUNCHING FOR NON-STANDARD SIGNS - HORIZONTAL RECTANGULAR
TP1-2B	TYPICAL SIGN BLANK PUNCHING FOR NON-STANDARD SIGNS - VERTICAL RECTANGULAR
TP3-1A	TYPICAL SIGN PLACEMENT - MOUNTING HEIGHT
TP3-1B	TYPICAL SIGN PLACEMENT - OFFSET AND ORIENTATION
TP3-1C	TYPICAL SIGN PLACEMENT - MISC. DETAILS
TP3-2	CHEVRON ALIGNMENT SIGNS (W1-8) & TYPE C BRACKET
TP4-1A	TYPICAL ROUTE MARKER MOUNTING DETAILS
TP4-1B	TYPICAL ROUTE MARKER ARRANGEMENTS - 1 AND 2 SETS
TP4-1C	TYPICAL ROUTE MARKER ARRANGEMENTS - 3 AND 4 SETS
TP4-1D	TYPICAL ROUTE MARKER ARRANGEMENTS - 5 SETS
TP4-1E	TYPICAL ROUTE MARKER ARRANGEMENTS - 6 SETS
TP4-2	TYPICAL WARNING SIGN ASSEMBLY ARRANGEMENTS
TP4-3	TYPICAL XR-3 & XR-9 ARRANGEMENTS
TP4-4	TYPICAL SUPPLEMENTAL PLAQUE ARRANGEMENTS
TP5-2	TYPICAL OBJECT MARKER AND DELINEATOR LAYOUT FOR BRIDGES AND UNDERPASSES
TP6-1	SIGN IDENTIFICATION DECALS

TABLE OF CONTENTS - CONTINUED

SIGNALS

TES-01 LOOP DETECTOR INSTALLATION
TES-02 LOOP DETECTOR INSTALLATION
TES-04 CONDUIT TRENCH PAVEMENT REPLACEMENT
TES-10 MAST ARM - TYPES A1 AND A1L
TES-11 MAST ARM POLE SELECTION CHARTS AND MEMBER TABLES
TES-20 STRAIN POLE - TYPES C1 AND C1L
TES-23 WOOD POLE - TYPE D
TES-30 PEDESTAL POLES - TYPE E1, E2 AND E3
TES-31 PEDESTRIAN PUSH BUTTONS (PPB)
TES-35 FLASHER AND SIGN INSTALLATION
TES-36 INSTALLATION DETAILS FOR SCHOOL SIGNS WITH FLASHERS
TES-40 STEEL SIGNAL POLE FOUNDATIONS
TES-41 POLE BASE DETAILS
TES-42 SIGNAL CONTROLLER CABINETS
TES-50 TYPE H JUNCTION BOX - 10" X 10"
TES-80 SPAN WIRE CONNECTIONS AND SIGNAL HEAD TETHERING
TES-81 INTERCONNECT SYSTEMS
TES-90 VEHICULAR AND PEDESTRIAN HEADS
TES-91 SIGNAL FACES AND MOUNTING HARDWARE
TES-92 INTERNALLY ILLUMINATED STREET NAME SIGNS

LIGHTING

TEL-01 POLE AND SYSTEM WIRING DETAILS
TEL-06 SIGN LIGHTING WITH ROADWAY LIGHTING
TEL-09A ELECTRICAL CABLE CONNECTOR KITS - TYPES 1 - 6
TEL-09B ELECTRICAL CABLE CONNECTOR KITS - TYPES 7 - 9
TEL-11 STEEL LIGHTING POLE DETAILS - TYPE I
TEL-12 STEEL LIGHTING POLE DETAILS - TYPE II
TEL-14 WOOD LIGHTING POLE DETAILS - TYPE IV
TEL-15A ALUMINUM LIGHTING POLE DETAILS - TYPES V, VI AND VII
TEL-15B LIGHTING POLE FOUNDATION DETAILS - TYPES I, II, V, VI AND VII
TEL-16A HIGH MAST LIGHTING POLE DETAILS - TYPE X
TEL-16B HIGH MAST LIGHT POLE FOUNDATION DETAILS
TEL-16C HIGH MAST MAINTENANCE PLATFORM DETAILS
TEL-17A LIGHTING POLE SUPPORT BASE - TYPE D
TEL-17B LIGHTING POLE SUPPORT BASE - TYPE E
TEL-18 ALUMINUM TRANSFORMER BASE
TEL-19A LIGHTING POLE BLISTER DETAILS - NEW CONSTRUCTION
TEL-19B LIGHTING POLE BLISTER DETAILS - RETROFIT
TEL-20 LIGHTING CABINET WIRING DIAGRAM
TEL-21 SERVICE POLE DETAILS
TEL-22 CONTROL STATION MOUNTING DETAILS
TEL-23 GROUND MOUNTED CONTROL STATION DETAILS
TEL-30 ROAD CROSSING AND TRENCH DETAILS
TEL-31 CONDUIT DETAILS
TEL-41 JUNCTION BOX DETAILS - TYPE A
TEL-42 JUNCTION BOX DETAILS - TYPES B & C
TEL-43 JUNCTION BOX DETAILS - TYPE H
TEL-50 NAVIGATION LIGHTING DETAILS

MARKINGS

TEM-1 TYPICAL MARKINGS OF INTERCHANGE RAMPS
TEM-2 TYPICAL PAVEMENT MARKINGS (SHEET 1 OF 2)
TEM-2 TYPICAL PAVEMENT MARKINGS (SHEET 2 OF 2)
TEM-3 CHANNELIZATION, WORD AND SYMBOL MARKINGS (SHEET 1 OF 3)
TEM-3 CHANNELIZATION, WORD AND SYMBOL MARKINGS (SHEET 2 OF 3)
TEM-3 CHANNELIZATION, WORD AND SYMBOL MARKINGS (SHEET 3 OF 3)
TEM-4 RAISED PAVEMENT MARKERS - TYPES P-2 AND R-4 (SHEET 1 OF 2)
TEM-4 RAISED PAVEMENT MARKERS - TYPE S (SHEET 2 OF 2)
TEM-5 ACCESSIBLE PARKING AND SYMBOL MARKINGS
TEM-6 TYPICAL LANE REDUCTION ARROW USAGE

ITS

TEI-01A DYNAMIC MESSAGE SIGN SUPPORT DETAILS - STEEL CANTILEVER
TEI-01B DYNAMIC MESSAGE SIGN SUPPORT DETAILS - STEEL CANTILEVER
TEI-02 DYNAMIC MESSAGE SIGN SUPPORT DETAILS - STEEL SPAN
TEI-03 ROAD WEATHER INFORMATION SYSTEM (RWIS) DETAILS

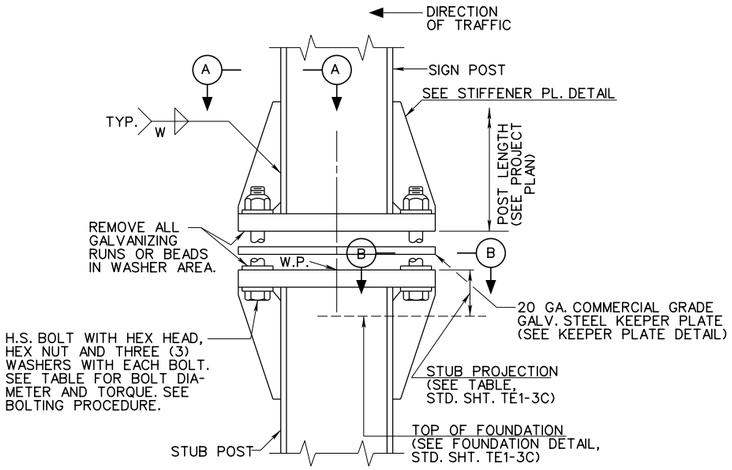

SIGN POST AND STUB POST ELEVATION

(FOR W SHAPES)

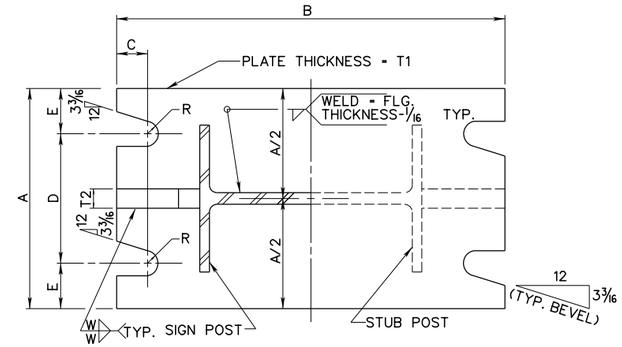

SECTION A-A SECTION B-B

(SEE TABLE FOR DIMENSIONS)

SECTIONS SHOWN ARE FOR INSTALLATIONS ON RIGHT SHOULDER AND IN GORE. PLATE SLOT BEVELS ARE OPPOSITE HAND FROM THAT SHOWN FOR INSTALLATIONS ON LEFT SHOULDER.

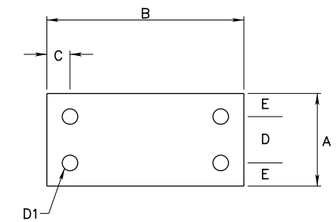

KEEPER PLATE

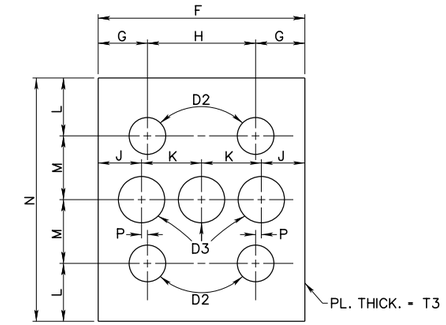

HINGE PLATE DETAIL

SEE TABLE FOR DIMENSIONS AND WEIGHT

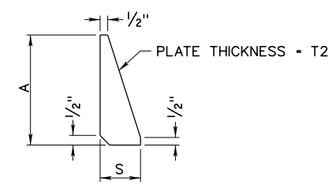

STIFFENER PLATE DETAIL

(SEE TABLE FOR DIMENSIONS)

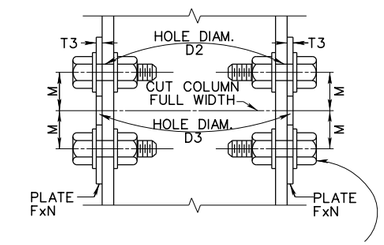

H.S. BOLT, GALV., WITH HEX. HEAD, HEX. NUT AND WASHERS TYP. (USE BEVELED WASHERS WHERE NECESSARY) FOR TIGHTENING PROCEDURE SEE NOTE 1.

DETAIL A

S AND W SHAPES (SIDE VIEW)

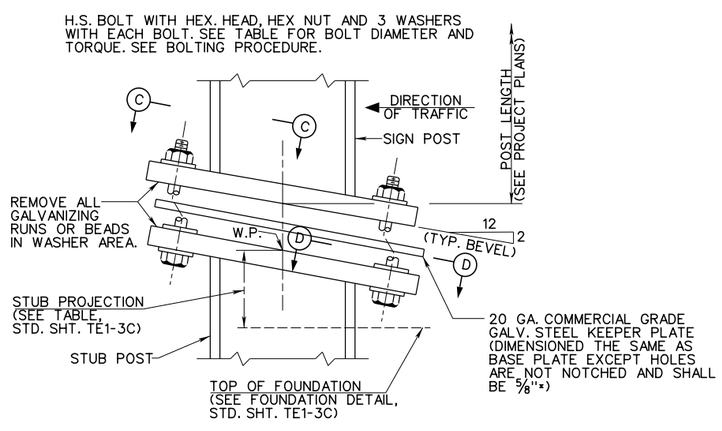

SIGN POST AND STUB POST ELEVATION

(FOR S SHAPES)

"S" SHAPES IN MEDIAN SHALL HAVE A FLAT CONNECTION (WITH NO BEVEL)

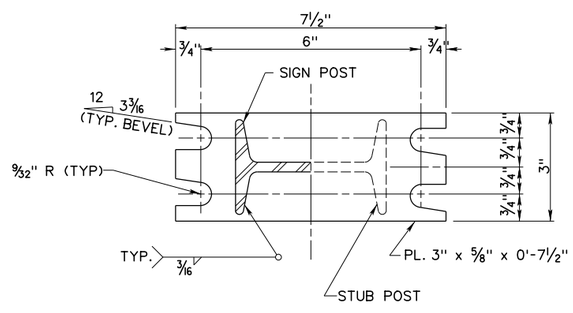

SECTION C-C SECTION D-D

SECTIONS SHOWN ARE FOR INSTALLATIONS ON RIGHT SHOULDER AND IN GORE. PLATE SLOT BEVELS ARE OPPOSITE HAND FROM THAT SHOWN FOR INSTALLATIONS ON LEFT SHOULDER.

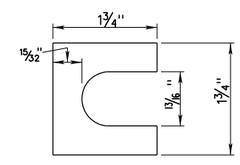

FURNISH 2-.012± THICK AND 2-.032± THICK SHIMS PER POST.

SHIM DETAIL

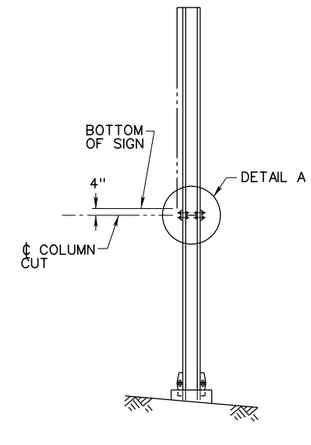

FOR ALL SHAPES

NOTES:

1. PROCEDURE FOR ASSEMBLY OF HINGE PLATE:
   - A. ASSEMBLE CONNECTION AND PRE-TIGHTEN THE BOLTS IN A MANNER CONSISTENT WITH THE SNUG TIGHTENING PROCEDURES DESCRIBED IN THE RESEARCH COUNCIL ON STRUCTURAL CONNECTIONS (RCSC) SPECIFICATION FOR STRUCTURAL JOINTS USING HIGH-STRENGTH BOLTS.
   - B. FULLY TIGHTEN THE BOLTS BY ROTATING THE NUTS IN ACCORDANCE WITH THE STANDARD SPECIFICATIONS.
2. PROCEDURE FOR ASSEMBLY OF BASE CONNECTION:
   - A. ASSEMBLE POST TO STUB WITH BOLTS AND WITH ONE FLAT WASHER ON EACH BOLT BETWEEN PLATES.
   - B. SHIM AS REQUIRED TO PLUMB POST.
   - C. BASE PLATE BOLTS ARE TO BE TORQUED USING A "CLICK" TYPE TORQUE WRENCH MEETING THE REQUIREMENTS SPECIFIED IN SECTION 657 OF THE STANDARD SPECIFICATIONS.
3. POST SHALL BE SAW CUT BEFORE GALVANIZING.
4. MATERIALS AND FABRICATION SHALL CONFORM TO THE REQUIREMENTS OF THE WEST VIRGINIA DIVISION OF HIGHWAYS SPECIFICATIONS. ALL HOLES SHALL BE DRILLED. ALL PLATE CUTS SHALL BE SAW CUTS. FLAME CUTTING WILL BE PERMITTED PROVIDED ALL EDGES ARE GROUND. METAL PROJECTING BEYOND THE PLANE OF THE PLATE FACE WILL NOT BE TOLERATED.

W.P. = WORK POINT

BASE CONNECTION DATA TABLE (IN.)													HINGE PLATE DATA TABLE (IN.) △1												
POST SIZE	BOLT SIZE	A	B	C	D	E	S	T1	T2	W	R	D1	F	G	H	J	K	L	M	N	P	T3	D2	D3	BOLT DIA.
S4 x 7.7	1/2" X 2 1/2"	SEE DETAIL										5/8	2 3/4	5/8	1 1/2	9/16	13/16	7/8	1 1/8	4	1/16	1/4	9/16	5/8	1/2
W6 x 12	5/8" X 2 3/4"	5	10	3/4	2 3/4	1 1/8	2	3/4	1/2	5/16	11/32	3/4	4	7/8	2 1/4	25/32	17/32	1 1/4	1 1/4	5	3/32	1/4	13/16	7/8	3/4
W8 x 18	3/4" X 3 1/2"	6	12 5/8	7/8	3 1/2	1 1/4	2 1/4	1	3/4	5/16	13/32	7/8	5 1/4	1 1/4	2 3/4	1	1 5/8	1 1/2	1 1/2	6	1/4	3/8	15/16	1 1/4	7/8
W10 x 22	3/4" X 3 1/2"	6	14 5/8	7/8	3 1/2	1 1/4	2 1/4	1	3/4	5/16	13/32	7/8	5 3/4	1 1/2	2 3/4	1 1/4	1 5/8	1 1/2	1 1/2	6	1/4	3/8	15/16	1 1/4	7/8

SEE TE1-3B FOR POST SELECTION
SEE TE1-3C FOR FOUNDATION DATA

△1 REVISED T3 & D3 FOR S4 & W6 SUPPORTS

WEST VIRGINIA DEPARTMENT OF TRANSPORTATION
DIVISION OF HIGHWAYS
STANDARD DETAIL

PREPARED: 8/2018

REVISION DATE
△1 4/2022

ROADSIDE SIGN SUPPORTS STEEL BEAM TYPE

STANDARD SHEET TE1-3A

J04C02C03-STDBDR c
Z:\Projects\WVDOT\Standard Details vol II\Final Submittal\Revised DGNs\Revised 4-2022\TE1-3A Rev 4-2022.dgn
8/17/2023
TRAFFIC ENGINEERING DIVISION

SUPPORT SIZE SELECTION CHART

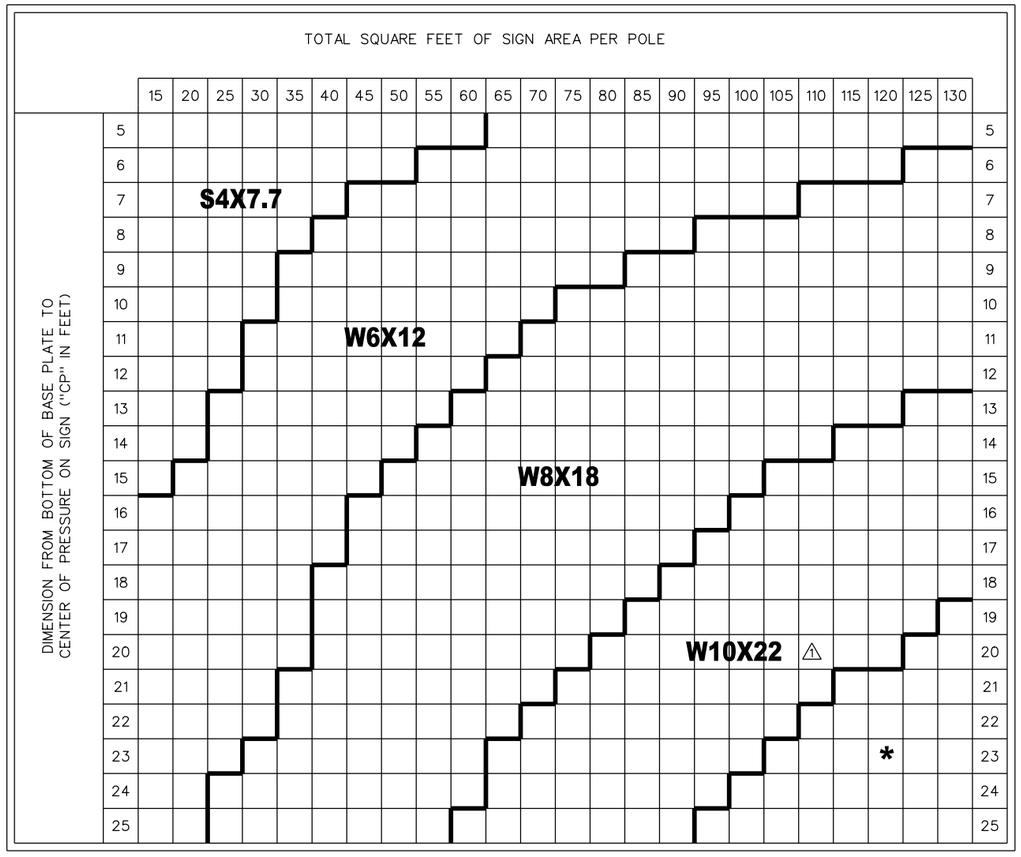

* REDESIGN USING ADDITIONAL SUPPORT

SUPPORT SPACING REQUIREMENTS

NO MORE THAN TWO (2) S4X7.7, W6X12, OR W8X18 SUPPORTS MAY BE PLACED WITIHN A SEVEN (7) FOOT WIDTH, AND NO MORE THAN ONE (1) W10X22 SUPPORT MAY BE PLACED WITHIN A SEVEN (7) FOOT WIDTH UNLESS ONE OF THE FOLLOWING REQUIREMENTS ARE MET:

- THE SUPPORTS ARE OUTSIDE OF THE CLEAR ZONE OF THE ROADWAY;
- THE SUPPORTS ARE PROTECTED FROM ERRANT VEHICLES BY GUARDRAIL OR CONCRETE BARRIER. THIS IS PROVIDED PROPER CONSIDERATION IS GIVEN TO THE BARRIER LENGTH OF NEED POINT AND THE ANGLE OF DEPARTURE OF THE ERRANT VEHICLE PER DESIGN DIRECTIVE 662 (USE THE ANGLE SPECIFIED FOR NHS PROJECTS). ALSO, SEE SHEET TP3-1C.

DIFFERENT SPACING REQUIREMENTS MAY APPLY IF AN OMNI-DIRECTIONAL BREAKAWAY DEVICE IS REQUIRED. SEE THE NOTES CONTAINED HEREIN REGARDING SUCH DEVICES.

IN NO CASE SHALL SUPPORTS BE SPACED AT A DISTANCE LESS THAN THE DIAMETER OF THE SUPPORT FOUNDATION (SEE TE1-3C). SUPPORT SPACING SHALL BE INCREASED AS REQUIRED IN SUCH CASES WITH THE APPROVAL OF THE ENGINEER.

THE SUPPORT SPACING SHALL BE DETERMINED BASED ON THE GREATER OF:

A) THE WIDEST SINGLE SIGN THAT IS ATTACHED TO ALL OF THE ASSEMBLY SUPPORTS OR
B) THE COMBINED OVERALL WIDTH OF SIGNS THAT ARE ATTACHED TO THE SAME PIECES OF RIBBING HAVING THE LARGEST OVERALL WIDTH, AND THAT ARE ATTACHED TO ALL OF THE ASSEMBLY SUPPORTS.

AN EXAMPLE OF B) WOULD BE ROUTE MARKER ASSEMBLIES AS DETAILED ON THE TP4 SHEETS. FOR DIAMOND WARNING SIGN ASSEMBLIES ON TWO SUPPORTS, SEE SHEET TP4-2 FOR SUPPORT SPACING UNIQUE TO THAT APPLICATION.

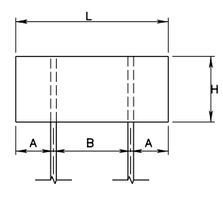

POST SPACING		
NO. OF POSTS	DIM A	DIM B
2	0.2L	0.6L
3	0.14L	0.36L
4	0.11L	0.26L
5	0.08L	0.21L

POST SPACING

NOTES:

1. THE POST SELECTION CHART IS BASED IN ACCORDANCE WITH THE AASHTO STANDARD SPECIFICATIONS FOR STRUCTURAL SUPPORTS FOR HIGHWAY SIGNS, LUMINAIRES, AND TRAFFIC SIGNALS, 4TH EDITION, 1994.
2. FOR BASE CONNECTIONS TO BE USED IN CONJUNCTION WITH THE POST SELECTION CHART SHOWN, SEE SHEET TE1-3A.
3. FOR FOUNDATION, SEE SHEET TE1-3C.

POST SELECTION PROCEDURES:

BEFORE SELECTING AND SPECIFYING THE USE OF STEEL BEAM TYPE SUPPORTS FOR FLAT SHEET SIGNS, DUE CONSIDERATION SHOULD BE GIVEN TO THE USE OF U-CHANNEL SUPPORTS, INCLUDING BACK-TO-BACK U-CHANNEL. SEE SHEET TE1-7A AND TE1-7B.

1. DETERMINE TOTAL SIGN AREA OF PANEL(S).
2. DETERMINE PRELIMINARY SELECTION OF NUMBER OF POSTS USED.
3. DETERMINE HEIGHT FROM BASE PLATE OF THE LONGEST SUPPORT TO THE CENTER OF PRESSURE * OF THE SIGN(S).
4. CALCULATE THE SQUARE FOOTAGE OF SIGN PER SUPPORT (TOTAL SQUARE FOOTAGE DIVIDED BY NUMBER OF SUPPORTS.
5. USE THE TABLE TO DETERMINE POST SIZE.
6. VERIFY THAT THE SELECTED POST SIZE MAY BE USED BASED ON MINIMUM REQUIRED POST SPACING AND/OR THE AVAILABILITY OF AN APPROVED OMNI-DIRECTIONAL BREAKAWAY DEVICE FOR THE SELECTED SIGN POST, AS APPLICABLE.
7. IF NOT, CHANGE NUMBER OF POSTS USED AND REPEAT STEPS 4, 5, & 6.

SEE THE DESIGN GUIDE FOR SIGNING FOR EXAMPLES.

OMNI-DIRECTIONAL BREAKAWAY DEVICE REQUIREMENTS

IF AN ASSEMBLY IS TO BE INSTALLED NEAR A ROADWAY AND ORIENTED SUCH THAT THE WEBS OF THE SUPPORT BEAMS ARE NOT PARALLEL TO THE ROADWAY, AN APPROVED OMNI-DIRECTIONAL BREAKAWAY DEVICE SHALL BE SPECIFIED FOR USE WITH THE SUPPORTS UNLESS ONE OF THE FOLLOWING REQUIREMENTS ARE MET:

- THE SUPPORTS ARE OUTSIDE OF THE CLEAR ZONE OF THE ROADWAY;
- THE SUPPORTS ARE PROTECTED FROM ERRANT VEHICLES BY GUARDRAIL OR CONCRETE BARRIER. THIS IS PROVIDED PROPER CONSIDERATION IS GIVEN TO THE BARRIER LENGTH OF NEED POINT AND THE ANGLE OF DEPARTURE OF THE ERRANT VEHICLE PER DESIGN DIRECTIVE 662 (USE THE ANGLE SPECIFIED FOR NHS PROJECTS). ALSO, SEE SHEET TP3-1C.

NOTE, AN APPROVED OMNI-DIRECTIONAL BREAKAWAY DEVICE MAY NOT BE AVAILABLE FOR ALL OF THE SUPPORT SIZES LISTED. IN ADDITION, SUPPORT SPACING REQUIREMENTS FOR EACH APPROVED OMNI-DIRECTIONAL DEVICE MAY VARY FROM THOSE SHOWN HEREIN. A DEVICE THAT DOES NOT REQUIRE ADJUSTMENT OF THE SUPPORT SPACING TO MEET THE DEVICE REQUIREMENTS SHALL BE USED. IF NONE ARE AVAILABLE, THE STANDARD SPACING BETWEEN SUPPORTS MAY BE ADJUSTED AT THE DISCRETION OF THE ENGINEER IN ORDER TO MEET THE DEVICE SUPPORT SPACING REQUIREMENTS. OTHERWISE, THE SUPPORT TYPE/SIZE OR ASSEMBLY LOCATION MUST BE ADJUSTED TO MEET THE REQUIREMENTS HEREIN.

OMNI-DIRECTIONAL BREAKAWAY DEVICES SHAL BE INSTALLED IN ACCORDANCE WITH THE MANUFACTURER'S RECOMMENDATIONS. IF SPECIFIC TORQUE VALUES ARE SPECIFIED FOR FASTENERS OF THE DEVICE, THEY SHALL BE TORQUED USING A "CLICK" TYPE TORQUE WRENCH MEETING THE REQUIREMENTS SPECIFIED IN SECTION 657 OF THE STANDARD SPECIFICATIONS.

* CENTER OF PRESSURE IS THE VERTICAL DISTANCE MEASURED FROM THE LOWEST POINT WHERE A SUPPORT MEETS THE GROUND TO THE CENTROID OF THE SIGN ASSEMBLY.

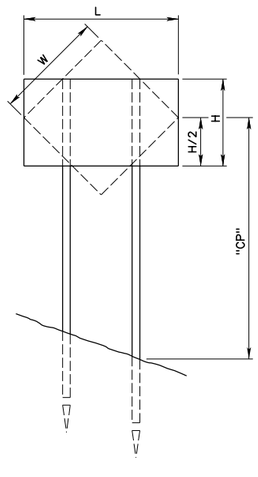

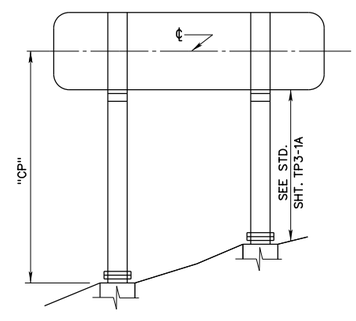

CUT SECTION

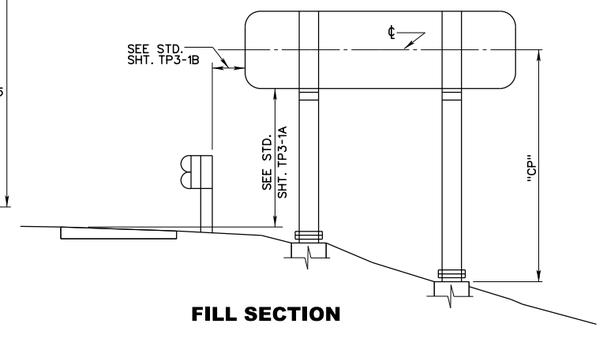

FILL SECTION

CENTER OF PRESSURE

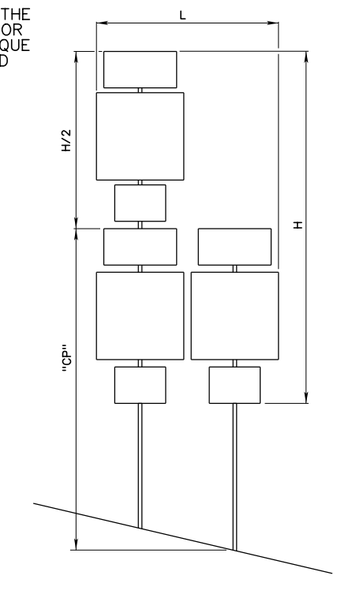

ROUTE MARKER

⚠1 REMOVED NOTE ALLOWING USE BEHIND GR OR ON BENCH

WEST VIRGINIA DEPARTMENT OF TRANSPORTATION
DIVISION OF HIGHWAYS
STANDARD DETAIL

PREPARED: 8/2018
REVISION DATE
⚠1 4/2022

ROADSIDE
SIGN SUPPORTS
STEEL BEAM TYPE

STANDARD SHEET TE1-3B

TRAFFIC ENGINEERING DIVISION

8/17/2023 Z:\Projects\WVDOT\Standard Details vol IV\Final Submittal\Revised DGNs\Revised 4-2022\TE1-3B Rev. 4-2022.dgn

J04C02C03-STDBOR c

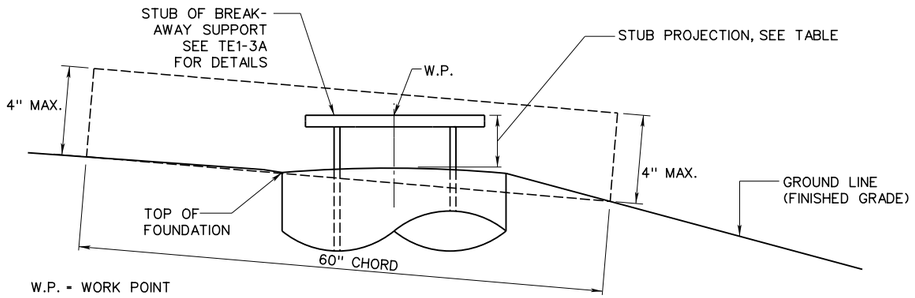

DETAIL 1

THE PROJECTION OF THE STUB ABOVE GROUND LEVEL IS TO NOT EXTEND ABOVE A 60 INCH WIDE CHORD WHICH EXTENDS 4 INCHES ABOVE THE GROUND LEVEL ON EACH END AS SHOWN ON DETAIL 1.

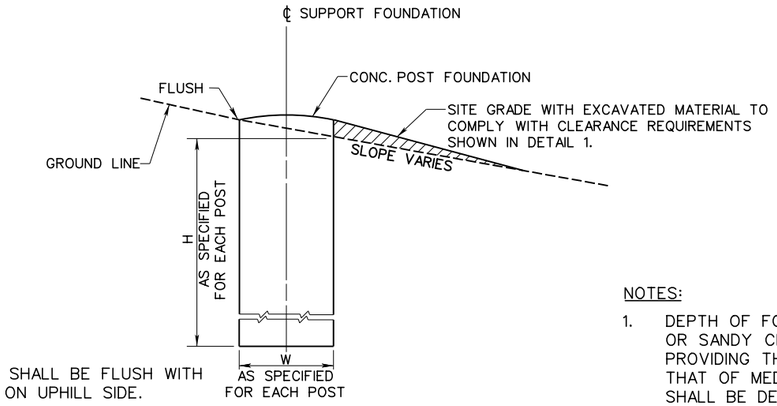

NOTE:
FOOTING SHALL BE FLUSH WITH GROUND ON UPHILL SIDE.

FOUNDATION IN SLOPE

NOTES:

1. DEPTH OF FOUNDATIONS IS BASED ON AN ASSUMED SOIL SUCH AS MEDIUM CLAY OR SANDY CLAY. THESE FOUNDATIONS MAY BE USED IN OTHER TYPE SOILS PROVIDING THAT THE SOIL'S RESISTANCE TO LATERAL LOADS IS NOT LESS THAN THAT OF MEDIUM CLAY, OR A MAXIMUM BEARING OF 3000 LBS/SQ. FT. FOUNDATIONS SHALL BE DEEPENED AS DIRECTED BY THE ENGINEER TO ADAPT TO LOCAL SOIL CONDITIONS.
2. DEPTH OF FOUNDATIONS SHALL BE MEASURED FROM THE DOWNHILL SIDE OF THE SLOPE FROM THE TOP OF THE UNEXCAVATED MATERIAL AS SHOWN ON THE DRAWING.
3. THE TOPS OF ALL FOUNDATIONS SHALL BE FINISHED SMOOTH WITH THE CONCRETE SLOPING SLIGHTLY DOWNWARD FROM THE STUB TO THE EDGE OF THE FOOTER IN ORDER TO FACILITATE DRAINAGE.
4. IF THE SLOPE IS 4:1 OR GREATER AND IT IS NOT POSSIBLE TO BUILD UP THE DOWNHILL SIDE OF THE GROUND SLOPE IN ORDER TO ALLOW THE TOP OF THE FOUNDATION TO BE LEVEL. THE CONTRACTOR SHALL INCORPORATE A FORM AS DESCRIBED IN SECTION 657 OF THE STANDARD SPECIFICATIONS.

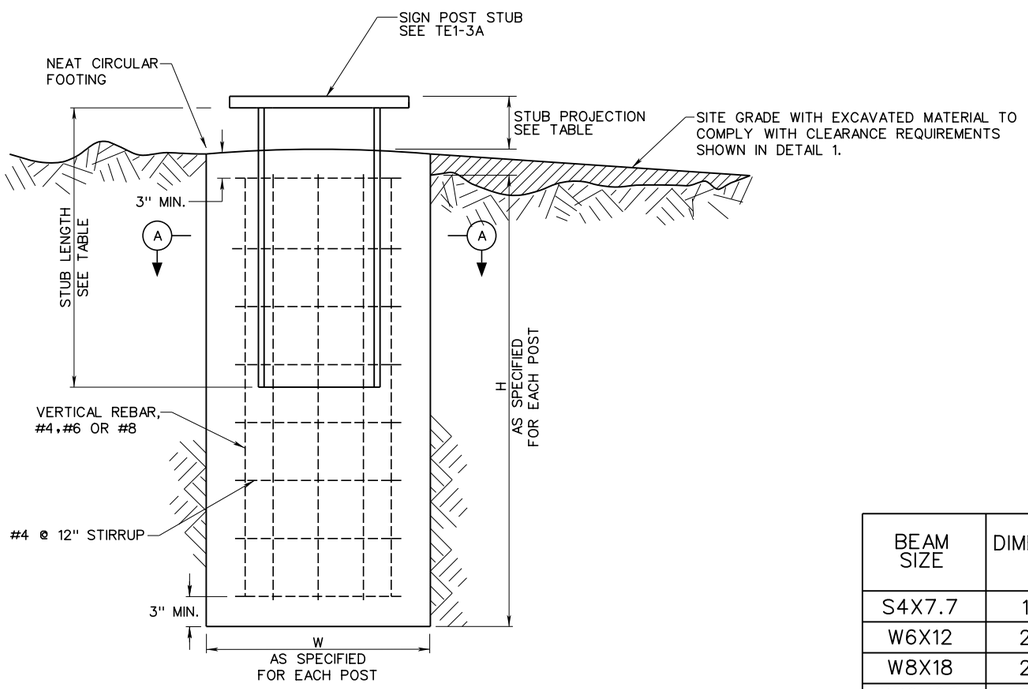

ELEVATION

FOUNDATION DETAIL

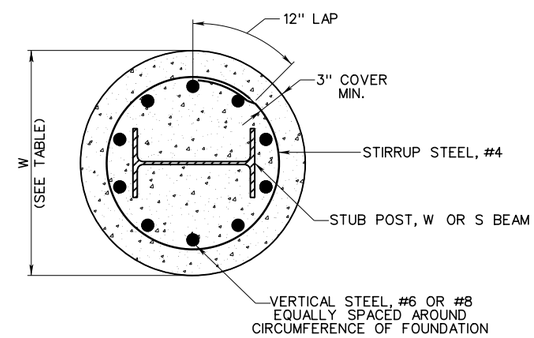

SECTION A-A

FOUNDATION REQUIRED PER POST

BEAM SIZE	DIMENSION W	DIMENSION H✳ △1	CUBIC YARDS OF CONCRETE △1	VERTICAL STEEL △1	STIRRUP STEEL	STUB LENGTH	STUB PROJECTION
S4X7.7	1'-6"	4'-0"	0.3	6-#4	#4 @ 12"	1'-6"	3½"
W6X12	2'-6"	4'-0"	0.7	6-#4	#4 @ 12"	2'-0"	3"
W8X18	2'-6"	5'-6"	1.0	6-#6	#4 @ 12"	2'-6"	3"
W10X22	2'-6"	6'-6"	1.2	6-#8	#4 @ 12"	3'-0"	2½"

THE VOLUME OF CONCRETE SHOWN IN TABLE DOES NOT INCLUDE ADDITIONAL CONCRETE THAT MAY BE REQUIRED WHEN THE FOUNDATION IS IN A SLOPE AND MUST BE EXTENDED SO THAT THE TOP OF THE FOUNDATION IS FLUSH WITH THE UPHILL SIDE. SEE DETAIL ABOVE.

✳FOR EXCEPTIONS SEE NOTE 1

△1 REVISED FOUNDATION FOR ALL SUPPORT SIZES

WEST VIRGINIA DEPARTMENT OF TRANSPORTATION
DIVISION OF HIGHWAYS
STANDARD DETAIL

PREPARED: 8/2018
REVISION DATE
△1 4/2022

ROADSIDE SIGN SUPPORTS STEEL BEAM TYPE

STANDARD SHEET TE1-3C

TRAFFIC ENGINEERING DIVISION

J04C02C03-STDBDR c

8/17/2023

Z:\Projects\WVDOT\Standard Details vol II\Final Submittal\Revised DGNs\Revised 4-2022\TE1-3C Rev 4-2022.dgn

MARKER	DESCRIPTION
P	24" x 12" CARDINAL 24" x 12" TO 21" x 15" JCT
Q	24" x 24" US OR STATE OR OR INTERSTATE 30" x 24" ROUTE MARKER
R	21" x 15" DIRECTIONAL ARROW

NOTES:

1. MINIMUM DISTANCE FROM GROUND TO TOP OF SIGN(S) (ALL 5 TYPES) IS NINE (9) FEET.
2. VERTICAL SPACING BETWEEN P & Q AND Q & R PANELS SHALL BE ONE INCH (1").
3. TYPE OF SUPPORT TO BE DETERMINED BY NUMBER OF ROUTE MARKER SHIELDS.
4. SEE TE1-5C FOR SIGN CONNECTION DETAILS. TYPE 1 CLAMPS AS SHOWN ON TE9-1 MAY BE USED ON EXISTING PIPE POST STRUCTURES ONLY.
5. RIBBING SHALL BE USED TO CONNECT PANELS TO UPRIGHTS AND SHALL BE CONTINUOUS ACROSS BOTH UPRIGHTS. SEE TP4-1B THRU TP4-1E FOR DETAILS.

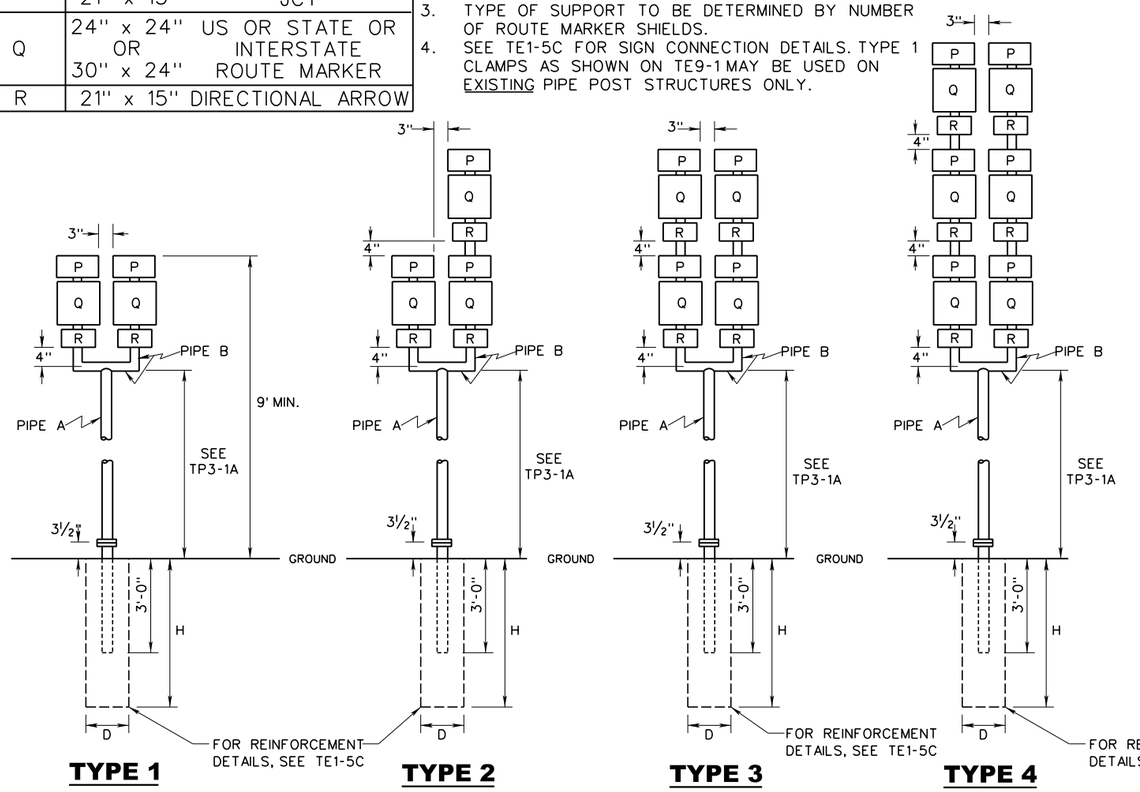

TYPE 1 **TYPE 2** **TYPE 3** **TYPE 4** **TYPE 5**

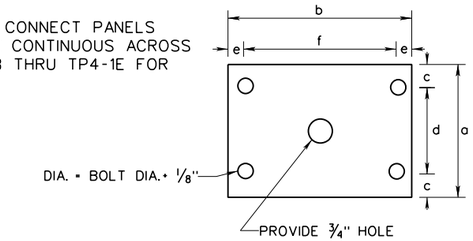

KEEPER PLATE

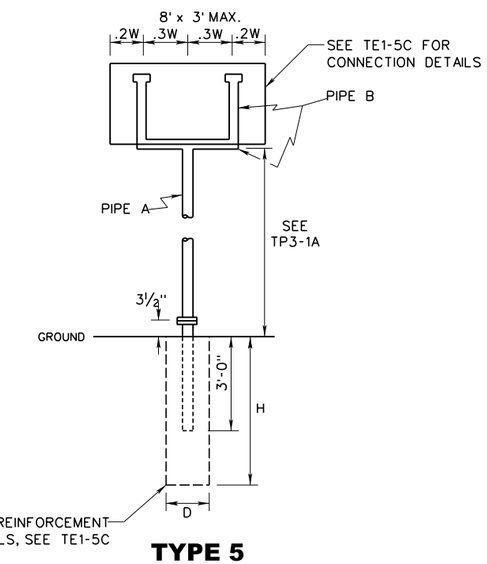

GENERAL NOTES:

ALL ITEMS AND FOUNDATIONS SHOWN ON THIS SHEET SHALL BE IN ACCORDANCE WITH THE WEST VIRGINIA DIVISION OF HIGHWAYS STANDARD SPECIFICATIONS ROADS AND BRIDGES, CURRENT EDITION, AND ALL CURRENT SUPPLEMENTAL SPECIFICATIONS.

THE SUPPORTS SHOWN ON THIS DETAIL ARE ONLY INTENDED FOR USE IN TYPICALLY URBAN AREAS WHERE LIMITED AVAILABLE RIGHT OF WAY OR ROADSIDE FEATURES SUCH AS SIDEWALKS RESTRICT THE ABILITY TO INSTALL MULTIPLE SUPPORTS. THESE TYPE SUPPORTS SHOULD ONLY BE SPECIFIED WITH THE APPROVAL OF THE TRAFFIC ENGINEERING DIVISION.

IF THE SUPPORTS SHOWN ARE TO BE INSTALLED NEAR A ROADWAY WITH THE FRONT AND BACK EDGES OF THE BASE PLATE BEING PARALLEL TO THE ROADWAY INSTEAD OF PERPENDICULAR, ONE OF THE FOLLOWING REQUIREMENTS MUST BE MET:

- THE SUPPORT IS OUTSIDE OF THE CLEAR ZONE OF THE ROADWAY
- THE SUPPORT IS PROTECTED FROM ERRANT VEHICLES BY GUARDRAIL OR CONCRETE BARRIER. THIS IS PROVIDED PROPER CONSIDERATION IS GIVEN TO THE BARRIER LENGTH OF NEED POINT AND THE ANGLE OF DEPARTURE OF THE ERRANT VEHICLE PER DESIGN DIRECTIVE 662 (USE THE ANGLE SPECIFIED FOR NHS PROJECTS). ALSO, SEE SHEET TP3-1C.

THE CONTRACTOR SHALL FURNISH FOUR SHIMS PER POST, TWO .012 IN. THICK AND TWO .032 IN. THICK.

FRICTION CAPS

CAPS MAY BE FABRICATED FROM EITHER HOT ROLLED OR COLD ROLLED STEEL SHEETS. FOR PIPE SIZES 3 IN. AND SMALLER THE MINIMUM SHEET METAL THICKNESS SHALL BE 24 GAUGE.

THE RIM EDGES SHALL BE REASONABLY STRAIGHT AND SMOOTH.

CAPS SHALL BE SIZED AND FORMED IN SUCH A MANNER AS TO PRODUCE A DRIVE-ON FRICTION FIT AND HAVE NO TENDENCY TO ROCK WHEN SEATED ON THE PIPE. THE DEPTH SHALL BE SUFFICIENT TO GIVE POSITIVE PROTECTION AGAINST THE ENTRANCE OF RAINWATER. THEY SHALL BE FREE OF SHARP CREASES OR INDENTATIONS AND SHOW NO EVIDENCE OF METAL FAILURE.

PROCEDURE FOR ASSEMBLY OF BASE CONNECTION

1. ASSEMBLE POST TO STUB WITH BOLTS AND ONE FLAT WASHER ON EACH BOLT BETWEEN PLATES.
2. SHIM AS REQUIRED TO PLUMB POST.
3. BASE PLATE BOLTS ARE TO BE TORQUED USING A "CLICK" TYPE TORQUE WRENCH MEETING THE REQUIREMENTS SPECIFIED IN SECTION 657 OF THE STANDARD SPECIFICATIONS. DO NOT OVERTIGHTEN.

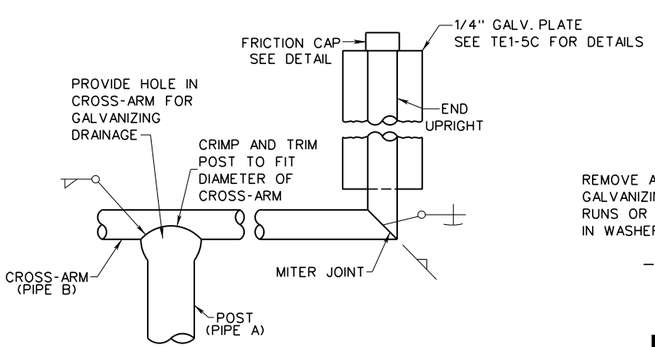

WELDED PIPE MOUNT DETAILS

(SEE TE1-5B WELDING NOTE)

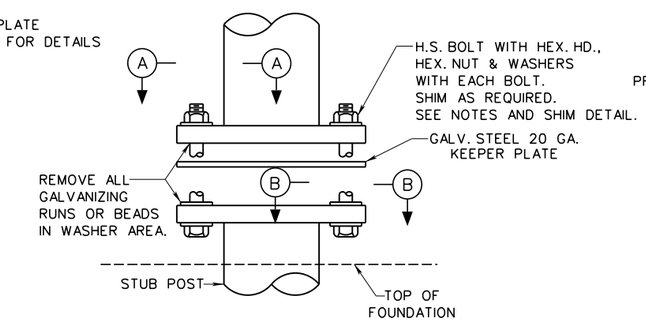

BASE CONNECTION DETAIL

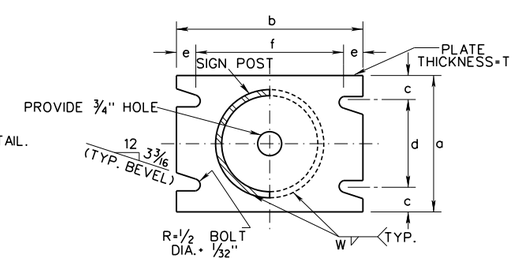

SECTION A-A SECTION B-B

(SEE TABLE FOR DIMENSIONS)

SECTIONS SHOWN ARE FOR INSTALLATIONS ON RIGHT SHOULDER AND IN GORE. PLATE SLOT BEVELS ARE OPPOSITE HAND FROM THAT SHOWN FOR INSTALLATIONS ON LEFT SHOULDER.

PIPE AND FOUNDATION SCHEDULE						
TYPE OF MOUNT	PIPE A		PIPE B		FOOTING	
	DIA.	SCH.	DIA.	SCH.	D	H
1	3"	40	1½"	40	2'-0"	4'-6"
2	4"	40	3"	40	2'-2"	5'-0"
3	6"	40	3"	40	2'-4"	6'-0"
4	6"	40	3"	80	2'-4"	6'-0"
5	4"	40	2"	40	2'-2"	5'-0"

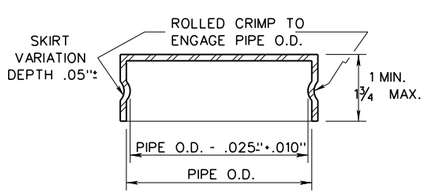

FRICTION CAP DETAIL

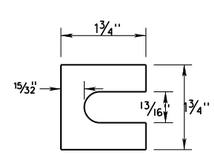

SHIM DETAIL

BASE CONNECTION SCHEDULE									
PIPE A DIA.	BOLT SIZE	a	b	c	d	e	f	T	W
3	½x2½	4½	7	1	2½	¾	5½	¾	5/16
4	½x2¾	5½	7¾	1	3½	¾	6¼	1	⅜
6	⅝x3½	8	10	1¼	5½	1	8	1½	7/16

DIMENSIONS a, b, c, d, e & f ALSO APPLY TO KEEPER PLATE.

UNIT=INCH

WEST VIRGINIA DEPARTMENT OF TRANSPORTATION
DIVISION OF HIGHWAYS
STANDARD DETAIL

PREPARED: 8/2018
REVISION DATE

PIPE POST SIGN SUPPORTS TYPES 1 - 5

STANDARD SHEET TE1-5A

TRAFFIC ENGINEERING DIVISION

12/19/2018

Z:\Projects\WV001\Standard Details vol II\New_Sheets\Signing\TE1-5A.dgn

JD4C02C03-STDBOR cc

MARKER	DESCRIPTION	
P	24"x12" 24"x12" 21"x15"	CARDINAL TO JCT
Q	24"x24" OR 30"x24"	U.S. OR STATE OR INTERSTATE RTE. MARKER
R	21"x15"	DIRECTIONAL ARROW

NOTES:
1. VERTICAL SPACING BETWEEN P & Q AND Q & R PANELS SHALL BE ONE INCH (1").
2. TYPE OF SUPPORT TO BE DETERMINED BY NUMBER OF ROUTE MARKER SHIELDS.

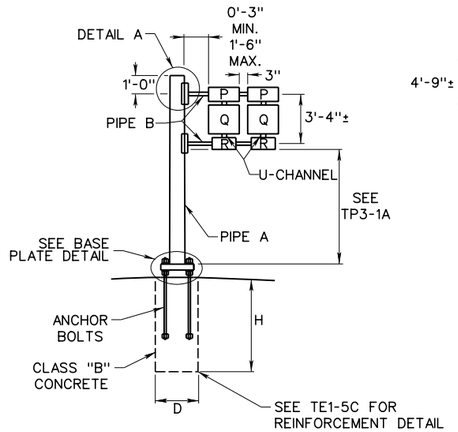

TYPE 6

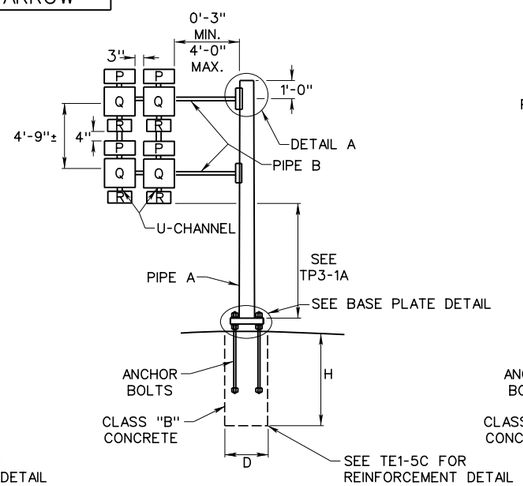

TYPE 7

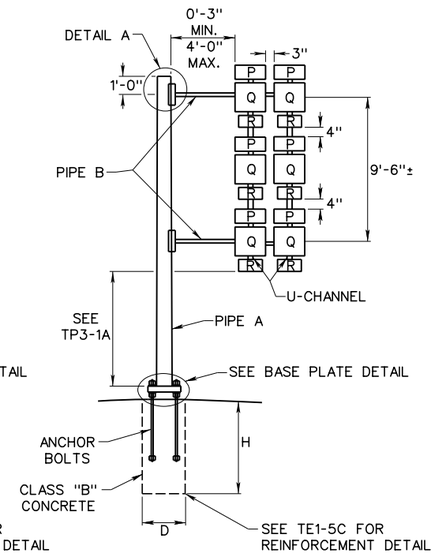

TYPE 8

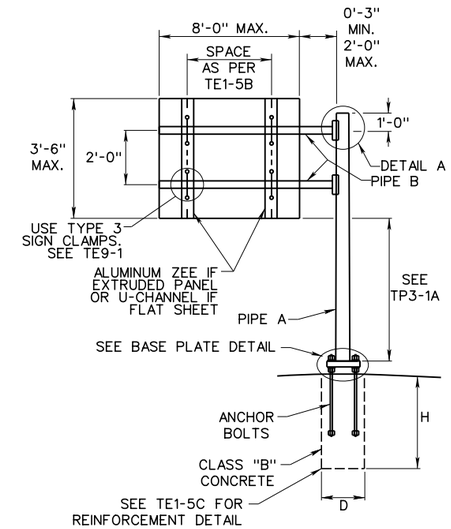

TYPE 9

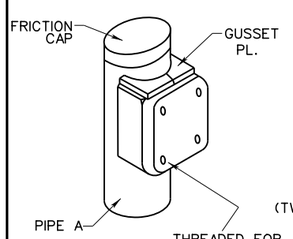

DETAIL A

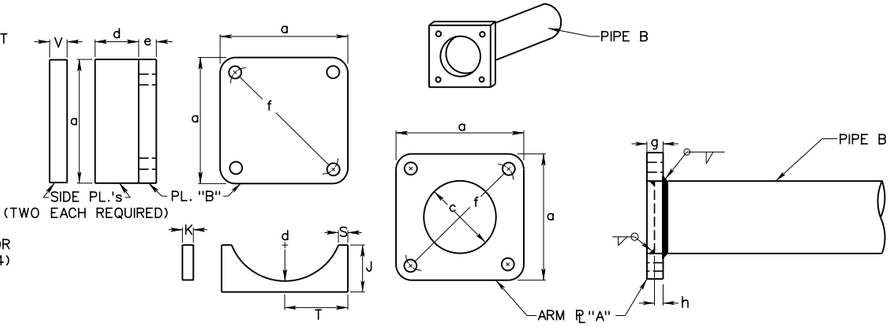

POST-ARM CONNECTION DETAIL

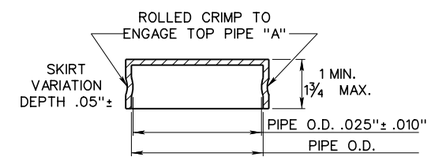

FRICTION CAP DETAIL

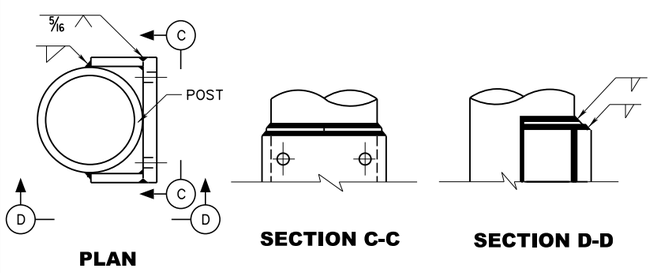

WELDING DETAILS

ARM PLATE (A) SCHEDULE (IN.) ⚠1						
POST TYPE	a	c	g	h	f	ATTACHMENT BOLTS(HEX. HEAD)
6	5½	2	¾	½	4	⅝ x 1¾
7	7½	2 15/16	1	½	6	¾ x 2¼"
8	7½	3 9/16	1	½	6	⅞ x 2¼"
9	6 9/16	2 15/16	1	½	6	¾ x 2¼"

POLE PLATE (B) SCHEDULE (IN.) ⚠1								
POST TYPE	a	d	e	V	GUSSETS			
					J	K	S	T
6	4½	2¼	¾	½	2⅝	½	¼	2½
7	7½	3⅜	1	½	3¾	½	¼	3⅝
8	7½	3⅜	1	½	3¾	½	¼	3⅝
9	6 9/16	2⅞	1	½	3¼	½	¼	3⅛

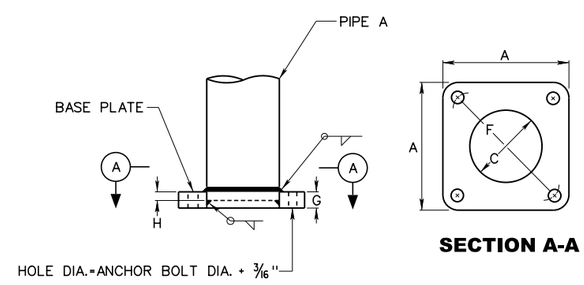

SECTION A-A

BASE PLATE DETAIL

SUPPORT POST AND BASE PLATE SCHEDULE (IN.) ⚠1									
POST TYPE	PIPE A		PIPE B		BASE PLATE				
	DIA.	SCH.	DIA.	SCH.	A	C	F	G	H
6	4	40	1½	40	8	4 9/16	7	1	¾
7	6	40	2½	40	12	6¾	10	1	¾
8	6	80	3	40	12	6¾	10½	1¼	¾
9	5	40	2½	40	12	5⅝	10	1	¾

SEE TE1-5C FOR FOOTING AND ANCHOR BOLT DETAILS

⚠1 REVISED VARIOUS DIMENSIONS.

GENERAL NOTES:

ALL ITEMS AND FOUNDATIONS SHOWN ON THIS DETAIL SHALL BE IN ACCORDANCE WITH SECTION 657 OF THE WEST VIRGINIA DIVISION OF HIGHWAYS STANDARD SPECIFICATIONS ROADS AND BRIDGES, CURRENT EDITION, AND ALL CURRENT SUPPLEMENTAL SPECIFICATIONS.

THE SUPPORTS SHOWN ON THIS DETAIL ARE ONLY INTENDED FOR USE IN TYPICALLY URBAN AREAS WHERE LIMITED AVAILABLE RIGHT OF WAY OR ROADSIDE FEATURES SUCH AS SIDEWALKS RESTRICT THE ABILITY TO INSTALL MULTIPLE SUPPORTS. THESE TYPE SUPPORTS SHOULD ONLY BE SPECIFIED WITH THE APPROVAL OF THE TRAFFIC ENGINEERING DIVISION.

THESE TYPE SUPPORTS SHOULD NOT BE INSTALLED WITHIN THE CLEAR ZONE OF ANY ROADWAY UNLESS THE SUPPORT IS PROTECTED FROM ERRANT VEHICLES BY GUARDRAIL OR CONCRETE BARRIER . THIS IS PROVIDED PROPER CONSIDERATIONIS GIVEN TO THE BARRIER LENGTH OF NEED POINT AND THE ANGLE OF DEPARTURE OF THE ERRANT VEHICLE PER DESIGN DIRECTIVE 662 (USE THE ANGLE SPECIFIED FOR NHS PROJECTS). ALSO, SEE SHEET TP3-1C.

CONNECT ALL SIGN PANELS TO HORIZONTAL PIPE MEMBERS USING ALUMINUM ZEE AND TYPE 3 CLAMPS AS SHOWN ON TE9-1.

WELDING:

ALL WELDING SHALL BE DONE IN ACCORDANCE WITH THE WELDING SPECIFICATIONS OF SECTION 658, OVERHEAD SIGN STRUCTURES. ALL WELDS SHALL DEVELOP 100% STRENGTH OF THE MATERIAL BEING JOINED.

FRICTION CAPS:

CAP MAY BE FABRICATED FROM EITHER HOT ROLLED OR COLD ROLLED STEEL SHEETS. FOR PIPE SIZES 3 IN. AND SMALLER THE MINIMUM SHEET METAL THICKNESS SHALL BE 24 GUAGE.

THE RIM EDGES SHALL BE REASONABLY STRAIGHT AND SMOOTH.

CAPS SHALL BE SIZED AND FORMED IN SUCH A MANNER AS TO PRODUCE A DRIVE-ON FRICTION FIT AND HAVE NO TENDENCY TO ROCK WHEN SEATED ON THE PIPE. THE DEPTH SHALL BE SUFFICIENT TO GIVE POSITIVE PROTECTION AGAINST THE ENTRANCE OF RAINWATER. THEY SHALL BE FREE OF SHARP CREASES OR INDENTATIONS AND SHOW NO EVIDENCE OF METAL FAILURE.

ASSEMBLY OF BASE PLATE AND ARMS

1. PLACE AND LEVEL THE ANCHOR BOLT LEVELING NUTS AND WASHERS;
2. INSTALL UPRIGHT SUPPORT WITH BASE PLATE ON TOP OF THE LEVELING NUTS;
3. ENSURE BASE PLATE IS LEVEL AND ALL LEVELING NUTS ARE IN CONTACT WITH THE BOTTOM OF THE BASE PLATE;
4. INSTALL TOP NUTS AND WASHERS;
5. PRE-TIGHTEN THE BOLTS IN A MANNER CONSISTENT WITH THE SNUG TIGHTENING PROCEDURES DESCRIBED IN THE RESEARCH COUNCIL ON STRUCTURAL CONNECTIONS (RCSC) SPECIFICATION FOR STRUCTURAL JOINTS USING HIGH-STRENGTH BOLTS;
6. FULLY TIGHTEN THE BOLTS BY ROTATING THE NUTS IN ACCORDANCE WITH THE STANDARD SPECIFICATIONS;
7. ASSEMBLE EACH ARM CONNECTION AND SNUG TIGHTEN THE BOLTS IN ACCORDANCE WITH STEP 5 BY TURNING THE BOLT HEAD;
8. FULLY TIGHTEN EACH BOLT IN ACCORDANCE WITH STEP 6 BY TURNING THE BOLT HEAD.

WEST VIRGINIA DEPARTMENT OF TRANSPORTATION
DIVISION OF HIGHWAYS
STANDARD DETAIL

PREPARED: 8/2018
REVISION DATE
⚠1 8/15/2023

PIPE POST SIGN SUPPORTS TYPES 6 - 9

STANDARD SHEET TE1-5B

TRAFFIC ENGINEERING DIVISION

J04C02C03-STDBDR c

8/17/2023 Z:\Projects\WVDOT\Standard Details, vol II\Final Submittal\Revised DGNs\Revised 8-2023\TE1-5B Rev 8-15-2023.dgn

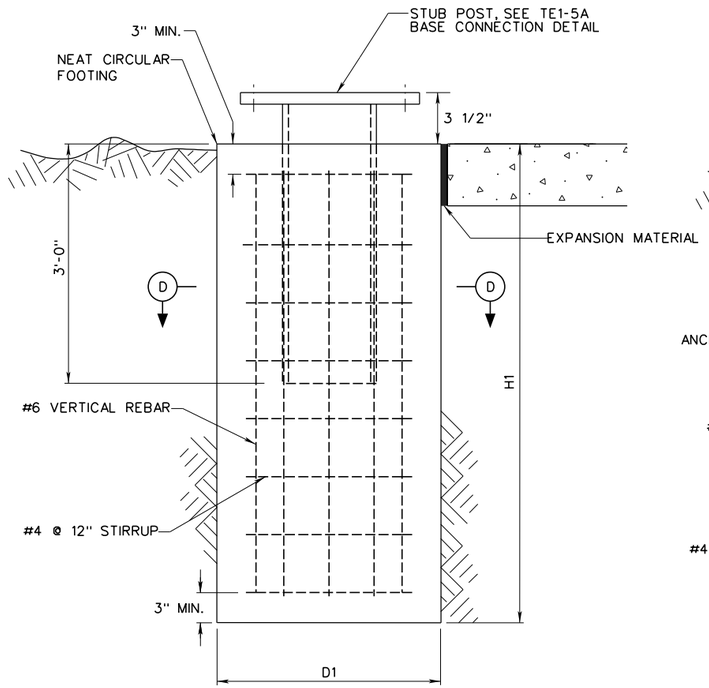

ELEVATION

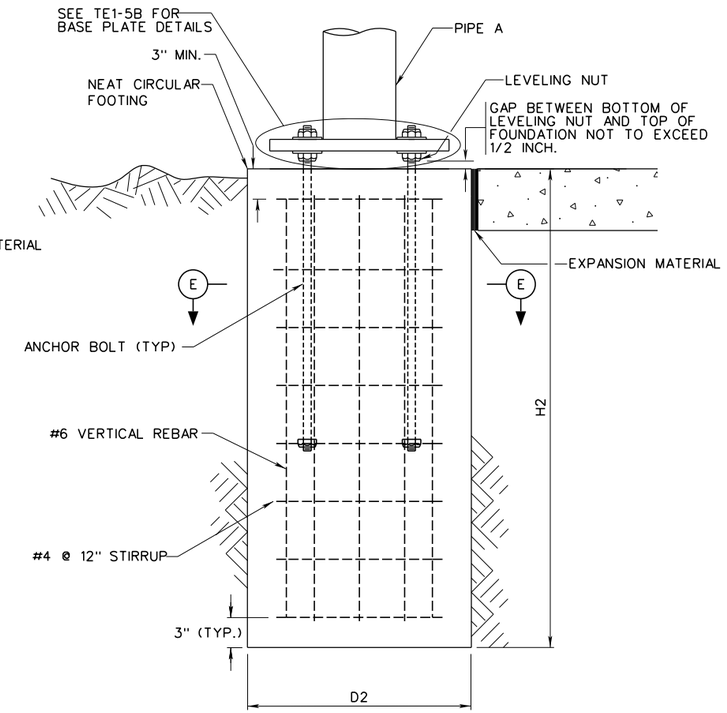

ELEVATION

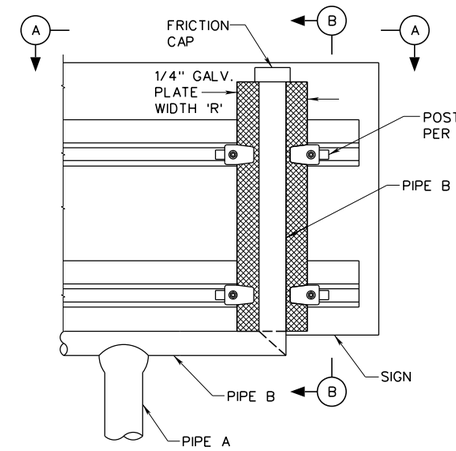

ELEVATION

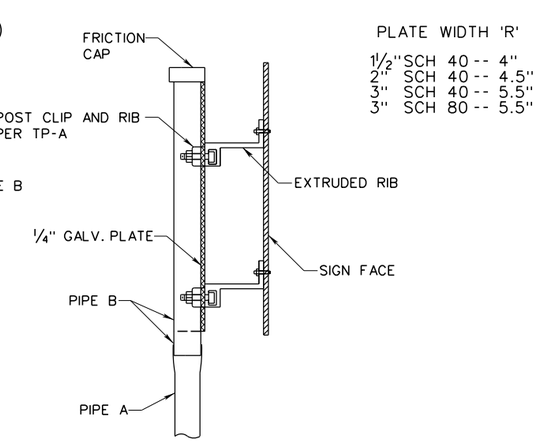

SECTION B-B

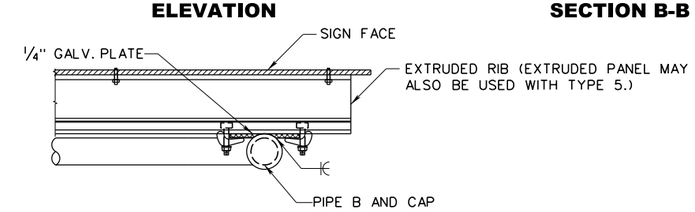

SECTION A-A

SIGN CONNECTION & RIB ASSEMBLY

(TYPE 5 SHOWN, TYPES 1-4 SIMILAR)

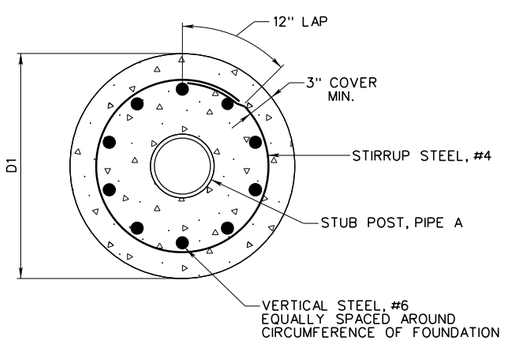

SECTION D-D

FOOTING DETAIL

(TYPES 1-5)

FOOTING SCHEDULE (IN.)				
POST TYPE	STUB POST (PIPE A)		FOOTING	
	DIA.	SCH.	D1	H1
1	3	40	2'-0"	4'-6"
2	4	40	2'-2"	5'-0"
3	6	40	2'-4"	6'-0"
4	6	40	2'-4"	6'-0"
5	4	40	2'-2"	5'-0"

SEE TE1-5A FOR BASE CONNECTION DETAILS

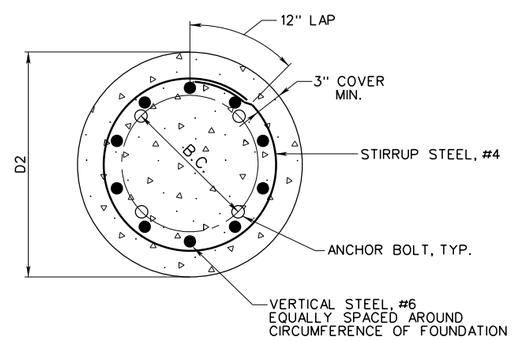

SECTION E-E

FOOTING DETAIL

(TYPES 6-9)

FOOTING SCHEDULE (IN.)						
POST TYPE	FOOTING		ANCHOR BOLT			
	D2	H2	DIA.	L	U	B.C.
6	2'-2"	5'-0"	3/4	36	5	7
7	2'-4"	6'-0"	1	48	6	10
8	2'-4"	6'-6"	1 1/4	54	8	10
9	2'-2"	5'-6"	1	48	6	10

SEE TE1-5B FOR BASE PLATE DETAILS

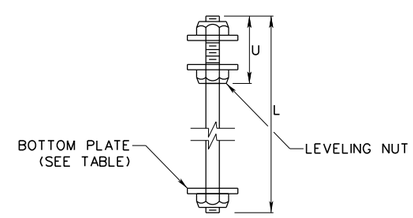

TYPICAL ANCHOR BOLT

BOTTOM PLATE SCHEDULE (IN.)			
BOLT DIA.	SQ. DIM.	THICK.	HOLE DIA.
3/4	3 1/2	3/4	13/16
1	3 1/2	3/4	1 1/16
1 1/4	3 1/2	3/4	1 3/8

FOUNDATION NOTES:

DEPTH OF FOUNDATION IS BASED ON AN ASSUMED SOIL SUCH AS MEDIUM CLAY OR SAND CLAY PROVIDING AN UNCONFINED COMPRESSIVE STRENGTH NOT LESS THAN 2500 LBS/FT². THESE FOUNDATIONS MAY BE USED IN COHESIONLESS TYPE SOILS PROVIDING THAT THE FRICTION ANGLE IS NOT LESS THAN 30 DEGREE. A GEOTECHNICAL ENGINEER SHALL BE CONSULTED AND THE DEPTH SHALL BE SUBJECTED TO BE CHANGED TO ADAPT TO LOCAL SOIL CONDITION.

THE TOPS OF ALL FOUNDATIONS SHALL BE FINISHED SMOOTH WITH THE CONCRETE SLOPING SLIGHTLY DOWNWARD FROM THE STUB OR ANCHOR BOLTS TO THE EDGE OF THE FOOTER IN ORDER TO FACILITATE DRAINAGE.

IF THE SLOPE IS 4:1 OR GREATER AND IT IS NOT POSSIBLE TO BUILD UP THE DOWNHILL SIDE OF THE GROUND SLOPE IN ORDER TO ALLOW THE TOP OF THE FOUNDATION TO BE LEVEL, A SONOTUBE SHALL BE INCORPORATED.

NOTES:

1. FOR WELDING NOTES, SEE SHEET TE1-5B.
2. FOR STUB POST AND BASE CONNECTION DETAILS FOR TYPES 1-5 SEE TE1-5A.
3. FOR BASE PLATE DIMENSIONS FOR TYPE 6-9 SEE TE1-5B.

WEST VIRGINIA DEPARTMENT OF TRANSPORTATION
DIVISION OF HIGHWAYS
STANDARD DETAIL

PREPARED: 8/2018
REVISION DATE

PIPE POST
SIGN SUPPORTS
MISC. DETAILS

STANDARD SHEET TE1-5C

TRAFFIC ENGINEERING DIVISION

12/9/2018

Z:\Projects\WVDOT\Standard Details vol II\New_Sheets\Signing\TE1-5C.dgn

J04C02C03-STDBOR c

SUPPORT SIZE SELECTION CHART

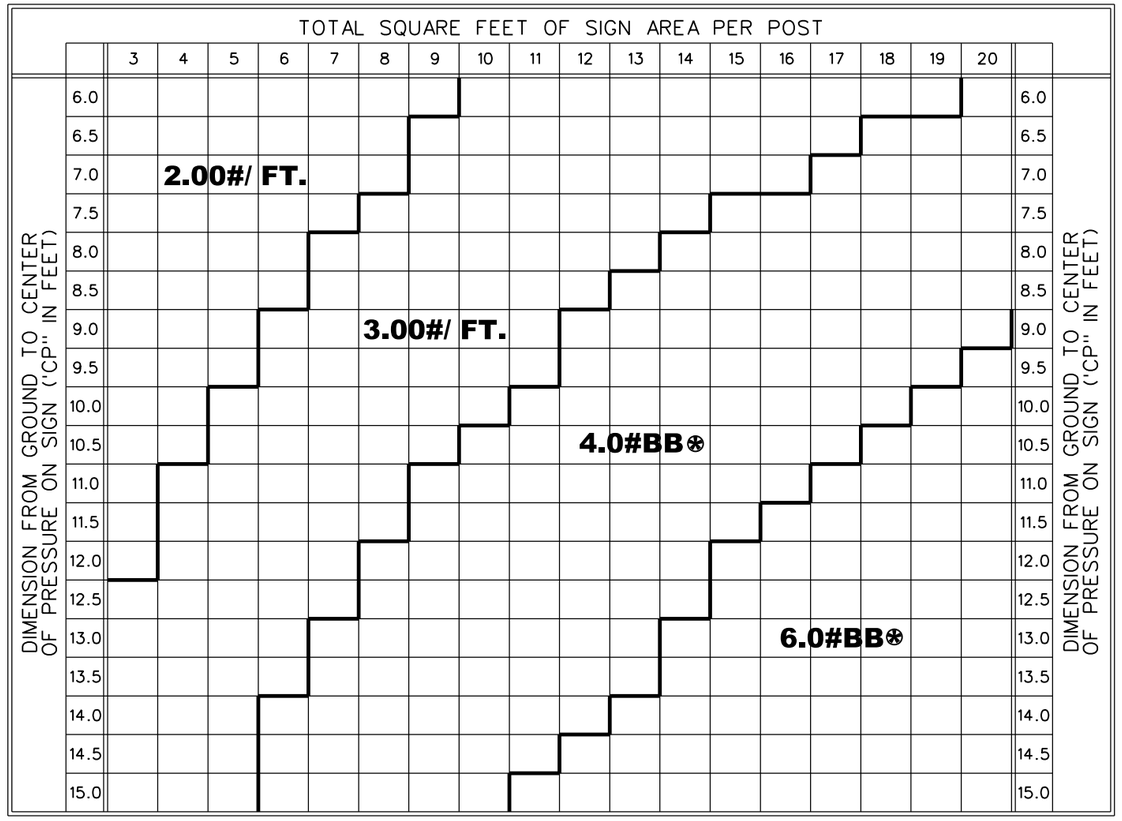

⊛CAN BE USED IF THE SUPPORTS ARE LOCATED BEHIND THE GUARDRAIL, ON A BENCH OR WITH BREAKAWAY BASES.

NOTES:

1. ALL ITEMS SHOWN ON THIS DETAIL SHEET AND TE1-7B SHALL BE IN ACCORDANCE WITH SECTION 657 OF THE WEST VIRGINIA DIVISION OF HIGHWAYS STANDARD SPECIFICATIONS ROADS AND BRIDGES, CURRENT EDITION, AND ALL CURRENT SUPPLEMENTAL SPECIFICATIONS.

2. DEPTHS DRIVEN ARE BASED ON AVERAGE SOIL CONDITIONS. DEPENDING UPON ACTUAL SOIL BEARING IN THE FIELD, HE ENGINEER MAY REQUIRE THAT THE DEPTH DRIVEN BE INCREASED TO 5 FEET.

3. SEE TE1-3B FOR POST SPACING.

4. STITCH BOLT SPACING FOR BACK-TO-BACK POSTS SHALL BE 18 INCHES FOR THE PORTIONS OF THE POSTS ABOVE GROUND LEVEL AND SHALL BE 4 INCHES FOR THE PORTIONS OF THE POSTS BELOW GROUND LEVEL.

MIN/MAX NUMBER OF SUPPORTS

THE FOLLOWING GUIDELINES SHOULD BE FOLLOWED WHEN SELECTING U-CHANNEL SUPPORTS:

A. SIGNS GREATER THAN 36 IN. IN WIDTH SHOULD BE INSTALLED ON A MINIMUM OF TWO (2) SUPPORTS. EXCEPTIONS TO THIS ARE 36 IN. DIAMONDS, W14-3 SIGNS, AND D16-1 SIGNS 42-48 IN. WIDE AND 9-15 IN. TALL.
B. A MAXIMUM OF TWO (2) SUPPORTS SHOULD BE USED FOR ALL SIGNS 60 IN. WIDE OR LESS, 60 IN. DIAMONDS INCLUDED.
C. IF NON BB SUPPORTS ARE USED, A MIN. OF THREE (3) SUPPORTS SHOULD BE USED FOR ALL SIGNS GREATER THAN 72 IN. WIDE.
C. A MAXIMUM OF THREE (3) NON BB SUPPORTS OR TWO (2) BB SUPPORTS SHOULD BE USED FOR ANY ASSEMBLY. IF THIS IS NOT ADEQUATE BASED ON THE SIGN SELECTION CHART, STEEL BEAM SUPPORTS SHOULD BE CONSIDERED.

SUPPORT TYPE SELECTION GUIDELINES

THE SUPPORTS SELECTED FOR AN ASSEMBLY SHALL BE WITHIN THE LIMITS OF THE SUPPORT SIZE SELECTION CHART IN ALL CASES. NON BB SUPPORTS SHOULD NOT BE SPECIFIED FOR USE WITH THE FOLLOWING:

A. EXTRUDED PANEL SIGNS (EXCEPTION FOR TYPE K PARAPET MOUNTS).
B. ASSEMBLIES WHICH WOULD VIOLATE THE MIN/MAX NUMBER OF SUPPORTS GUIDELINES.

BEFORE STEEL BEAM SUPPORTS ARE CONSIDERED, BB SUPPORTS SHOULD BE CONSIDERED FOR USE WITH ASSEMBLIES OF THE TYPES DESCRIBED ABOVE. HOWEVER, THE FOLLOWING GUIDELINES SHOULD BE FOLLOWED:

A. IF THE ASSEMBLY IS MADE UP OF INTERSTATE OR EXPRESSWAY SIZED STANDARD MESSAGE FLAT SHEET SIGNS, OR INCLUDES AN EXTRUDED PANEL SIGN, BB SUPPORTS SHOULD ONLY BE CONSIDERED IF THE ASSEMBLY WILL BE PLACED OUTSIDE OF THE CLEAR ZONE OF ALL NEARBY ROADWAYS OR IF THE SUPPORTS ARE PROTECTED FROM ERRANT VEHICLES BY GUARDRAIL OR CONCRETE BARRIER. THIS IS PROVIDED PROPER CONSIDERATION IS GIVEN TO THE BARRIER LENGTH OF NEED POINT AND THE ANGLE OF DEPARTURE OF THE ERRANT VEHICLE PER DESIGN DIRECTIVE 662 (USE THE ANGLE SPECIFIED FOR NHS PROJECTS). ALSO, SEE SHEET TP3-1C.
B. IF THE ASSEMBLY IS MADE UP ENTIRELY OF NON-INTERSTATE/NON-EXPRESSWAY SIZED STANDARD MESSAGE FLAT SHEET SIGNS, BB SUPPORTS SHOULD BE CONSIDERED. HOWEVER, IF THE CLEAR ZONE AND/OR PROTECTION REQUIREMENTS IN THE PREVIOUS PARAGRAPH ARE NOT MET, AN APPROVED BB U-CHANNEL BREAKAWAY DEVICE SHALL BE REQUIRED.

POST SELECTION PROCEDURE:

1. DETERMINE TOTAL SIGN AREA OF PANEL(S).
2. DETERMINE HEIGHT FROM THE GROUND USING THE LONGEST POST TO THE CENTER OF PRESSURE (CP) OF THE SIGN(S). SEE SHEET TE1-3B FOR EXAMPLES OF HOW TO DETERMINE THE CP VALUE.
3. USING THE MIN/MAX NUMBER OF SUPPORTS GUIDELINES FOR GUIDANCE DETERMINE PRELIMINARY SELECTION OF THE NUMBER OF SUPPORTS TO BE USED.
4. CALCULATE THE SQUARE FOOTAGE OF SIGN PER SUPPORT (TOTAL SQUARE FOOTAGE DIVIDED BY THE NUMBER OF SUPPORTS).
5. USE THE TABLE TO DETERMINE POST SIZE.

POST CHART

POST SECTION	MIN. DEPTH DRIVEN
2.00 #/FT.	3.0'
3.00 #/FT.	3.5'
4.00 #BB/FT.	3.5'
6.00 #BB/FT.	3.5'

WEST VIRGINIA DEPARTMENT OF TRANSPORTATION
DIVISION OF HIGHWAYS
STANDARD DETAIL

PREPARED: 8/2018
REVISION DATE

ROADSIDE SIGN SUPPORTS U-CHANNEL

STANDARD SHEET TE1-7A

TRAFFIC ENGINEERING DIVISION

12/19/2018

Z:\Projects\WVDOT\Standard Details vol II\New_Sheets\Signing\TE1-7A.dgn

J04C02C03-STDBDR c

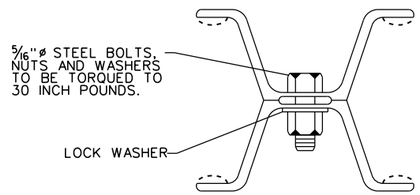

SECTION A-A

STITCH BOLT INSTALLATION

STITCH BOLT SPACING SHALL BE IN ACCORDANCE WITH THE FOLLOWING:

GROUND LEVEL TO TOP OF SUPPORT: EIGHTEEN (18) IN. C-C.

GROUND LEVEL TO BOTTOM OF SUPPORT: FOUR (4) IN. C-C.

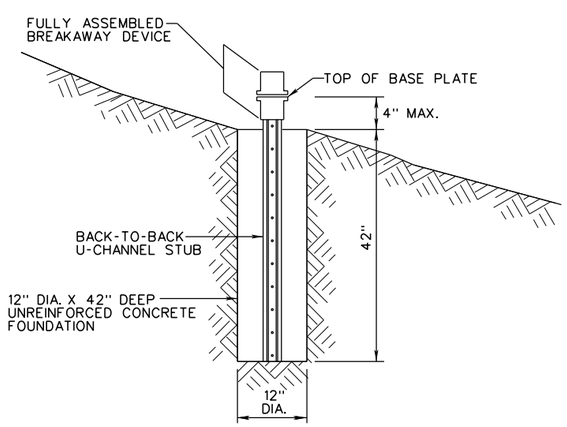

WITH BREAKAWAY DEVICE

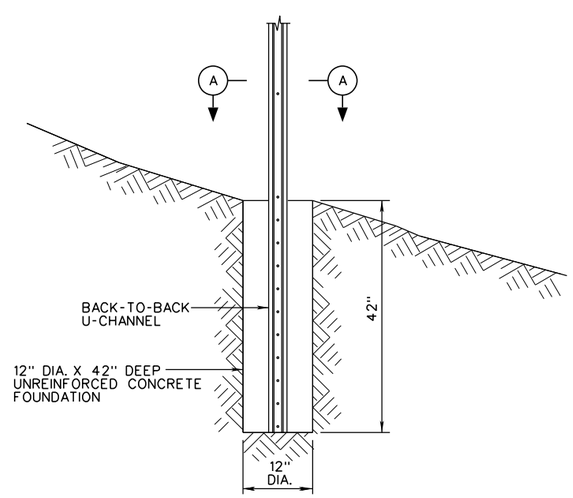

NO BREAKAWAY DEVICE

CONCRETE FOUNDATION FOR BACK-TO-BACK U-CHANNEL

SUPPORT SPACING AND BREAKAWAY DEVICE GUIDELINES

1. PROVIDED THAT ONE OF THE FOLLOWING REQUIREMENTS ARE MET IN REGARDS TO ALL NEARBY ROADWAYS, SPECIAL CONSIDERATION IS NOT REQUIRED IN REGARDS TO POST SPACING AND THE USE OF AN APPROVED BREAKAWAY DEVICE:

   - THE SUPPORTS ARE OUTSIDE OF THE CLEAR ZONE OF THE ROADWAY
   - THE SUPPORTS ARE PROTECTED FROM ERRANT VEHICLES BY A NON-MOUNTABLE BARRIER CURB, GUARDRAIL, OR CONCRETE BARRIER . THIS IS PROVIDED PROPER CONSIDERATIONIS GIVEN TO THE BARRIER LENGTH OF NEED POINT AND THE ANGLE OF DEPARTURE OF THE ERRANT VEHICLE PER DESIGN DIRECTIVE 662 (USE THE ANGLE SPECIFIED FOR NHS PROJECTS). ALSO, SEE SHEET TP3-1C.

   OTHERWISE, THE FOLLOWING GUIDELINES REGARDING SUPPORT SPACING AND THE USE OF APPROVED BREAKAWAY DEVICES SHALL BE FOLLOWED:

   - SINGLE 2" OR 3" SUPPORT AND ROADWAY SPEED LIMIT 60 MPH OR GREATER: USE AN APPROVED BREAKAWAY SPLICE DEVICE.
   - TWO 2" OR 3" SUPPORTS: NO POST SPACING OR BREAKAWAY DEVICE REQUIREMENTS
   - THREE OR MORE 2" OR 3" SUPPORTS: IF THE SUPPORT SPACING IS SUCH THAT THREE (3) SUPPORTS WILL BE PLACED WITHIN A SEVEN (7) FOOT WIDE PATH, USE AN APPROVED BREAKAWAY SPLICE DEVICE. NO MORE THAN THREE (3) NON BB SUPPORTS SHOULD BE USED FOR ANY ASSEMBLY.
   - 4" BB AND 6" BB SUPPORTS: AN APPROVED BREAKAWAY DEVICE SHALL BE USED. NO MORE THAN TWO (2) BB SUPPORTS SHOULD BE USED FOR ANY ASSEMBLY.

2. BREAKAWAY DEVICES SHAL BE INSTALLED IN ACCORDANCE WITH THE MANUFACTURER'S RECOMMENDATIONS. IF SPECIFIC TORQUE VALUES ARE SPECIFIED FOR FASTENERS OF THE DEVICE, THEY SHALL BE TORQUED USING A "CLICK" TYPE TORQUE WRENCH MEETING THE REQUIREMENTS SPECIFIED IN SECTION 657 OF THE STANDARD SPECIFICATIONS

CONCRETE OR ASPHALT SURFACE MOUNTED SUPPORTS

1. IF U-CHANNEL SUPPORTS ARE SPECIFIED FOR ASSEMBLIES THAT WILL BE MOUNTED ON A NON-ELEVATED (RAISED ISLANDS SHALL BE CONSIDERED TO BE NON-ELEVATED) CONCRETE OR ASPHALT SURFACE, THE SUPPORTS ARE TO BE INSTALLED USING AN APPROVED U-CHANNEL OR SQUARE TUBE SURFACE MOUNT BREAKAWAY DEVICE.

   THE PROJECT PLANS WILL SPECIFY THE QTY OF 2" OR 3" U-CHANNEL SUPPORTS TO BE USED. THE SURFACE MOUNT BREAKAWAY DEVICE APL MAY LIST DEVICES APPROVED FOR USE WITH 2.00X14GA SQUARE TUBE SUPPORTS IN ADDITION TO DEVICES APPROVED FOR USE WITH U-CHANNEL. AN APPROVED BREAKAWAY DEVICE WHICH DOES NOT REQUIRE ADJUSTMENT OF THE NORMAL SUPPORT SPACING SHALL BE USED IF AVAILABLE. OTHERWISE, SUPPORT SPACING SHALL BE ADJUSTED WITH THE CONCURRENCE OF THE ENGINEER. IF NO U-CHANNEL COMPATIBLE BREAKAWAY DEVICES ARE AVAILABLE OR IF THE CONTRACTOR OTHERWISE ELECTS TO UTILIZE A BREAKAWAY DEVICE DESIGNED FOR USE WITH SQUARE TUBE, 2.00X14GA SQUARE TUBE MEETING THE REQUIREMENTS OF THE STANDARD SPECIFICATION SHALL BE USED AND THE FOLLOWING SHALL APPLY:

   - NO ADDITIONAL COMPENSATION SHALL BE PAID TO THE CONTRACTOR
   - THE NUMBER OF SQUARE TUBE SUPPORTS SHALL BE EQUIVALENT TO THE NUMBER OF U-CHANNEL SUPPORTS SPECIFIED IN THE PLANS.
   - ALL SIGN CONNECTION HARDWARE SHALL BE AS RECOMMENDED BY THE SQUARE TUBE MANUFACTURER.
   - THE STANDARD SPACING FOR U-CHANNEL SUPPORTS SPECIFIED HEREIN SHALL BE USED UNLESS THE SPACING MUST BE ADJUSTED IN ORDER TO MEET THE BREAKAWAY DEVICE SUPPORT SPACING REQUIREMENTS. IN NO CASE SHALL MORE THAN THREE (3) 2.00-IN X 14 GA. SQUARE TUBE SUPPORTS BE USED WITHIN A SEVEN (7) FOOT WIDTH.
   - THE SQUARE TUBE SHALL BE PAID FOR USING THE 2" OR 3" U-CHANNEL BID ITEM, BASED ON THE SIZE SUPPORTS SPECIFIED IN THE PLANS.

2. BREAKAWAY SPLICE DEVICES SHALL NOT BE COMBINED WITH ANY SURFACE MOUNT BREAKAWAY DEVICE.

3. BREAKAWAY DEVICES SHALL BE INSTALLED IN ACCORDANCE WITH THE MANUFACTURER'S RECOMMENDATIONS. IF SPECIFIC TORQUE VALUES ARE SPECIFIED FOR FASTENERS OF THE DEVICE, THEY SHALL BE TORQUED USING A "CLICK" TYPE TORQUE WRENCH MEETING THE REQUIREMENTS SPECIFIED IN SECTION 657 OF THE STANDARD SPECIFICATIONS.

WEST VIRGINIA DEPARTMENT OF TRANSPORTATION
DIVISION OF HIGHWAYS
STANDARD DETAIL

PREPARED: 8/2018
REVISION DATE

ROADSIDE SIGN SUPPORTS U-CHANNEL

STANDARD SHEET TE1-7B

TRAFFIC ENGINEERING DIVISION

12/19/2018

Z:\Projects\WVDOT\Standard Details vol II\New_Sheets\Signing\TE1-7B.dgn

J04C02C03-STDBOR c

✱ - SIGN SIZE AND SHAPE VARIES
SEE CONTRACT PLANS

ARM SHALL BE MOUNTED TO WALL SO THAT THE 5" X 15" PLATES WELDED TO THE TUBE ARE ON THE BACK SIDE. THE POST FLANGES SHALL BE MOUNTED AGAINST THESE PLATES.

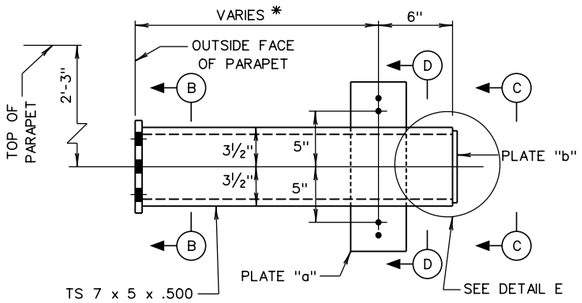

FRONT VIEW

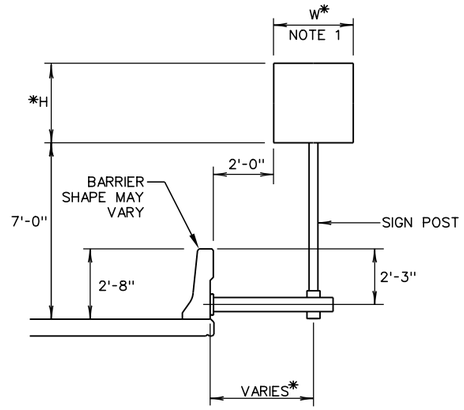

ELEVATION

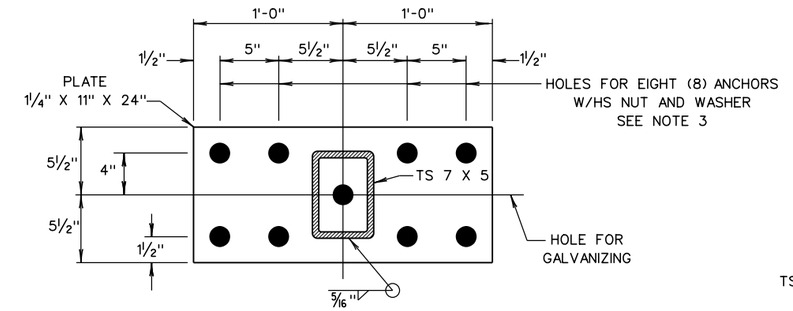

SECTION B-B ⚠1

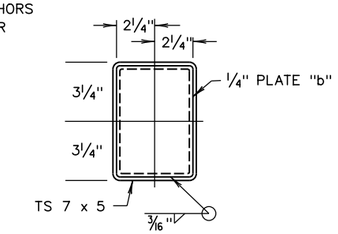

SECTION C-C

TYPE K - ONE SUPPORT

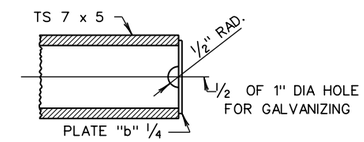

DETAIL E

✱ - SIGN SIZE AND SHAPE VARIES
SEE CONTRACT PLANS

ARM SHALL BE MOUNTED TO WALL SO THAT THE 5" X 15" PLATES WELDED TO THE TUBE ARE ON THE BACK SIDE. THE POST FLANGES SHALL BE MOUNTED AGAINST THESE PLATES.

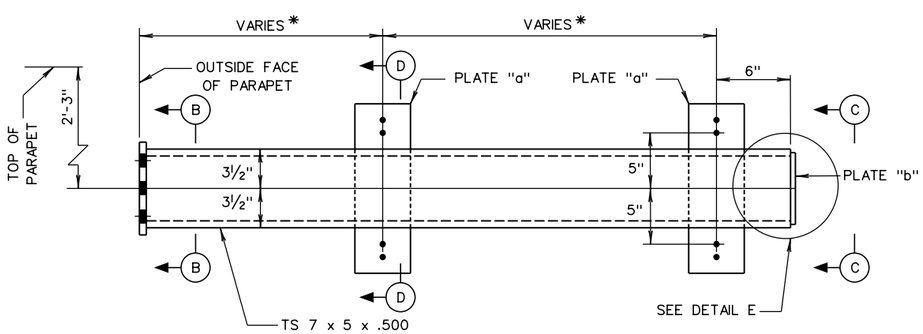

FRONT VIEW

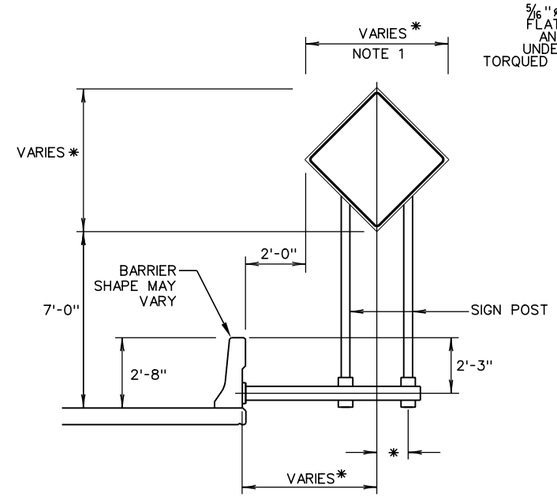

ELEVATION

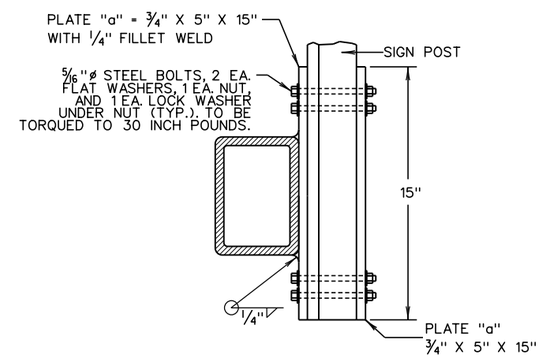

SECTION D-D

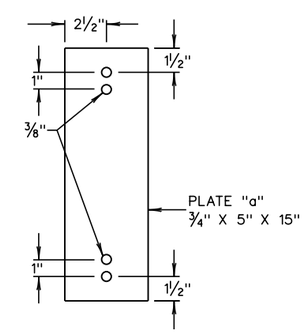

PLATE "a"

TYPE K - TWO SUPPORTS

NOTES:

1. THE FOLLOWING GUIDELINES SHOULD BE FOLLOWED WHEN SELECTING THE NUMBER OF SUPPORTS TO BE USED WITH THE TYPE K BRACKET:

   - SIGNS GREATER THAN 36 IN. WIDE SHOULD BE INSTALLED ON A MINIMUM OF TWO (2) SUPPORTS, 36" DIAMONDS EXCLUDED.

   ⚠1 - TYPE K BRACKET SHALL NOT BE USED FOR ANY SIGN GREATER THAN 6 FT IN WIDTH.

2. ONLY 3# U-CHANNEL SUPPORTS SHALL BE USED WITH TYPE K BRACKETS. REFER TO CHART ON TE1-7A TO CONFIRM 3# U-CHANNEL WILL WORK FOR THE SIGN TO BE INSTALLED.

⚠1 3. ANCHOR SIZE SHALL BE SPECIFIED BY THE MOUNT FABRICATOR ALONG WITH THE ANCHORAGE. EACH ANCHOR SHALL BE DESIGNED FOR A MAXIMUM SERVICE TENSILE LOAD OF 4,000 LBS AND SHEAR SERVICE LOAD OF 2,000 LBS. A FACTOR OF SAFETY OF 4 SHALL BE APPLIED TO THESE LOADS WHEN SELECTING THE ANCHORS. HOLE SIZE SHALL BE 1/16 IN LARGER THAN ANCHOR DIAMETER. THE DESIGNER SHALL VERIFY THAT THE STRUCTURE (BARRIER, BRIDGE DECK, WALL, ETC.) HAS THE CAPACITY TO SUPPORT THE SIGN STRUCTURE LOADING.

4. ALL ITEMS SHOWN ON THIS DETAIL SHEET SHALL BE IN ACCORDANCE WITH SECTION 657 OF THE WEST VIRGINIA DIVISION OF HIGHWAYS STANDARD SPECIFICATIONS, ROADS AND BRIDGES, CURRENT EDITION, AND ALL CURRENT SUPPLEMENTAL SPECIFICATIONS.

FOR SIGNS TWELVE (12) INCHES OR LESS IN ACTUAL WIDTH TO BE INSTALLED ON PARAPETS, THE TYPE A BARRIER WALL SIGN SUPPORT BRACKET DESCRIBED IN SECTION 657 OF THE STANDARD SPECIFICATIONS SHALL BE SPECIFIED IN LIEU OF THE TYPE K OR L BRIDGE OR RETAINING WALL SIGN MOUNTING BRACKETS. THIS IS PROVIDED THE ALLOWABLE LOADING ON THE TYPE A BARRIER WALL SIGN SUPPORT BRACKET WILL NOT BE EXCEEDED. THE TYPE A BARRIER WALL SIGN SUPPORT BRACKET IS REQUIRED TO WITHSTAND LOADING WHICH MEETS OR EXCEEDS THAT WHICH WILL BE GENERATED BASED ON THE LIMITS PROVIDED FOR THE THREE (3) LB PER FOOT U-CHANNEL SUPPORT ON THE SUPPORT SIZE SELECTION CHART ON SHEET TE1-7A. IF THE TYPE A BRACKET IS SPECIFIED, THE "SQUARE TUBE SUPPORT," 2.00X14GA" BID ITEM SHALL BE SPECIFIED AND USED FOR PAYMENT OF THE SUPPORT.

⚠1 REVISED NOTE 2 TO REMOVE REFERENCE TO 3-POST SUPPORT AND LIMIT SIGN WIDTH TO 6'.
REVISED NOTE 3 TO CLARIFY LOADS.
REVISED BASE PLATE DIMENSIONS TO INCREASE BOLT QUANTITY TO 8.

WEST VIRGINIA DEPARTMENT OF TRANSPORTATION
DIVISION OF HIGHWAYS
STANDARD DETAIL

PREPARED: 8/2018
REVISION DATE
PREPARED: 8/2018
⚠1 11/11/2022

BRIDGE OR RETAINING WALL SIGN MOUNTING

TYPE K
1 & 2 SUPPORTS

STANDARD SHEET TE2-1A

TRAFFIC ENGINEERING DIVISION

8/17/2023 Z:\Projects\WVDOT\Standard Details vol I\Final Submittal\Revised DGNs\Revised 4-2022\TE2-1A Rev 11-11-2022.dgn

J04C02C03-STDBOR c

ARM SHALL BE MOUNTED TO WALL SO THAT THE 5" X 18" PLATES WELDED TO THE TUBE ARE ON THE BACK SIDE. THE POST FLANGES SHALL BE MOUNTED AGAINST THESE PLATES.

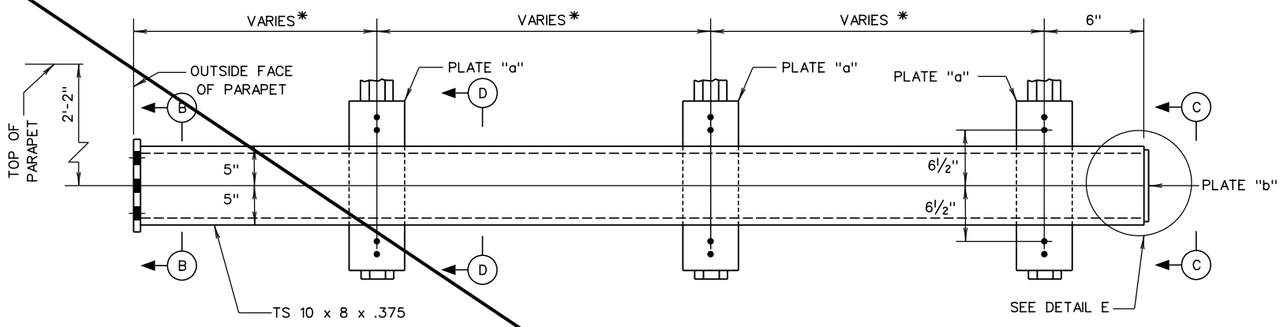

FRONT VIEW

* - SIGN SIZE AND SHAPE VARIES SEE CONTRACT PLANS

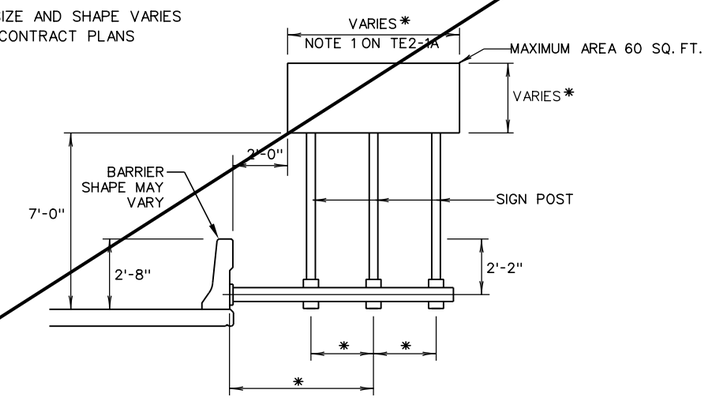

ELEVATION

TYPE K - THREE SUPPORTS

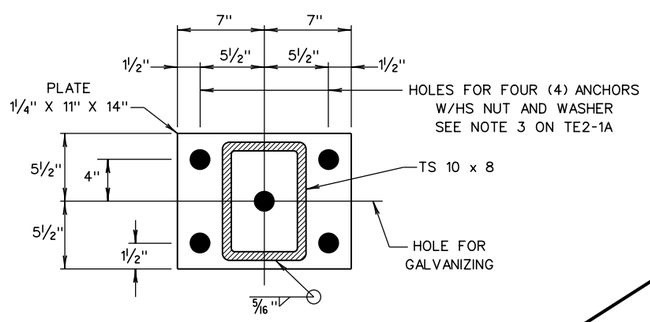

SECTION B-B

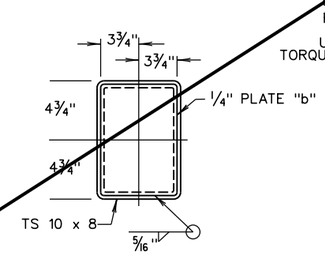

SECTION C-C

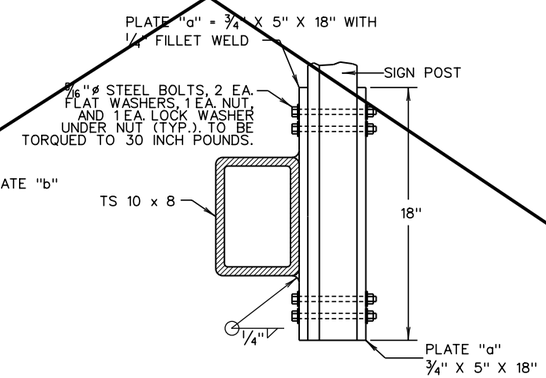

SECTION D-D

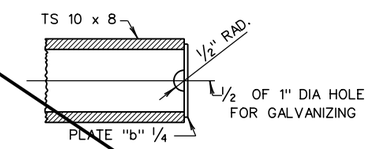

DETAIL E

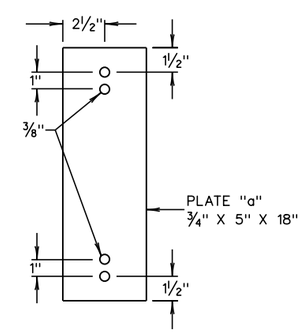

PLATE "a"

NOTE:
SEE NOTES ON TE2-1A.

⚠ SHEET OBSOLETE. DO NOT USE.

WEST VIRGINIA DEPARTMENT OF TRANSPORTATION
DIVISION OF HIGHWAYS
STANDARD DETAIL

PREPARED: 8/2018

REVISION DATE
⚠ 11/11/2022

BRIDGE OR RETAINING WALL SIGN MOUNTING

TYPE K 3 SUPPORTS

STANDARD SHEET TE2-1B

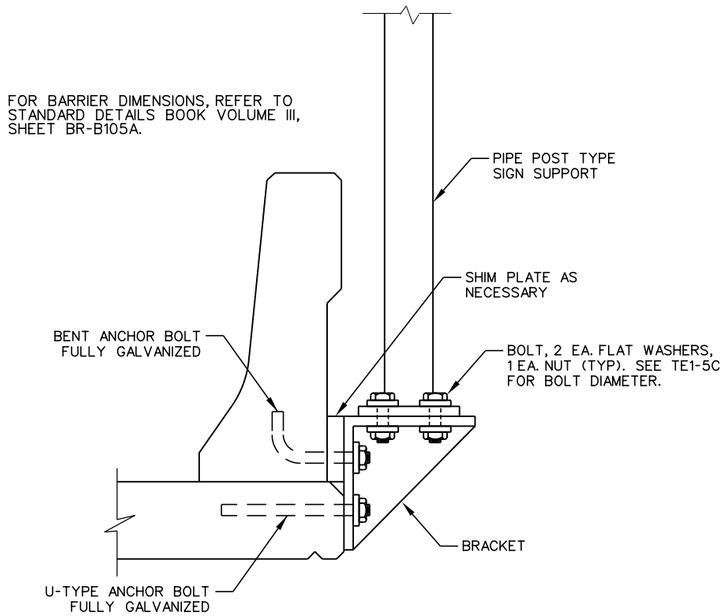

TYPE L - PIPE POST MOUNT
NEW CONSTRUCTION

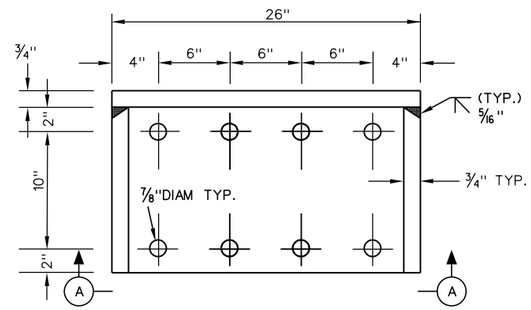

BRACKET FRONT VIEW ⚠1

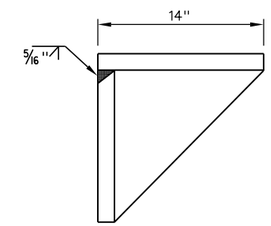

BRACKET SIDE VIEW

NOTES:

1. MATERIAL USED TO FABRICATE THE BRACKET, GALVANIZING, ANCHOR BOLTS, AND SUPPORT TO BRACKET CONNECTION BOLTS SHALL MEET THE REQUIREMENTS CONTAINED IN THE SPECIFICATIONS.

2. ANY AND ALL MATERIALS, EQUIPMENT, LABOR, INCIDENTALS, ETC. NECESSARY TO COMPLETE THE INSTALLATION SHALL BE BID AS ITEM 657050-001, BIRDGE OR RETAINING WALL BRACKET, TYPE L.

⚠1 3. TYPE L BRACKET FOR USE WITH PIPE POST TYPES 6 & 9 ONLY. SEE STANDARD SHEET TE1-5B AND TE1-5C FOR PIPE POST DETAILS.

⚠1 4. EACH ANCHOR SHALL BE DESIGNED FOR A MAXIMUM SERVICE TENSILE LOAD OF 4,200 LBS AND SHEAR SERVICE LOAD OF 1,600 LBS. A FACTOR OF SAFETY OF 4 SHALL BE APPLIED TO THESE LOADS WHEN SELECTING THE ANCHORS. THE DESIGNER SHALL VERIFY THAT THE STRUCTURE (BARRIER, BRIDGE DECK, WALL, ETC.) HAS ADEQUATE CAPACITY TO SUPPORT THE SIGN STRUCTURE LOADING.

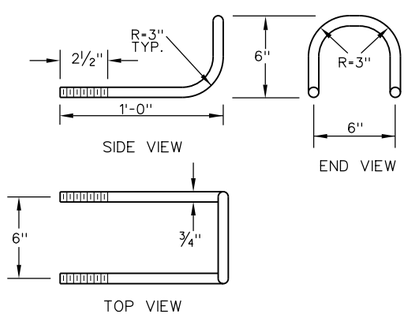

BENT ANCHOR BOLT
2 REQUIRED ⚠1

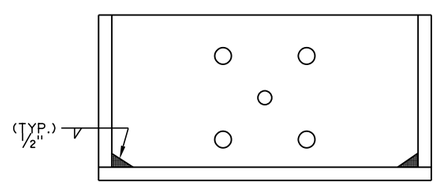

SECTION A-A ⚠1

F = 7" FOR PIPE POST SIGN SUPPORT TYPE 6;
10" FOR PIPE POST SIGN SUPPORT TYPE 9.

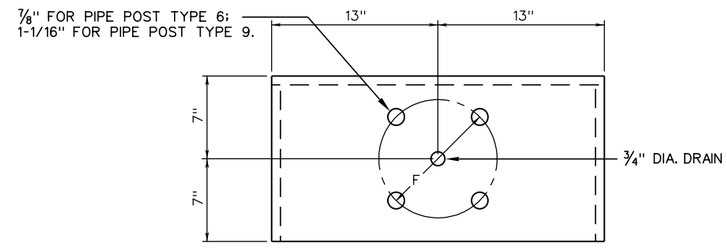

BRACKET TOP VIEW ⚠1

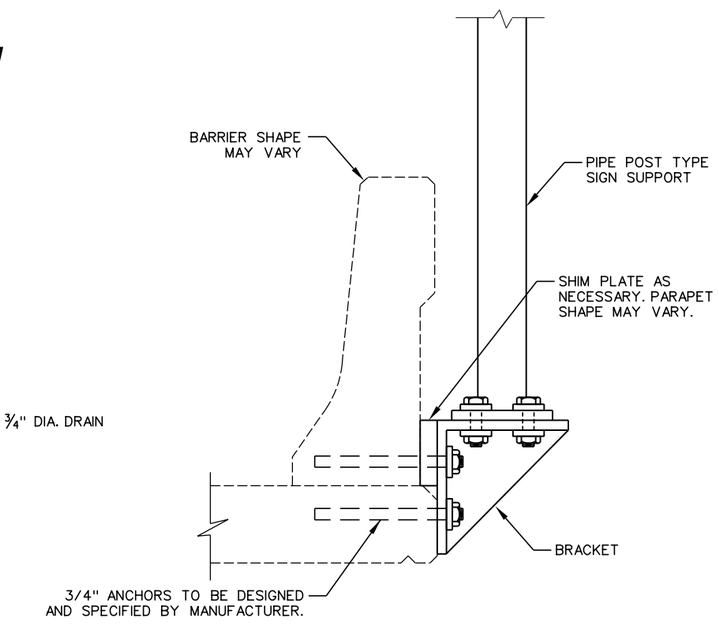

TYPE L - PIPE POST MOUNT
RETROFIT

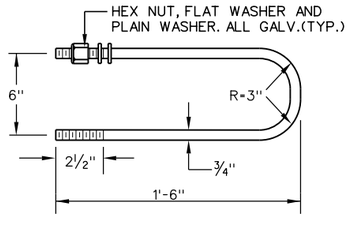

U-TYPE ANCHOR BOLT
2 REQUIRED ⚠1

FOR SIGNS TWELVE (12) INCHES OR LESS IN ACTUAL WIDTH TO BE INSTALLED ON PARAPETS, THE TYPE A BARRIER WALL SIGN SUPPORT BRACKET DESCRIBED IN SECTION 657 OF THE STANDARD SPECIFICATIONS SHALL BE SPECIFIED IN LIEU OF THE TYPE K OR L BRIDGE OR RETAINING WALL SIGN MOUNTING BRACKETS. THIS IS PROVIDED THE ALLOWABLE LOADING ON THE TYPE A BARRIER WALL SIGN SUPPORT BRACKET WILL NOT BE EXCEEDED. THE TYPE A BARRIER WALL SIGN SUPPORT BRACKET IS REQUIRED TO WITHSTAND LOADING WHICH MEETS OR EXCEEDS THAT WHICH WILL BE GENERATED BASED ON THE LIMITS PROVIDED FOR THE THREE (3) LB PER FOOT U-CHANNEL SUPPORT ON THE SUPPORT SIZE SELECTION CHART ON SHEET TE1-7A. IF THE TYPE A BRACKET IS SPECIFIED, THE "SQUARE TUBE SUPPORT," 2.00X14GA" BID ITEM SHALL BE SPECIFIED AND USED FOR PAYMENT OF THE SUPPORT.

⚠1 ADDED NOTE 4.
REMOVED REFERENCE TO TYPES 7 & 8.
INCREASED WIDTH OF BRACKET AND
INCREASED NO. OF ANCHORS TO 8.

WEST VIRGINIA DEPARTMENT OF TRANSPORTATION
DIVISION OF HIGHWAYS
STANDARD DETAIL

PREPARED: 8/2018

REVISION DATE
⚠1 11/11/2022

BRIDGE OR RETAINING WALL SIGN MOUNTING

TYPE L PIPE POST MOUNT

STANDARD SHEET TE2-2

TRAFFIC ENGINEERING DIVISION

Z:\Projects\WVDOT\Standard Details, vol II\Final Submittal\Revised DGNs\Revised 4-2022\TE2-2 Rev. 11-11-2022.dgn

8/17/2023

J04C02C03-STDBDR c

* - SIZES AND SHAPES VARY

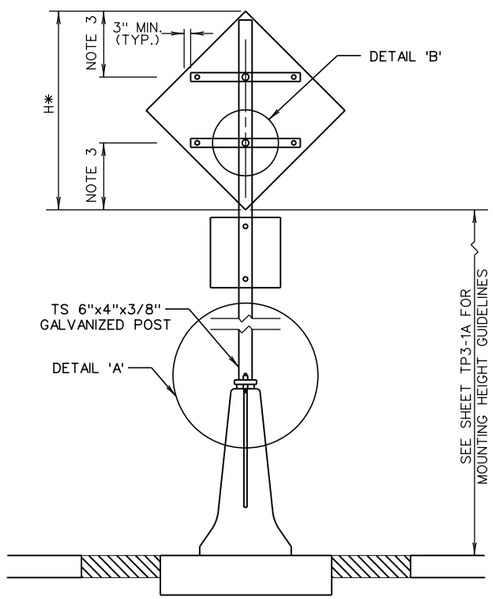

SECTION VIEW
N.T.S.

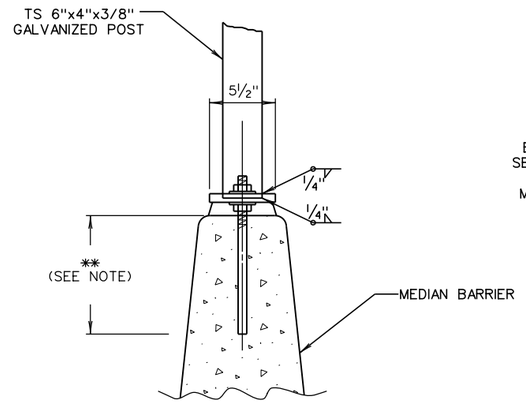

DETAIL 'A' - FRONT VIEW
N.T.S.

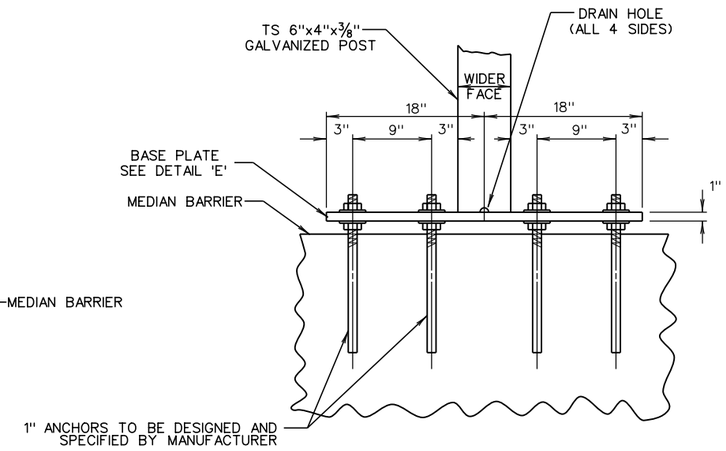

DETAIL 'A' - SIDE VIEW
N.T.S.

NOTES:

1. MATERIALS USED TO MANUFACTURE ANCHOR BOLTS, TS POST, PLATES, AND HARDWARE SHALL BE IN ACCORDANCE WITH THE STANDARD SPECIFICATIONS. ALL COMPONENTS SHALL BE GALVANIZED IN ACCORDANCE WITH THE STANDARD SPECIFICATIONS.
2. ALL SIGNS LESS THAN 36 INCHES IN WIDTH MAY BE MOUNTED TO THE TS SUPPORT WITHOUT THE GALVANIZED STEEL BAR USING THE STANDARD PUNCHING PATTERN FOR DIRECT MOUNT TYPES SHOWN ON TP1 SERIES STANDARDS.
3. VERTICAL PLACEMENT OF GALVANIZED STEEL BARS SHALL MATCH THE VERTICAL PLACEMENT OF THE STANDARD PUNCHING PATTERN SHOWN ON THE TP1 SERIES STANDARDS. THE GALVANIZED STEEL BARS MAY BE TRIMMED AS NEEDED TO ACHIEVE THE 3 INCH MIN. EDGE CLEARANCE. ADDITIONAL HOLES SHALL BE FIELD PUNCHED IN THE CENTER OF THE SIGN FOR ATTACHMENT TO THE STEEL BARS AND THE TS SUPPORT.
4. COSTS FOR CONCRETE BARRIER SIGN SUPPORT SHALL BE INCLUDED IN ITEM 657060-001, BARRIER WALL BRACKET, TYPE D.
5. EVERY EFFORT SHALL BE MADE TO LOCATE THE CENTER OF BASE PLATE AT THE MIDPOINT OF THE SPACE BETWEEN TWO JOINTS OF THE BARRIER. IN NO CASE SHALL THE EDGE OF THE BASE PLATE BE LESS THAN 6 INCHES FROM JOINTS IN BARRIER.
6. SIGN WIDTHS AND MOUNTING HEIGHTS SHALL BE IN CONFORMANCE WITH TP3-1A.
7. BEFORE SPECIFYING THE USE OF THE TYPE D BARRIER WALL SIGN SUPPORT BRACKET, DUE CONSIDERATION SHALL BE GIVEN TO THE USE OF EITHER THE TYPE A OR B BARRIER WALL SIGN SUPPORT BRACKET, AS DESCRIBED IN SECTION 657 OF THE STANDARD SPECIFICATIONS. FOR BARRIER SECTIONS TEN (10) INCHES OR WIDER IN WIDTH AT THE TOP, THE TYPE B BRACKET SHALL BE CONSIDERED. FOR BARRIER SECTIONS LESS THAN TEN (10) INCHES IN WIDTH AT THE TOP, THE TYPE A BRACKET SHOULD BE CONSIDERED. BOTH THE TYPE A AND B BARRIER WALL SIGN SUPPORT BRACKETS ARE REQUIRED TO WITHSTAND A LOADING WHICH MEETS OR EXCEEDS THAT WHICH WILL BE GENERATED BASED ON THE LIMITS PROVIDED FOR THE THREE (3) LB PER FOOT U-CHANNEL SUPPORT ON THE SUPPORT SIZE SELECTION CHART ON SHEET TE1-7A. IF EITHER THE TYPE A OR B BRACKET IS SPECIFIED, THE "SQUARE TUBE SUPPORT, 2.00X14GA" BID ITEM SHALL BE SPECIFIED AND USED FOR PAYMENT OF THE SUPPORT.

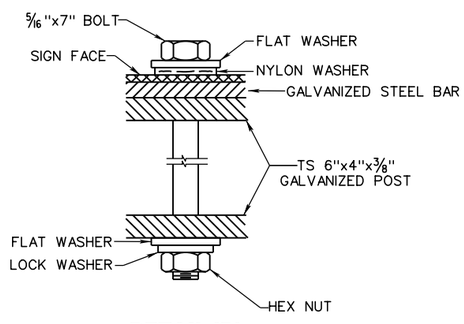

DETAIL 'D'

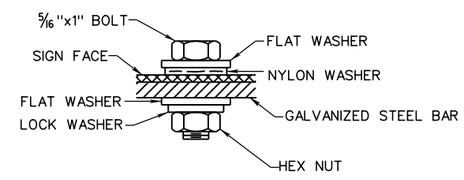

DETAIL 'C'

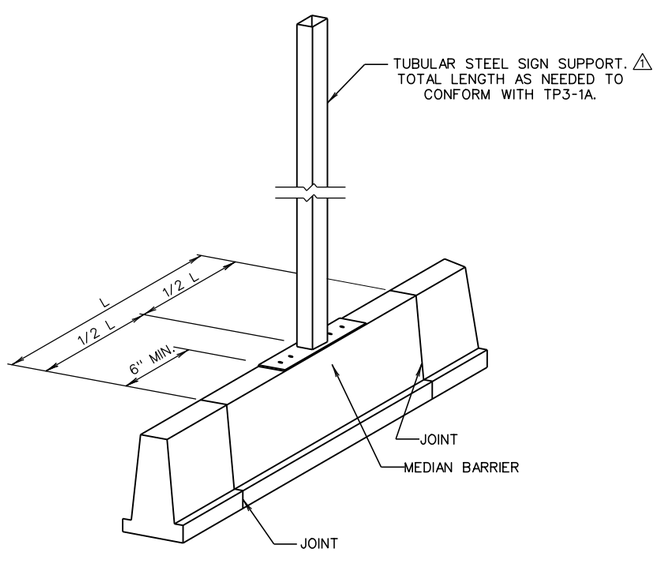

ISOMETRIC VIEW
N.T.S.

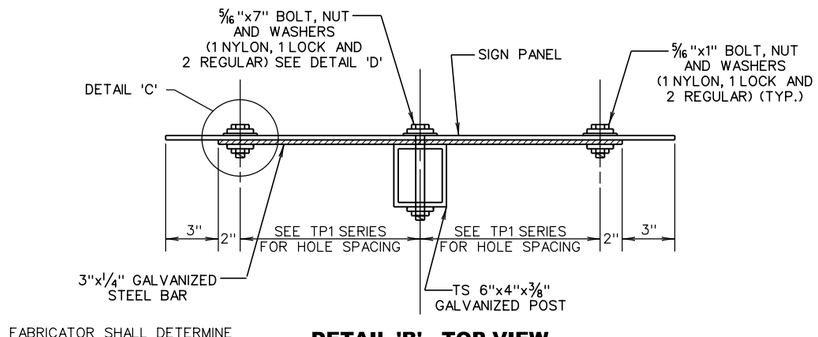

FABRICATOR SHALL DETERMINE LENGTH OF STEEL BAR BASED ON SIGN SIZE.

DETAIL 'B' - TOP VIEW
N.T.S.

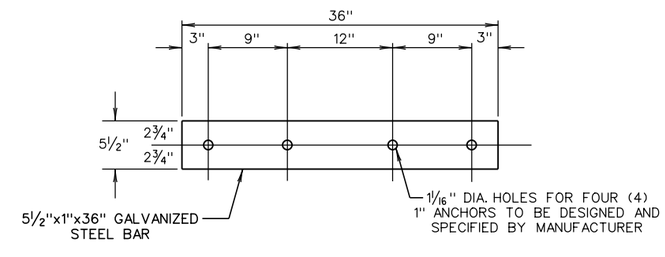

DETAIL 'E'
N.T.S.

TYPE D BARRIER WALL SIGN SUPPORT BRACKET

⚠ CLARIFIED TUBULAR STEEL POST

WEST VIRGINIA DEPARTMENT OF TRANSPORTATION
DIVISION OF HIGHWAYS
STANDARD DETAIL

PREPARED: 8/2018

REVISION DATE
⚠ 4/2022

BARRIER WALL SIGN SUPPORT BRACKET TYPE D

STANDARD SHEET TE2-3

TRAFFIC ENGINEERING DIVISION

Z:\Projects\WVDOT\Standard Details vol II\Final Submittal\Revised DGNs\Revised 4-2022\TE2-3 Rev 4-2022.dgn
8/17/2023
J04C02C03-STDBDR c

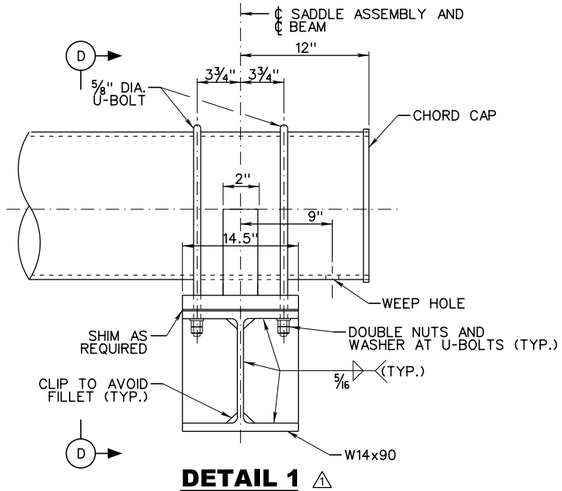

DETAIL 1 ⚠1

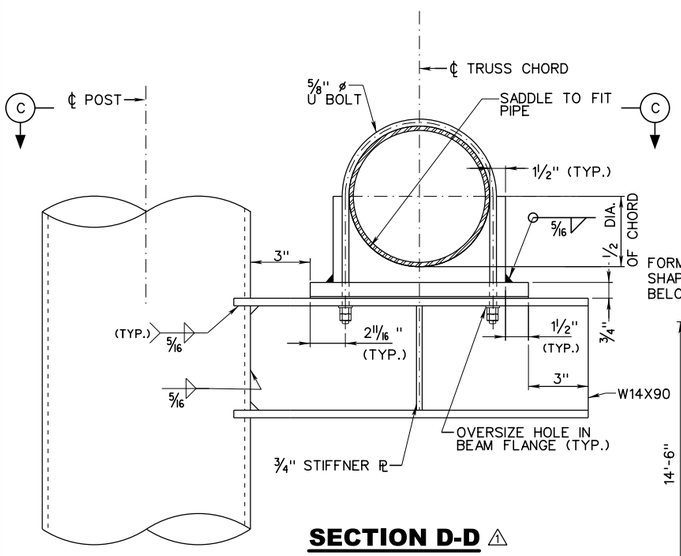

SECTION D-D ⚠1

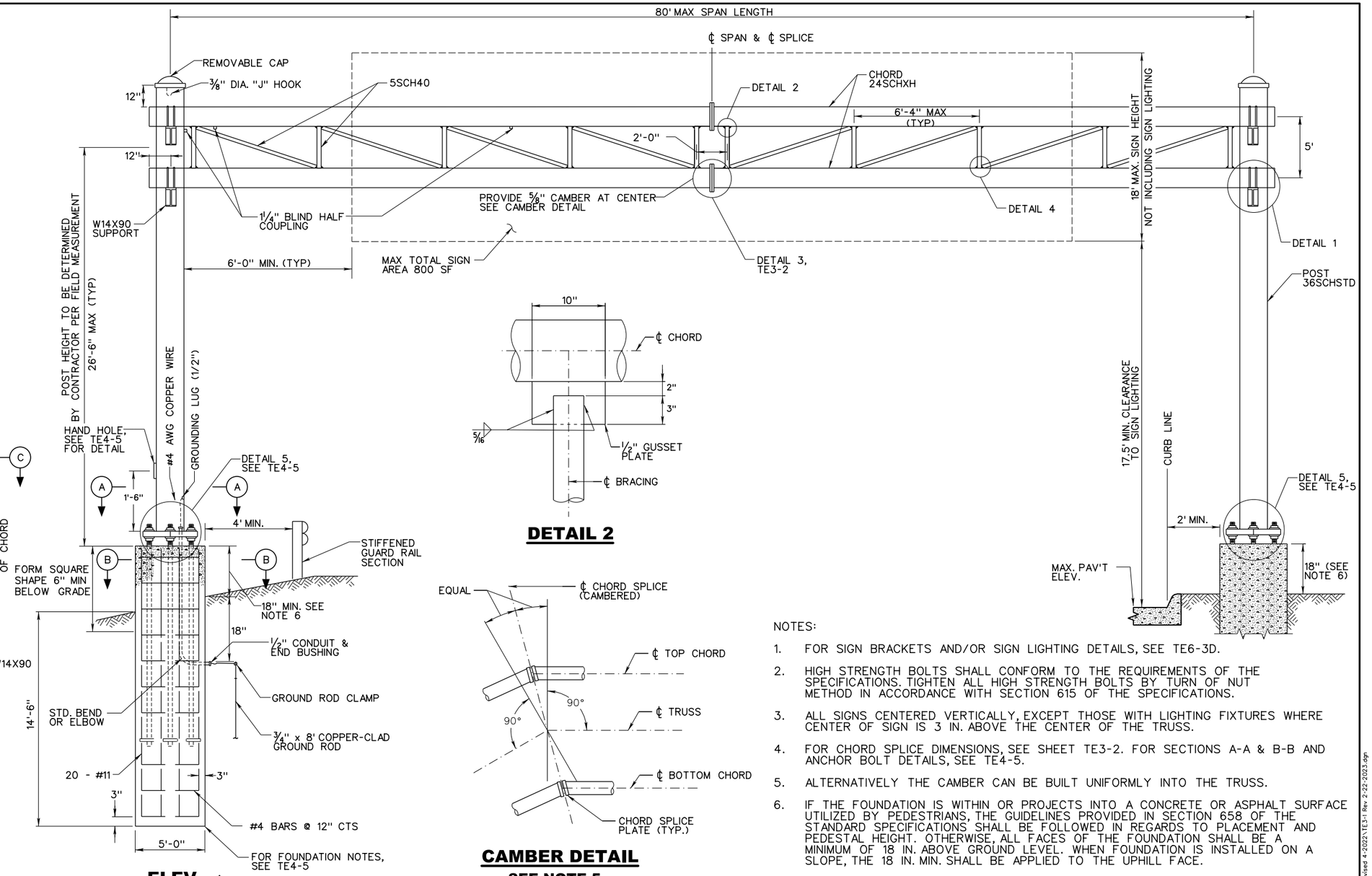

ELEV. ⚠1
SEE NOTE 4

DETAIL 2

CAMBER DETAIL
SEE NOTE 5

NOTES:

1. FOR SIGN BRACKETS AND/OR SIGN LIGHTING DETAILS, SEE TE6-3D.
2. HIGH STRENGTH BOLTS SHALL CONFORM TO THE REQUIREMENTS OF THE SPECIFICATIONS. TIGHTEN ALL HIGH STRENGTH BOLTS BY TURN OF NUT METHOD IN ACCORDANCE WITH SECTION 615 OF THE SPECIFICATIONS.
3. ALL SIGNS CENTERED VERTICALLY, EXCEPT THOSE WITH LIGHTING FIXTURES WHERE CENTER OF SIGN IS 3 IN. ABOVE THE CENTER OF THE TRUSS.
4. FOR CHORD SPLICE DIMENSIONS, SEE SHEET TE3-2. FOR SECTIONS A-A & B-B AND ANCHOR BOLT DETAILS, SEE TE4-5.
5. ALTERNATIVELY THE CAMBER CAN BE BUILT UNIFORMLY INTO THE TRUSS.
6. IF THE FOUNDATION IS WITHIN OR PROJECTS INTO A CONCRETE OR ASPHALT SURFACE UTILIZED BY PEDESTRIANS, THE GUIDELINES PROVIDED IN SECTION 658 OF THE STANDARD SPECIFICATIONS SHALL BE FOLLOWED IN REGARDS TO PLACEMENT AND PEDESTAL HEIGHT. OTHERWISE, ALL FACES OF THE FOUNDATION SHALL BE A MINIMUM OF 18 IN. ABOVE GROUND LEVEL. WHEN FOUNDATION IS INSTALLED ON A SLOPE, THE 18 IN. MIN. SHALL BE APPLIED TO THE UPHILL FACE.
7. DESIGN IS IN ACCORDANCE WITH AASHTO STANDARD SPECIFICATIONS FOR STRUCTURAL SUPPORTS FOR HIGHWAY SIGNS, LUMINAIRES, AND TRAFFIC SIGNALS, 6TH EDITION, 2013, USING 90 MPH WIND SPEED AND FATIGUE CATEGORY I.
8. SEE SHEET TE6-3A FOR GROUNDING NOTES.

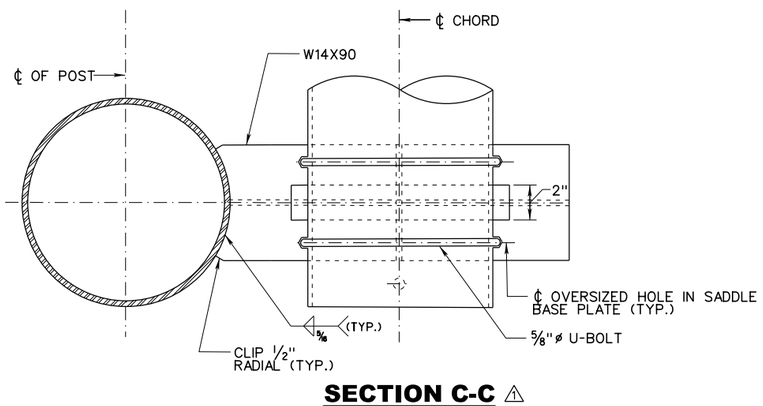

SECTION C-C ⚠1

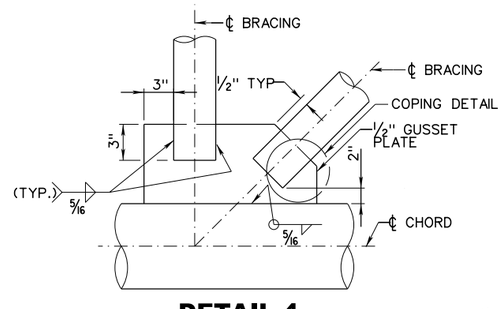

DETAIL 4

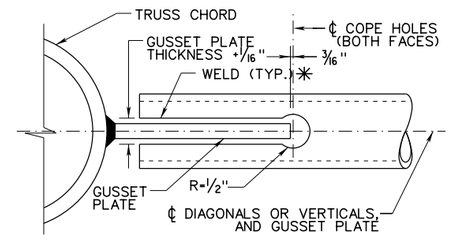

COPING DETAIL

✳ PROVIDE A WELD 'HOLDBACK' AT THE EDGE OF THE GUSSET PLATE IN THE BRACING MEMBERS EQUAL TO THE WELD SIZE REQUIRED.

⚠1 REVISED BRACKET DETAILS AND FOUNDATION DIAMETER

DETAILS SHOWN ON THIS DRAWING ARE NOT TO SCALE FOR VISUAL CLARITY.

WEST VIRGINIA DEPARTMENT OF TRANSPORTATION
DIVISION OF HIGHWAYS
STANDARD DETAIL

PREPARED: 8/2018
REVISION DATE
⚠1 2/22/2023

OVERHEAD SIGN SUPPORT-STEEL TWO TUBE SPAN (TTS)

STANDARD SHEET TE3-1

TRAFFIC ENGINEERING DIVISION

J04C02C03-STDBDR c

8/17/2023 Z:\Projects\WVDOT\Standard Details vol I\Final Submittal\Revised DGNs\Revised 4-2022\TE3-1 Rev 2-22-2023.dgn

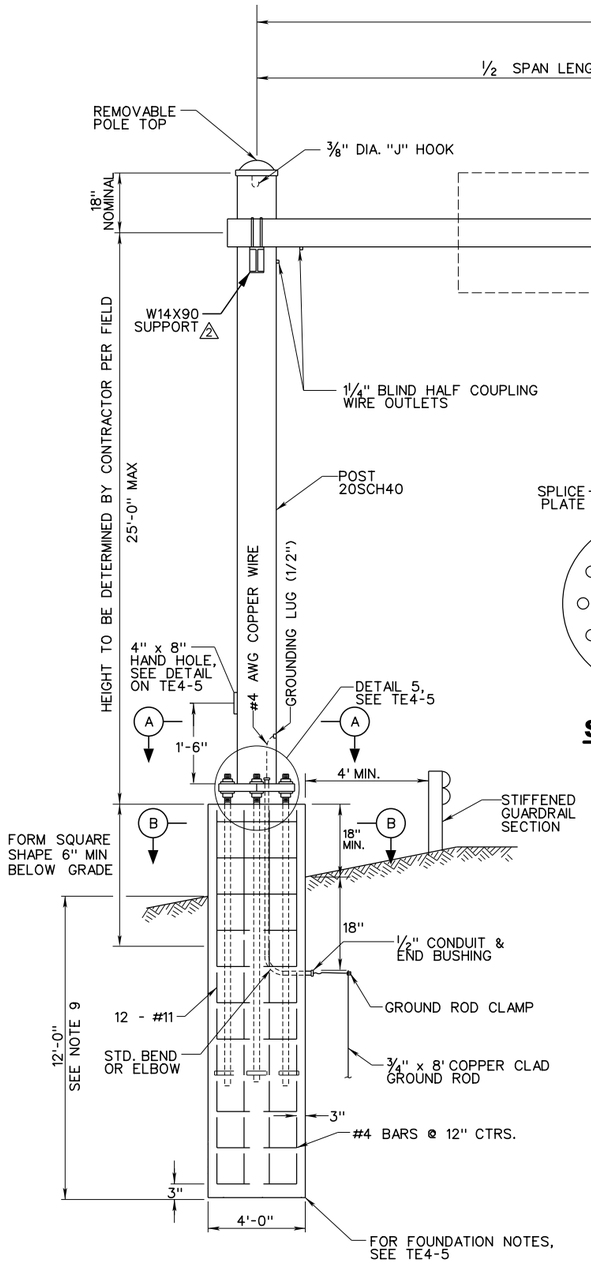

ELEVATION

(FOR SECTION A-A, B-B, SEE TE4-5)

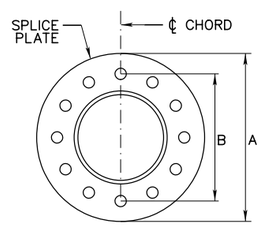

SECTION E-E

SEE NOTE 4

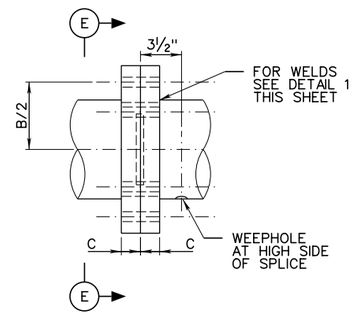

DETAIL 3

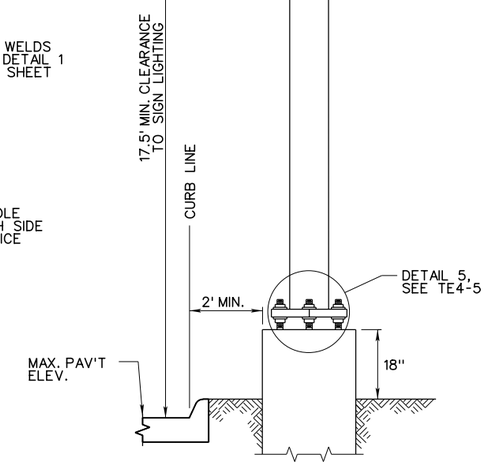

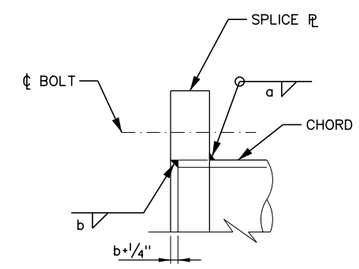

DETAIL 1

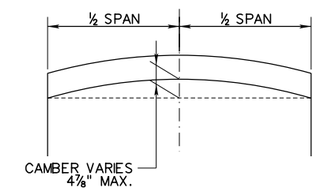

CAMBER REQUIRED △1

NOTES:

1. FOR SIGN BRACKETS AND/OR SIGN LIGHTING DETAILS, SEE TE6-3D.
2. HI-STRENGTH BOLTS SHALL CONFORM TO THE REQUIREMENTS OF OF THE SPECIFICATIONS. TIGHTEN ALL HIGH STRENGTH BOLTS BY TURN OF NUT METHOD IN ACCORDANCE WITH THE SPECIFICATIONS.
3. ALL SIGNS CENTERED VERTICALLY, EXCEPT THOSE WITH LIGHTING FIXTURES WHERE CENTER OF SIGN IS 3 IN. ABOVE THE CENTER OF THE TRUSS.
4. FOR ANCHOR BOLT DETAILS, SEE TE4-5.
5. FOR SECTIONS A-A & B-B, SEE TE4-5.
6. IF THE FOUNDATION IS WITHIN OR PROJECTS INTO A CONCRETE OR ASPHALT SURFACE UTILIZED BY PEDESTRIANS, THE GUIDELINES PROVIDED IN SECTION 658 OF THE STANDARD SPECIFICATIONS SHALL BE FOLLOWED IN REGARDS TO PLACEMENT AND PEDESTAL HEIGHT. OTHERWISE, ALL FACES OF THE FOUNDATION SHALL BE A MINIMUM OF 18 IN. ABOVE GROUND LEVEL. WHEN FOUNDATION IS INSTALLED ON A SLOPE, THE 18 IN. MIN. SHALL BE APPLIED TO THE UPHILL FACE.
7. DESIGN IS IN ACCORDANCE WITH AASHTO STANDARD SPECIFICATIONS FOR STRUCTURAL SUPPORTS FOR HIGHWAY SIGNS, LUMINAIRES, AND TRAFFIC SIGNALS, 6TH EDITION, 2013, USING 90 MPH WIND SPEED AND FATIGUE CATEGORY I.
8. SEE SHEET TE6-3A FOR GROUNDING NOTES.
9. DEPTH OF FOUNDATION IS BASED ON AN ASSUMED SOIL SUCH AS MEDIUM CLAY OR SAND CLAY PROVIDING AN UNCONFINED COMPRESSIVE STRENGTH NOT LESS THAN 2500 LBS/SQFT. THESE FOUNDATIONS MAY BE USED IN COHESIONLESS TYPE SOILS PROVIDING THAT THE FRICTION ANGLE IS NOT LESS THAN 30 DEGREES.

DESIGN NO.	MAXIMUM SIGN AREA (SF)	CHORD SPLICE TABLE △2△3								BASE PLATE TABLE (SEE TE4-5 FOR SECTIONS & DETAILS) △2								
		CHORD NPS	PLATE			HIGH STRENGTH BOLTS		FILLET WELD		POST (NPS)	PLATE DIMENSION						ANCHOR BOLTS	
			A	B	C	NUMBER	DIA.	a	b		S	F	B	T	CENTER HOLE DIA.	BOLT HOLE	NO.	DIA.
TTS-XX	800	24SCHXH	32"	28"	2½"	12	1"	½"	¼"	36SCHSTD	59"	29.5"	43"	2"	25"	2⅜"	6	2"
OTS-XX	500	24SCHXH	32"	28"	2½"	12	1"	½"	¼"	20SCH30	38"	19"	26"	2½"	8"	1⅞"	6	1½"

XX TO DENOTE THE SPAN LENGTH REQUIRED.

△1 ADDED CAMBER INFORMATION
△2 REVISED TABLE, REVISED BRACKET SIZE
△3 REVISED OTS CHORD SIZE & AFFECTED DIMENSIONS

WEST VIRGINIA DEPARTMENT OF TRANSPORTATION
DIVISION OF HIGHWAYS
STANDARD DETAIL

PREPARED: 8/2018

REVISION DATE
△1 6/2022
△2 2/22/2023
△3 8/15/2023

OVERHEAD SIGN SUPPORT-STEEL ONE TUBE SPAN (OTS)

STANDARD SHEET TE3-2

TRAFFIC ENGINEERING DIVISION

Z:\Projects\WV001\Standard Details vol I\Final Submittal\Revised DGNs\Revised 8-2023\TE3-2 Rev. 8-15-2023.dgn

8/17/2023

J04C02C03-STDBOR c

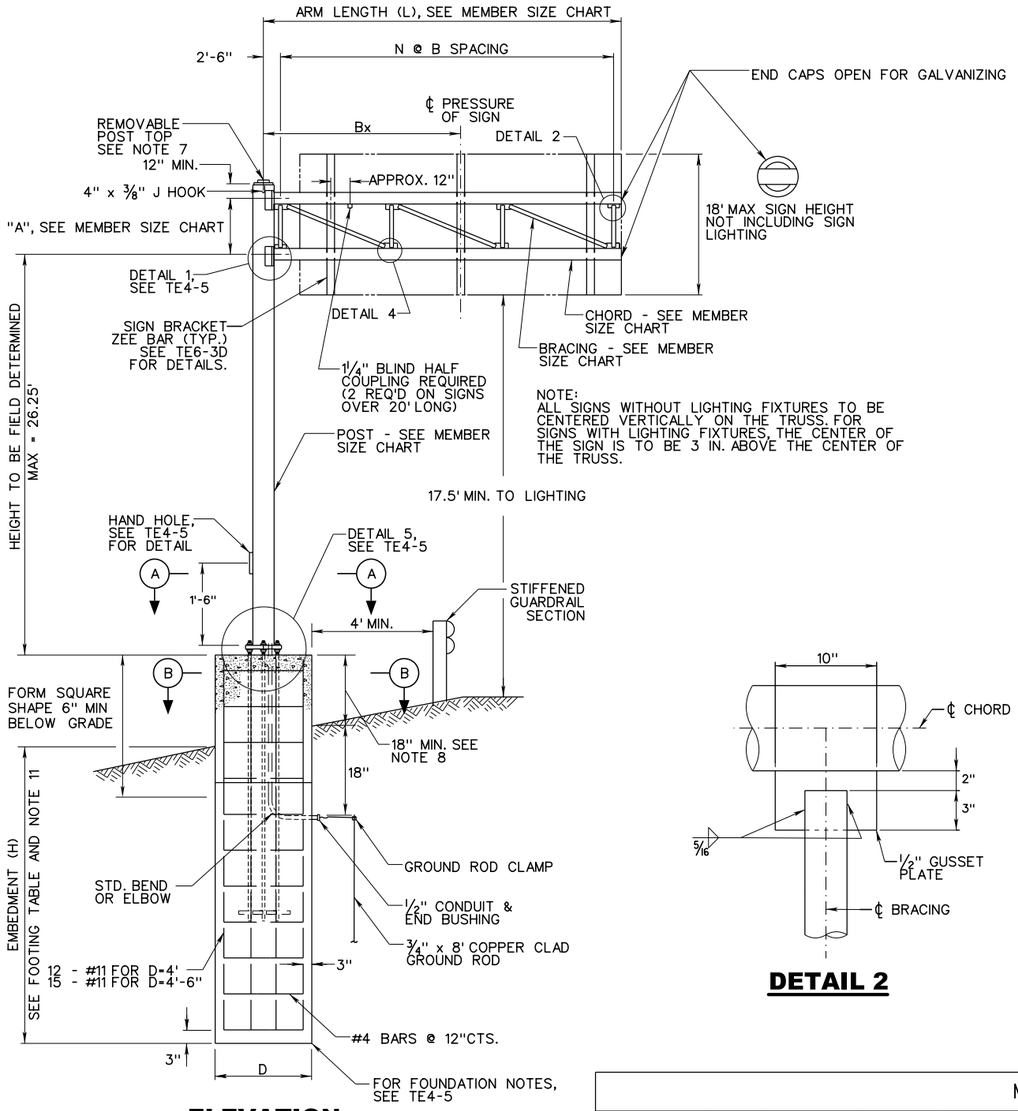

ELEVATION

POST = VERTICAL LEG SUPPORT

BASE PLATE = LEG PLATE

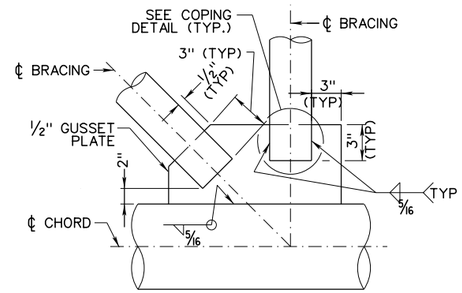

DETAIL 4

DETAIL 2

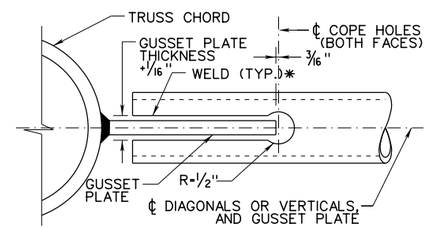

COPING DETAIL

* PROVIDE A WELD 'HOLDBACK' AT THE EDGE OF THE GUSSET PLATE IN THE BRACING MEMBERS EQUAL TO THE WELD SIZE REQUIRED.

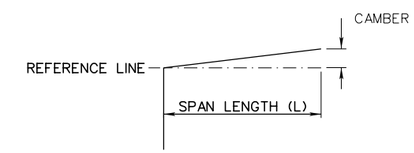

CAMBER DETAIL

NOTES:

1. THE STRUCTURES ARE DESIGNED IN ACCORDANCE WITH THE AASHTO STANDARD SPECIFICATIONS FOR STRUCTURAL SUPPORTS FOR HIGHWAY SIGNS, LUMINAIRES, AND TRAFFIC SIGNALS, 6TH EDITION, 2013, USING 90 MPH WIND SPEED AND FATIGUE CATEGORY I.
2. FOR SECTION A-A, B-B & D-D, SEE TE4-5.
3. FOR FOUNDATION NOTES, SEE TE4-5.
4. FOR ANCHOR BOLT DETAIL, SEE TE4-5.
5. HI-STRENGTH BOLTS SHALL CONFORM TO THE REQUIREMENTS OF THE SPECIFICATIONS. TIGHTEN ALL HIGH STRENGTH BOLTS IN ACCORDANCE WITH THE SPECIFICATIONS.
6. DETAILS LABELED AS 'NOT TO SCALE' ARE INTENTIONALLY NOT DRAWN TO SCALE FOR VISUAL CLARITY.
7. THE REMOVABLE CAP SHOULD BE A FRICTION TYPE CAP. FOR REQUIREMENTS AND DETAILS, SEE NOTES ON SHEET TE1-5A.
8. IF THE FOUNDATION IS WITHIN OR PROJECTS INTO A CONCRETE OR ASPHALT SURFACE UTILIZED BY PEDESTRIANS, THE GUIDELINES PROVIDED IN SECTION 658 OF THE STANDARD SPECIFICATIONS SHALL BE FOLLOWED IN REGARDS TO PLACEMENT AND PEDESTAL HEIGHT. OTHERWISE, ALL FACES OF THE FOUNDATION SHALL BE A MINIMUM OF 18 IN. ABOVE GROUND LEVEL. WHEN FOUNDATION IS INSTALLED ON A SLOPE, THE 18 IN. MIN. SHALL BE APPLIED TO THE UPHILL FACE.
9. FOR A STRUCTURE WITH ARM LENGTH VARYING FROM THE DESIGN LENGTHS SPECIFIED, SIZE MEMBER DIMENSIONS BASED ON THE NEXT LONGER ARM LENGTH IN THE CHART AND ADJUST PANEL WIDTH (B) ACCORDINGLY WHILE RETAINING THE NUMBER OF PANELS (N).
10. SEE SHEET TE6-3A FOR GROUNDING NOTES.
11. DEPTH OF FOUNDATION IS BASED ON AN ASSUMED SOIL SUCH AS MEDIUM CLAY OR SAND CLAY PROVIDING AN UNCONFINED COMPRESSIVE STRENGTH NOT LESS THAN 2500 LBS/SQFT. THESE FOUNDATIONS MAY BE USED IN COHESION-LESS TYPE SOILS PROVIDING THAT THE FRICTION ANGLE IS NOT LESS THAN 30 DEGREES.

MEMBER SIZE CHART △1 △2

DESIGN NUMBER	L (FT)	Bx	A	B	N	MAX. CAMBER	CHORD (NPS)	BRACING (NPS)	POST (NPS)	MAX SIGN AREA (SF)
DAC-16	16	9'-3"	5'-0"	4'-4"	3	7/8"	10SCH40	2.5SCH40	24SCHXH	245
DAC-24	24	13'-3"	5'-6"	5'-3"	4	1 1/2"	16SCH40	4SCH40	24SCH40	390
DAC-32	32	19'-6"	6'-0"	5'-9"	5	3 1/8"	16SCH40	4SCH40	30SCHXH	450
DAC-40	40	29'-0"	6'-6"	6'-2"	6	5 1/2"	18SCHXH	5SCH40	30SCHXH	400

L=ARM LENGTH
Bx=℄ POST TO ℄ SIGN PRESSURE
A=℄ OF CHORD TO ℄ OF CHORD
B=LENGTH OF EACH PANEL
N=NUMBER OF TRUSS PANELS
d=OUTSIDE DIAMETER (IN.)
t=PIPE THICKNESS (IN.)
NPS=NOMINAL PIPE SIZE
CAMBER MAY VARY.

FOOTING TABLE △1

DESIGN NUMBER	POST (DIA. IN.)	PLATE DIMENSION S	PLATE DIMENSION F	PLATE DIMENSION T	PLATE DIMENSION B	MAX. HOLE DIA.	ANCHOR BOLTS NO.	ANCHOR BOLTS DIA.	ANCHOR BOLTS HOLE	FOOTING EMBEDMENT (H)	FOOTING DIAMETER (D)
DAC-16	24	44"	22"	2"	31"	14"	6	1 3/4"	2 1/8"	11'-0"	4'-0"
DAC-24	24	44"	22"	3"	31"	4"	6	2"	2 3/8"	12'-6"	4'-0"
DAC-32	30	48"	24"	4 1/4"	37"	4"	6	2"	2 3/8"	13'-2"	4'-6"
DAC-40	30	48"	24"	4 1/4"	37"	4"	6	2 1/4"	2 5/8"	14'-10"	4'-6"

BOX CONNECTION TABLE △1 △2

CHORD SIZE (NPS)	THICKNESS OF ARM END PLATE (A)	THICKNESS OF BOX FLANGE PLATE (B)	HOLE DIA.	BOX HEIGHT (HB)	OFFSET (X)	BOLT SIZE (BD) (IN)	NO. OF BOLTS TOP AND BOTTOM	SPACING (W)	NO. OF INTERM. ROWS	TOTAL NO. OF BOLTS
10	2 1/4"	1 1/8"	4"	9"	8"	7/8"	5	24"	2	14
16	2 1/4"	1 3/4"	7"	14"	7"	7/8"	6	26"	2	16
16	3"	2 1/8"	4"	14"	10"	7/8"	8	28"	2	20
18	3 1/2"	2 1/2"	5"	16"	9"	7/8"	8	30"	2	20

△1 REVISED MEMBER SIZE CHART, FOOTING TABLE, AND BOX CONNECTION TABLE
△2 REVISED DAC-40 CHORD SIZE; CORRECTED HOLE DIA.; ADDED BOLT SIZE COLUMN.

WEST VIRGINIA DEPARTMENT OF TRANSPORTATION
DIVISION OF HIGHWAYS
STANDARD DETAIL

PREPARED: 8/2018

REVISION	DATE
△1	2/22/2023
△2	8/15/2023

OVERHEAD SIGN SUPPORT-STEEL

DOUBLE ARM CANTILEVER

STANDARD SHEET TE4-3A

TRAFFIC ENGINEERING DIVISION

8/17/2023

Z:\Projects\WVDOT\Standard Details vol II\Final Submittal\Revised DGNs\Revised 8-2023\TE4-3A Rev. 8-15-2023.dgn

J04C02C03-STDBDR c

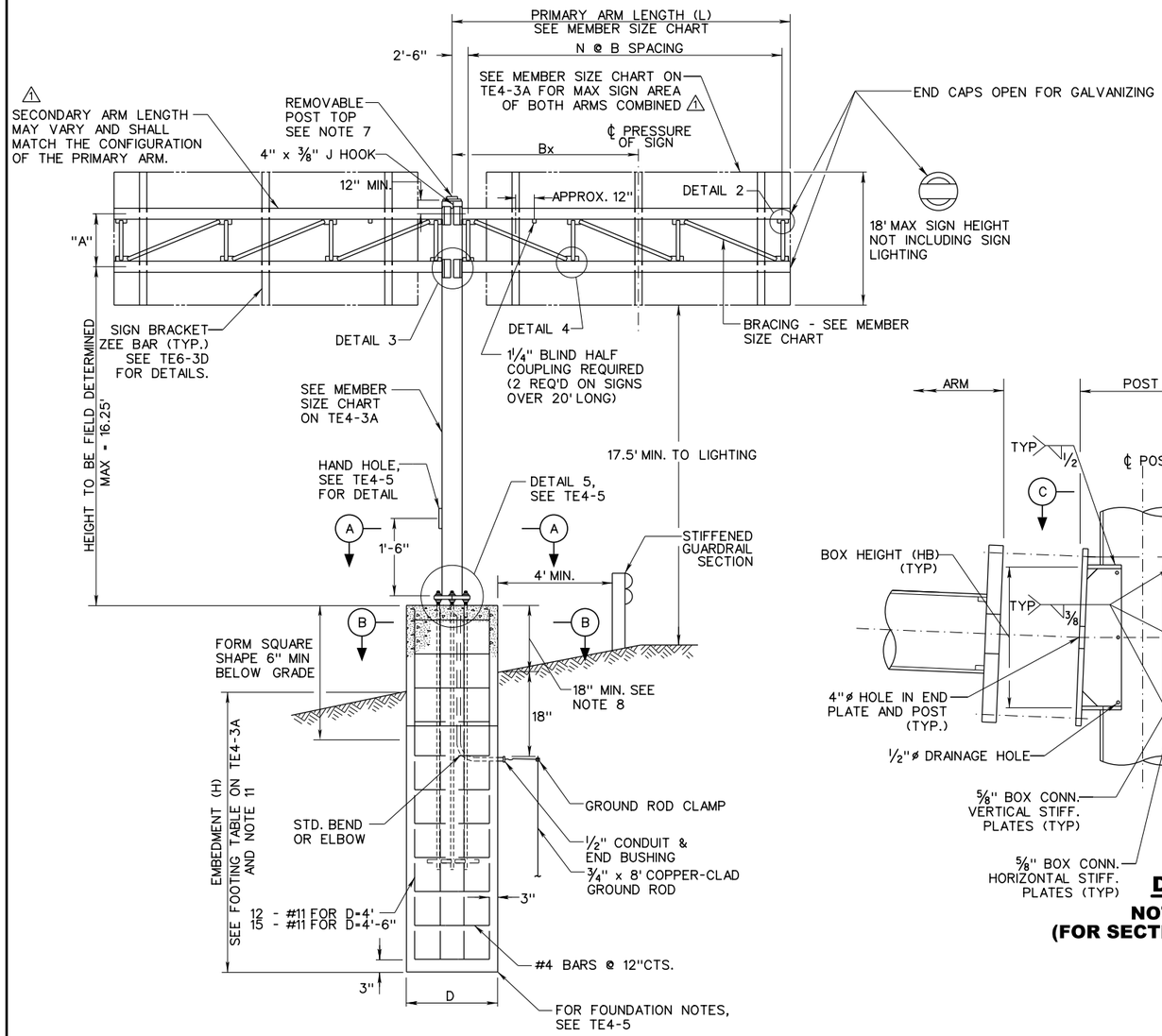

ELEVATION

SEE NOTE 2

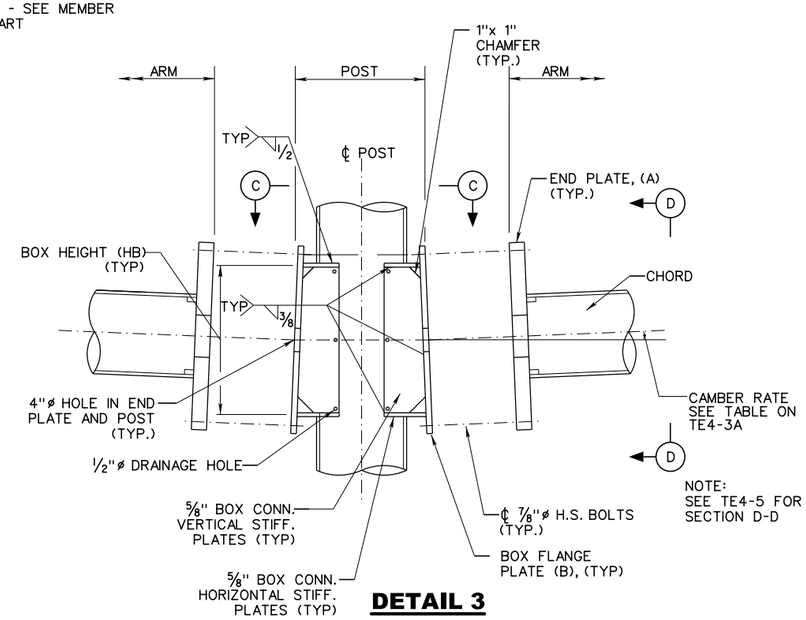

DETAIL 3

NOT TO SCALE
(FOR SECTION D-D, SEE TE4-5)

NOTES:

1. THE STRUCTURES ARE DESIGNED IN ACCORDANCE WITH THE AASHTO STANDARD SPECIFICATIONS FOR STRUCTURAL SUPPORTS FOR HIGHWAY SIGNS, LUMINAIRES, AND TRAFFIC SIGNALS, 6TH EDITION, 2013, USING 90 MPH WIND SPEED AND FATIGUE CATEGORY I.
2. FOR SECTION A-A, B-B & D-D, SEE TE4-5.
3. FOR FOUNDATION NOTES, SEE TE4-5.
4. FOR ANCHOR BOLT DETAIL, SEE TE4-5.
5. HI-STRENGTH BOLTS SHALL CONFORM TO THE REQUIREMENTS OF THE SPECIFICATIONS. TIGHTEN ALL HIGH STRENGTH BOLTS IN ACCORDANCE WITH THE SPECIFICATIONS.
6. DETAILS LABELED AS 'NOT TO SCALE' ARE INTENTIONALLY NOT DRAWN TO SCALE FOR VISUAL CLARITY.
7. THE REMOVABLE CAP SHOULD BE A FRICTION TYPE CAP. FOR REQUIREMENTS AND DETAILS, SEE NOTES ON SHEET TE1-5A.
8. IF THE FOUNDATION IS WITHIN OR PROJECTS INTO A CONCRETE OR ASPHALT SURFACE UTILIZED BY PEDESTRIANS, THE GUIDELINES PROVIDED IN SECTION 658 OF THE STANDARD SPECIFICATIONS SHALL BE FOLLOWED IN REGARDS TO PLACEMENT AND PEDESTAL HEIGHT. OTHERWISE, ALL FACES OF THE FOUNDATION SHALL BE A MINIMUM OF 18 IN. ABOVE GROUND LEVEL. WHEN FOUNDATION IS INSTALLED ON A SLOPE, THE 18 IN. MIN. SHALL BE APPLIED TO THE UPHILL FACE.
9. FOR A STRUCTURE WITH ARM LENGTH VARYING FROM THE DESIGN LENGTHS SPECIFIED, SIZE MEMBER DIMENSIONS BASED ON THE NEXT LONGER ARM LENGTH IN THE CHART AND ADJUST PANEL WIDTH (B) ACCORDINGLY WHILE RETAINING THE NUMBER OF PANELS (N).
10. SEE SHEET TE6-3A FOR GROUNDING NOTES.
11. DEPTH OF FOUNDATION IS BASED ON AN ASSUMED SOIL SUCH AS MEDIUM CLAY OR SAND CLAY PROVIDING AN UNCONFINED COMPRESSIVE STRENGTH NOT LESS THAN 2500 LBS/SQFT. THESE FOUNDATIONS MAY BE USED IN COHESIONLESS TYPE SOILS PROVIDING THAT THE FRICTION ANGLE IS NOT LESS THAN 30 DEGREES.

⚠ DESIGN NUMBER DESIGNATION

BUTTERFLY STYLE CANTILEVER SIGN SUPPORTS ARE MADE UP OF TWO DOUBLE ARM CANTILEVER ARMS ON OPPOSITE SIDES OF ONE SUPPORT POST, THE PRIMARY ARM AND THE SECONDARY ARM. IF DIFFERENT, THE PRIMARY ARM SHALL ALWAYS BE THE LONGER OF THE TWO. POST SIZE AND ARM CONFIGURATION (CHORD, BRACING, AND 'A' DIMENSION, ETC.) SHALL BE DETERMINED BASED ON THE PRIMARY ARM.

THE TOTAL SIGN AREA OF BOTH ARMS COMBINED SHALL NOT EXCEED THE MAX SIGN AREA LISTED IN THE MEMBER SIZE CHART ON TE4-3A FOR THE PRIMARY ARM.

SEE TABLES ON TE4-3A FOR STRUCTURE FABRICATION AND FOUNDATION DETAILS.

BUTTERFLY CANTILEVERS SHALL HAVE DESIGN NUMBERS IN THE FORMAT OF BC-XX-YY, WHERE XX = LENGTH OF PRIMARY ARM AND YY = LENGTH OF SECONDARY ARM.

FOR EXAMPLE, A BC-32-16 WOULD HAVE A PRIMARY ARM 32 FEET IN LENGTH AND A SECONDARY ARM 16 FEET IN LENGTH. IT WOULD HAVE A 30 INCH DIAMETER POST AND BOTH ARMS WOULD HAVE 16SCH40 CHORDS, 4SCH40 BRACING, AND 'A' DIMENSION OF 6'-0". THE TOTAL AREA OF SIGNS ON BOTH ARMS COMBINED CANNOT EXCEED 450 SF.

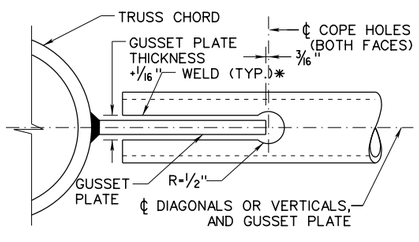

COPING DETAIL

* PROVIDE A WELD 'HOLDBACK' AT THE EDGE OF THE GUSSET PLATE IN THE BRACING MEMBERS EQUAL TO THE WELD SIZE REQUIRED.

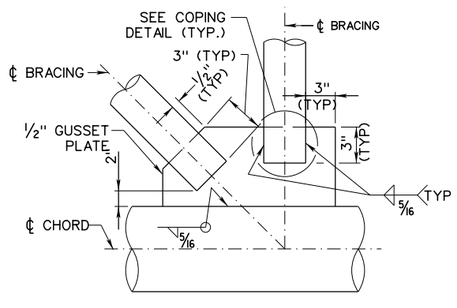

DETAIL 4

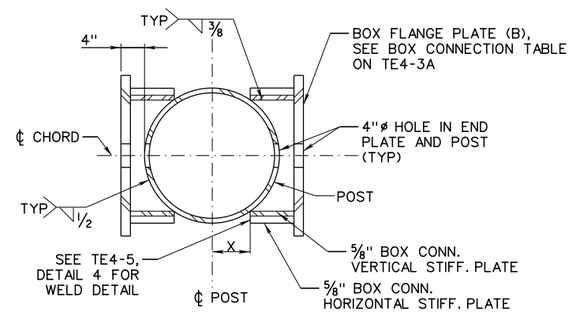

SECTION C-C

NOT TO SCALE

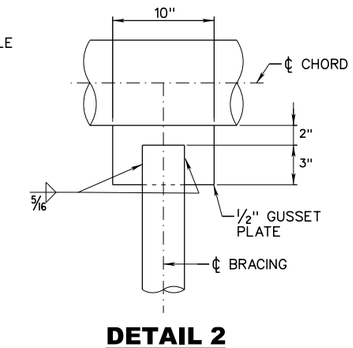

DETAIL 2

⚠1 REVISED RULES FOR ALLOWABLE SIGN AREA AND SECONDARY ARM MEMBER SIZES

WEST VIRGINIA DEPARTMENT OF TRANSPORTATION
DIVISION OF HIGHWAYS
STANDARD DETAIL

PREPARED: 8/2018

REVISION DATE
⚠1 2/22/2023

OVERHEAD SIGN SUPPORT-STEEL

BUTTERFLY CANTILEVER

STANDARD SHEET TE4-3B

TRAFFIC ENGINEERING DIVISION

Z:\Projects\WVDOT\Standard Details vol II\Final Submittal\Revised DGNs\Revised 4-2022\TE4-3B Rev 2-22-2023.dgn 8/17/2023

J04C02C03-STDBOR c

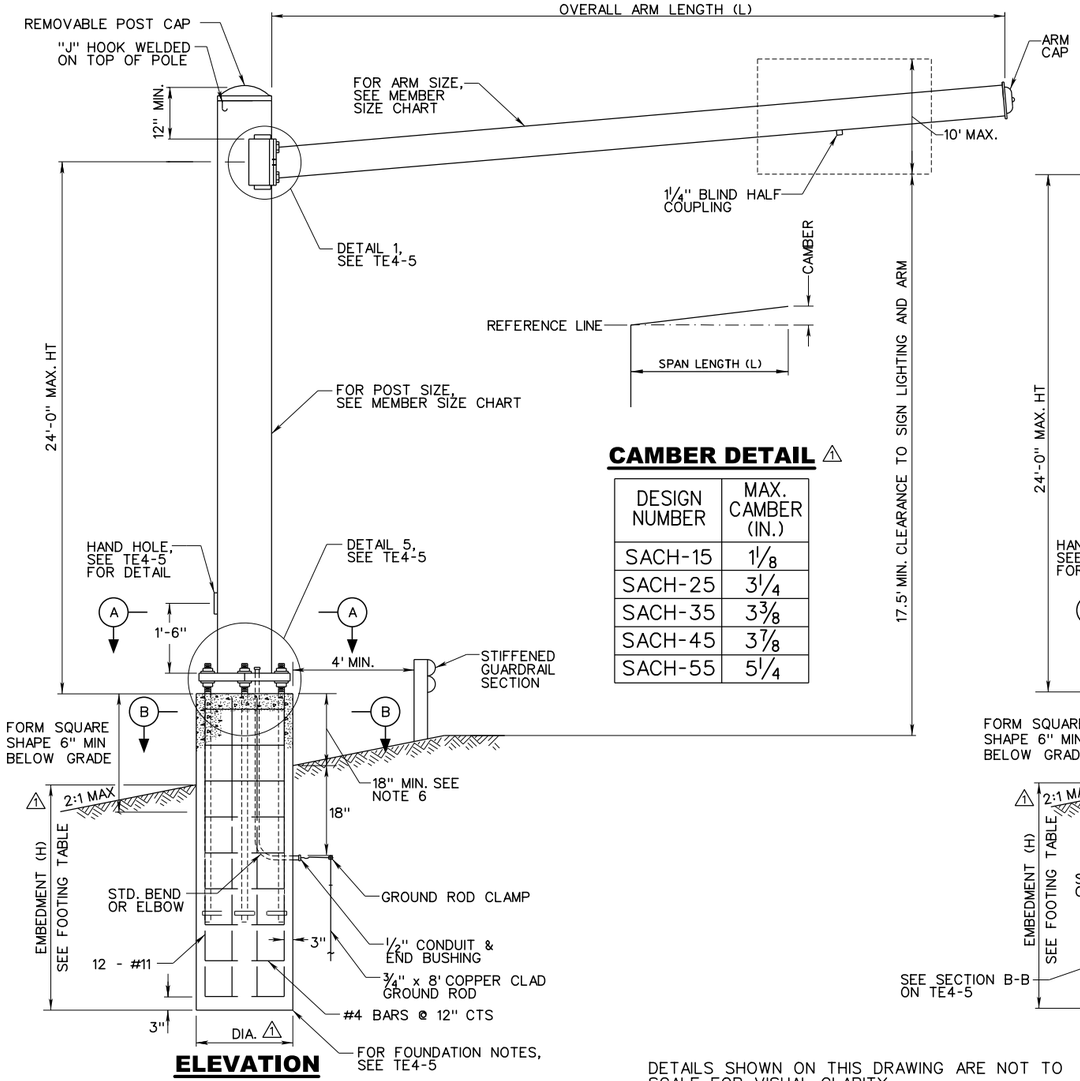

ELEVATION
(L=15', 25', 35')

CAMBER DETAIL

DESIGN NUMBER	MAX. CAMBER (IN.)
SACH-15	1⅛
SACH-25	3¼
SACH-35	3⅜
SACH-45	3⅞
SACH-55	5¼

DETAILS SHOWN ON THIS DRAWING ARE NOT TO SCALE FOR VISUAL CLARITY.

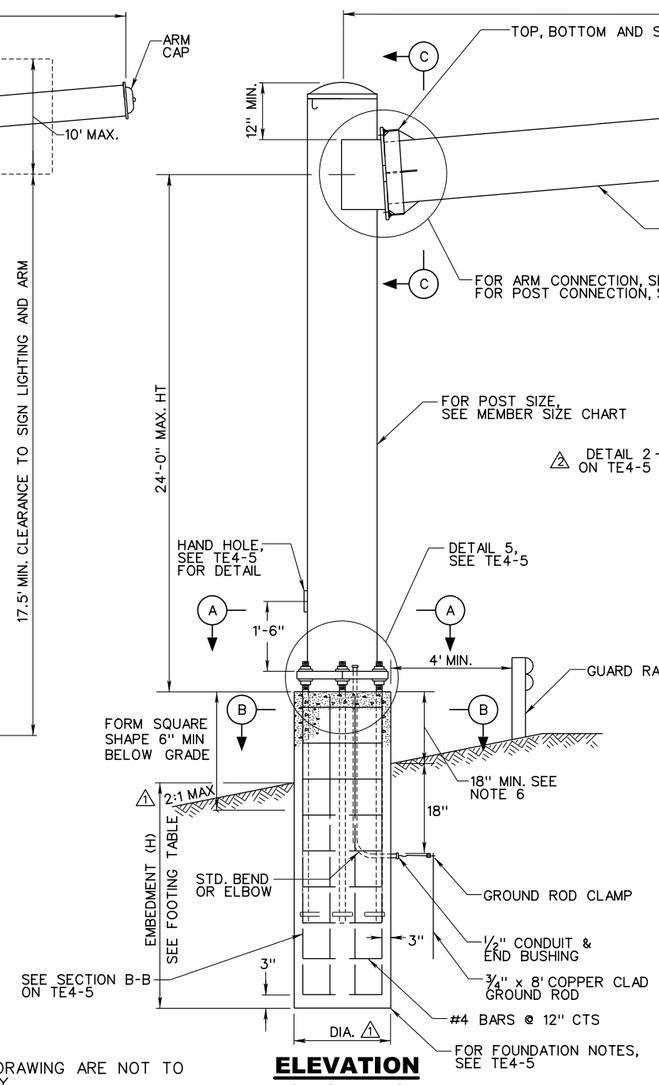

ELEVATION
(L=45', 55')

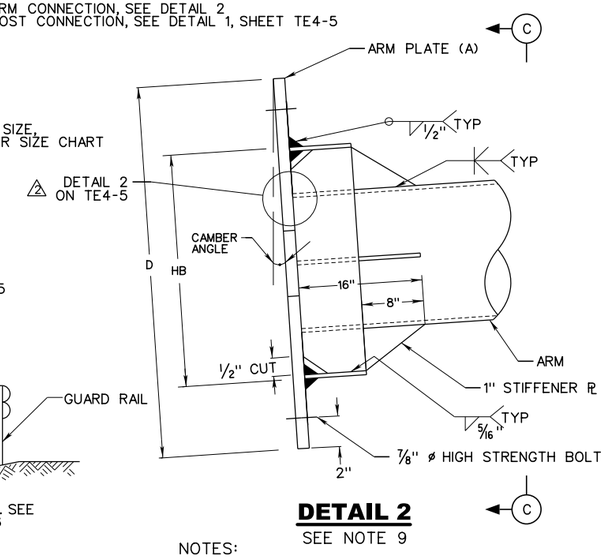

DETAIL 2
SEE NOTE 9

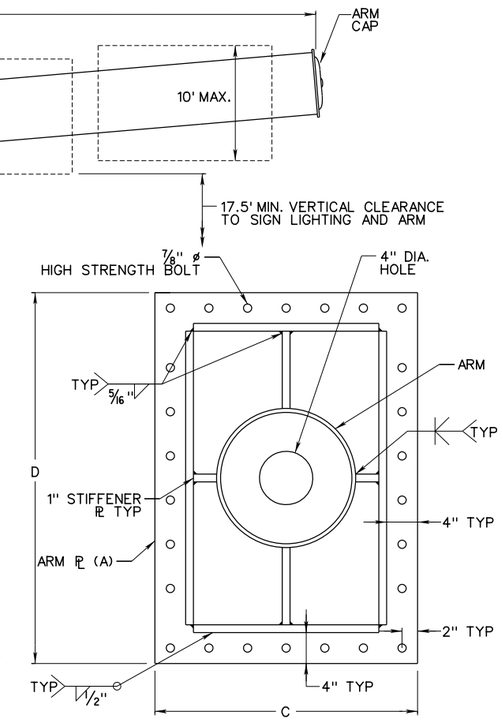

SECTION C-C

NOTES:

1. SIGN SHALL BE 10 SF OR GREATER.
2. ALL SIGNS CENTERED VERTICALLY EXCEPT WITH LIGHTING FIXTURES THE CENTER OF THE SIGN IS 3 IN. ABOVE THE CENTER OF THE ARM. ADD 1 FT TO SIGN HEIGHT FOR LIGHTING FIXTURE IN COMPUTING SIGN AREA.
3. HI-STRENGTH BOLTS SHALL CONFORM TO THE REQUIREMENTS OF THE SPECIFICATIONS. TIGHTEN ALL HIGH STRENGTH BOLTS IN ACCORDANCE WITH THE SPECIFICATIONS.
4. FOR SIGN BRACKETS AND/OR SIGN LIGHTING DETAILS, SEE TE6-3D.
5. FOR SECTIONS A-A & B-B AND ANCHOR BOLT DETAILS, SEE TE4-5.
6. IF THE FOUNDATION IS WITHIN OR PROJECTS INTO A CONCRETE OR ASPHALT SURFACE UTILIZED BY PEDESTRIANS, THE GUIDELINES PROVIDED IN SECTION 658 OF THE STANDARD SPECIFICATIONS SHALL BE FOLLOWED IN REGARDS TO PLACEMENT AND PEDESTAL HEIGHT. OTHERWISE, ALL FACES OF THE FOUNDATION SHALL BE A MINIMUM OF 18 IN. ABOVE GROUND LEVEL. WHEN FOUNDATION IS INSTALLED ON A SLOPE, THE 18 IN. MIN. SHALL BE APPLIED TO THE UPHILL FACE.
7. DESIGN IS IN ACCORDANCE WITH AASHTO STANDARD SPECIFICATIONS FOR STRUCTURAL SUPPORTS FOR HIGHWAY SIGNS, LUMINAIRES, AND TRAFFIC SIGNALS, 6TH EDITION, 2013 USING 90 MPH WIND SPEED AND FATIGUE CATEGORY I.
8. SEE SHEET TE6-3A FOR GROUNDING NOTES.
9. FOR ANY ARM CONNECTION DETAIL DIFFERENT THAN SHOWN, THE DESIGN AND CHECKING WILL BE THE RESPONSIBILITY OF THE MANUFACTURER AND MUST BE APPROVED BY TRAFFIC ENGINEERING DIVISION.
10. DEPTH OF FOUNDATION IS BASED ON AN ASSUMED SOIL SUCH AS MEDIUM CLAY OR SAND CLAY △1 PROVIDING AN UNCONFINED COMPRESSIVE STRENGTH NOT LESS THAN 750 LBS/SQFT. THESE FOUNDATIONS MAY BE USED IN COHESIONLESS TYPE SOILS PROVIDING THAT THE FRICTION ANGLE IS NOT LESS THAN 30 DEGREES.

BOX CONNECTION TABLE (SEE TE4-5 FOR SECTIONS) △1 △2

DESIGN NUMBER	ARM SIZE (NPS)	THICKNESS OF ARM END PLATE (A) (IN)	THICKNESS OF BOX FLANGE PLATE (B) (IN)	BOX HEIGHT (HB) (IN)	BOLT SIZE (BD) (IN)	NO. OF BOLTS TOP AND BOTTOM	NO. OF INTERM. ROWS	TOTAL NO. OF BOLTS	W (IN)
SACH-15	10	2½	1	8	⅞	5	2	14	20¼
SACH-25	14	2¾	1½	14	1	5	2	14	20⅝
SACH-35	20	2¾	1¾	20	1	5	4	18	29⅞

FOOTING TABLE (SEE TE4-5 FOR SECTIONS & ANCHOR BOLT DETAIL) △1 △2

DESIGN NUMBER	POST (NPS)	PLATE DIMENSION						ANCHOR BOLTS		FOOTING	
		S (IN)	F (IN)	T (IN)	B (IN)	HOLE DIA. (MIN-MAX)	BOLT HOLE (IN)	NO.	DIA. (IN)	DIA.	EMBEDMENT (H)
SACH-15	14	24	12	2	19	4"-8"	1⅝	6	1¼	4'-0"	11'-0"
SACH-25	14	26	13	3	20	4"	1⅝	6	1¼	4'-0"	14'-0"
SACH-35	24	35	17½	2	29	4"-20"	2⅛	6	1¾	4'-0"	21'-0"
SACH-45	36	52	26	2	42	4"-7"	2⅜	6	2	5'-6"	21'-0"
SACH-55	42	58	29	2½	48	4"-12"	2⅝	6	2¼	6'-0"	23'-0"

△2 REVISED VARIOUS MEMBER SIZES AND AFFECTED DIMENSIONS. ADDED LABEL TO DETAIL 2.

MEMBER SIZE CHART △1 △2

DESIGN NUMBER	L (FT.)	MAX SIGN AREA (SF)	POST	ARM	CHORD SPLICE TABLE (SEE TE3-2, DETAIL 3 & SECTION E-E)						
					PLATE			HIGH STRENGTH BOLTS		FILLET WELD	
					A	B	C	NUMBER	DIA.	a	b
SACH-15	15	100	14SCHSTD	10SCH60							
SACH-25	25	90	14SCHXH	14SCHXH							
SACH-35	35	140	24SCHXH	20SCHXH							
SACH-45	45	200	36SCHXH	30SCHSTD	39"	52"	1¼"	36	1"	⅝"	¼"
SACH-55	55	200	42SCHXH	30SCHXH	39"	35"	1¼"	36	1"	⅝"	¼"

BOX CONNECTION TABLE △1 △2

DESIGN NUMBER	ARM SIZE (NPS)	THICKNESS OF ARM PLATE (A) (IN)	THICKNESS OF BOX FLANGE PLATE (B) (IN) SEE DETAIL 1 ON TE4-5	BOX HEIGHT (HB) (IN)	BOLT SIZE	C (IN.)	D (IN.)	NO. OF BOLTS TOP & BOTTOM	NO. OF INTERM. ROW	TOTAL NO. OF BOLTS
SACH-45	30	2¾	1¾	37	⅞	47	52	10	12	44
SACH-55	30	3"	2	43	⅞	53	52	10	12	44

△1 REVISED FOUNDATION DIAMETER AND EMBEDMENT DEPTH FOR 45' & 55' ARM LENGTHS.
ADDED SOIL PARAMETER NOTE AND 2:1 MAX. ALLOWABLE SLOPE TO ELEVATIONS.
REVISED BOX CONNECTION TABLE TO ADD W DIMENSION.
REVISED POST AND ARM SIZES FOR 45' & 55' ARM LENGTHS AND AFFECTED BASE PLATE DIMENSIONS.
MOVED FOOTING DIAMETER INFORMATION TO THE CHART.
ADDED BASE PLATE HOLE SIZE INFORMATION.
ADDED CAMBER DETAIL AND CHART.

WEST VIRGINIA DEPARTMENT OF TRANSPORTATION
DIVISION OF HIGHWAYS
STANDARD DETAIL

PREPARED: 8/2018
REVISION DATE
△1 11/18/2022
△2 8/15/2023

OVERHEAD SIGN SUPPORT-STEEL

SINGLE ARM CANTILEVER (HEAVY)

STANDARD SHEET TE4-4A

TRAFFIC ENGINEERING DIVISION

J04C02C03-STDBOR c

Z:\Projects\WVDOT\Standard Details vol II\Final Submittal\Revised DGNs\Revised 8-2023\TE4-4A Rev. 8-15-2023.dgn

8/17/2023

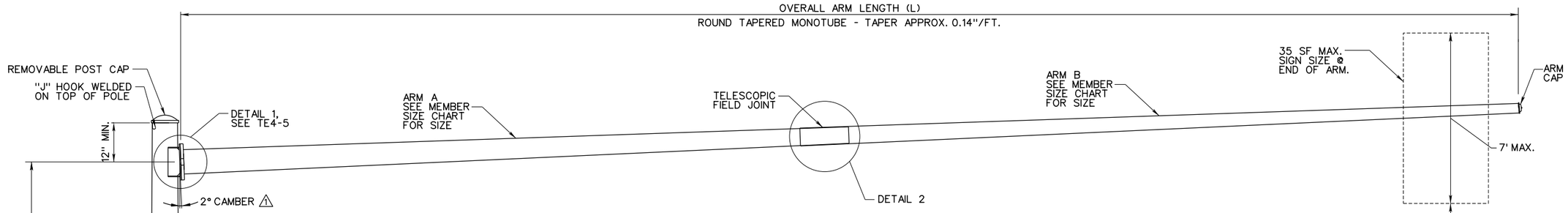

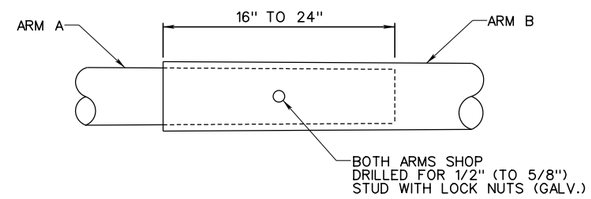

DETAIL 2
NOT TO SCALE

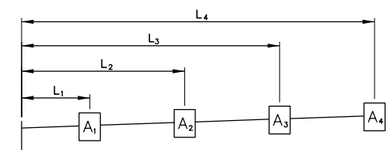

L=DISTANCE FROM POLE TO CENTER OF SIGN IN FT
A=AREA OF SIGN IN SF

TOTAL MOMENT=$(L_1 \times A_1)+(L_2 \times A_2)+(L_3 \times A_3)+(L_4 \times A_4)$

MULTIPLE SMALLER SIGNS ARE ALLOWED AS LONG AS THE TOTAL MOMENT DOES NOT EXCEED THE MAX. MOMENT.

MOMENT CALCULATION 1

NOTES:

1. SIGN SHALL BE 35 SF OR SMALLER, BUT NO SMALLER THAN 10 SF.
2. ALL SIGNS TO BE CENTERED VERTICALLY.
3. HI-STRENGTH BOLTS SHALL CONFORM TO THE REQUIREMENTS OF THE SPECIFICATIONS. TIGHTEN ALL HIGH STRENGTH BOLTS BY IN ACCORDANCE WITH THE SPECIFICATIONS.
4. FOR SIGN BRACKETS DETAILS, SEE TE6-3D.
5. FOR SECTION A-A & B-B, SEE TE4-5.
6. FOR FOUNDATION NOTES, SEE TE4-5.
7. FOR ANCHOR BOLT DETAIL, SEE TE4-5.
8. DETAILS LABELED AS 'NOT TO SCALE' ARE INTENTIONALLY NOT DRAWN TO SCALE FOR VISUAL CLARITY.
9. DESIGN IS IN ACCORDANCE WITH AASHTO STANDARD SPECIFICATIONS FOR STRUCTURAL SUPPORTS FOR HIGHWAY SIGNS, LUMINAIRES, AND TRAFFIC SIGNALS, 6TH EDITION, 2013 USING 90 MPH WIND SPEED AND FATIGUE CATEGORY I.
10. SEE SHEET TE6-3A FOR GROUNDING NOTES.
11. IF THE FOUNDATION IS WITHIN OR PROJECTS INTO A CONCRETE OR ASPHALT SURFACE UTILIZED BY PEDESTRIANS, THE GUIDELINES PROVIDED IN SECTION 658 OF THE STANDARD SPECIFICATIONS SHALL BE FOLLOWED IN REGARDS TO PLACEMENT AND PEDESTAL HEIGHT. OTHERWISE, ALL FACES OF THE FOUNDATION SHALL BE A MINIMUM OF 18 IN. ABOVE GROUND LEVEL. WHEN FOUNDATION IS INSTALLED ON A SLOPE, THE 18 IN. MIN. SHALL BE APPLIED TO THE UPHILL FACE.

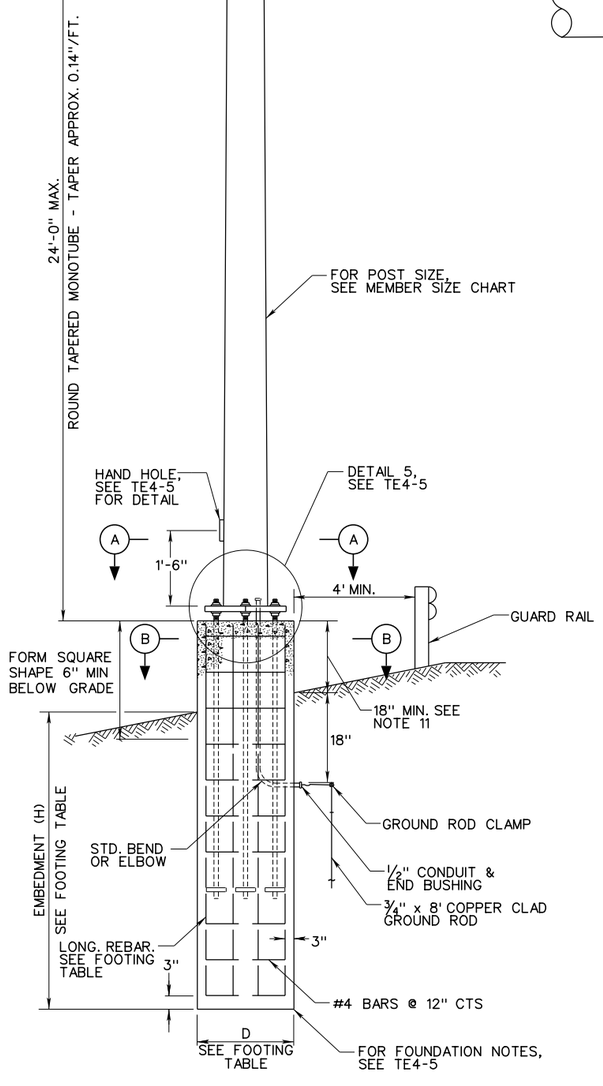

ELEVATION

MEMBER SIZE CHART 2					
DESIGN NUMBER	L (FT.)	ARM A	ARM B	POST	MAX MOMENT 1
SACL-45	45	3 GA. 12 X 22.5'	7 GA. 9.5 X 24.5'	0 GA. 13"	1,540
SACL-55	55	0 GA. 12 X 27.5'	7 GA. 8.8 X 29.5'	2 PLY 7 GA. 16"	1,890
SACL-65	65	0 GA. 13 X 32.5'	7 GA. 9.1 X 34.5'	2 PLY 7 GA. 18"	2,240

BOX CONNECTION TABLE (SEE TE4-5 FOR SECTIONS) 1 3										
DESIGN NUMBER	ARM A SIZE (NPS)	THICKNESS OF ARM END PLATE (A) (IN)	THICKNESS OF BOX FLANGE PLATE (B) (IN)	BOX HEIGHT (HB) (IN)	BOLT SIZE (BD) (IN)	NO. OF BOLTS TOP AND BOTTOM	NO. OF INTERM. ROWS	TOTAL NO. OF BOLTS	W (IN)	X *
SACL-45	12	1¾	1⅝	16	⅞	4	2	12	16	0 IF ARM MTD. > 8' ABOVE BASE
SACL-55	12	2½	1⅝	16	⅞	4	2	12	16	0 IF ARM MTD. > 18.75' ABOVE BASE
SACL-65	13	2½	1⅝	16	1	4	2	12	17	0 IF ARM MTD. > 22.5' ABOVE BASE

FOOTING TABLE (SEE TE4-5 FOR SECTIONS & ANCHOR BOLT DETAIL) 1											
DESIGN NUMBER	POST (NPS)	PLATE DIMENSION					ANCHOR BOLTS		FOOTING		
		S (IN)	F (IN)	T (IN)	B (IN)	HOLE (IN)	NO.	DIA. (IN)	DIAM. (D)	EMBED-MENT (H)	LONG. REBAR
SACL-45	13	31 1/16	15 9/16	2½	20	2⅛	6	1¾	4'-0"	6'-0"	12 - #11
SACL-55	16	34⅝	17 5/16	2½	23	2⅛	6	1¾	4'-0"	6'-0"	12 - #11
SACL-65	18	37	18½	2½	25	2⅛	6	1¾	4'-6"	7'-0"	15 - #11

* THE X DIMENSION WILL VARY DUE TO THE USE OF A TAPERED POST.

X = 0 UNLESS THE DIAMETER OF THE POST AT THE POINT WHERE THE ARM IS TO BE ATTACHED EXCEEDS W-(2"+2"+5/8"+5/8").

X SHOULD NOT EXCEED ¼ POST DIAMETER.

1 ADDED MOMENT ARM CALCULATION, REVISED PLATE HOLE DIAMETER, ADDED W DIMENSION TO TABLE, ADDED CAMBER ANGLE.
2 REVISED ARM SIZES.
3 ADDED BD KEY FOR BOLT SIZE.

WEST VIRGINIA DEPARTMENT OF TRANSPORTATION
DIVISION OF HIGHWAYS
STANDARD DETAIL

PREPARED: 8/2018

REVISION DATE
1 9/2020
2 5/2022
3 8/15/2023

OVERHEAD SIGN SUPPORT-STEEL

SINGLE ARM CANTILEVER (LIGHT)

STANDARD SHEET TE4-4B

TRAFFIC ENGINEERING DIVISION

8/17/2023

Z:\Projects\WVDOT\Standard Details vol II\Final Submittal\Revised DGNs\Revised 8-2023\TE4-4B Rev. 8-15-2023.dgn

J04C02C03-STDBDR c

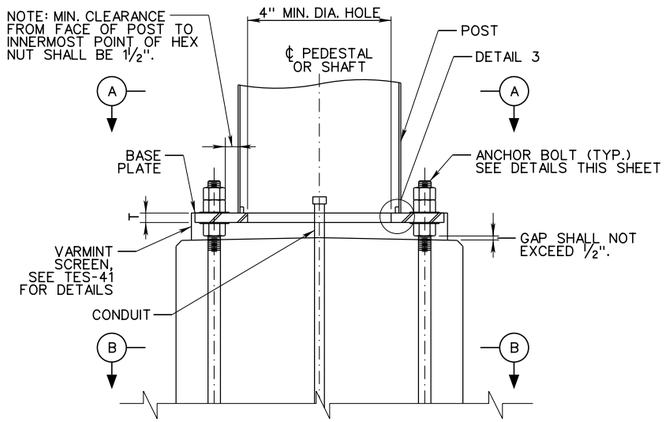

DETAIL 5

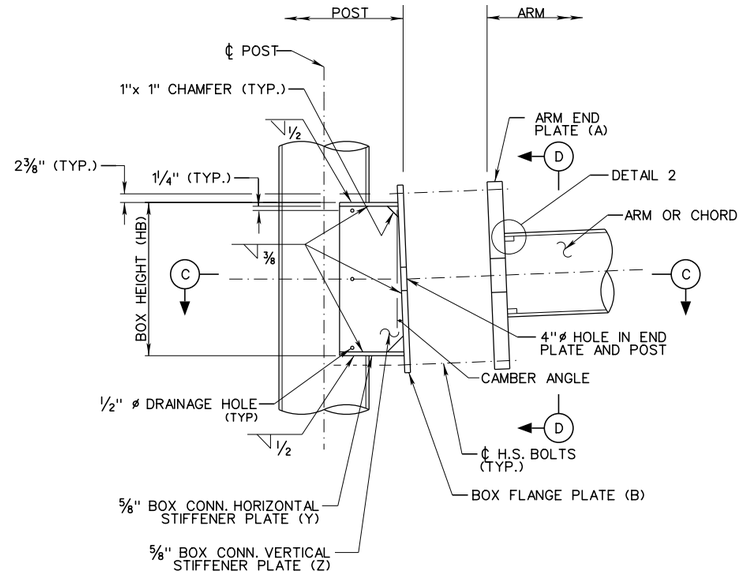

DETAIL 1
(SEE TE4-3A TE4-4A & TE4-4B FOR DIMENSIONS A, B, & HB)

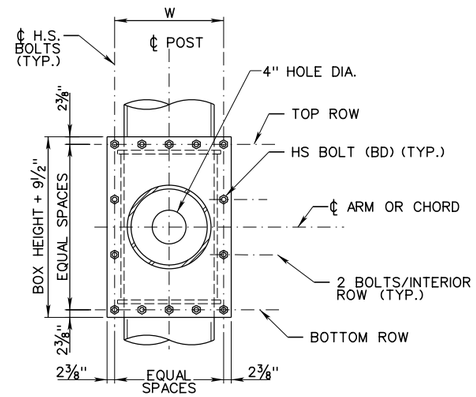

SECTION D-D
NOT TO SCALE

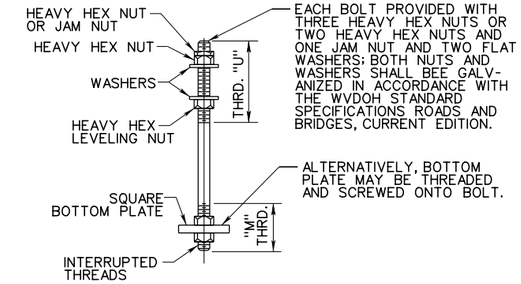

ANCHOR BOLT DETAIL

ANCHOR BOLT CHART			
ANCHOR BOLTS (IN)	BOTTOM PLATE (IN)	"M" (IN)	"U" (IN)
1¼x42	5x5x1½	4½	8
1½x54	6x6x1¾	5¼	9
1¾x84	6¾x6¾x2	6	10
2x90	7¾x7¾x2¼	6¾	11
2¼x96	9x9x2½	7½	12

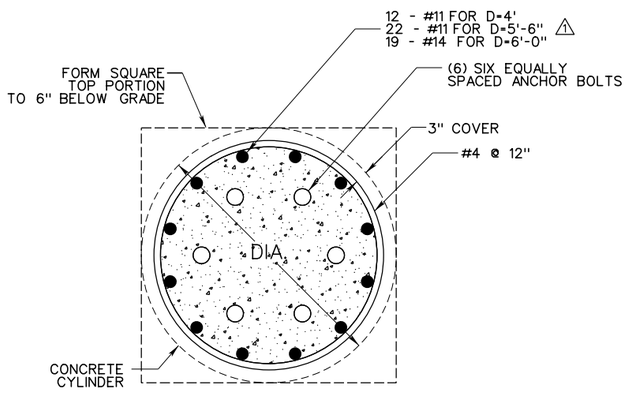

SECTION B-B

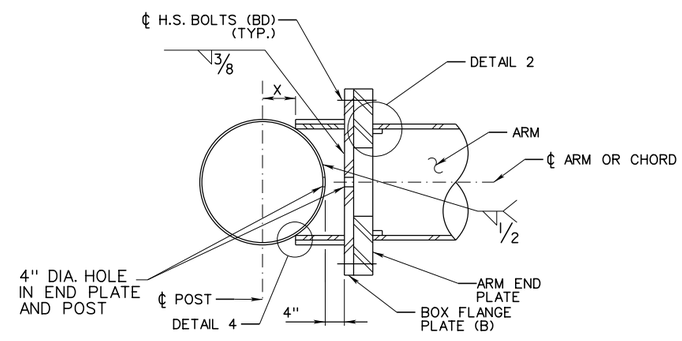

SECTION C-C
NOT TO SCALE

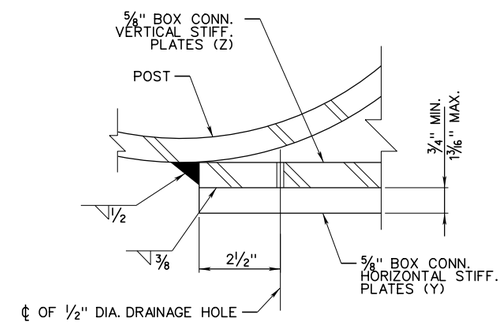

DETAIL 4
NOT TO SCALE

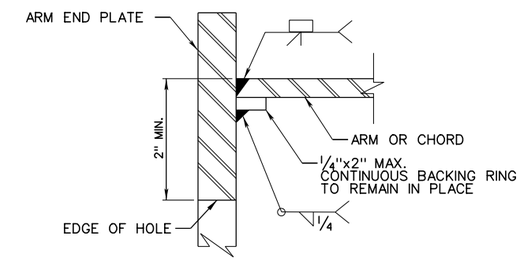

DETAIL 2
NOT TO SCALE

NOTES:

1. BOX CONNECTION ASSEMBLY PROCEDURE:
   A. FIT-UP PLATES B, Y AND Z (TACK WELD).
   B. MAKE ALL FILLET WELDS. SEQUENCE AS REQUIRED TO MINIMIZE DISTORTION.
   C. WELD BOX CONNECTION ASSEMBLY TO POST.
2. ANCHOR BOLTS SHALL CONFORM TO SECTION 658 OF THE SPECIFICATIONS.
3. DETAILS SHOWN ON THIS DRAWING ARE NOT TO SCALE FOR VISUAL CLARITY.
4. GALVANIZE ALL ANCHOR BOLTS AND ASSOCIATED HARDWARE IN THEIR ENTIRETY.

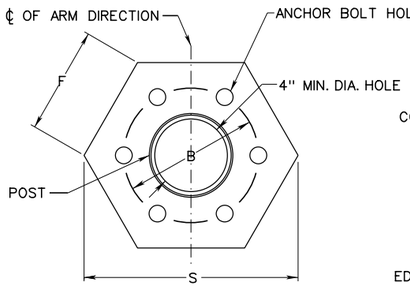

SECTION A-A

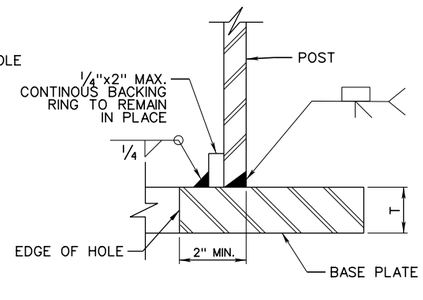

DETAIL 3

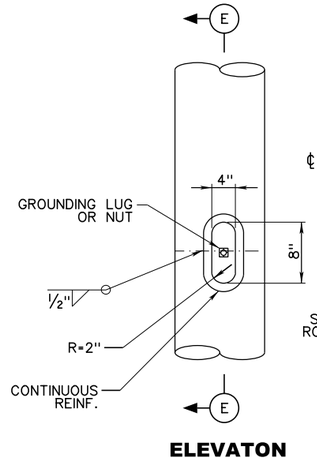

ELEVATON

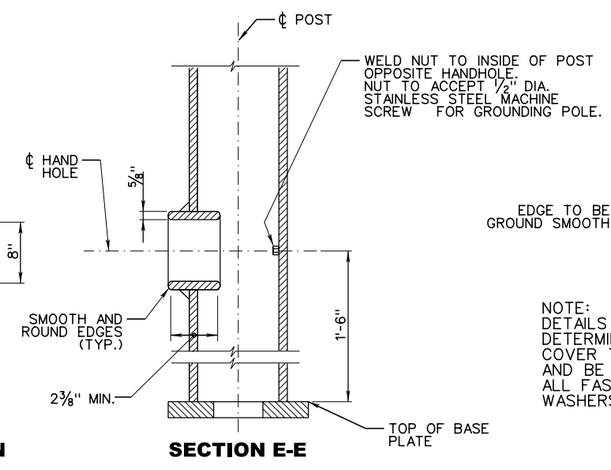

SECTION E-E

POST HANDHOLE DETAIL

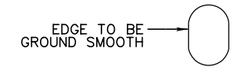

COVER

NOTE:
DETAILS OF THE COVER TO BE DETERMINED BY THE FABRICATOR. COVER TO FIT TIGHTLY,EXCLUDE WATER, AND BE REMOVABLE WITH A WRENCH. ALL FASTENERS, NUTS, AND WASHERS SHALL BE STAINLESS STEEL.

1 REVISED REINFORCING BASED ON FOOTING SIZE CHANGES ON TE4-4A
2 CLARIFIED KEYS FOR PLATES (X,Y,Z) AND BOLT DIAMETER (BD).

WEST VIRGINIA DEPARTMENT OF TRANSPORTATION
DIVISION OF HIGHWAYS
STANDARD DETAIL

PREPARED: 8/2018

REVISION	DATE
1	11/18/2022
2	8/15/2023

OVERHEAD SIGN SUPPORT-STEEL COMMON DETAILS

STANDARD SHEET TE4-5

8/17/2023 Z:\Projects\WVDOT\Standard Details vol II\Final Submittal\Revised DGNs\Revised 8-2023\TE4-5 Rev 8-15-2023.dgn

J04C02C03-STDBOR c

TRAFFIC ENGINEERING DIVISION

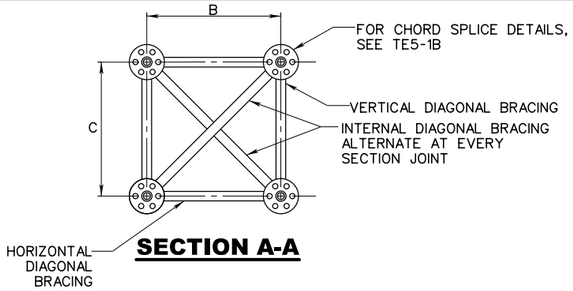

SECTION A-A

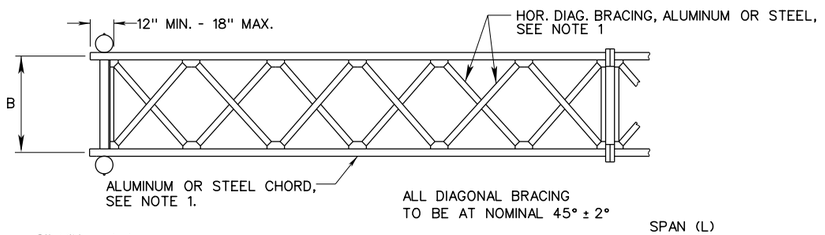

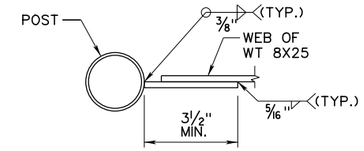

SECTION B-B

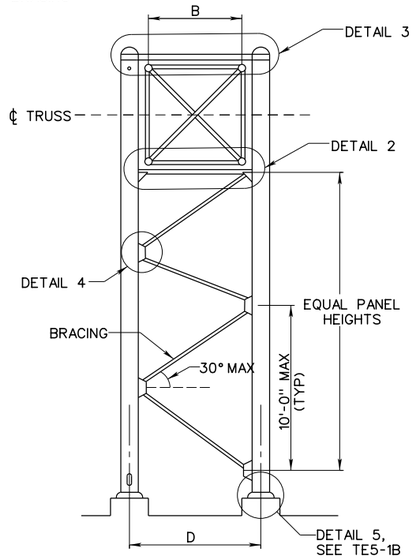

END ELEVATION

NOT TO SCALE

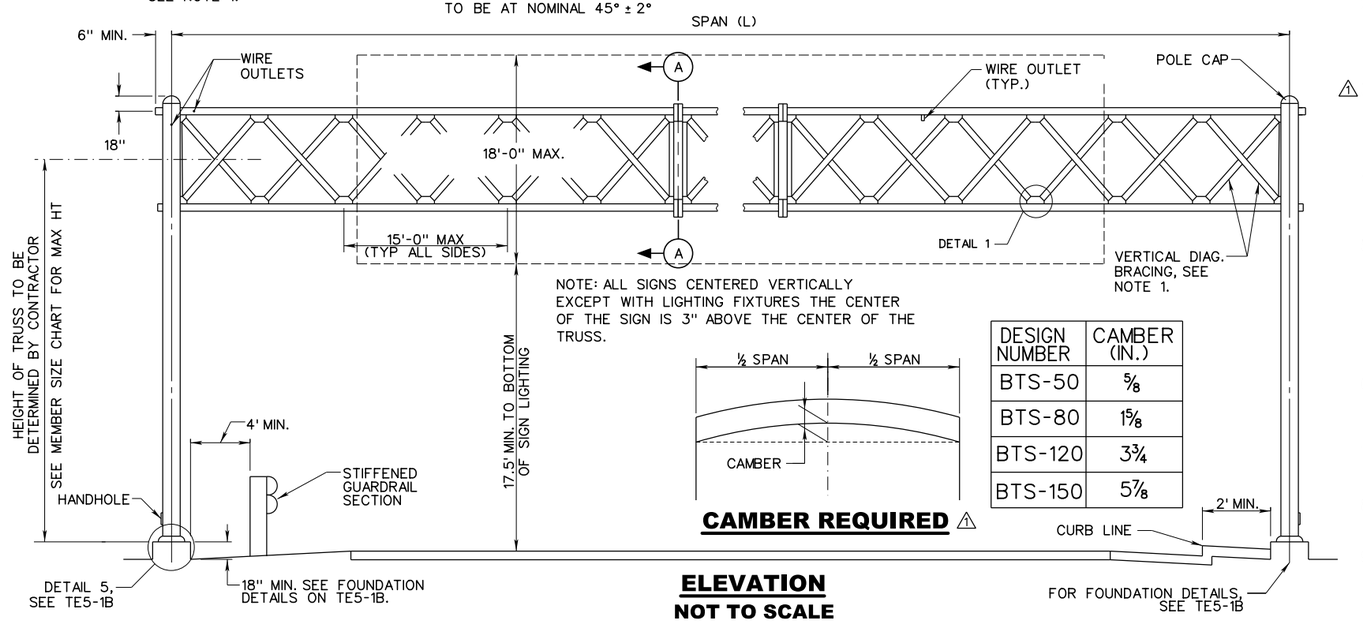

ELEVATION

NOT TO SCALE

CAMBER REQUIRED △1

DESIGN NUMBER	CAMBER (IN.)
BTS-50	5/8
BTS-80	1 5/8
BTS-120	3 3/4
BTS-150	5 7/8

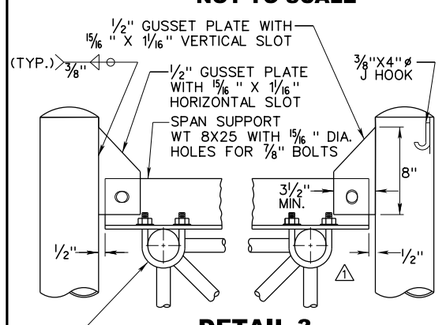

DETAIL 3

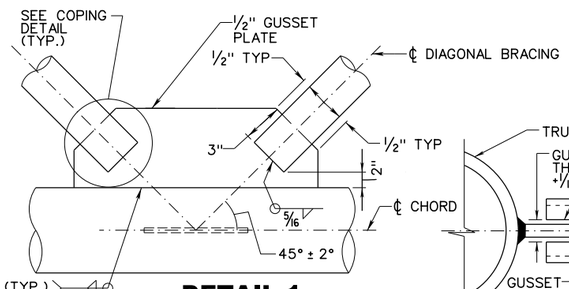

DETAIL 1

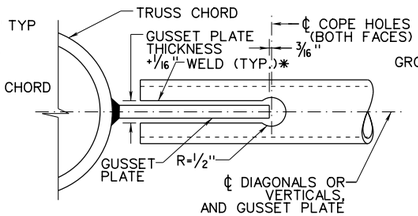

COPING DETAIL

* PROVIDE A WELD 'HOLDBACK' AT THE EDGE OF THE GUSSET PLATE IN THE BRACING MEMBERS EQUAL TO THE WELD SIZE REQUIRED.

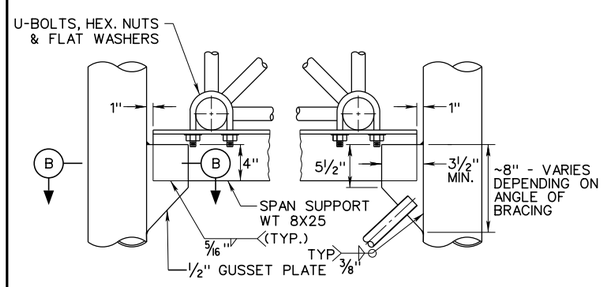

DETAIL 2

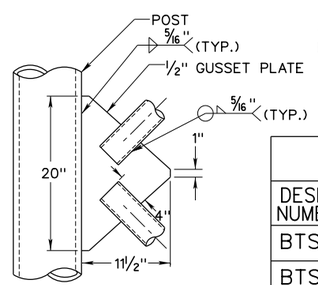

DETAIL 4

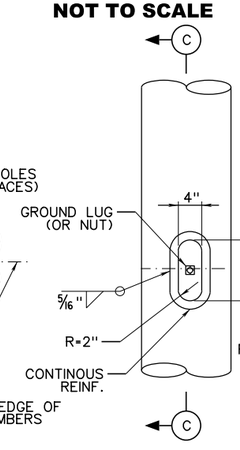

ELEVATION VIEW

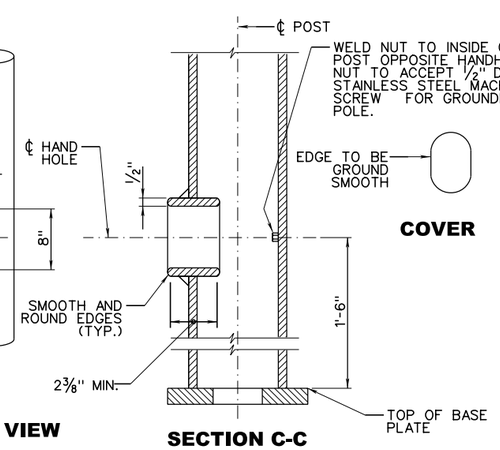

COVER

SECTION C-C

HANDHOLE DETAILS

MEMBER SIZE CHART △2△3									CHORD BOX TRUSS	POST AND BRACING	
DESIGN NUMBER	SPAN LENGTH L (FT)	B (FT)	C (FT)	D (FT)	MAX HT (FT)	MAX SIGN AREA (SF)	CHORD	U BOLT DIAMETER (IN)	BRACING	POST	BRACING
BTS-50	50	5	5	8	28	800	5SCH80	1/2	2.5SCH40	10SCH60	4SCH40
BTS-80	80	6	6	9	28.5	1050	6SCH80	5/8	3SCH40	10SCH60	4SCH40
BTS-120	120	9	6.5	12	29.5	1480	8SCH60	5/8	3SCH40	12SCHXH	4SCH80
BTS-150	150	9	6.5	12	29.5	1480	10SCH60	5/8	3SCH80	12SCH80	5SCH80

NOTES:

1. FOR SPAN LENGTHS 120 FT OR LESS, THE OVERHEAD SPAN TRUSS SHALL BE ALUMINUM ROUND STRAIGHT TUBES. FOR ALUMINUM TRUSS SPAN, A 31 LB ALUMINUM STOCKBRIDGE DAMPER SHALL BE INSTALLED NEAR THE SPAN CENTER. FOR SPAN LENGTHS MORE THAN 120 FT, UP TO 150 FT, THE OVERHEAD SPAN TRUSS SHALL BE STEEL ROUND TUBES. POSTS FOR ALL SPANS SHALL BE STEEL ROUND TUBES. THE STEEL TUBES, INCLUDING HARDWARE, SHALL BE IN ACCORDANCE WITH THE SPECIFICATIONS, UNLESS OTHERWISE NOTED.
2. DESIGN IS IN ACCORDANCE WITH AASHTO STANDARD SPECIFICATIONS FOR STRUCTURAL SUPPORTS FOR HIGHWAY SIGNS, LUMINAIRES, AND TRAFFIC SIGNALS, 6TH EDITION, 2013 USING 90 MPH WIND SPEED AND FATIGUE CATEGORY I.
3. △1 MAXIMUM LENGTH OF SPAN SECTION SHALL BE PER MANUFACTURER'S DISCRETION TO MAXIMIZE USE OF MATERIALS. THE STEEL SPAN TRUSS AND POST TRUSS SHALL BE HOT-DIP GALVANIZED.
4. FOR OVERHEAD SPAN MOUNTED ON BRIDGES, THE OVERHEAD TRUSS SHALL BE STEEL ROUND STRAIGHT TUBES, REGARDLESS OF SPAN LENGTHS.
5. CAMBER SHALL BE OBTAINED BY INCREASING THE TOP CHORD LENGTHS AND DECREASING THE BOTTOM CHORD LENGTHS AS SHOWN, CHORD ENDS AND SPLICE PLATES SHALL BE PREPARED TO THE PROPER ANGLE BEFORE SPLICE PLATES ARE WELDED TO THE CHORDS. ALTERNATIVELY THE CAMBER CAN BE BUILT UNIFORMLY INTO THE TRUSS.
6. THE TOPS OF FOUNDATIONS SHALL BE CONSTRUCTED SO THAT THE 17.5 FT. CLEARANCE IS MAINTAINED OVER THE ENTIRE WIDTH OF THE PAVEMENT AND SHOULDERS.
7. FOR GROUNDING DETAILS SEE TE6-3A. GROUNDING ALWAYS REQUIRED, REGARDLESS IF SIGN LIGHTING REQUIRED OR NOT.
8. FOR SIGN BRACKETS AND/OR SIGN LIGHTING DETAILS, SEE TE6-3D.
9. WIRE OUTLETS: ONE THREADED STEEL 1 1/4 IN. PIPE COUPLING OR SHORT NIPPLE SHALL BE WELDED TO THE REAR POLE OF EACH END FRAME. THREADED ALUMINUM OR STEEL, AS APPROPRIATE, 1 1/4 IN. PIPE COUPLINGS OR SHORT NIPPLES SHALL BE WELDED TO THE FRONT TOP CHORD OF TRUSS APPROXIMATELY 12 IN. OUTBOARD OF THE FIRST SIGN BRACKET AND AT OTHER LOCATIONS AS PORTRAYED ON TE6-3A FOR EACH SIGN. ALL SHARP EDGES INSIDE THE POLES, CHORDS AND PIPES OR COUPLINGS SHALL BE REMOVED.
10. TRUSS SPAN FLANGE CONNECTION BOLTS SHALL CONFORM TO THE REQUIREMENTS OF THE STANDARD SPECIFICATIONS. GALVANIZED STEEL SHALL BE USED FOR STEEL SPANS AND STAINLESS STEEL SHALL BE USED FOR ALUMINUM SPANS. BOLTS SHALL BE TIGHTENED IN ACCORDANCE WITH THE SPECIFICATIONS.
11. DETAILS OF THE HANDHOLE COVER TO BE DETERMINED BY THE FABRICATOR TO FIT TIGHTLY, EXCLUDE WATER, AND BE REMOVABLE WITH A WRENCH. ALL FASTENERS, NUTS, AND WASHERS SHALL BE STAINLESS STEEL.
12. IF THE FOUNDATION IS WITHIN OR PROJECTS INTO A CONCRETE OR ASPHALT SURFACE UTILIZED BY PEDESTRIANS, THE GUIDELINES PROVIDED IN SECTION 658 OF THE STANDARD SPECIFICATIONS SHALL BE FOLLOWED IN REGARDS TO PLACEMENT AND PEDESTAL HEIGHT.

△3 REVISED BTS-120 POST MEMBER SIZE
△2 REVISED CHORD MEMBER SIZES, DELETED WELD
△1 ADDED CAMBER INFORMATION, REVISED MAX SPAN SECTION LENGTH

WEST VIRGINIA DEPARTMENT OF TRANSPORTATION
DIVISION OF HIGHWAYS
STANDARD DETAIL

PREPARED: 8/2018

REVISION	DATE
△1	6/2022
△2	12/19/2022
△3	8/15/2023

OVERHEAD SIGN SUPPORT BOX TRUSS SPAN

STANDARD SHEET TE5-1A

TRAFFIC ENGINEERING DIVISION

8/17/2023

Z:\Projects\WVDOT\Standard Details vol II\Final Submittal\Revised DGNs\Revised 8-2023\TE5-1A Rev 8-15-2023.dgn

J04C02C03-STDBOR c

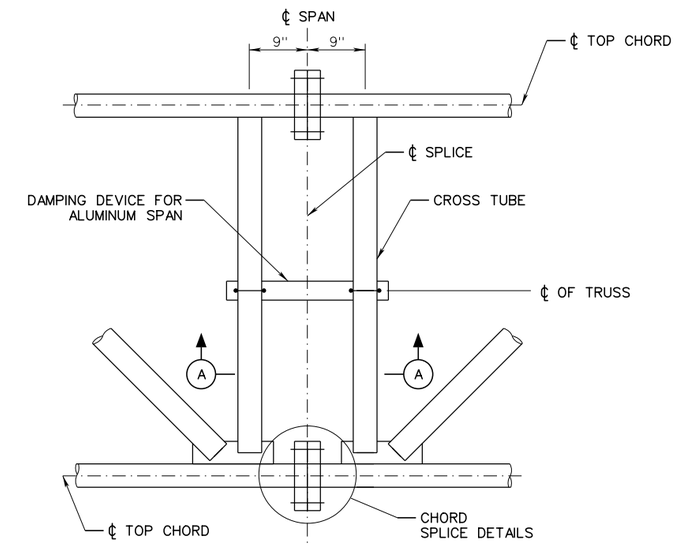

PLAN

FOR TRUSS DAMPING DEVICE (50', 80', & 120' SPANS)

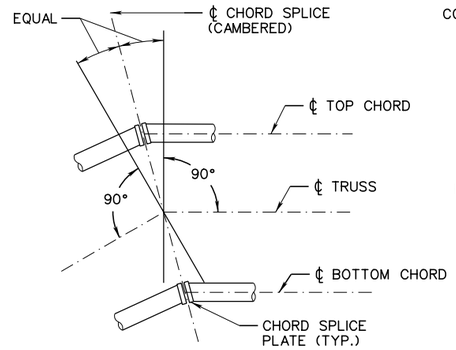

CAMBER DETAIL

(SEE TE5-1A, NOTE 5)

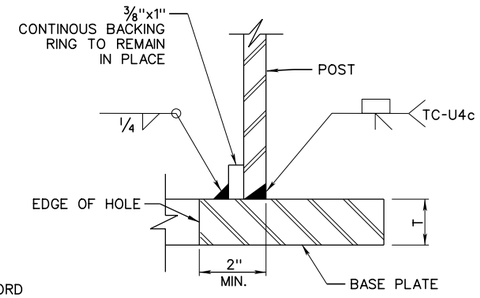

DETAIL 6

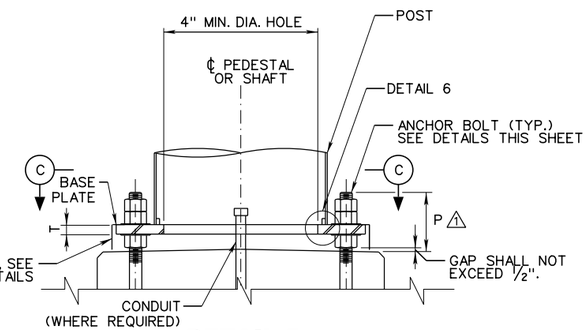

DETAIL 5

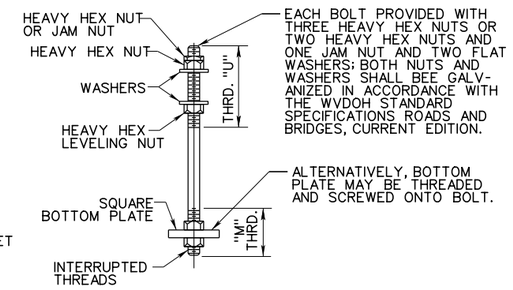

ANCHOR BOLT DETAIL

ANCHOR BOLT CHART			
ANCHOR BOLTS (IN)	BOTTOM PLATE (IN)	"M" (IN)	"U" (IN)
1 1/4x42	5x5x1 1/2	4 1/2	8
1 1/2x54	6x6x1 3/4	5 1/4	9

CHORD SPLICE TABLE △2 △3							
CHORD NPS	PLATE			BOLTS		FILLET WELD	
	A	B	C	NUMBER	DIA.	a	b
5SCH80	1'-1"	10"	1 1/2"	6	7/8"	3/8"	1/4"
6SCH80	1'-1 1/2"	10 1/4"	1 1/2"	6	7/8"	3/8"	1/4"
8SCH60	1'-2 1/2"	11 1/2"	1 3/4"	8	7/8"	3/8"	1/4"
10SCH60	1'-4 3/4"	1'-1 1/2"	2 1/4"	8	7/8"	3/8"	1/4"

BASE PLATE TABLE △2								
POST (NPS)	PLATE (IN)				ANCHOR BOLTS			FOOTING DEPTH
	F	T	E	HOLE DIA (IN.)	NUMBER	SIZE DIA.	P △1	
10	17.0	2 1/4	13.0	1 5/8"	4	1 1/4"	7"	9'-6"
12	18.0	2 1/2	14.0	1 7/8"	4	1 1/2"	8"	10'-10"

△1 REINFORCEMENT SCHEDULE (FOR EACH FOUNDATION)			
MARK	NO	LENGTH	TYPE
401	12"C/C-#4	9'-2"	401
402	12"C/C-#4	9'-6"	402
403	2-#4	D+4'-6"	403
404	8-#4	2'-6"	STR.
604	4-#6	D+2'-0"	604
801	28-#8	VARIES	STR.

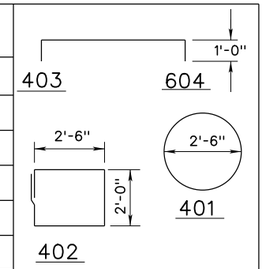

NOTES:

1. DEPTH OF FOUNDATION IS BASED ON AN ASSUMED SOIL SUCH AS MEDIUM CLAY OR SAND CLAY PROVIDING AN UNCONFINED COMPRESSIVE STRENGTH NOT LESS THAN 2500 LBS/FT. THESE FOUNDATIONS MAY BE USED IN COHESIONLESS TYPE SOILS PROVIDED THAT THE FRICTION ANGLE IS NOT LESS THAN 30 DEGREES.
2. HI-STRENGTH BOLTS SHALL CONFORM TO THE REQUIREMENTS OF THE SPECIFICATIONS. TIGHTEN ALL HIGH STRENGTH BOLTS IN ACCORDANCE WITH THE SPECIFICATIONS.
3. ANCHOR BOLTS SHALL CONFORM TO SECTION 658 OF THE SPECIFICATIONS.
4. DETAILS ON THIS DRAWING ARE NOT TO SCALE FOR VISUAL CLARITY.
5. GALVANIZE ANCHOR BOLTS AND ASSOCIATED HARDWARE IN THEIR ENTIRETY.
6. SEE TE6-3A FOR GROUNDING NOTES.
7. IF THE FOUNDATION IS WITHIN OR PROJECTS INTO A CONCRETE OR ASPHALT SURFACE UTILIZED BY PEDESTRIANS, THE GUIDELINES PROVIDED IN SECTION 658 OF THE STANDARD SPECIFICATIONS SHALL BE FOLLOWED IN REGARDS TO PLACEMENT AND PEDESTAL HEIGHT. OTHERWISE, ALL FACES OF THE FOUNDATION SHALL BE A MINIMUM OF 18 IN. ABOVE GROUND LEVEL. WHEN FOUNDATION IS INSTALLED ON A SLOPE, THE 18 IN. MIN. SHALL BE APPLIED TO THE UPHILL FACE.

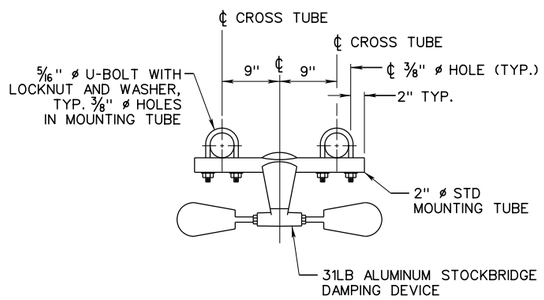

SECTION A-A

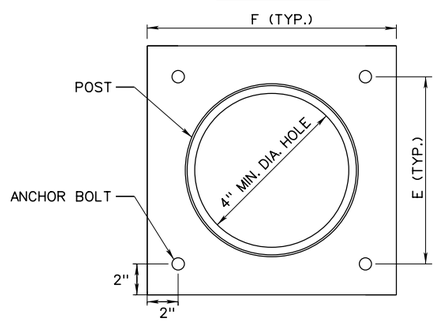

SECTION C-C

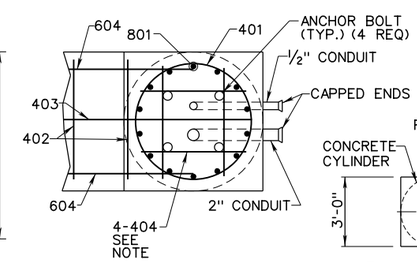

△1 DETAIL 8

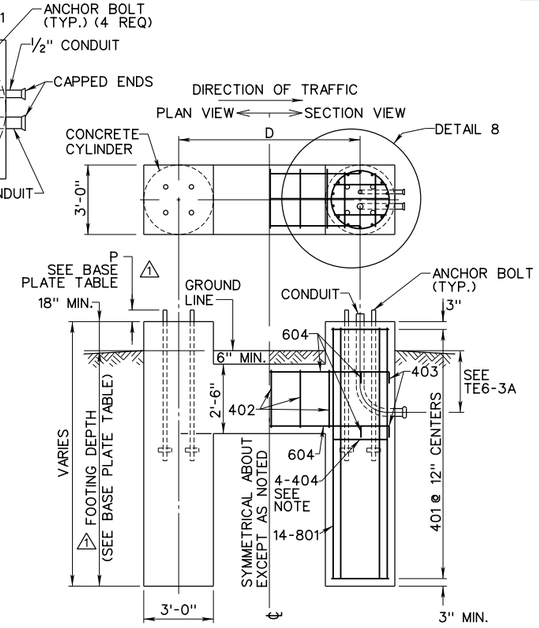

NOTE: TIE ANCHOR BOLTS TO REBAR CAGE NEAR BOTTOM OF ANCHOR BOLTS.

FOUNDATION DETAIL △1

(RIGHT HAND SHOWN - LEFT HAND OPPOSITE)

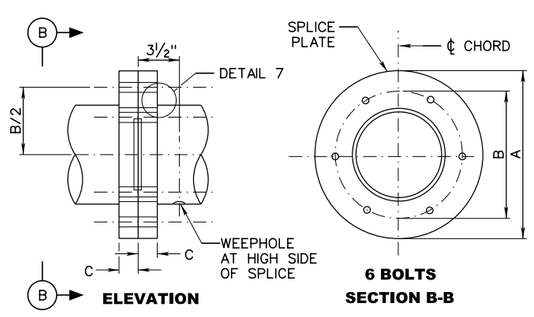

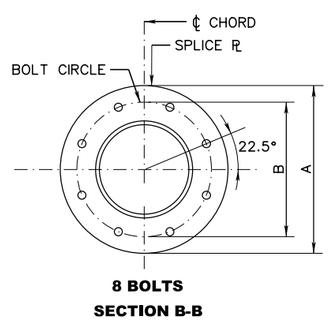

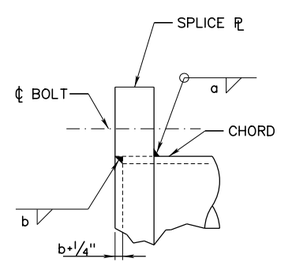

DETAIL 7

CHORD SPLICE DETAILS

△3 REVISED CHORD SPLICE TABLE

△2 REVISED CHORD SPLICE TABLE AND BASE PLATE TABLE.

△1 REVISED FOUNDATION REINFORCEMENT; ADDED DETAIL 8; REVISED BOLT PROJECTION; AND FOOTING DEPTH DIM.

WEST VIRGINIA DEPARTMENT OF TRANSPORTATION
DIVISION OF HIGHWAYS
STANDARD DETAIL

PREPARED: 8/2018

REVISION DATE
△1 2/28/2022
△2 12/19/2022
△3 8/15/2023

OVERHEAD SIGN SUPPORT BOX TRUSS SPAN

STANDARD SHEET TE5-1B

TRAFFIC ENGINEERING DIVISION

8/17/2023

Z:\Projects\WVDOT\Standard Details vol II\Final Submittal\Revised DGNs\Revised 8-2023\TE5-1B Rev. 8-15-2023.dgn

J04C02C03-STDBOR c

NOTES:

1. DETAILS OF THIS SHEET SHALL APPLY TO EACH OVERHEAD SIGN STRUCTURE THAT SUPPORTS EXTERNALLY ILLUMINATED SIGNS (WHEN SIGN LIGHTING PART OF ROADWAY LIGHTING SEE TEL-06).

2. WHERE SPECIAL SIGN MOUNTS, FABRICATED FROM STRUCTURAL STEEL, ARE USED TO ATTACH SIGNS AND SIGN LIGHTING TO THE SUPERSTRUCTURE, PARAPET WALLS, OR PLATE GIRDERS OF ROADWAY BRIDGES OVERPASSING THE SIGNED ROUTE, THE PHOTOELECTRIC CONTROL UNIT SHALL BE INSTALLED AS INDICATED ON THE PLANS.

3. FOR ADDITIONAL DETAILS APPLICABLE TO SIGN LIGHTING REFER TO STANDARD SHEET TE6-3B, TE6-3C, AND TE6-3D.

4. GROUNDING:
   - A. THE CONTRACTOR IS TO ENGAGE A QUALIFIED TESTING AND INSPECTION AGENCY TO PERFORM FIELD TESTS AND INSPECTIONS.
   - B. AFTER INSTALLING GROUNDING SYSTEM BUT BEFORE PERMANENT ELECTRICAL CIRCUITS HAVE BEEN ENERGIZED, TEST FOR COMPLIANCE WITH THE FOLLOWING REQUIREMENTS.
   - C. TEST COMPLETED GROUNDING SYSTEM AT EACH POLE AND AT SERVICE DISCONNECT ENCLOSURE.
   - D. MEASURE GROUND RESISTANCE NOT LESS THAN TWO FULL DAYS AFTER THE LAST TRACE OF PRECIPITATION AND WITHOUT SOIL BEING MOISTENED BY ANY MEANS OTHER THAN NATURAL DRAINAGE OR SEEPAGE AND WITHOUT CHEMICAL TREATMENT OR OTHER ARTIFICIAL MEANS OF REDUCING NATURAL GROUND RESISTANCE.
   - E. PERFORM THE TEST BY THE FALL-OF-POTENTIAL METHOD ACCORDING TO IEEE STANDARD 81.
   - F. INSTALL ADDITIONAL GROUND RODS AS REQUIRED UNTIL MEASURED GROUND RESISTANCE IS 25 OHMS OR LESS.
   - G. GROUND RODS ARE TO BE DRIVEN TO A DEPTH OF 2 INCHES BELOW FINISHED GRADE TO TOP OF ROD AND SEPARATED BY A MINIMUM DISTANCE OF 8 FEET.
   - H. INTERCONNECT GROUND RODS WITH A #2 AWG BARE, STRANDED COPPER CONDUCTOR BURIED AT 18 INCHES BELOW GRADE.

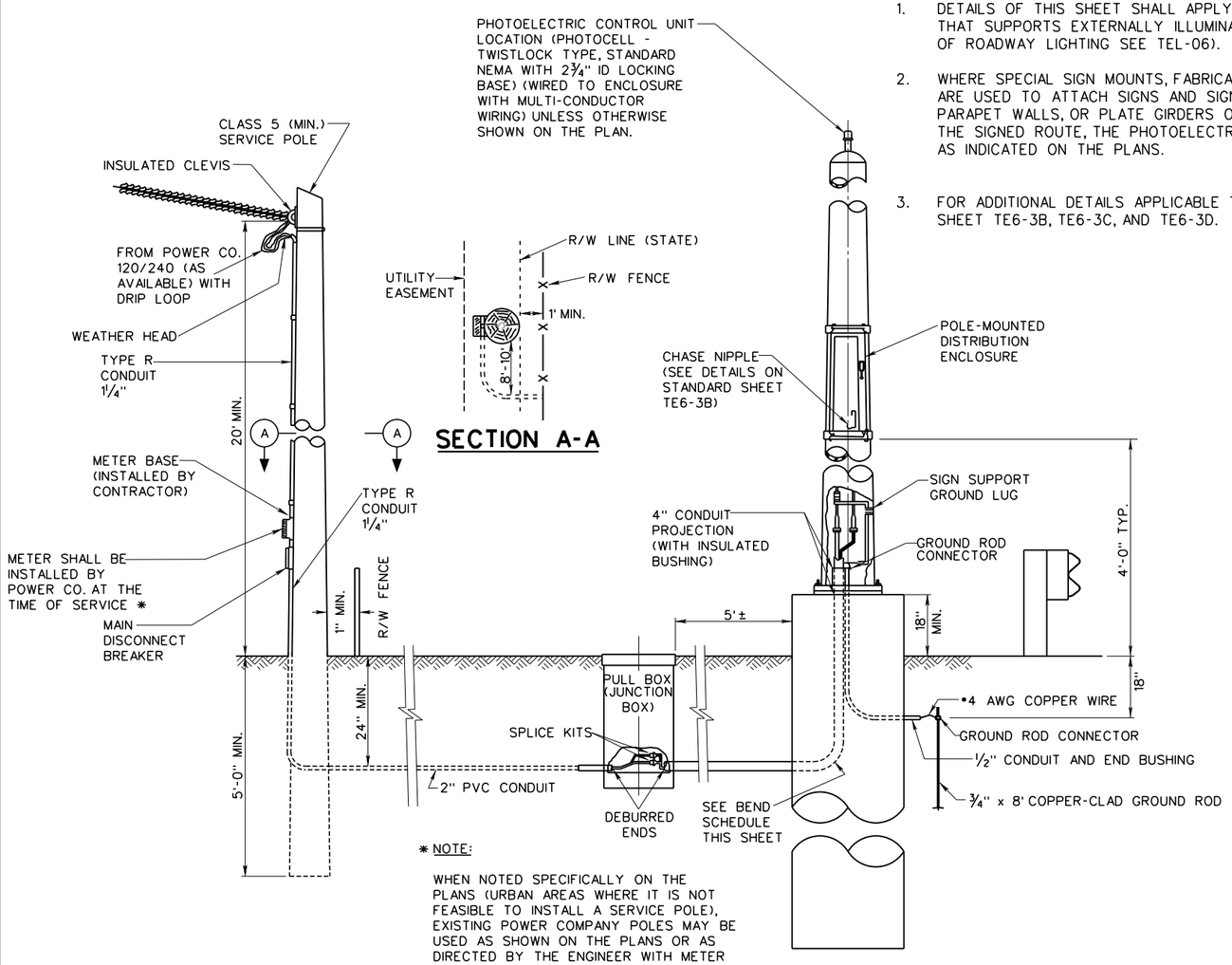

* NOTE:

WHEN NOTED SPECIFICALLY ON THE PLANS (URBAN AREAS WHERE IT IS NOT FEASIBLE TO INSTALL A SERVICE POLE), EXISTING POWER COMPANY POLES MAY BE USED AS SHOWN ON THE PLANS OR AS DIRECTED BY THE ENGINEER WITH METER BASE, METER, AND MAIN DISCONNECT CO-LOCATED WITH POLE-MOUNTED ENCLOSURE (90° OPPOSITE).

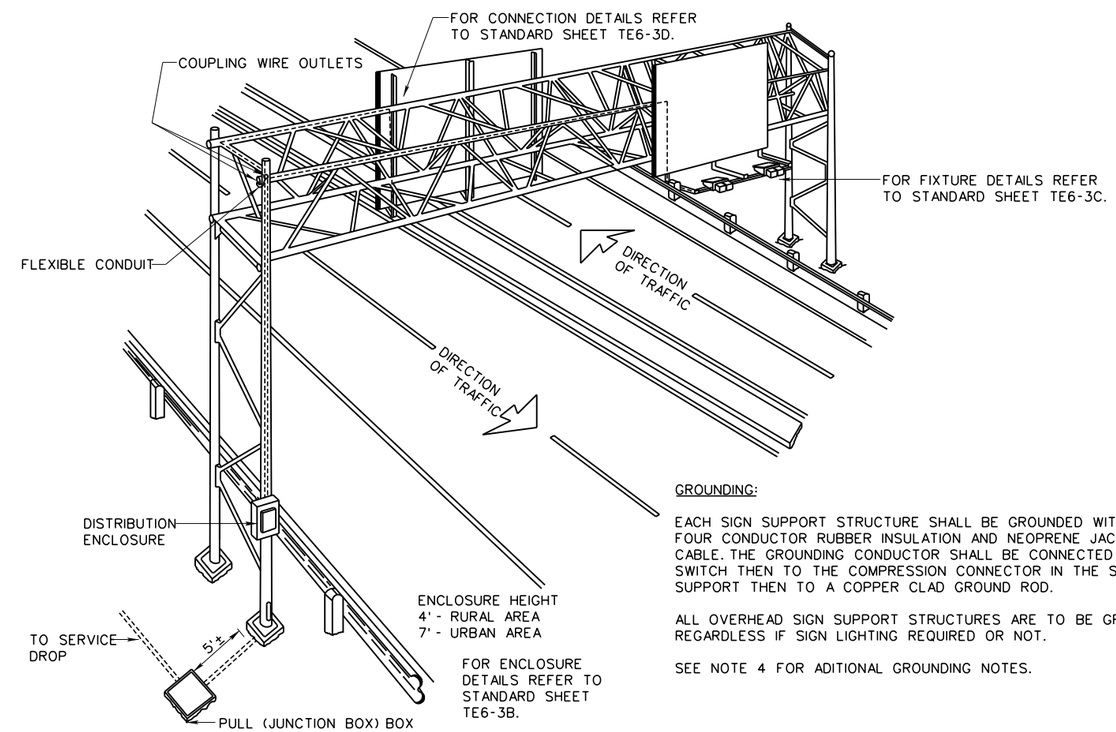

GROUNDING:

EACH SIGN SUPPORT STRUCTURE SHALL BE GROUNDED WITH A FOUR CONDUCTOR RUBBER INSULATION AND NEOPRENE JACKETED CABLE. THE GROUNDING CONDUCTOR SHALL BE CONNECTED TO THE SWITCH THEN TO THE COMPRESSION CONNECTOR IN THE SIGN SUPPORT THEN TO A COPPER CLAD GROUND ROD.

ALL OVERHEAD SIGN SUPPORT STRUCTURES ARE TO BE GROUNDED REGARDLESS IF SIGN LIGHTING REQUIRED OR NOT.

SEE NOTE 4 FOR ADITIONAL GROUNDING NOTES.

TYPICAL TRUSS - MOUNTED SERVICE

CONDUIT BEND SCHEDULE

R = BENDING RADIUS
S = STRAIGHT SECTION
Y = R + S

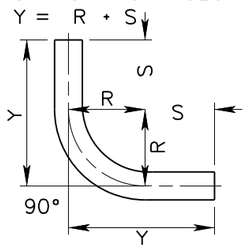

2" TYPE R			2½" TYPE R		
R	S	Y	R	S	Y
24"	11"	36"	24"	11"	36"
30"	11"	42"	30"	11"	42"
36"	11"	48"	36"	11"	48"
42"	12"	54"	42"	12"	54"
48"	12"	60"	48"	12"	60"

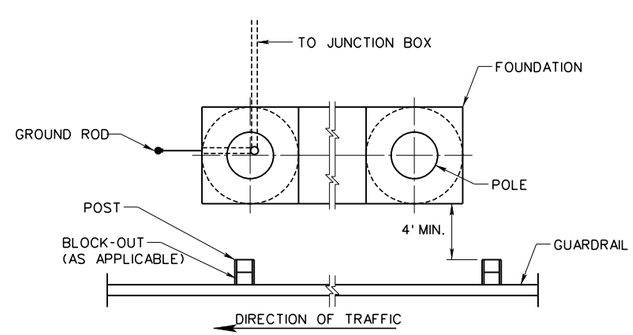

PLAN VIEW

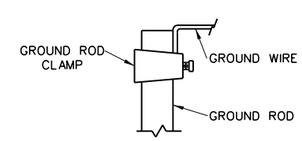

GROUND ROD CONNECTOR

WEST VIRGINIA DEPARTMENT OF TRANSPORTATION
DIVISION OF HIGHWAYS
STANDARD DETAIL

PREPARED: 8/2018
REVISION DATE

SIGN LIGHTING SERVICE

STANDARD SHEET TE6-3A

TRAFFIC ENGINEERING DIVISION

12/19/2018

Z:\Projects\WVDOT\Standard Details vol II\New_Sheets\Signing\TE6-3A.dgn

J04C02C03-STDBOR c

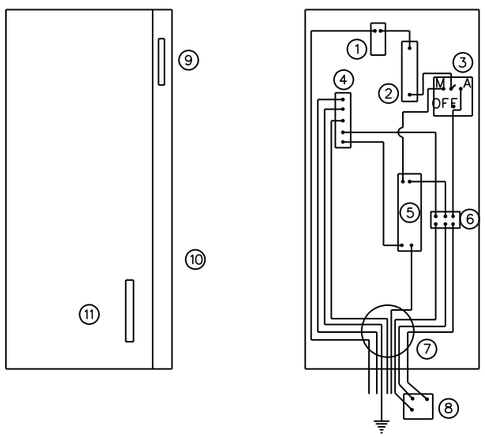

120 OR 240 VOLT DISTRIBUTION ENCLOSURE WIRING DIAGRAM

(120 VOLT SYSTEM SHOWN)

✱ WHEN USED ON WOOD POLE, APPROPRIATE CONDUIT HUBS SHALL BE INSTALLED ON BOTTOM AS NECESSARY TO FOLLOW CONDUIT ON POLE.

LEGEND

1. BARRIER TYPE TERMINAL BLOCK
2. MAIN CIRCUIT BREAKER
3. MANUAL-OFF-AUTOMATIC SELECTOR SWITCH
4. SOLID NEUTRAL GROUNDED
5. 120 VOLT CONTACTOR
6. P.E. UNIT TERMINAL STRIP
7. CHASE NIPPLE ✱
8. 120 VOLT P.E. UNIT (PHOTOCELL-TWISTLOCK TYPE, STANDARD NEMA WITH 2¾" ID LOCKING BASE)
9. LOCKABLE SAFETY SWITCH
10. 28"H X 14"W X 8¾" NEMA 4X S.S. ENCLOSURE
11. ENCLOSURE DOOR INTERLOCK

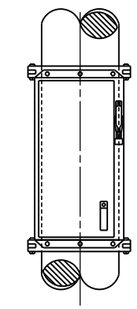

FRONT VIEW

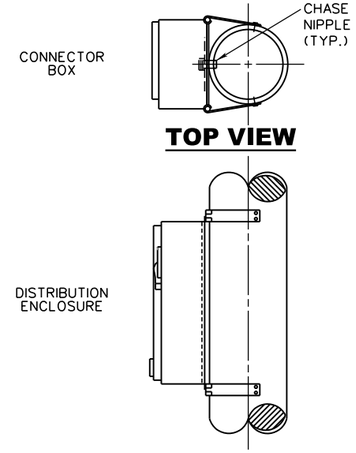

TOP VIEW

SIDE VIEW

DISTRIBUTION ENCLOSURE:

1. THE ENCLOSURE SHALL CONFORM TO THE REQUIREMENTS OF SECTION 659.2.9 OF THE SPECIFICATIONS.
2. SPACE FOR AN INSULATED CHASE NIPPLE SHALL BE PROVIDED APPROXIMATELY 2¼ IN. ABOVE THE CENTER LINE OF THE LOWER MOUNTING SLOT.
3. THIS ENCLOSURE AND STRUCTURE SHALL BE SHOP DRILLED AND TAPPED FOR THE REQUIRED NIPPLE AS SHOWN ON THE DETAIL ON THIS SHEET.
4. THIS ENCLOSURE SHALL BE FLANGE MOUNTED ON BRACKETS WHICH ARE ATTACHED TO POLE AS SHOWN ON THIS SHEET ON THE MOUNTING BRACKET DETAIL.

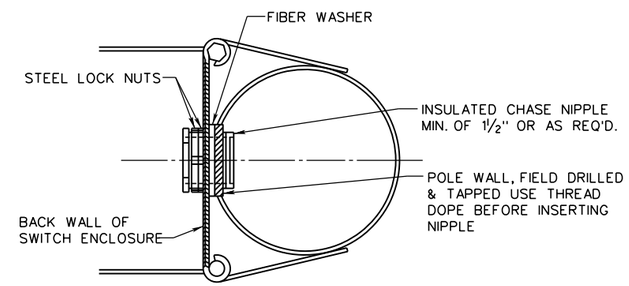

CHASE NIPPLE WIRE INLET DETAIL

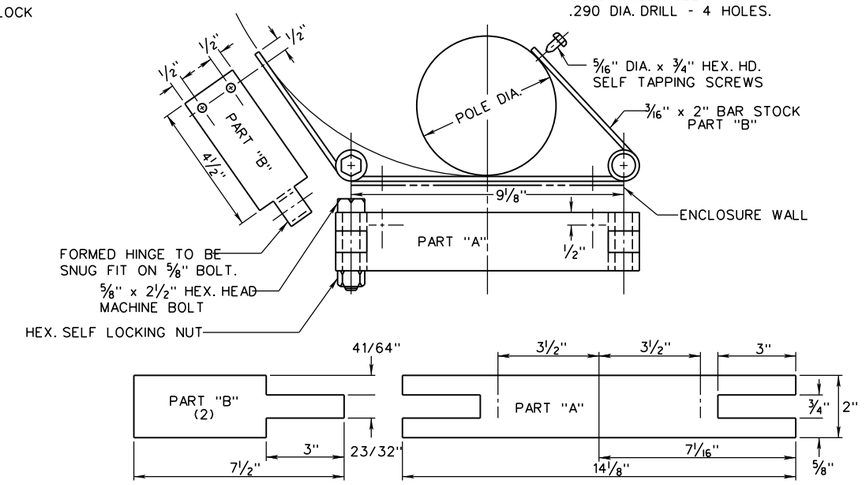

ENCLOSURE MOUNTING BRACKET

THE ENCLOSURE MOUNTING BRACKET MAY BE FABRICATED FROM EITHER GALVANIZED STEEL OR ALUMINUM. THE BRACKET SHALL BE FIELD MOUNTED WITH 5/16 IN. HEX HEAD SCREWS (SELF-TAPPING FOR ATTACHING TO STEEL OR ALUM.). STEEL NUTS, BOLTS, AND SCREWS SHALL BE CADMIUM PLATED. ALUMINUM NUTS, BOLTS, AND SCREWS SHALL HAVE AN ANODIC COATING AT LEAST 0.0002 INCH IN THICKNESS AND SHALL BE CHROMATE SEALED.

DETAILS ON THIS SHEET FOR USE WITH SEPARATE LIGHTING POWER SOURCE. SEE TEL-06 FOR DETAILS WHEN SIGN LIGHTING IS INCLUDED WITH ROADWAY LIGHTING CIRCUITS.

WEST VIRGINIA DEPARTMENT OF TRANSPORTATION
DIVISION OF HIGHWAYS
STANDARD DETAIL

PREPARED: 8/2018

REVISION DATE

SIGN LIGHTING ENCLOSURES

STANDARD SHEET TE6-3B

TRAFFIC ENGINEERING DIVISION

J04C02C03-STDBDR c
12/19/2018
Z:\Projects\WV001\Standard Details vol II\New_Sheets\Signing\TE6-3B.dgn

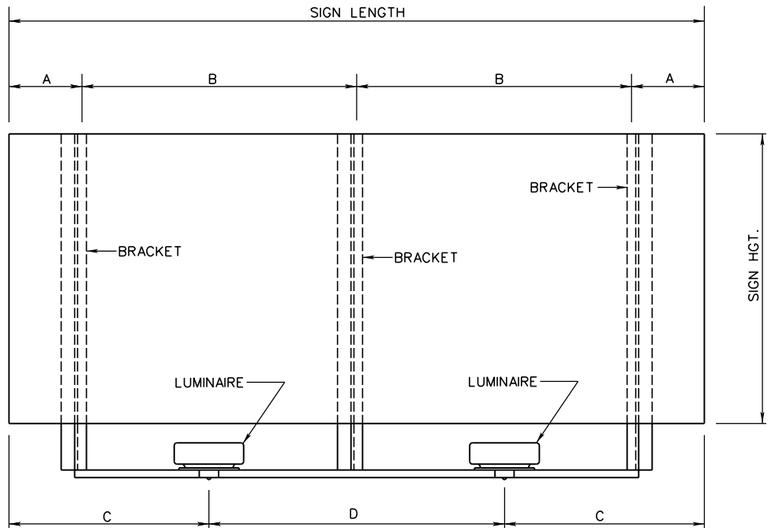

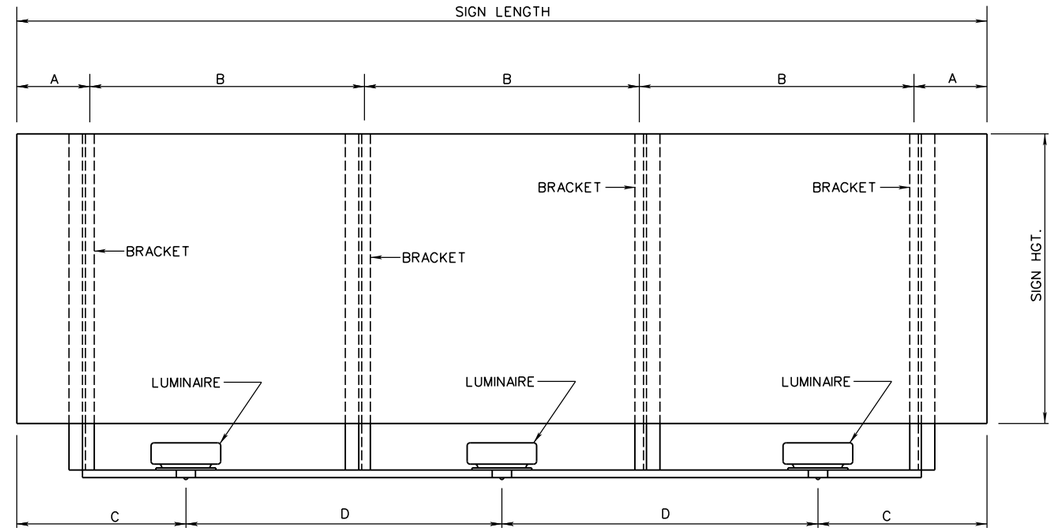

BRACKET AND LUMINAIRE SPACING CHART

SIGN LENGTH	QUANTITY OF SIGN BRACKETS	BRACKET SPACING		QUANTITY OF LUMINAIRES	LUMINAIRE SPACING	
		A	B		C	D
4'-0"	2	1'-0"	2'-0"	1	2'-0"	
4'-6"	2	1'-1"	2'-4"	1	2'-3"	
5'-0"	2	1'-3"	2'-6"	1	2'-6"	
5'-6"	2	1'-4"	2'-10"	1	2'-9"	
6'-0"	2	1'-6"	3'-0"	1	3'-0"	
6'-6"	2	1'-7"	3'-4"	1	3'-3"	
7'-0"	2	1'-9"	3'-6"	1	3'-6"	
7'-6"	2	1'-10"	3'-10"	1	3'-9"	
8'-0"	2	2'-0"	4'-0"	1	4'-0"	
8'-6"	2	2'-1"	4'-4"	1	4'-3"	
9'-0"	2	2'-3"	4'-6"	1	4'-6"	
9'-6"	2	2'-4"	4'-10"	1	4'-9"	
10'-0"	2	2'-6"	5'-0"	1	5'-0"	
10'-6"	3	1'-9"	3'-6"	2	2'-9"	5'-0"
11'-0"	3	1'-10"	3'-8"	2	3'-0"	5'-0"
11'-6"	3	1'-11"	3'-10"	2	3'-3"	5'-0"
12'-0"	3	2'-0"	4'-0"	2	3'-6"	5'-0"
12'-6"	3	2'-1"	4'-2"	2	3'-9"	5'-0"
13'-0"	3	2'-2"	4'-4"	2	4'-0"	5'-0"
13'-6"	3	2'-3"	4'-6"	2	4'-3"	5'-0"
14'-0"	3	2'-4"	4'-8"	2	4'-6"	5'-0"
14'-6"	3	2'-5"	4'-10"	2	4'-9"	5'-0"

SIGN LENGTH	QUANTITY OF SIGN BRACKETS	BRACKET SPACING		QUANTITY OF LUMINAIRES	LUMINAIRE SPACING	
		A	B		C	D
15'-0"	3	2'-6"	5'-0"	2	5'-0"	5'-0"
15'-6"	3	2'-6"	5'-3"	2	3'-3"	9'-0"
16'-0"	3	2'-6"	5'-6"	2	3'-6"	9'-0"
16'-6"	3	2'-6"	5'-9"	2	3'-9"	9'-0"
17'-0"	3	2'-6"	6'-0"	2	4'-0"	9'-0"
17'-6"	3	2'-6"	6'-3"	2	4'-3"	9'-0"
18'-0"	3	2'-6"	6'-6"	2	4'-6"	9'-0"
18'-6"	3	2'-6"	6'-9"	2	4'-9"	9'-0"
19'-0"	4	2'-0"	5'-0"	2	5'-0"	9'-0"
19'-6"	4	2'-0"	5'-2"	2	5'-3"	9'-0"
20'-0"	4	2'-0"	5'-4"	2	5'-6"	9'-0"
20'-6"	4	0'-9"	6'-4"	3	1'-3"	9'-0"
21'-0"	4	1'-0"	6'-4"	3	1'-6"	9'-0"
21'-6"	4	1'-3"	6'-4"	3	1'-9"	9'-0"
22'-0"	4	1'-6"	6'-4"	3	2'-0"	9'-0"
22'-6"	4	1'-9"	6'-4"	3	2'-3"	9'-0"
23'-0"	4	2'-0"	6'-4"	3	2'-6"	9'-0"
23'-6"	4	2'-3"	6'-4"	3	2'-9"	9'-0"
24'-0"	4	2'-6"	6'-4"	3	3'-0"	9'-0"
24'-6"	4	2'-6"	6'-6"	3	3'-3"	9'-0"
25'-0"	4	2'-6"	6'-8"	3	3'-6"	9'-0"
25'-6"	4	2'-6"	6'-10"	3	3'-9"	9'-0"

SIGN LENGTH	QUANTITY OF SIGN BRACKETS	BRACKET SPACING		QUANTITY OF LUMINAIRES	LUMINAIRE SPACING	
		A	B		C	D
26'-0"	4	2'-6"	7'-0"	3	4'-0"	9'-0"
26'-6"	4	2'-6"	7'-2"	3	4'-3"	9'-0"
27'-0"	4	2'-6"	7'-4"	3	4'-6"	9'-0"
27'-6"	4	2'-6"	7'-6"	3	4'-9"	9'-0"
28'-0"	4	2'-6"	7'-8"	3	5'-0"	9'-0"
28'-6"	5	2'-3"	6'-0"	3	5'-3"	9'-0"
29'-0"	5	2'-0"	6'-3"	3	5'-6"	9'-0"
29'-6"	5	0'-9"	7'-0"	4	1'-3"	9'-0"
30'-0"	5	1'-0"	7'-0"	4	1'-6"	9'-0"
30'-6"	5	1'-1"	7'-1"	4	1'-9"	9'-0"
31'-0"	5	1'-2"	7'-1"	4	2'-0"	9'-0"
31'-6"	5	1'-5"	7'-2"	4	2'-3"	9'-0"
32'-0"	5	1'-6"	7'-3"	4	2'-6"	9'-0"
32'-6"	5	1'-7"	7'-4"	4	2'-9"	9'-0"
33'-0"	5	1'-10"	7'-4"	4	3'-0"	9'-0"
33'-6"	5	1'-11"	7'-5"	4	3'-3"	9'-0"
34'-0"	5	2'-0"	7'-6"	4	3'-6"	9'-0"
34'-6"	5	2'-1"	7'-7"	4	3'-9"	9'-0"
35'-0"	5	2'-4"	7'-7"	4	4'-0"	9'-0"
35'-6"	5	2'-5"	7'-8"	4	4'-3"	9'-0"
36'-0"	5	2'-6"	7'-9"	4	4'-6"	9'-0"

NOTE:

BRACKET SPACING A AND B MAY BE ADJUSTED AS NEEDED WHERE THE INTENDED BRACKET LOCATION CONFLICTS WITH A STRUCTURAL ELEMENT OF THE TRUSS SUCH AS CHORD SPLICES OR BRACING GUSSET PLATES.

THE A DIMENSION SHALL BE AT LEAST 6 INCHES BUT SHALL NOT EXCEED 2 FT 6 INCHES.

THE B DIMENSION SHALL NOT EXCEED 7 FT 9 INCHES.

IN CASES WHERE THESE PARAMETERS CANNOT BE MET, AN ADDITIONAL BRACKET SHALL BE INSTALLED.

WEST VIRGINIA DEPARTMENT OF TRANSPORTATION
DIVISION OF HIGHWAYS
STANDARD DETAIL

PREPARED: 8/2018

REVISION DATE

SIGN LIGHTING

BRACKET AND LUMINAIRE SPACING

STANDARD SHEET TE6-3C

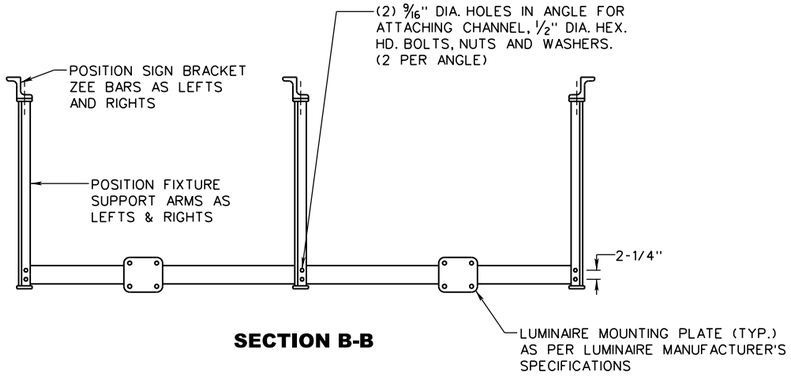

SECTION B-B

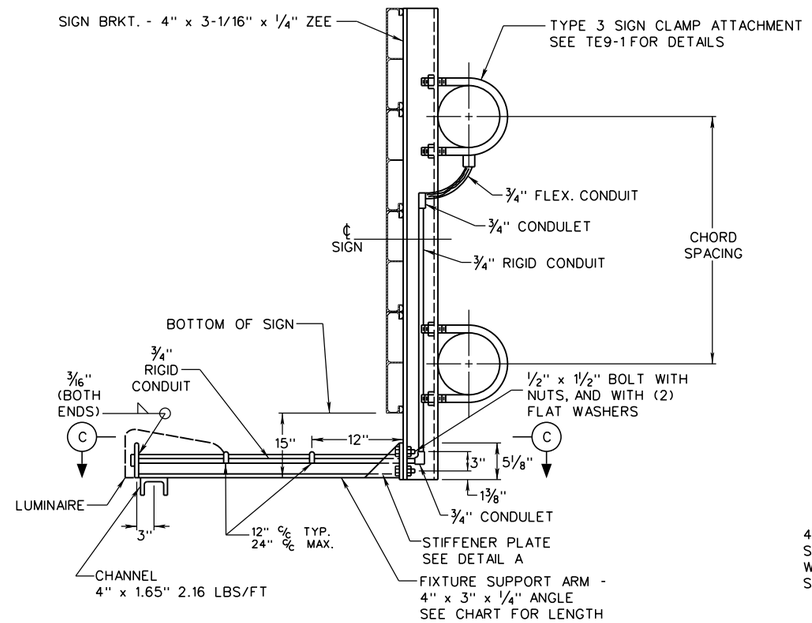

SECTION A-A

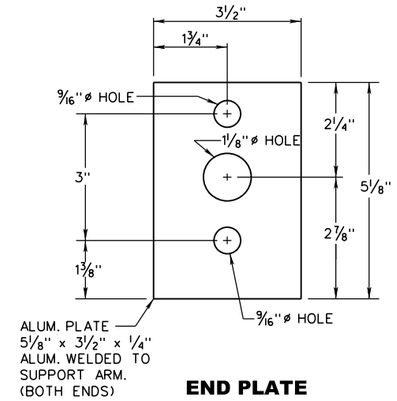

END PLATE

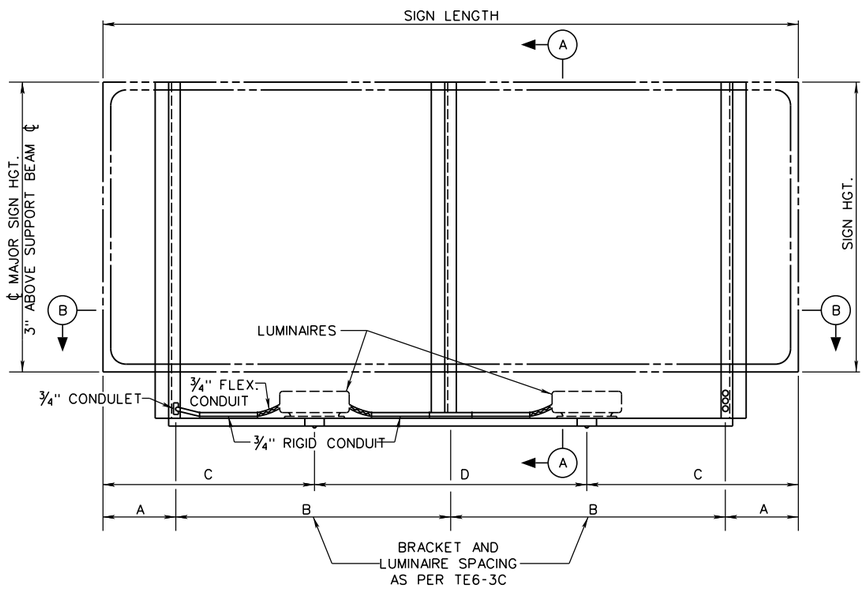

SIGN LIGHTING DETAIL

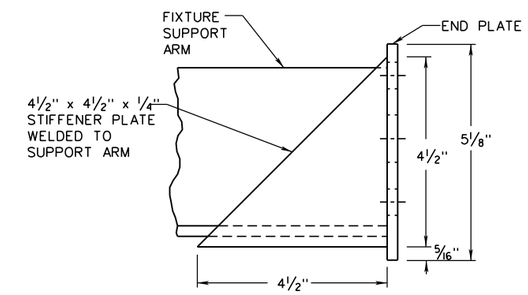

DETAIL A

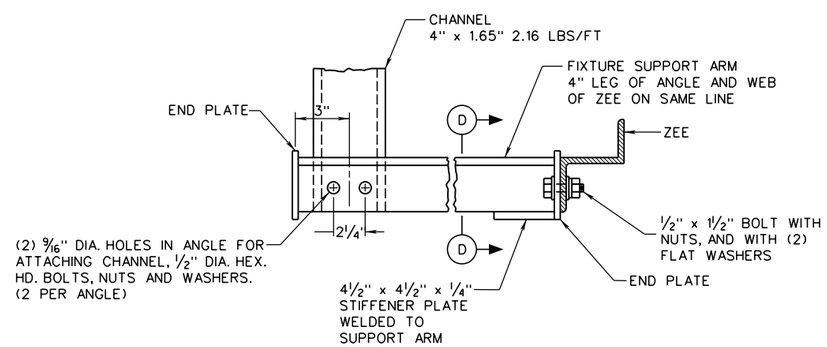

SECTION C-C

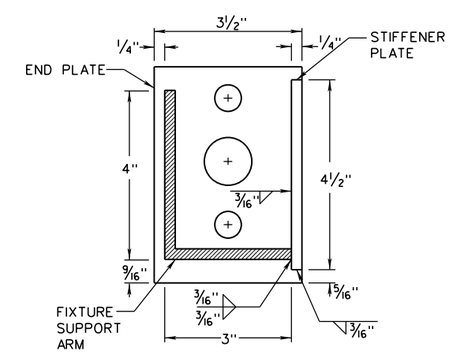

SECTION D-D

TOTAL SIGN HEIGHT	FIXTURE SUPPORT ARM LENGTH
3'-0" TO 5'-0"	2'-9"
5'-6" TO 6'-6"	3'-3"
7'-0" TO 10'-0"	4'-3"
10'-6" TO 14'-0"	5'-9"
14'-6" TO 18'-0"	7'-6"

SIGN BRACKET DETAILS

WEST VIRGINIA DEPARTMENT OF TRANSPORTATION
DIVISION OF HIGHWAYS
STANDARD DETAIL

PREPARED: 8/2018
REVISION DATE

SIGN LIGHTING MOUNTING

STANDARD SHEET TE6-3D

TRAFFIC ENGINEERING DIVISION

12/19/2018

Z:\Projects\WVDOT\Standard Details vol II\New_Sheets\Signing\TE6-3D.dgn

J04C02C03-STDBOR.c

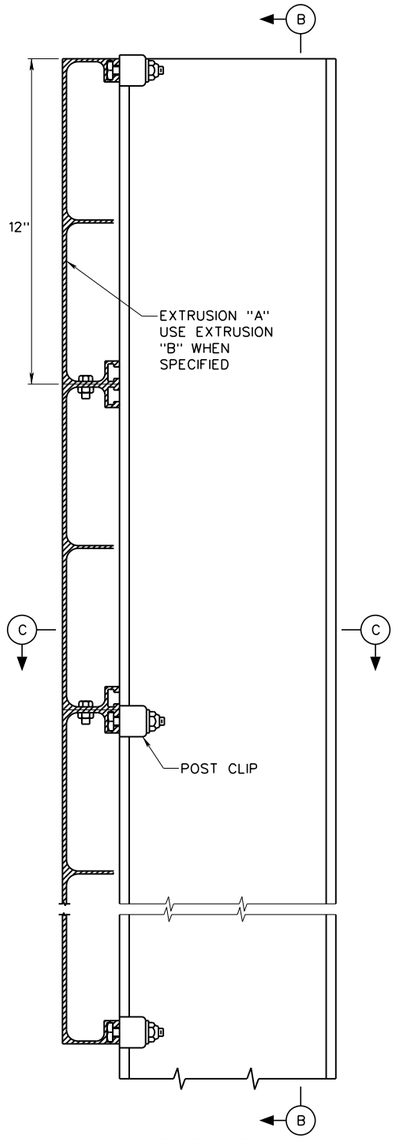

SECTION A-A

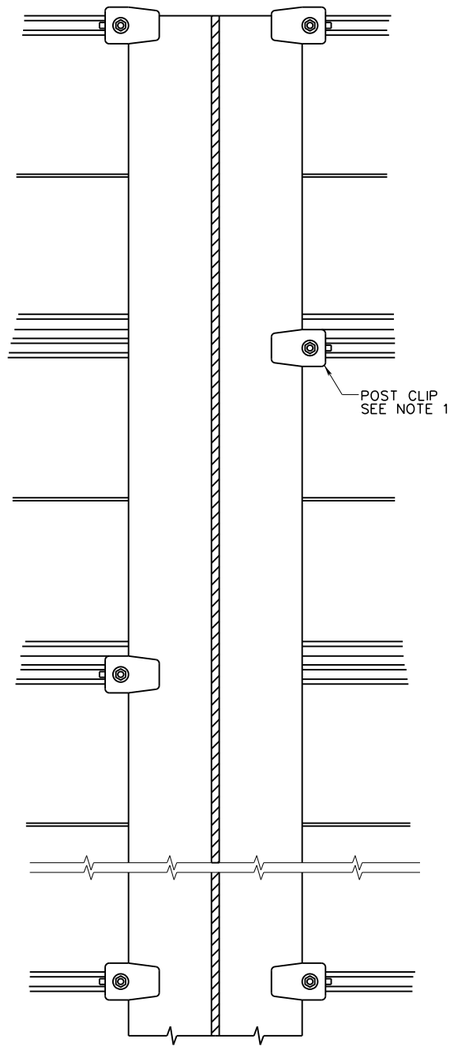

SECTION B-B

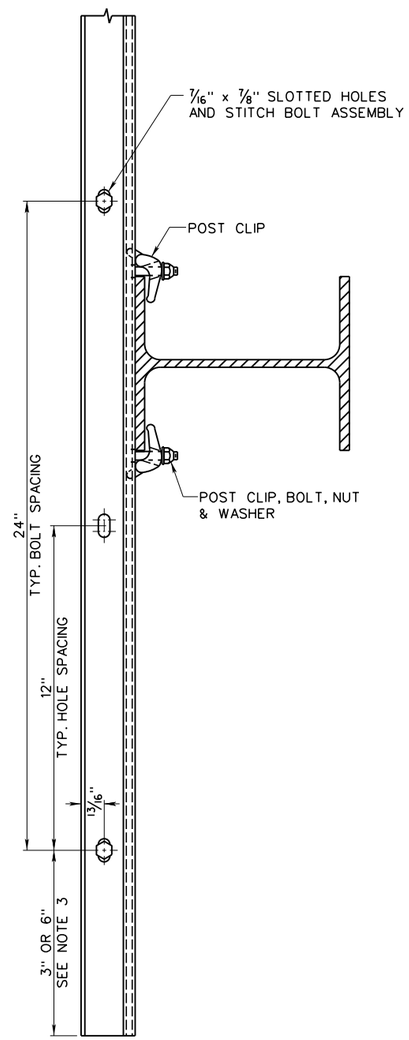

SECTION C-C

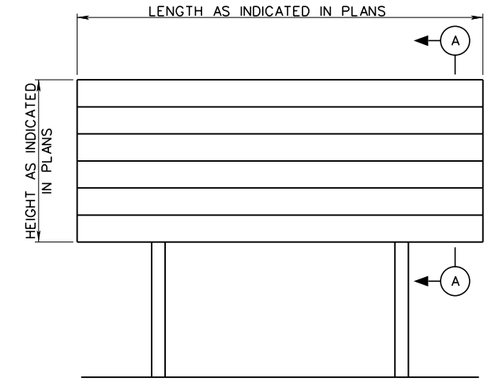

NOTES:

1. ALL SIGNS SHALL BE DOUBLE CLIPPED AT EACH POST AT TOP AND BOTTOM OF OVERALL SIGN PANEL. FOR SIGNS UP TO 24 FT. LONG, INTERIOR CLIPS MAY BE PLACED ON ALTERNATING SIDES OF SUPPORT AT EACH SEAM (AS SHOWN IN SECTION B-B). FOR SIGNS OVER 24 FT. LONG, INTERIOR CLIPS SHALL BE PLACED ON BOTH SIDES OF SUPPORT AT EACH SEAM.
2. SLOTTED HOLES FOR STITCHING PANELS TOGETHER SHALL BE PROVIDED AT 12 IN. SPACING.
3. THE DISTANCE BETWEEN THE ENDS OF THE PANEL AND THE FIRST HOLE SHALL BE THE SAME - 6 IN. FOR SIGNS WITH A LENGTH TO AN EVEN FOOT; 3 IN. FOR SIGNS WITH A LENGTH TO A HALF FOOT. EXIT PANELS ARE AN EXCEPTION. SEE TE8-1 FOR DETAILS.
4. SUPPORTS SHOULD NOT EXTEND ABOVE THE SIGN.
5. EXTRUDED PANEL SIGNS MAY BE MOUNTED ON A MAXIMUM OF TWO (2) BACK TO BACK U-CHANNEL SUPPORTS PROVIDED THAT THE ADDITIONAL GUIDELINES PROVIDED ON SHEET TE1-7 ARE MET. EXTRUDED PANEL SIGNS MAY NOT OTHERWISE BE MOUNTED ON U-CHANNEL WITH THE EXCEPTION OF TYPE A PARAPET MOUNT SUPPORTS.
6. CORNERS OF EXTRUDED PANELS SHALL NOT BE ROUNDED.
7. EXTRUSION "B" SHALL ALWAYS BE ON TOP AND SHALL BE ORIENTED SO THAT THE POST CLIP CHANNEL IS AT THE TOP.
8. FOR ATTACHMENT OF EXTRUDED PANEL SIGNS TO OVERHEAD SIGN STRUCTURES, THE GUIDELINES SPECIFIED ABOVE SHALL BE FOLLOWED IF THE STRUCTURE VERTICAL SUPPORTS ARE BEAM TYPE SUPPORTS. IF THE VERTICAL SUPPORTS ARE ZEE BARS AS DETAILED ON TE6-3C, A POST CLIP SHALL BE USED ALONG ZEE BAR AT EACH SEAM.

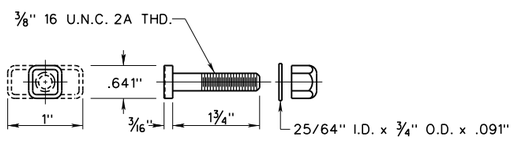

POST CLIP BOLT, NUT AND WASHER

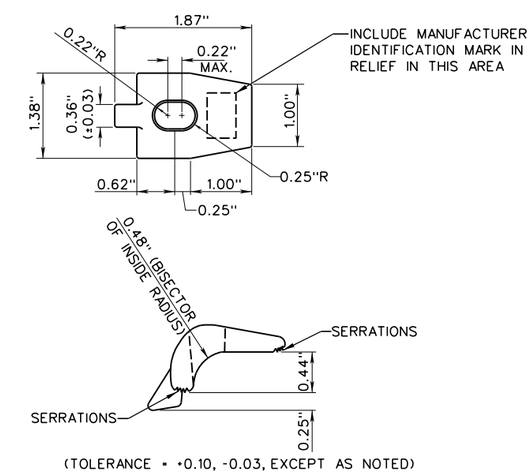

POST CLIP

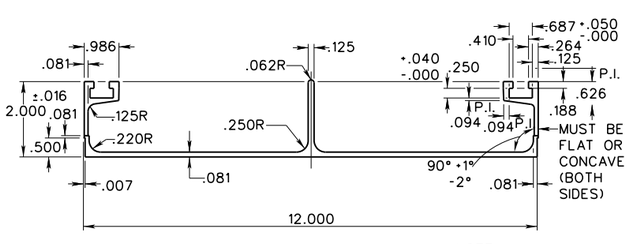

EXTRUSION "A"

NOTE:
.031R ON ALL INSIDE & OUTSIDE CORNERS UNLESS SPECIFIED OTHERWISE.

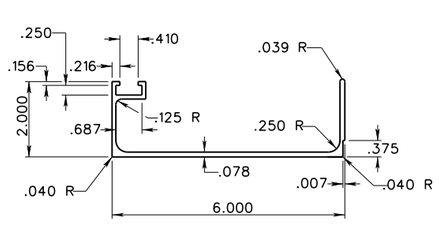

EXTRUSION "B"

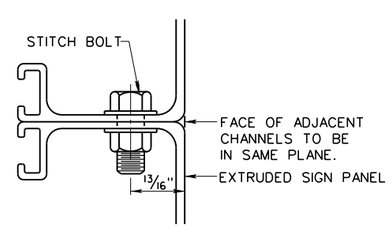

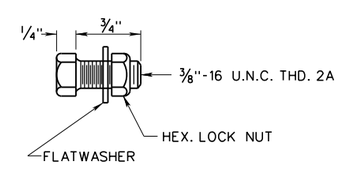

STITCH BOLT DETAIL

WEST VIRGINIA DEPARTMENT OF TRANSPORTATION
DIVISION OF HIGHWAYS
STANDARD DETAIL

PREPARED: 8/2018
REVISION DATE

ALUMINUM EXTRUDED SIGN PANEL

STANDARD SHEET TE7-1

TRAFFIC ENGINEERING DIVISION

12/19/2018

Z:\Projects\WVDOT\Standard Details vol II\New_Sheets\Signing\TE7-1.dgn

J04C02C03-STDBOR c

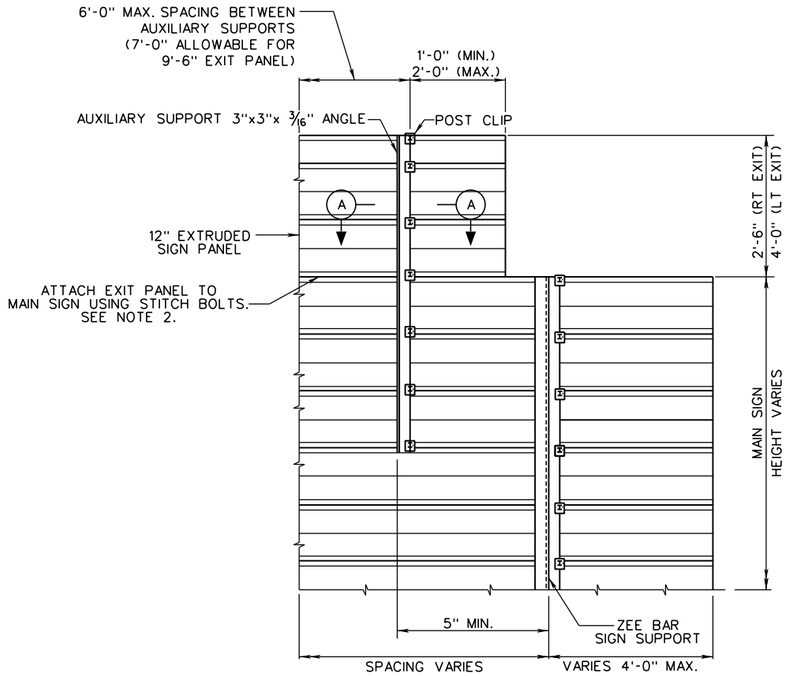

OVERHEAD SIGN

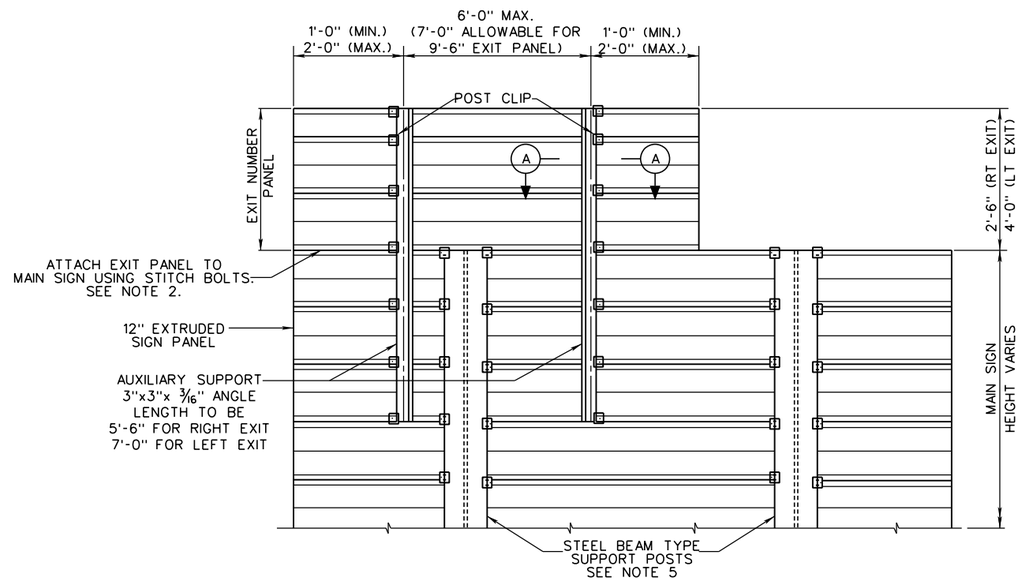

GROUND MOUNT SIGN

EXIT NUMBER PANEL INSTALLATION

LOOKING AT SIGN BACK

NOTES:

1. EXIT NUMBER PANELS SHALL BE MOUNTED TO THE MAIN SIGN USING STITCH BOLTS AND AUXILIARY SUPPORTS AS SHOWN.
2. IF THE SIGN THAT THE EXIT PANEL IS TO BE MOUNTED TO IS MANUFACTURED TO AN EVEN FOOT LENGTH, THE BOTTOM FLANGE OF THE BOTTOM EXIT PANEL SHALL HAVE A 7/16 IN. STITCH BOLT HOLE DRILLED OR PUNCHED 6 IN. FROM THE END OF THE PANEL THAT IS FLUSH WITH THE END OF THE SIGN, AND ADDITIONAL 7/16 IN. HOLES SHALL BE PUNCHED ON 24 IN. SPACING IN ORDER FOR THE HOLES TO ALIGN WITH THE HOLES IN THE TOP FLANGE OF THE SIGN. THE 7/16 IN. HOLES MAY BE SHOP PUNCHED OR FIELD DRILLED.
3. POSTS AND AUXILIARY SUPPORTS SHALL NOT EXTEND ABOVE THE TOP OF THE MAIN SIGN OR EXIT PANEL.
4. SIGN EXTENSIONS SHALL BE STITCH BOLTED TO THE EXISTING SIGN PANEL @ 24 IN. C/C, MAX. AS SHOWN ON TE7-1. THE SIGN EXTENSION AUXILIARY SUPPORTS DETAIL SHALL BE ONLY BE USED WHEN SPECIFIED IN THE PROJECT PLANS. THIS DETAIL SHALL NOT BE PERMITTED FOR USE WITH NEW ASSEMBLIES THAT INCLUDE NEW SIGN(S) AND SUPPORTS.
5. MAIN SIGN SUPPORT POST CLIP ARRANGEMENT SHOWN IS FOR A SIGN LONGER THAN 24 FT. SEE NOTES ON SHEET TE7-1.
6. A POST CLIP SHALL BE USED AT EACH SEAM ALONG EACH AUXILLARY SUPPORT.
7. SEE SHEET TE7-1 FOR EXTRUDED SIGN PANEL, POST CLIP, AND STITCH BOLT DETAILS.

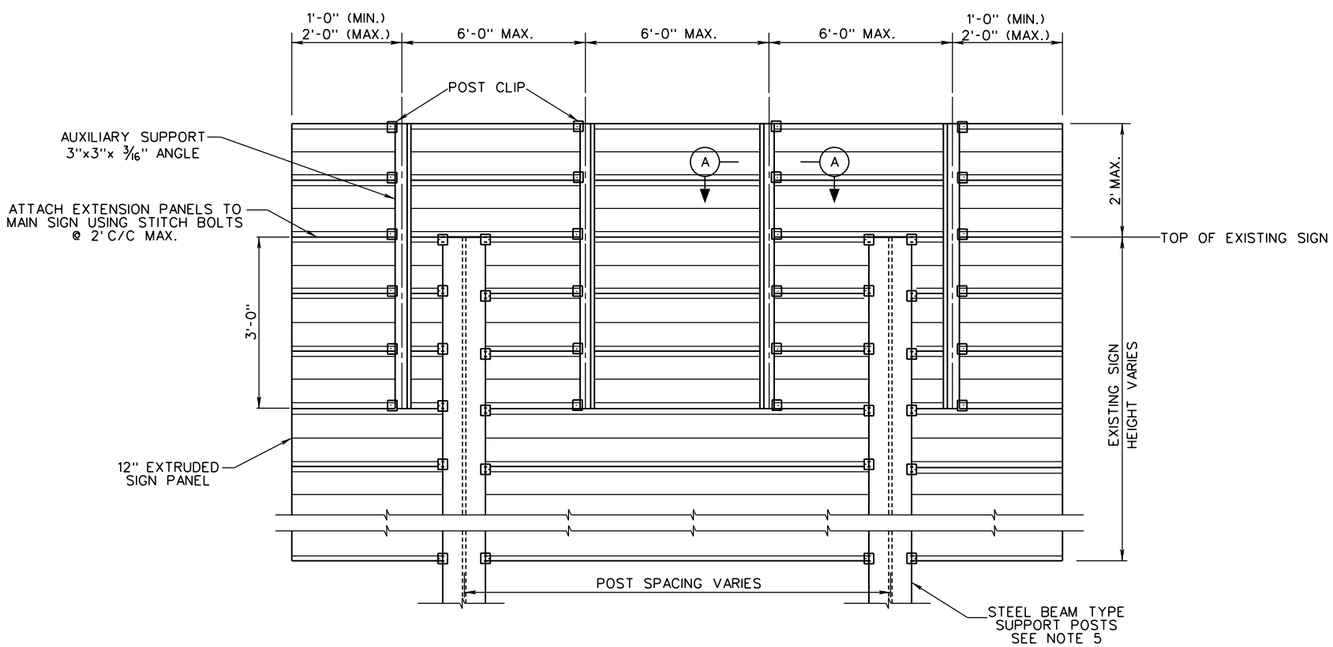

SIGN EXTENSION AUXILIARY SUPPORTS

FOR EXTENDING SIGNS ABOVE EXISTING SUPPORTS

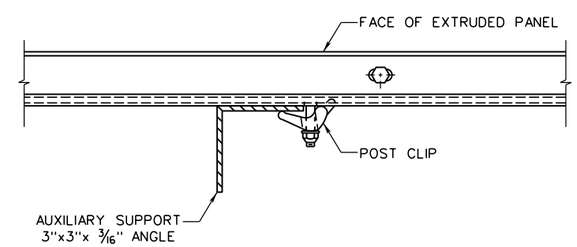

SECTION A-A

WEST VIRGINIA DEPARTMENT OF TRANSPORTATION
DIVISION OF HIGHWAYS
STANDARD DETAIL

PREPARED: 8/2018
REVISION DATE

AUXILIARY SUPPORTS FOR EXIT PANELS AND SIGN EXTENSIONS

STANDARD SHEET TE8-1

TRAFFIC ENGINEERING DIVISION

12/19/2018

Z:\Projects\WVDOT\Standard Details vol II\New_Sheets\Signing\TE8-1.dgn

J04C02C03-STDBDR c

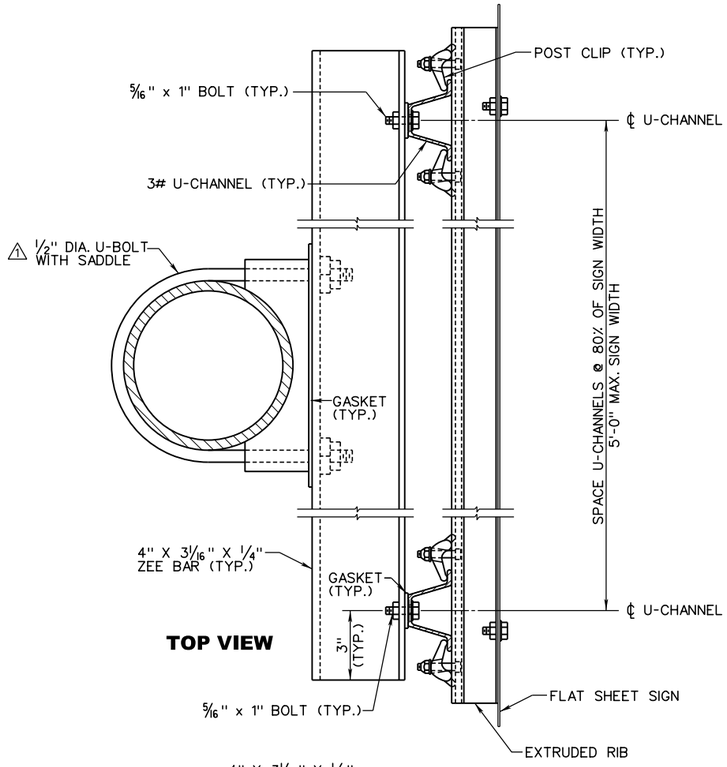

TOP VIEW

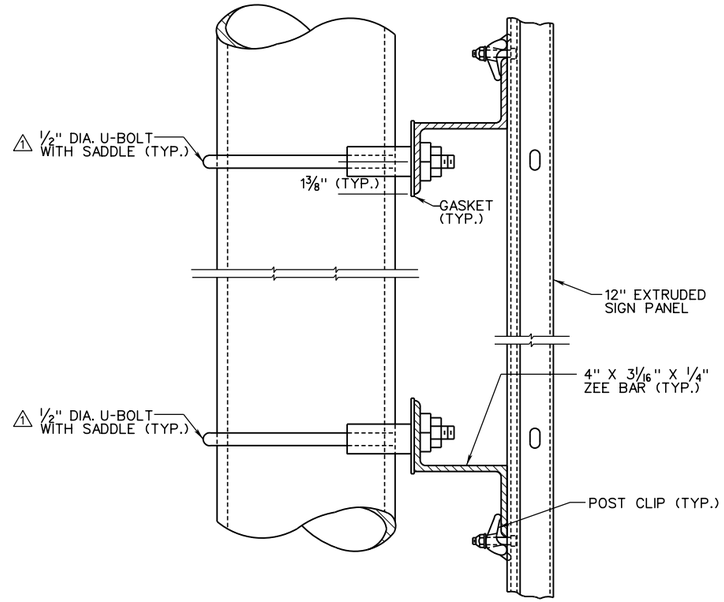

TOP VIEW

NOTES:

1. TYPE 1 CLAMP:
   - FOR USE WITH FLAT SHEET SIGNS ONLY.
   - MUST HAVE AT LEAST 2 CLAMPS (BANDS) PER SIGN.
   - MAX. AREA PER BAND TO BE 9 SF.
   - MAX. SIGN WIDTH TO BE 3 FT. (INCLUDES 3 FT. DIAMOND).
2. TYPE 2 CLAMP:
   - USED FOR ATTACHMENT OF SIGNS TO VERTICAL TUBES.
   - CAN BE USED FOR FLAT SHEET OR EXTRUDED PANEL SIGNS.
   - FLAT SHEET SIGNS MUST HAVE EXTRUDED RIBBING.
   - USE SHIMS (SEE SHEET TE17-1) AT UPPER ZEE TO U-CHANNEL CONNECTION ON TAPERED POSTS.
3. TYPE 3 CLAMP:
   - USED FOR ATTACHMENT OF SIGNS TO HORIZONTAL TUBES.
   - CAN BE USED FOR FLAT SHEET OR EXTRUDED PANEL SIGNS.
   - FLAT SHEET SIGNS MUST HAVE EXTRUDED RIBBING.
4. CONTACT BETWEEN ALUMINUM AND GALVANIZED PARTS SHALL BE PREVENTED WITH A MINIMUM 1/16 INCH THICK GASKET. GASKETS ARE NOT REQUIRED BETWEEN STAINLESS STEEL AND ALUMINUM.
5. SIGNS MOUNTED USING TYPE 1 CLAMPS SHALL BE MOUNTED USING THE STANDARD PUNCHING AS SHOWN IN THE TP SERIES IF POSSIBLE. IF HOLES ARE REQUIRED TO BE FIELD PUNCHED, THE PUNCHING SHALL BE APPROVED BY THE ENGINEER. THE HOLES SHALL BE PUNCHED SUCH THAT SPACING BETWEEN THE HOLES AND FROM THE OUTERMOST HOLES TO THE EDGES OF THE SIGN ARE UNIFORM. IN ADDITION, THE HOLE LOCATIONS SHALL BE PLACED SUCH THAT THE ATTACHMENT HARDWARE WILL NOT UNNECESSARILY INTERFERE WITH THE SIGN MESSAGE.
6. SEE SHEET TE17-1 REGARDING DETAILS FOR ATTACHMENT OF FLAT SHEET SIGN FACE TO EXTRUDED RIB AND FOR EXTRUDED RIB DIMENSIONING DETAILS.
7. SEE SHEET TE7-1 FOR EXTRUDED SIGN PANEL, POST CLIP, AND STITCH BOLT DETAILS.
8. △1 ALL U-BOLTS TO INCLUDE SADDLE BETWEEN TUBE AND ZEE BAR.

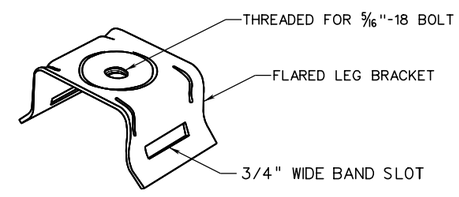

FLARED LEG BRACKET

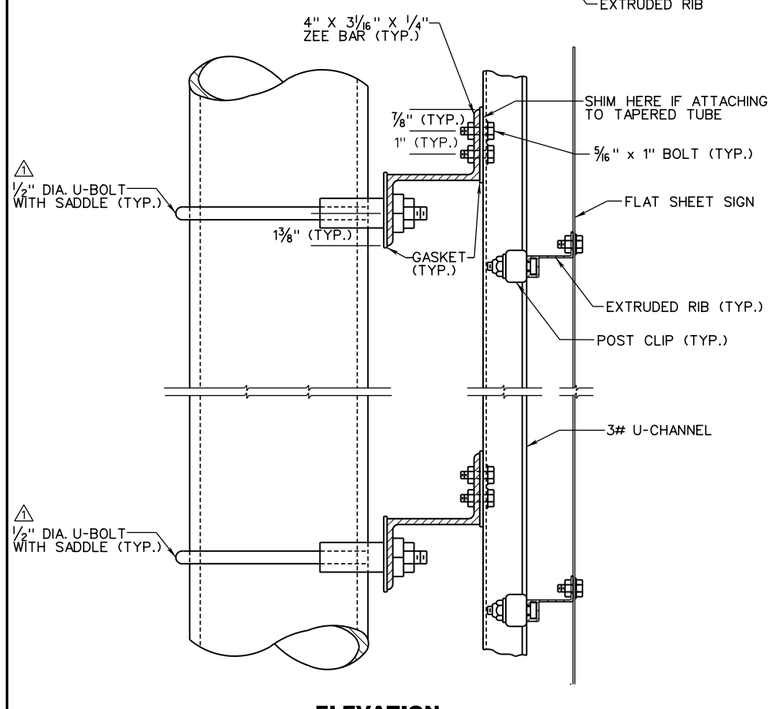

ELEVATION

TYPE 2

VERTICAL TUBE MOUNT
FLAT SHEET SIGN W/
EXTRUDED RIB SHOWN

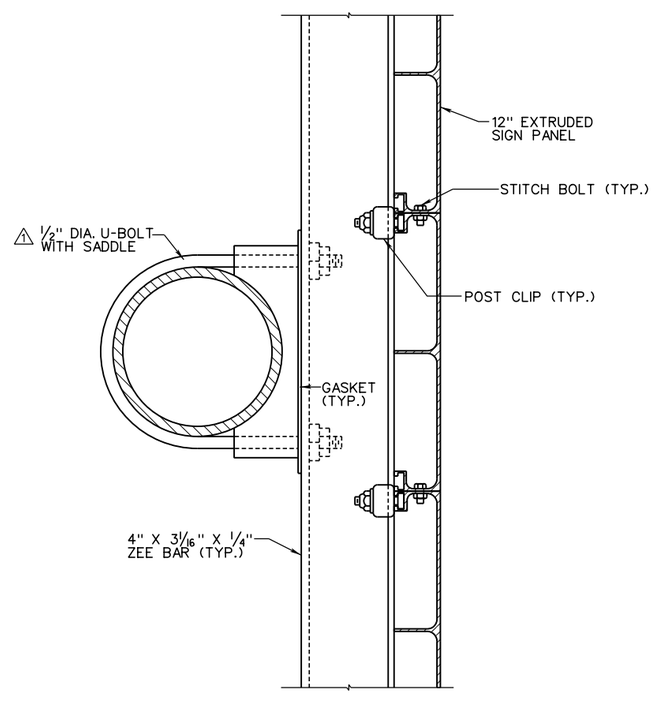

ELEVATION

TYPE 3

HORIZONTAL TUBE MOUNT
EXTRUDED PANEL SIGN SHOWN

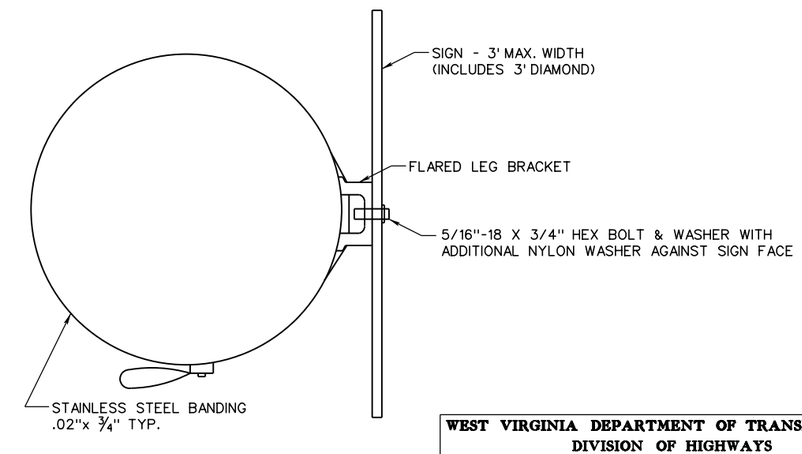

TYPE 1

VERTICAL OR HORIZONTAL MOUNT
MAX. 9 SQ. FT. PER BAND
MIN. 2 BANDS PER SIGN

△1 ADDED SADDLE TO U-BOLTS

WEST VIRGINIA DEPARTMENT OF TRANSPORTATION
DIVISION OF HIGHWAYS
STANDARD DETAIL

PREPARED: 8/2018

REVISION DATE
△1 4/2022

SIGN CLAMPS FOR TUBULAR SUPPORTS

STANDARD SHEET TE9-1

Z:\Projects\WVDOT\Standard Details, vol II\Final Submittal\Revised DGNs\Revised 4-2022\TE9-1 Rev 4-2022.dgn
8/17/2023
J04C02C03-STDBDR c
TRAFFIC ENGINEERING DIVISION

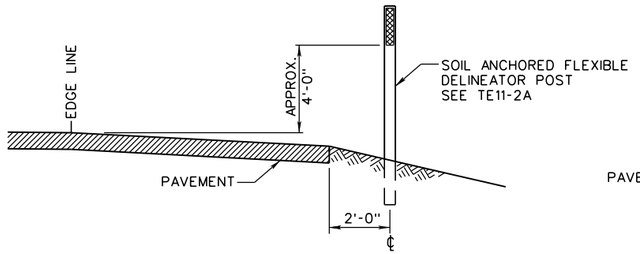

TYPICAL SECTION

THIS DETAIL SHALL APPLY TO THE MAINLINE OF ROADWAYS AND THE LEFT AND RIGHT HAND SIDES OF RAMPS WHEN REQUIRED PER SHEET TE11-3B.

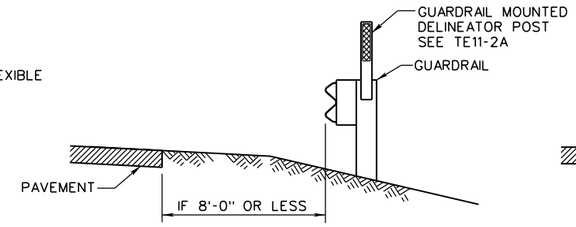

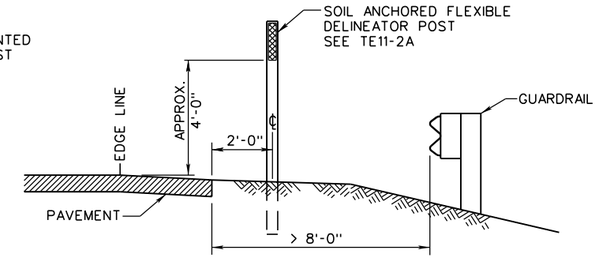

TYPICAL SECTION WITH GUARDRAIL

SEE NOTE 1

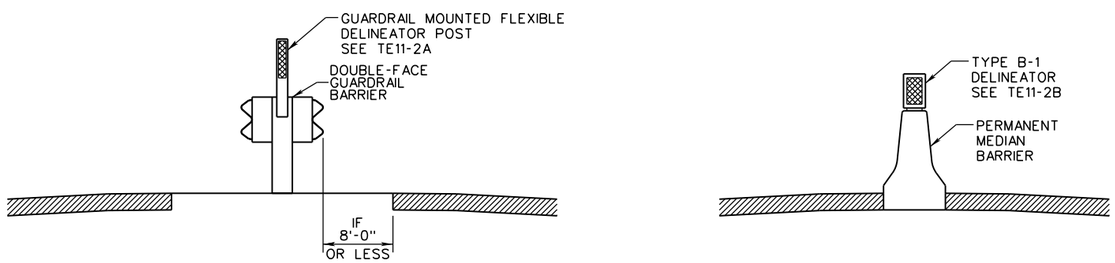

TYPICAL SECTION-MEDIAN BARRIER

SEE NOTE 4

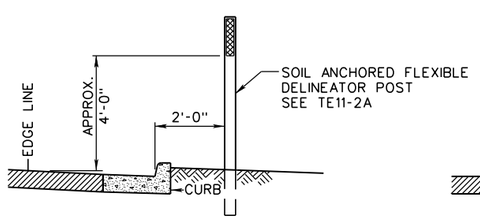

TYPICAL SECTION WITH CURBING

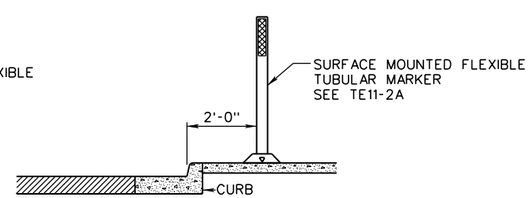

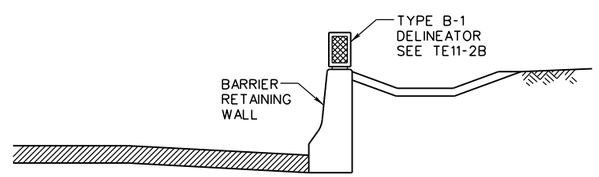

TYPICAL SECTION - BARRIER RETAINING WALL

NOTES:

WITH THE EXCEPTION OF LOCATIONS WHERE ROADWAY LIGHTING IS PROVIDED, DELINEATORS SHALL BE INSTALLED ALONG THE RIGHT HAND SIDE OF INTERSTATES AND EXPRESSWAYS, ON BARRIERS ALONG THE LEFT HAND SIDE OF INTERSTATES AND EXPRESSWAYS WHEN REQUIRED BASED ON THE GUIDELINES HEREIN, AND ALONG THE RAMPS OF INTERCHANGES AS SHOWN ON SHEET TE11-3B.

1. GUARDRAIL MOUNTED DELINEATOR POSTS SHALL BE USED ON THE PORTIONS OF GUARDRAIL RUNS THAT ARE PARALLEL TO THE ROADWAY AND IF THE FRONT FACE OF THE GUARDRAIL IS 8 FT OR LESS FROM THE EDGE OF PAVEMENT. THE LEFT SIDE DRAWING SHALL ALSO BE USED FOR SINGLE FACED GUARDRAIL MOUNTED ON THE LEFT HAND SIDE OF THE ROADWAY WHICH MEETS THE 8 FT OR LESS OFFSET REQUIREMENT.

   FOR RUNS OF BACK TO BACK GUARDRAIL, MONO-DIRECTIONAL OR BI-DIRECTIONAL REFLECTIVE DEVICES SHALL BE USED BASED ON ONE OR BOTH DIRECTIONS MEETING THE 8 FT OFFSET REQUIREMENT.

   IF THE FRONT FACE OF THE GUARDRAIL IS GREATER THAN 8 FT FROM THE EDGE OF PAVEMENT AND DELINEATION IS STILL REQUIRED, A MONO-DIRECTIONAL SOIL ANCHORED FLEXIBLE DELINEATOR POST SHALL BE INSTALLED BETWEEN THE EDGE OF PAVEMENT AND THE GUARDRAIL PER THE RIGHT SIDE DRAWING.

2. DELINEATORS SHALL BE INSTALLED PLUMB, OR AS PLUMB AS POSSIBLE, REGARDLESS OF THE LEVELNESS OF THE GROUND SURFACE OR THE RELATIVE PLUMBNESS OF THE SUPPORT BEING ATTACHED TO.

3. WHEN INSTALLED ON A DIVIDED HIGHWAY, ALL DELINEATION DEVICES SHOWN HEREIN THAT ARE INTENDED TO SUPPLEMENT A WHITE EDGE LINE SHALL BE INSTALLED WITH RED SHEETING ON THE BACK FACE.

4. FOR DOUBLE-FACE GUARDRAIL AND DOUBLE-FACE PERMANENT CONCRETE BARRIER, SEE THE SECOND PARAGRAPH OF NOTE 1 IN ORDER TO DETERMINE IF DELINEATION IS REQUIRED, AND IF SO, IF MONO OR BI-DIRECTIONAL DELINEATION IS REQUIRED. FOR CONCRETE BARRIER, THE 8 FT OFFSET REQUIREMENT SHALL BE APPLIED TO THE FRONT FACE OF THE BARRIER AT THE BOTTOM.

   IF THE GUARDRAIL OR CONCRETE BARRIER IS SINGLE FACED AND IS ON THE LEFT HAND SIDE, SEE THE FIRST PARAGRAPH OF NOTE 1 IN ORDER TO DETERMINE IF MONO-DIRECTIONAL DELINEATION IS REQUIRED. FOR CONCRETE BARRIER, THE 8 FT OFFSET REQUIREMENT SHALL BE APPLIED TO THE FRONT FACE OF THE BARRIER AT THE BOTTOM.

5. THE GUIDELINES PROVIDED ABOVE MAY NOT APPLY TO CIRCUMSTANCES ALONG INTERCHANGE RAMPS. IN CASES WHERE DELINEATION IS REQUIRED ALONG RAMPS PER SHEET TE11-3B REGARDLESS OF THE BARRIER OFFSET, SOIL ANCHORED FLEXIBLE DELINEATOR POSTSS SHALL BE PLACED IN ACCORDANCE WITH THE TYPICAL SECTION DETAIL IF THE BARRIER OFFSET EXCEEDS THE 8 FT OFFSET REQUIREMENT SPECIFIED IN THE PREVIOUS NOTES, PROVIDING THAT THE PAVEMENT ENDS TWO FEET OR MORE BEFORE THE FACE OF THE BARRIER. OTHERWISE, PLACE THE DELINEATION ON THE BARRIER.

WEST VIRGINIA DEPARTMENT OF TRANSPORTATION
DIVISION OF HIGHWAYS
STANDARD DETAIL

PREPARED: 8/2018

REVISION DATE

HIGHWAY DELINEATORS PLACEMENT

STANDARD SHEET TE11-1

TRAFFIC ENGINEERING DIVISION

12/19/2018

Z:\Projects\WVDOT\Standard Details vol II\New_Sheets\Signing\TE11-1.dgn

J04C02C03-STDBOR c

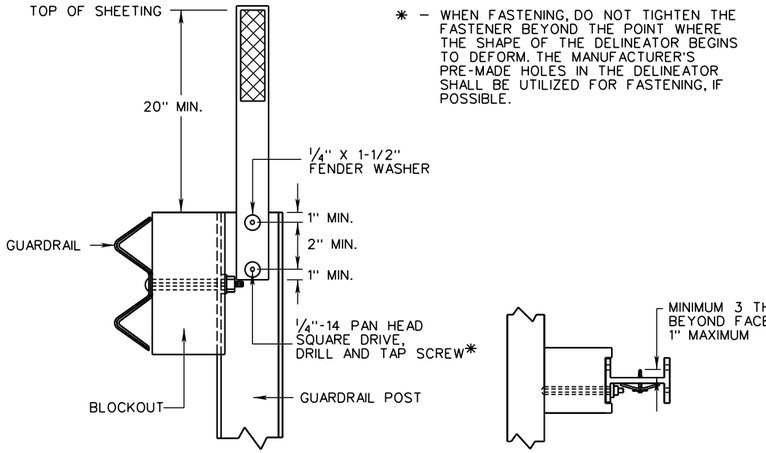

* – WHEN FASTENING, DO NOT TIGHTEN THE FASTENER BEYOND THE POINT WHERE THE SHAPE OF THE DELINEATOR BEGINS TO DEFORM. THE MANUFACTURER'S PRE-MADE HOLES IN THE DELINEATOR SHALL BE UTILIZED FOR FASTENING, IF POSSIBLE.

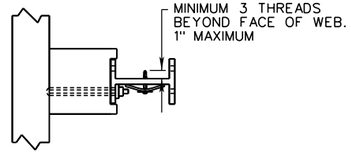

FRONT VIEW **TOP VIEW**

STEEL GUARDRAIL POST

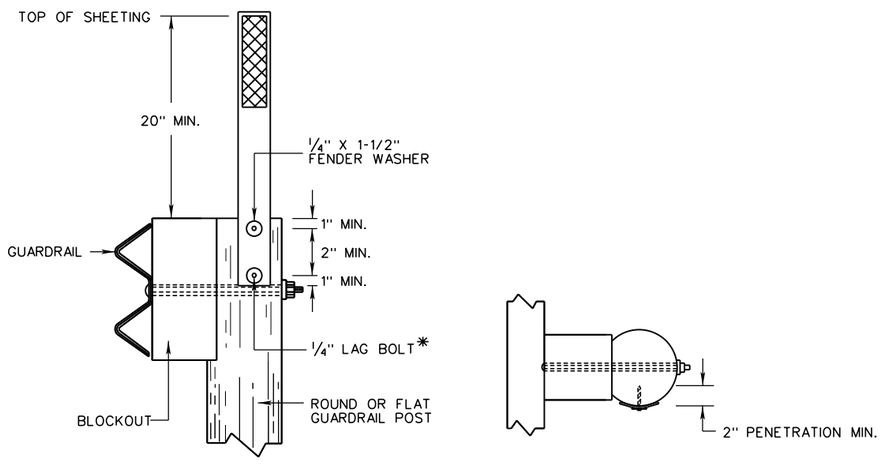

FRONT VIEW **TOP VIEW**

WOOD GUARDRAIL POST

GUARDRAIL MOUNTED FLEXIBLE DELINEATOR POSTS TYPICAL INSTALLATION DETAILS

DELINEATORS ARE NOT TO BE FASTENED TO GUARDRAIL BLOCKOUTS

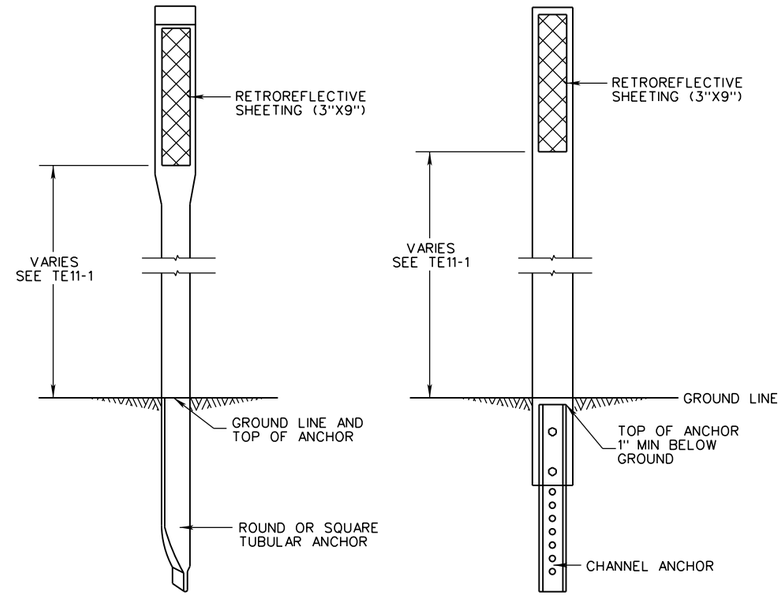

TUBULAR ANCHOR TYPE **CHANNEL ANCHOR TYPE**

SOIL ANCHORED FLEXIBLE DELINEATOR POSTS

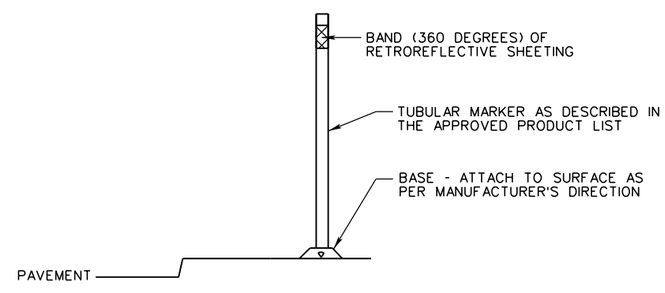

SURFACE MOUNTED FLEXIBLE TUBULAR MARKERS

FOR CONCRETE AND ASPHALT APPLICATIONS

NOTES:

1. THE DELINEATORS USED SHALL BE MODELS SHOWN ON THE DIVISION'S APPROVED PRODUCTS LIST (APL), AND SHALL BE IN ACCORDANCE WITH SECTION 661 OF THE WEST VIRGINIA DEPARTMENT OF TRANSPORTATION, DIVISION OF HIGHWAYS STANDARD SPECIFICATIONS, ROADS AND BRIDGES, LATEST EDITION.
2. THE COLOR OF THE BODY OF ALL SOIL ANCHORED FLEXIBLE DELINEATORS, SURFACE MOUNTED FLEXIBLE TUBULAR MARKERS, AND GUARDRAIL MOUNTED FLEXIBLE DELINEATORS, AS WELL AS THE RETROREFLECTIVE SHEETING ON THE FRONT FACE, SHALL MATCH THE COLOR OF THE PAVEMENT MARKING THAT THE DEVICE IS INTENDED TO SUPPLEMENT. THE SAME SHALL APPLY TO B-1 DELINEATORS EXCEPT IF THE MANUFACTURER DOES NOT SUPPLY UNITS WITH WHITE OR YELLOW BODIES, THE BODY OF THE UNIT MAY BE A NEUTRAL COLOR SUCH AS BLACK OR GREY. LIKE COLORED OR RED SHEETING SHALL BE INSTALLED ON THE BACK FACE OF THE DEVICE AS REQUIRED HEREIN OR SPECIFIED ELSEWHERE.
3. WHEN INSTALLED ON A DIVIDED HIGHWAY, ALL DELINEATION DEVICES SHOWN HEREIN THAT ARE INTENDED TO SUPPLEMENT A WHITE EDGE LINE SHALL BE INSTALLED WITH RED SHEETING ON THE BACK FACE. WHITE DELINEATORS ON UNDIVIDED HIGHWAYS SHALL BE MONO-DIRECTIONAL WITH NO SHEETING ON THE BACK FACE.

WEST VIRGINIA DEPARTMENT OF TRANSPORTATION
DIVISION OF HIGHWAYS
STANDARD DETAIL

PREPARED: 8/2018

REVISION DATE

HIGHWAY DELINEATORS INSTALLATION DETAILS

STANDARD SHEET TE11-2A

12/19/2018
Z:\Projects\WVDOT\Standard Details vol II\New_Sheets\Signing\TE11-2A.dgn
J04C02C03-STDBDR c
TRAFFIC ENGINEERING DIVISION

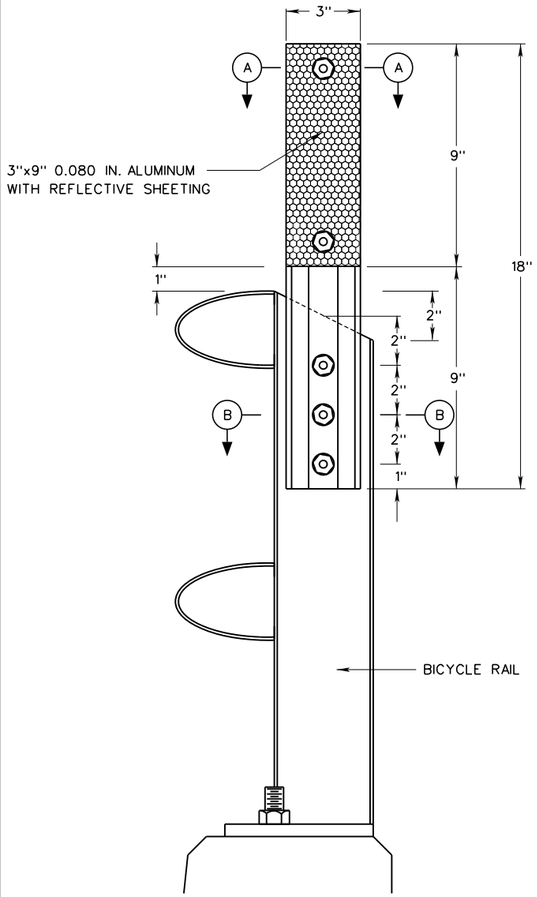

ELEVATION

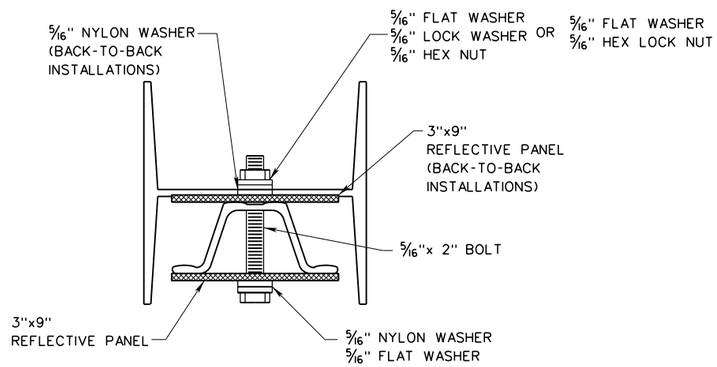

SECTION A-A

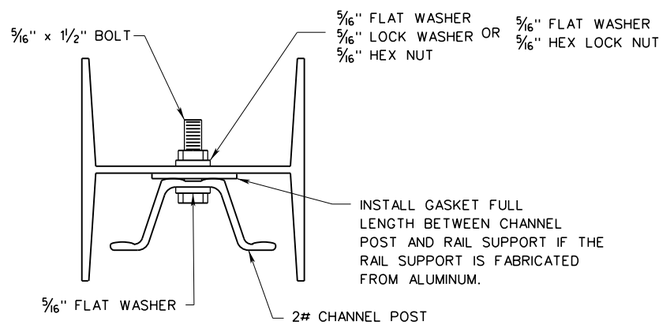

SECTION B-B

ALL HARDWARE SHALL BE AS STATED
IN THE STANDARD SPECIFICATION.

3" X 9" XS-1 DELINEATOR ON BICYCLE RAIL

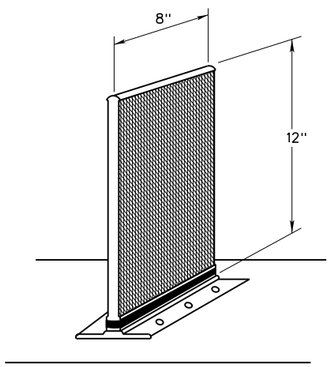

TYPE B-1 DELINEATOR

DESIGN AND DIMENSIONS ARE NOMINAL. PRODUCT USED SHALL MEET THE REQUIREMENTS IN SECTION 661 OF THE SPECIFICATIONS AND SHALL BE LISTED ON THE DIVISION APL.

B-1 DELINEATORS FOR PERMANENT APPLICATIONS SHALL BE MECHANICALLY ANCHORED TO THE BARRIER.

WEST VIRGINIA DEPARTMENT OF TRANSPORTATION
DIVISION OF HIGHWAYS
STANDARD DETAIL

PREPARED: 8/2018
REVISION DATE

HIGHWAY DELINEATORS INSTALLATION DETAILS

STANDARD SHEET TE11-2B

TRAFFIC ENGINEERING DIVISION

12/19/2018

Z:\Projects\WVDOT\Standard Details vol II\New_Sheets\Signing\TE11-2B.dgn

J04C02C03-STDBOR c

NOTES:

1. DELINEATOR SPACING SHALL BE MEASURED AT THE EDGE OF PAVEMENT NEAREST TO THE LOCATION OF DELINEATOR.

2. SPACING SHALL BE DETERMINED FROM THE CURVE DATA SHOWN ON THE CURVE DATA SHEET OF THE PLANS. SPACING ON TANGENTS SHALL BE 300 FT.

3. THE SPACING S ON THE CURVE IS FOUND FROM THE FORMULA $S=3\sqrt{R-50}$, WHERE R IS THE RADIUS OF THE CURVE IN FEET. THE SPACING TO THE FIRST DELINEATOR IN ADVANCE OF AND BEYOND THE CURVE IS 2S, TO THE NEXT DELINEATOR 3S, AND TO THE NEXT 6S, BUT NOT TO EXCEED 300 FT. MINIMUM SPACING IS 20 FT.

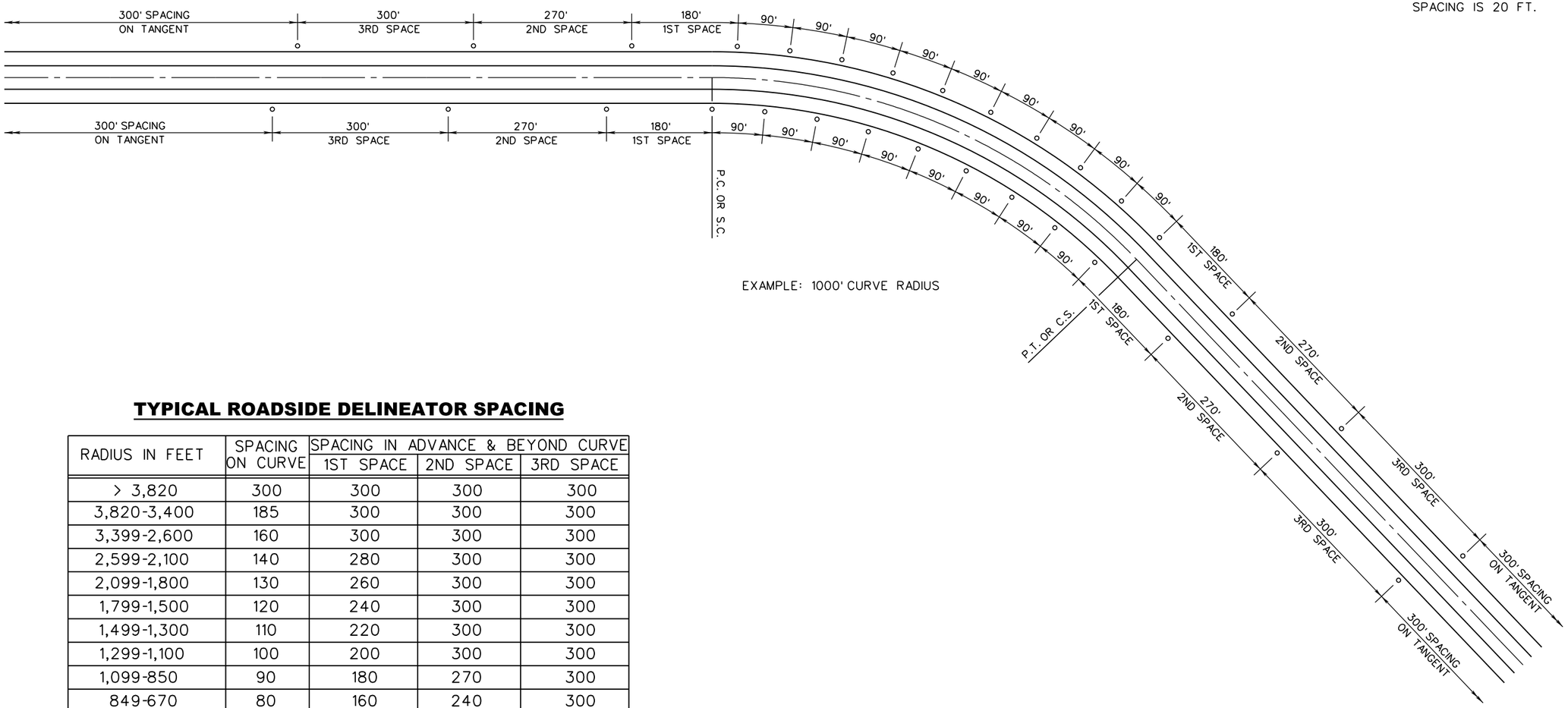

TYPICAL ROADSIDE DELINEATOR SPACING

RADIUS IN FEET	SPACING ON CURVE	SPACING IN ADVANCE & BEYOND CURVE		
		1ST SPACE	2ND SPACE	3RD SPACE
> 3,820	300	300	300	300
3,820-3,400	185	300	300	300
3,399-2,600	160	300	300	300
2,599-2,100	140	280	300	300
2,099-1,800	130	260	300	300
1,799-1,500	120	240	300	300
1,499-1,300	110	220	300	300
1,299-1,100	100	200	300	300
1,099-850	90	180	270	300
849-670	80	160	240	300
669-520	70	140	210	300
519-390	60	120	180	300
389-270	50	100	150	300
269-180	40	80	120	240
179-120	30	60	90	180
119-75	20	40	60	120
< 75	20	20	30	60

NOTE: THIS CHART TO BE USED FOR UNINTERRUPTED ROADWAY. SEE SHEET TE11-3B & TE11-3C FOR SPACING GUIDANCE AT INTERCHANGES AND LEFT/RIGHT TURN LANES.

TYPICAL HORIZONTAL GEOMETRY TERMS

P.C. = POINT OF CURVATURE, START OF HORIZONTAL CURVE
P.T. = POINT OF TANGENCY, END OF HORIZONTAL CURVE
S.C. = SPIRAL TO CURVE, END OF SPIRAL IN & START OF CURVE
C.S. = CURVE TO SPIRAL, END OF CURVE & START OF SPIRAL OUT

WEST VIRGINIA DEPARTMENT OF TRANSPORTATION
DIVISION OF HIGHWAYS
STANDARD DETAIL

PREPARED: 8/2018
REVISION DATE

HIGHWAY DELINEATORS SPACING

STANDARD SHEET TE11-3A

TRAFFIC ENGINEERING DIVISION

12/19/2018

Z:\Projects\WVDOT\Standard Details vol I\New_Sheets\Signing\TE11-3A.dgn

J04C02C03-STDBOR c

NOTES:

1. DELINEATOR SPACING SHALL BE MEASURED AT THE EDGE OF PAVEMENT NEAREST TO THE LOCATION OF DELINEATOR.

2. DELINEATOR SPACING WITHIN INTERCHANGE MAINLINE AND RAMPS SHALL BE 100 FT. UNLESS CURVE GEOMETRY WOULD REQUIRE CLOSER SPACING BASED ON THE CHART ON TE11-3A.

3. DELINEATORS FOR RAMPS SHALL BE PLACED ON THE RIGHT SIDE, BASED ON DIRECTION OF TRAVEL, AND SHALL BE WHITE EXCEPT IN CASES WHERE A RIGHT HAND CURVE WOULD REQUIRE DELINEATOR SPACING CLOSER THAN 100 FT. IN SUCH CASES THE DELINEATORS SHALL BE PLACED ON THE LEFT SIDE OF THE RAMP AND SHALL BE YELLOW.

4. ALL DELINEATORS ON EXIT RAMPS (WHITE AND YELLOW) SHALL BE RED ON THE BACK UNLESS THEY ARE BACK-TO-BACK YELLOW. IF THE MAINLINE OF THE ROADWAY IS DIVIDED, THE WHITE DELINEATORS ALONG THE MAINLINE SHALL HAVE RED SHEETING PLACED ON THE BACK FACE IN ACCORDANCE WITH THE DRAWING AND THE NOTE ON SHEET TE11-2A.

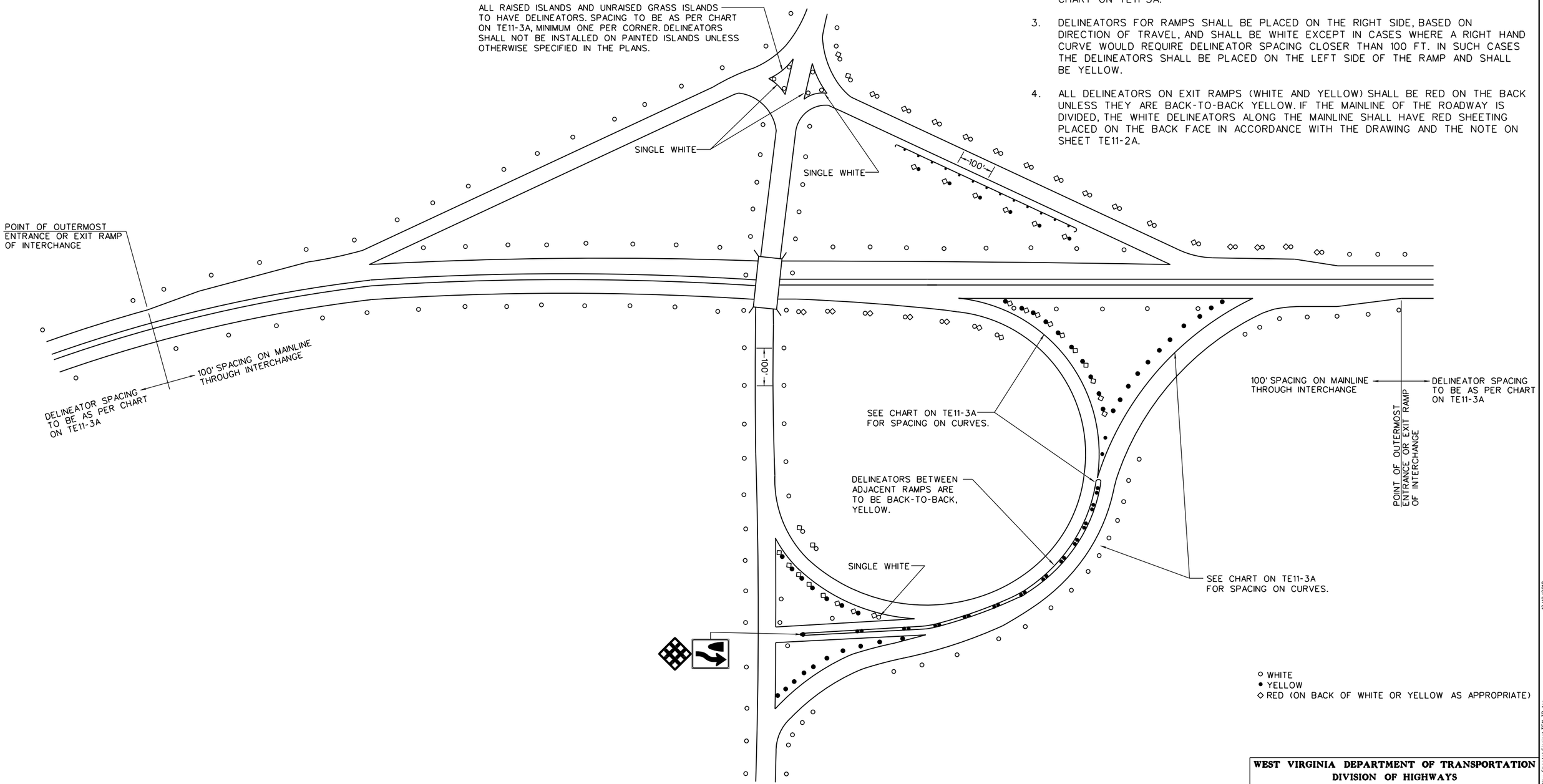

WEST VIRGINIA DEPARTMENT OF TRANSPORTATION
DIVISION OF HIGHWAYS
STANDARD DETAIL

PREPARED: 8/2018

REVISION DATE

HIGHWAY DELINEATORS SPACING ON DIVIDED HIGWAYS AT INTERCHANGE

STANDARD SHEET TE11-3B

TRAFFIC ENGINEERING DIVISION

12/19/2018

Z:\Projects\WVDOT\Standard Details vol II\New_Sheets\Signing\TE11-3B.dgn

J04C02C03-STDBOR c

NOTES:

1. DELINEATOR SPACING SHALL BE MEASURED AT THE EDGE OF PAVEMENT NEAREST TO THE LOCATION OF DELINEATOR.
2. ALL WHITE DELINEATORS ON DIVIDED HIGHWAYS SHALL HAVE RED ON THE BACK. WHITE DELINEATORS ON UNDIVIDED HIGHWAYS SHALL BE MONO-DIRECTIONAL WITH NO SHEETING ON THE BACK FACE.
3. WHITE DELINEATORS SHALL BE SPACED AT 25 FT ALONG ALL TRUE RIGHT TURN LANES. THIS DOES NOT APPLY TO PAINTED SHOULDER STYLE RIGHT TURN LANES.
4. THE DELINEATORS SHOWN SHALL BEGIN AT THE START OF THE TAPERS FOR THE TURN LANES.
5. THE TYPICAL SPACING SHOWN SHALL BE USED THROUGHOUT THE ENTIRE LENGTH FOR TURN LANES HAVING A FULL LANE WIDTH LENGTH OF 300 FT. OR LESS. IF GREATER THAN 300 FT., THE 25 FT. SPACING SHOWN SHALL BE USED ALONG THE TAPER AND FOR THE LAST 200 FT. OF THE TURN LANE. THE SPACING OF THE DELINEATORS IN BETWEEN THESE TWO AREAS SHALL BE 50 FT.

R4-7 & XR-3 OR XR-9 ASSEMBLY TO BE MOUNTED AT A 45° ANGLE AND FACING THE SIDE ROAD. SEE DESIGN GUIDE FOR SIGNING FOR FURTHER GUIDANCE.

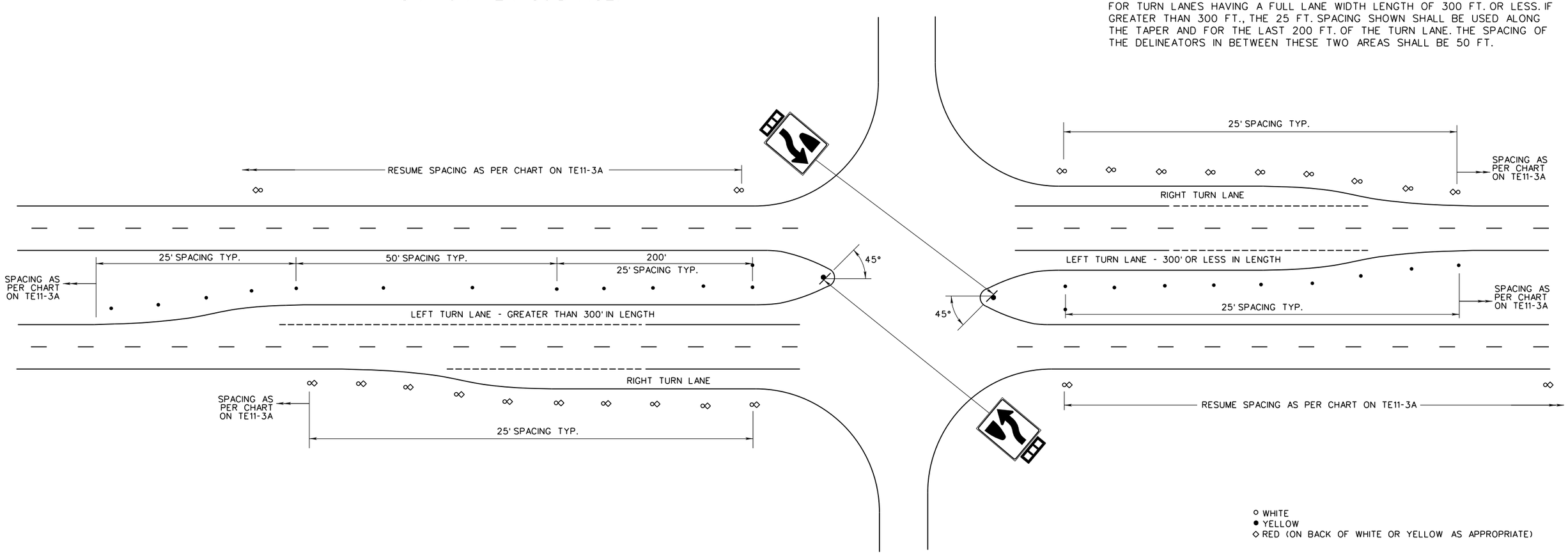

○ WHITE
● YELLOW
◇ RED (ON BACK OF WHITE OR YELLOW AS APPROPRIATE)

WEST VIRGINIA DEPARTMENT OF TRANSPORTATION
DIVISION OF HIGHWAYS
STANDARD DETAIL

PREPARED: 8/2018
REVISION DATE

HIGHWAY DELINEATORS SPACING ON DIVIDED HIGWAYS AT-GRADE INTERSECTIONS

STANDARD SHEET TE11-3C

TRAFFIC ENGINEERING DIVISION

12/19/2018

Z:\Projects\WV001\Standard Details vol II\New_Sheets\Signing\TE11-3C.dgn

J04C02C03-STDBOR c

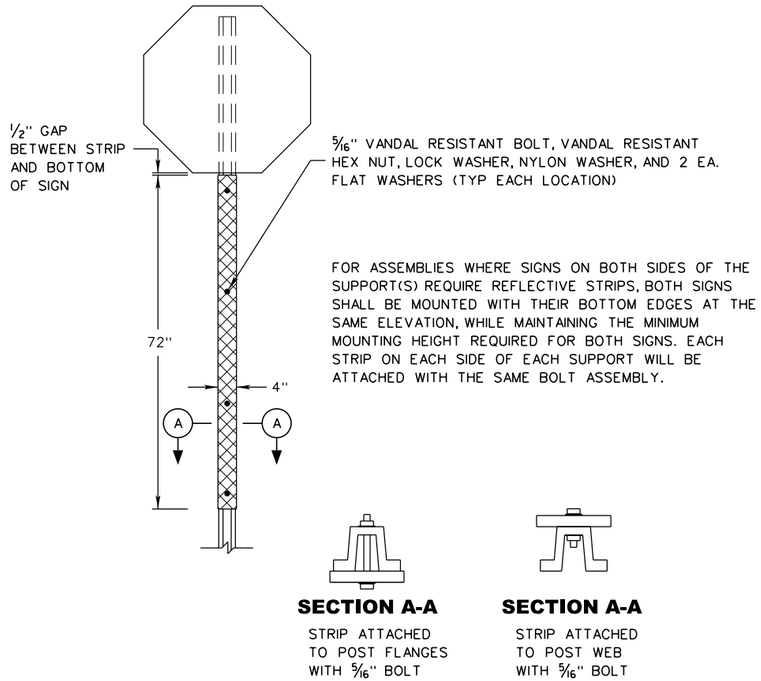

U-CHANNEL OR PRE-PUNCHED SQUARE TUBE INSTALLATION

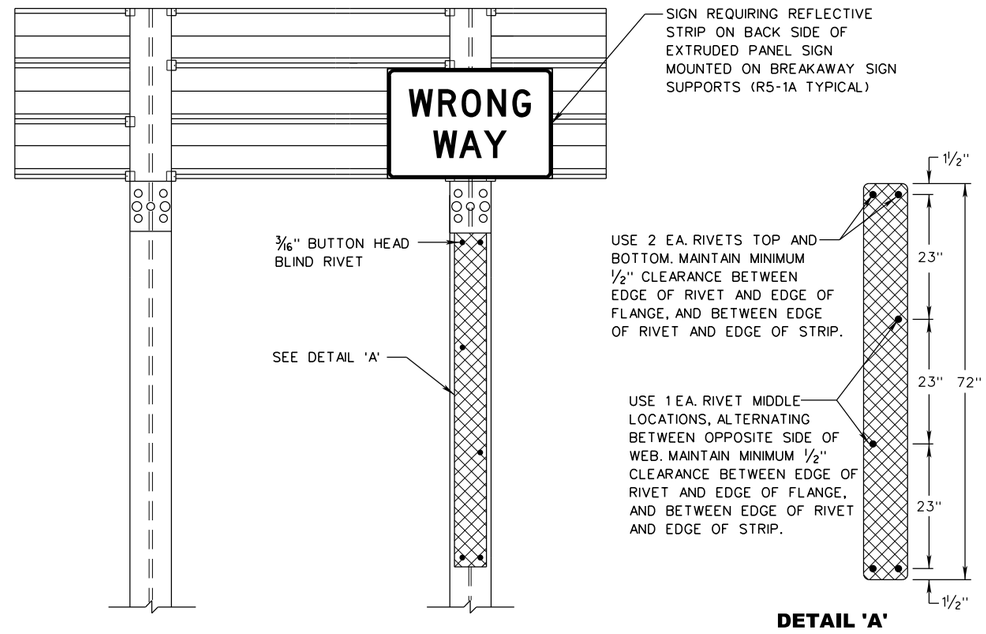

BREAKAWAY SUPPORT OR NON-PERFORATED SQUARE TUBE INSTALLATION

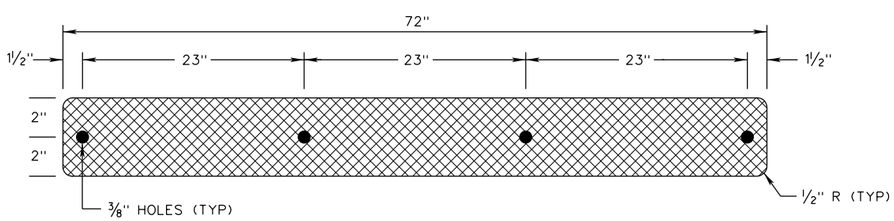

STANDARD NON-PROPRIETARY REFLECTIVE SIGN SUPPORT STRIP

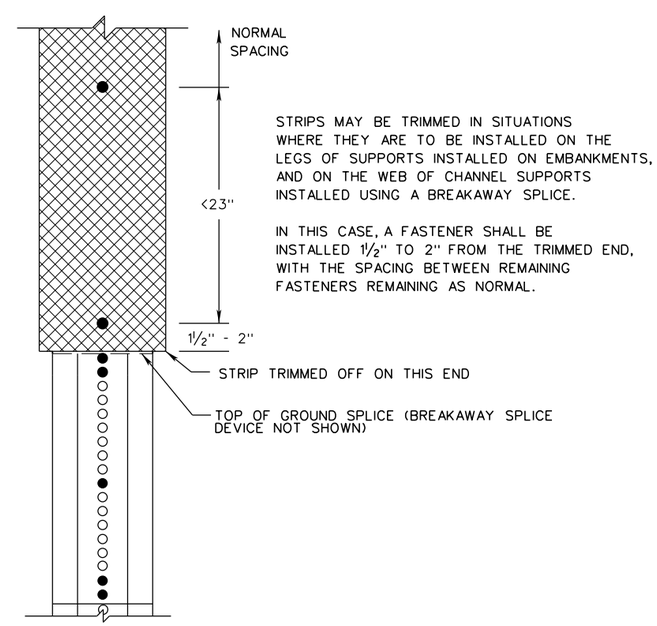

TRIMMING REFLECTIVE STRIPS

NOTES:

STANDARD NON-PROPRIETARY REFLECTIVE POST STRIPS SHALL BE MANUFACTURED AS SHOWN. THE SUBSTRATE FOR THE STRIPS SHALL BE 0.080 INCH ALUMINUM MEETING THE MATERIAL REQUIREMENTS OF SECTION 661 OF THE SPECIFICATIONS. THE SHEETING USED ON THE STRIPS SHALL BE RED, WHITE, FLUORESCENT YELLOW, OR FLUORESCENT YELLOW-GREEN BASED ON THE PRIMARY COLOR OF THE SIGN THAT IS BEING SUPPLEMENTED BY THE STRIP. GRADE OF SHEETING SHALL BE AS SPECIFIED IN THE STANDARD SPECIFICATIONS. STRIPS MAY OR MAY NOT BE MANUFACTURED WITH HOLES PRE-PUNCHED.

MATERIAL REQUIREMENTS FOR THE HARDWARE SPECIFIED FOR USE WITH THE NON-PROPRIETARY REFLECTIVE POST STRIP SHOWN SHALL BE IN ACCORDANCE WITH THE STANDARD SPECIFICATIONS.

THE CONTRACTOR MAY ALTERNATIVELY USE PROPRIETARY REFLECTIVE INSERTS AND/OR STRIPS SHOWN ON THE DOH APPROVED PRODUCTS LIST (APL). THESE PRODUCTS SHALL BE ATTACHED AS RECOMMENDED BY THE MANUFACTURER USING HARDWARE PROVIDED BY THE MANUFACTURER.

REFLECTIVE POST STRIPS SHALL BE REQUIRED TO BE INSTALLED ON ALL SIGN ASSEMBLIES INDICATED SPECIFICALLY, BY ASSEMBLY NUMBER, IN THE PROJECT PLANS. TYPICAL ASSEMBLIES REQUIRING REFLECTIVE POST STRIPS ARE AS FOLLOWS:

RED STRIPS
R1-1 SIGNS ON EXIT RAMPS DIVERGING FROM ROADWAYS THAT MEET THE FOLLOWING CRITERIA:
- o MULTIPLE THROUGH LANES IN EACH DIRECTION, AND
- o POSTED SPEED LIMIT OF 50 MPH OR GREATER

ALL R1-1 SIGNS AT INTERSECTIONS WHERE ONE OF THE INTERSECTING ROADWAYS HAS MULTIPLE THROUGH LANES IN EACH DIRECTION AND A NORMAL POSTED SPEED LIMIT OF 50 MPH OR GREATER.

ALL R1-2, ALL R5-1 AND ALL R5-1A SIGNS.

WHITE STRIPS

ALL R4-7, R4-8, R6-1L AND R6-1R SIGNS

FLUORESCENT YELLOW STRIPS
ALL W1-6, W1-7 AND W1-8

FLUORESCENT YELLOW-GREEN STRIPS
ALL S SERIES (SCHOOL) SIGNS MANUFACTURED USING FLUORESCENT YELLOW-GREEN REFLECTIVE SHEETING.

ADDITIONAL REFLECTIVE POST STRIPS MAY ALSO BE REQUIRED UNDER SPECIAL CIRCUMSTANCES AS DETERMINED BY THE PROJECT DESIGNER OR ENGINEER. THE COLOR STRIPS TO BE UTILIZED IN THESE CASES WILL BE SPECIFIED IN THE PROJECT PLANS OR NOTES.

WEST VIRGINIA DEPARTMENT OF TRANSPORTATION
DIVISION OF HIGHWAYS
STANDARD DETAIL

PREPARED: 8/2018
REVISION DATE

ROADSIDE SIGN SUPPORTS
REFLECTIVE SIGN SUPPORT STRIPS

STANDARD SHEET TE12-1

TRAFFIC ENGINEERING DIVISION

12/19/2018
Z:\Projects\WVDOT\Standard Details vol II\New_Sheets\Signing\TE12-1.dgn
J04C02C03-STDBOR c

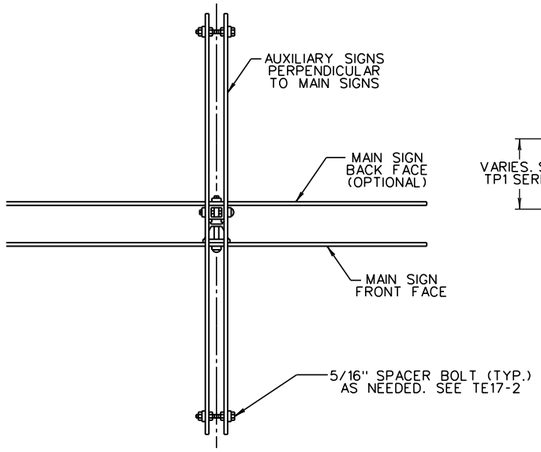

TOP VIEW - ONE SUPPORT

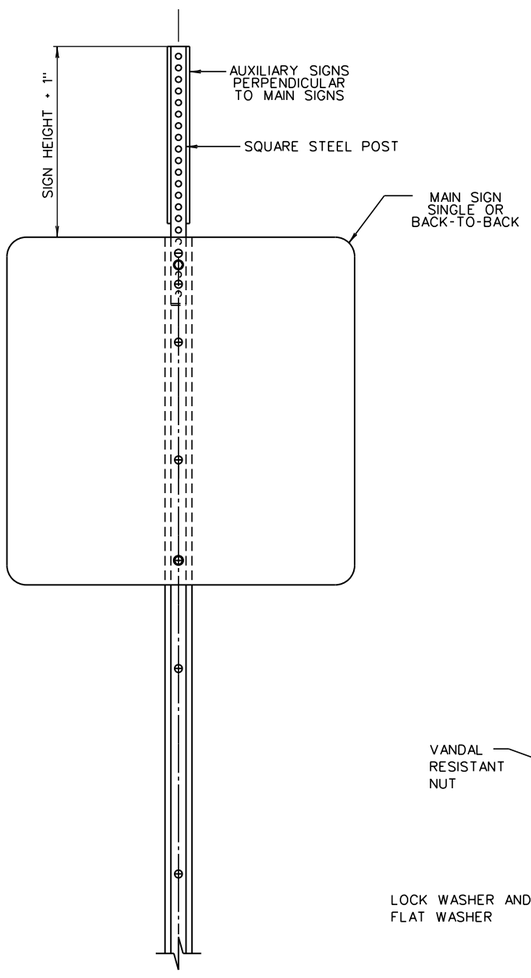

ELEVATION - ONE SUPPORT

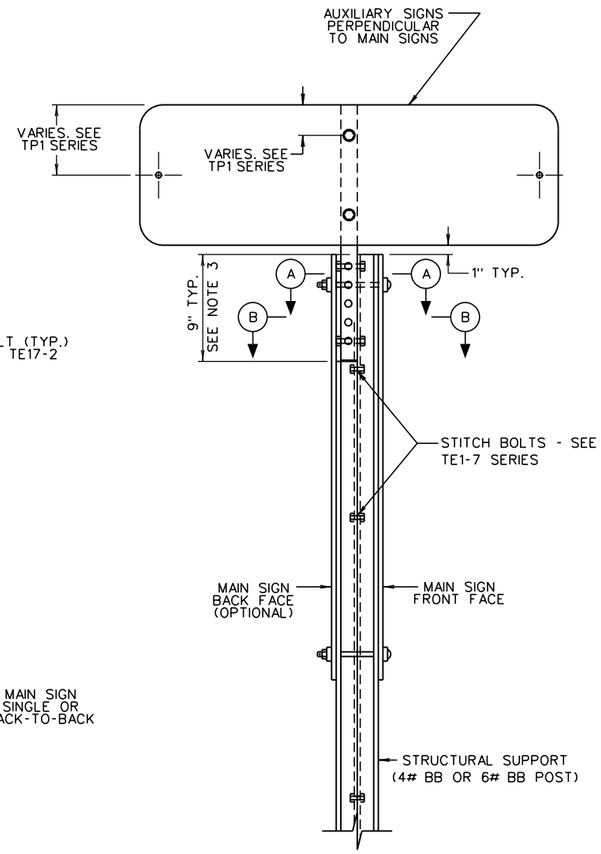

SIDE VIEW - BACK-TO-BACK SIGNS

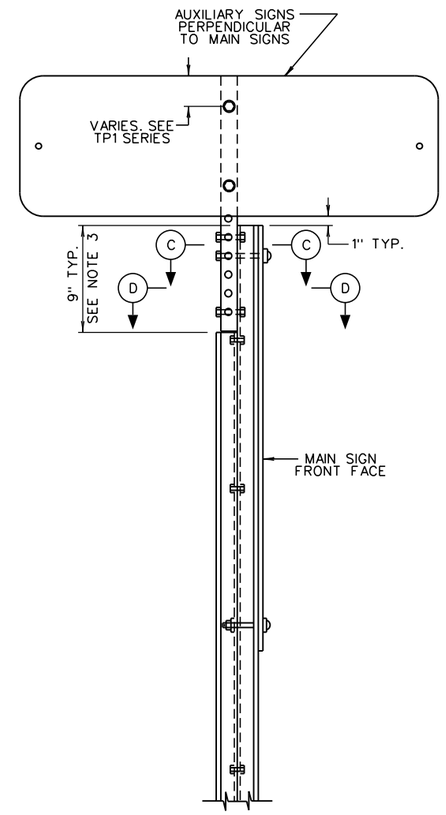

SIDE VIEW - SINGLE SIGN

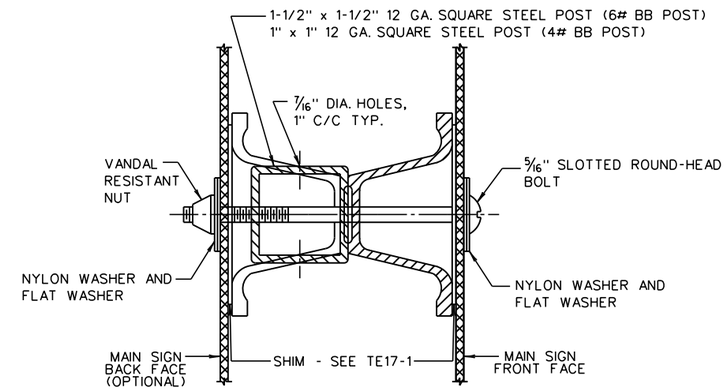

SECTION A-A

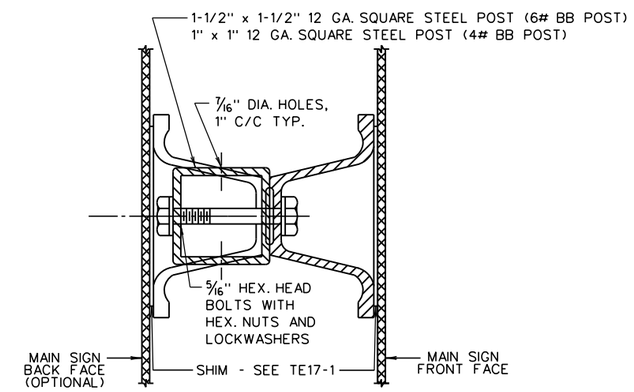

SECTION B-B

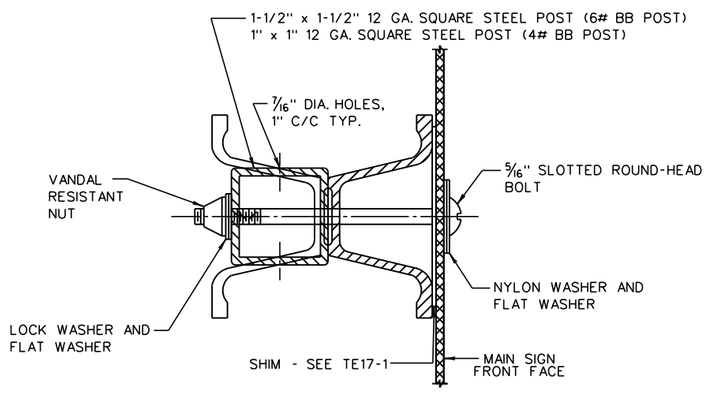

SECTION C-C

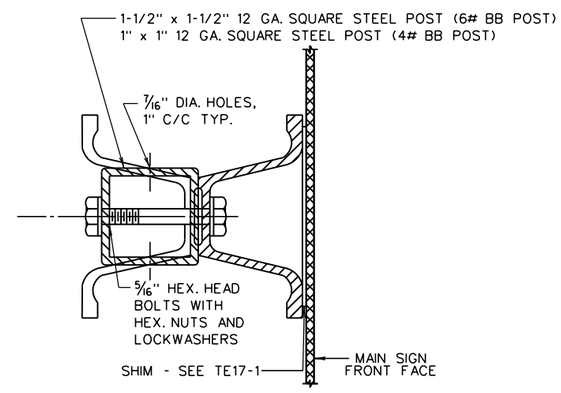

SECTION D-D

NOTES:

1. ALL ITEMS SHOWN ON THIS DETAIL SHALL BE IN ACCORDANCE WITH SECTION 657 OF THE WEST VIRGINIA DIVISION OF HIGHWAYS STANDARD SPECIFICATIONS ROADS AND BRIDGES, CURRENT EDITION, AND ALL CURRENT SUPPLEMENTAL SPECIFICATIONS.
2. MAIN SIGNS SHALL BE ATTACHED TO SUPPORTS AS SHOWN ON TE17-1 AND TE17-2.
3. SQUARE STEEL POST (AUXILIARY SUPPORT) TO OVERLAP U-CHANNEL SUPPORT BY 9 INCHES. TWO 5/16" BOLTS, NUTS, AND WASHERS, ONE THROUGH TOP HOLE OF U CHANNEL SUPPORT AND ONE THROUGH BOTTOM HOLE OF SQUARE STEEL POST, SHALL BE USED TO ATTACH THE AUXILIARY SUPPORT TO THE U-CHANNEL SUPPORT.

WEST VIRGINIA DEPARTMENT OF TRANSPORTATION
DIVISION OF HIGHWAYS
STANDARD DETAIL

PREPARED: 8/2018
REVISION DATE

PERPENDICULAR AUXILIARY SIGN ATTACHMENT DETAILS

ONE SUPPORT

STANDARD SHEET TE16-1A

TRAFFIC ENGINEERING DIVISION

12/19/2018

Z:\Projects\WVDOT\Standard Details vol II\New_Sheets\Signing\TE16-1A.dgn

J04C02C03-STDBDR c

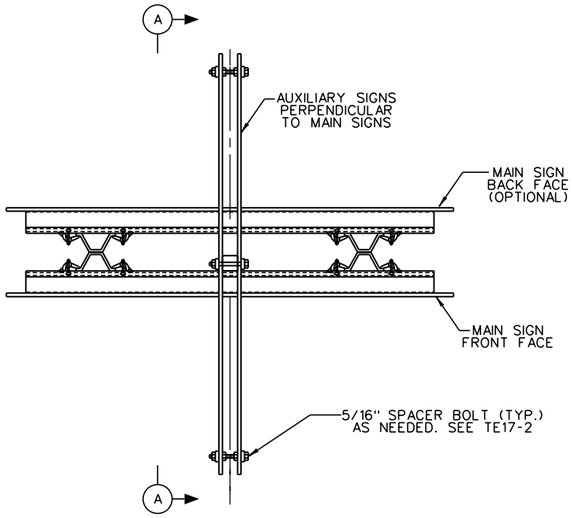

TOP VIEW - TWO SUPPORTS

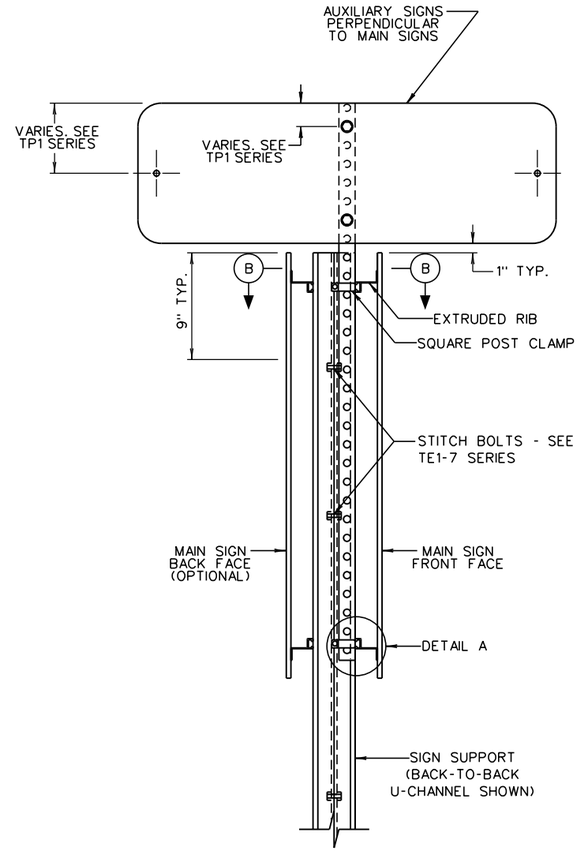

SECTION A-A

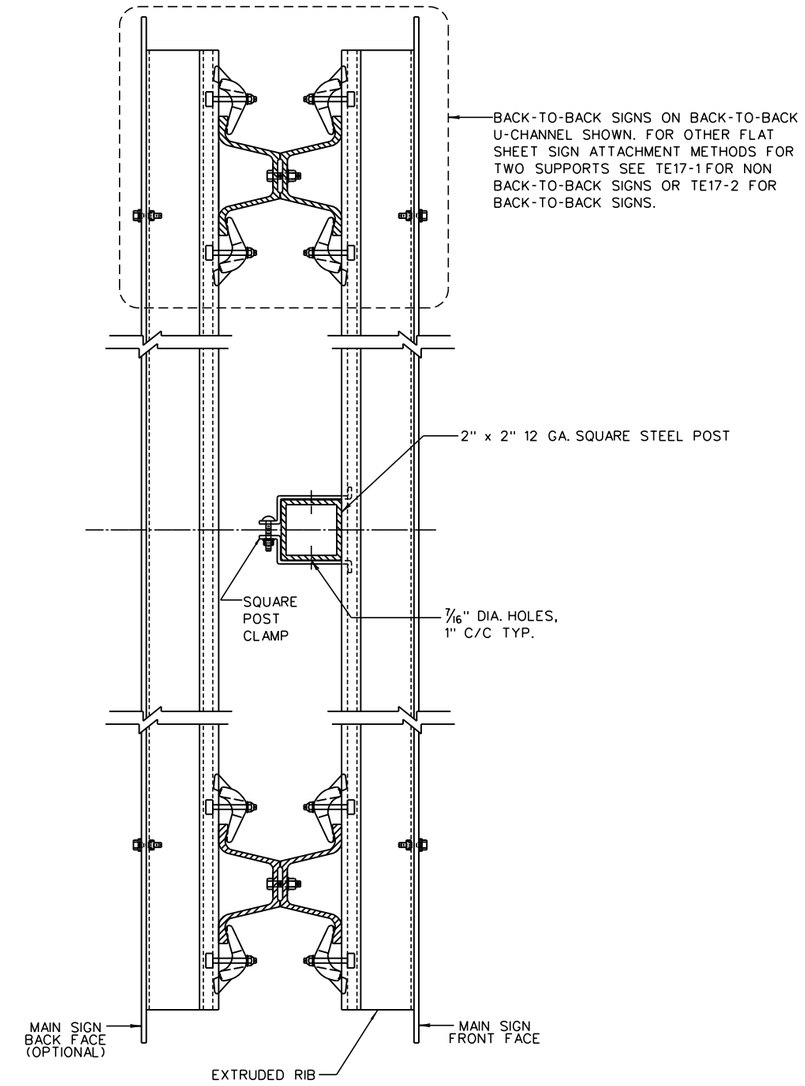

SECTION B-B

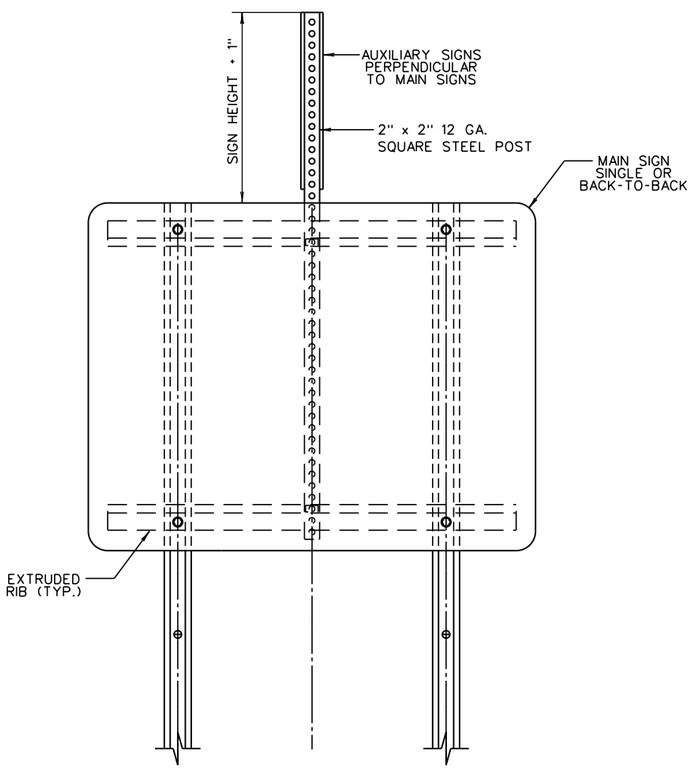

ELEVATION - TWO SUPPORTS

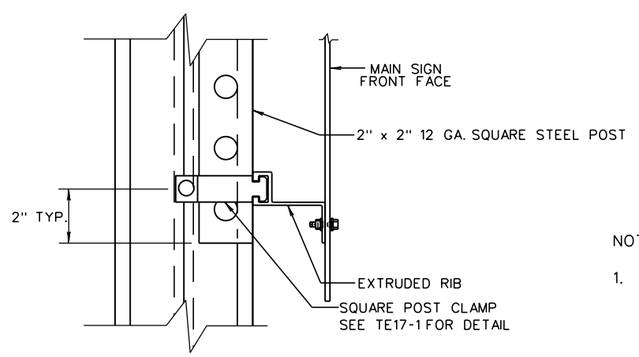

DETAIL A

NOTES:

1. ALL ITEMS SHOWN ON THIS DETAIL SHALL BE IN ACCORDANCE WITH SECTION 657 OF THE WEST VIRGINIA DIVISION OF HIGHWAYS STANDARD SPECIFICATIONS ROADS AND BRIDGES, CURRENT EDITION, AND ALL CURRENT SUPPLEMENTAL SPECIFICATIONS.
2. MAIN SIGNS SHALL BE ATTACHED TO SUPPORTS AS SHOWN ON TE17-1 AND TE17-2.
3. DETAILS DEPICT MAIN SIGNS ATTACHED TO BACK-TO-BACK U-CHANNEL POSTS, BUT ALSO APPLY TO ANY SUPPORTS USING EXTRUDED RIBS FOR SIGN PANEL ATTACHMENT.

WEST VIRGINIA DEPARTMENT OF TRANSPORTATION
DIVISION OF HIGHWAYS
STANDARD DETAIL

PREPARED: 8/2018
REVISION DATE

PERPENDICULAR AUXILIARY SIGN ATTACHMENT DETAILS

TWO SUPPORTS

STANDARD SHEET TE16-1B

TRAFFIC ENGINEERING DIVISION

J04C02C03-STDBDR c
Z:\Projects\WVDOT\Standard Details vol II\New_Sheets\Signing\TE16-1B.dgn
12/19/2018

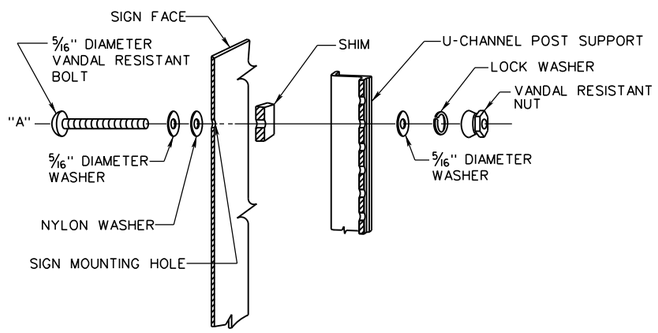

EXPLODED VIEW

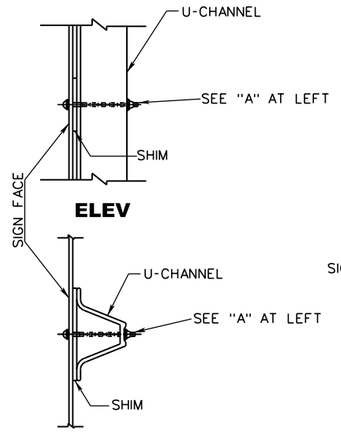

ELEV

TOP VIEW

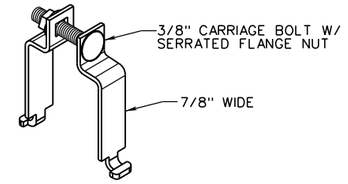

SQUARE POST CLAMP

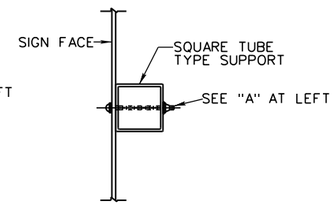

TOP VIEW
SQUARE TUBE ALTERNATE

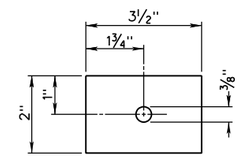

SHIM DETAIL
SEE NOTE 1

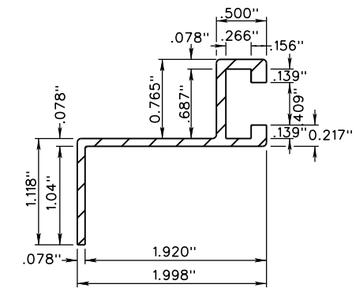

EXTRUDED RIB
NOMINAL DIMENSIONS

NOTES:

1. ALL SIGNS ATTACHED DIRECTLY TO THE FRONT (FLANGE) FACE OF A U-CHANNEL SUPPORT SHALL HAVE A SHIM PLACED BETWEEN THE SIGN SUBSTRATE AND THE U-CHANNEL AT EACH ATTACHMENT LOCATION.
2. ALL FLAT SHEET SIGNS TO BE MOUNTED UPON TWO OR MORE U-CHANNEL OR SQUARE TUBE SUPPORTS, ONE OR MORE STEEL BEAM SUPPORTS, TYPES 1-5 PIPE POSTS FABRICATED WITH THE 1/4 IN. CONNECTION PLATE DETAILED ON TE1-5C, AND TYPES 6-9 PIPE POSTS, SHALL BE ATTACHED TO RIBBING.
3. POST CLIPS SHALL BE USED ON BOTH SUPPORT FLANGES FOR THE TOP AND BOTTOM PIECES OF RIBBING. FOR EACH PIECE OF RIBBING BETWEEN THE TOP AND BOTTOM, ONE POST CLIP SHALL BE USED FOR EACH SUPPORT ALTERNATING BETWEEN OPPOSITE SIDES OF THE SUPPORT. IF ATTACHMENT IS TO ZEE BARS, ONE CLIP SHALL BE USED AT EACH INTERSECTION OF THE RIBBING AND ZEE BAR. THIS ATTACHMENT METHOD SHALL BE USED FOR ATTACHING FLAT SHEET SIGNS TO STEEL BEAM SUPPORTS.
4. THE 1 IN. TYP. DIMENSION FROM THE END OF THE RIBBING TO THE EDGE OF THE SIGN SHALL BE REDUCED OR THE RIBBING SHALL BE EXTENDED BEYOND THE EDGE OF THE SIGN AS NECESSARY IN ORDER FOR THE SIGN TO BE PROPERLY ATTACHED TO THE SUPPORTS. SEE TP4-1 DRAWINGS FOR EXAMPLES.
5. SEE TP1 SERIES FOR FLAT SHEET SIGN PUNCHING INFORMATION.

TYPICAL U-CHANNEL DIRECT MOUNT SIGN TO SINGLE POST

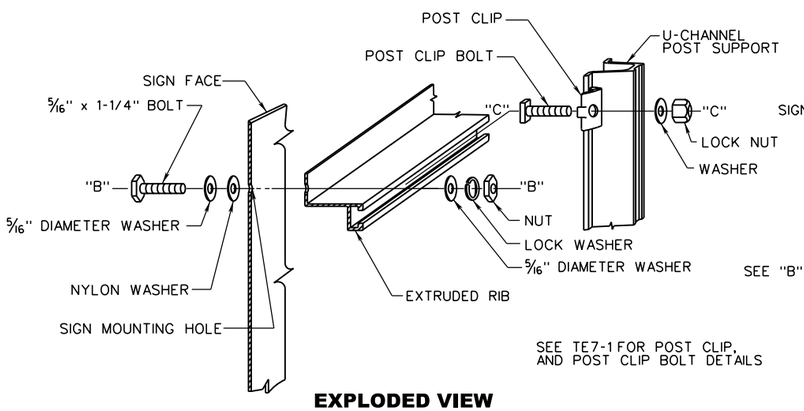

EXPLODED VIEW

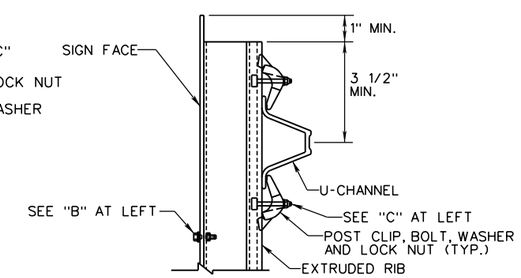

TOP VIEW

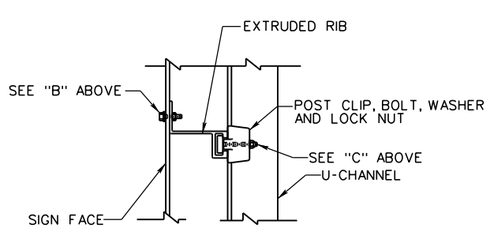

ELEV

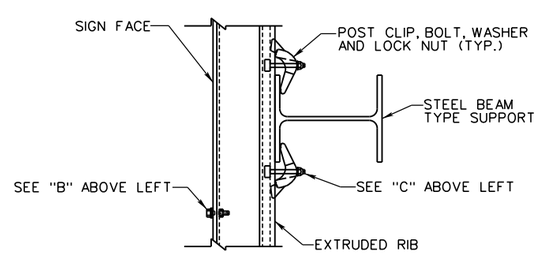

TOP VIEW
STEEL BEAM ALTERNATE

OPTION 1 - WITH POST CLIPS
SEE NOTE 3

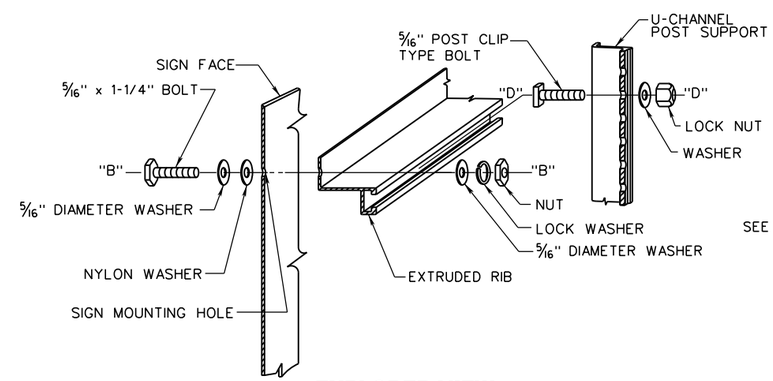

EXPLODED VIEW

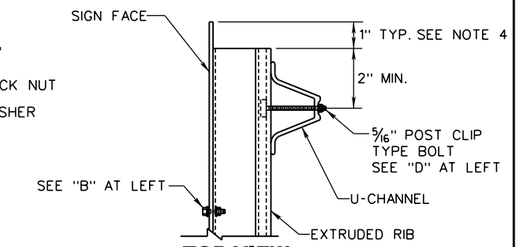

TOP VIEW

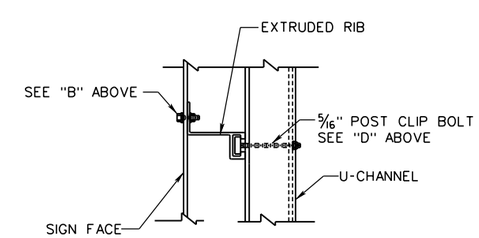

ELEV

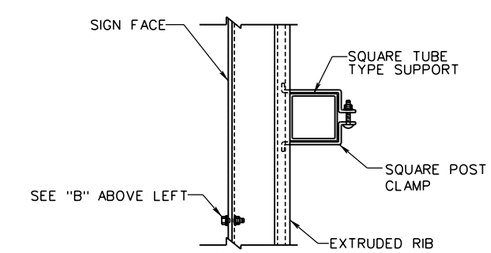

TOP VIEW
SQUARE TUBE ALTERNATE

OPTION 2 - WITHOUT POST CLIPS
THIS OPTION MAY ONLY BE USED WITH U-CHANNEL AND SQUARE TUBE

TYPICAL U-CHANNEL AND RIB ASSEMBLY OPTIONS FOR TWO OR MORE POSTS

WEST VIRGINIA DEPARTMENT OF TRANSPORTATION
DIVISION OF HIGHWAYS
STANDARD DETAIL

PREPARED: 8/2018
REVISION DATE

FLAT SHEET SIGN TO SUPPORT ATTACHMENT

STANDARD SHEET TE17-1

TRAFFIC ENGINEERING DIVISION

J04C02C03-STDBDR c
Z:\Projects\WVDOT\Standard Details vol II\New_Sheets\Signing\TE17-1.dgn
12/19/2018

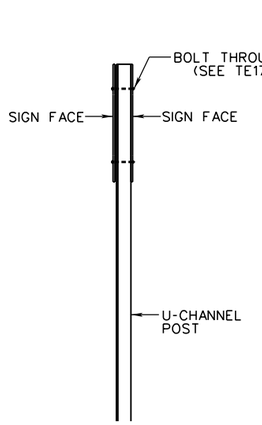

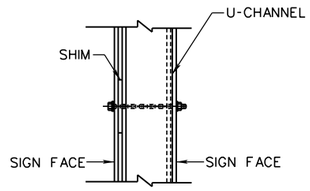

ELEV

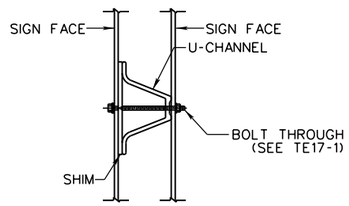

TOP VIEW

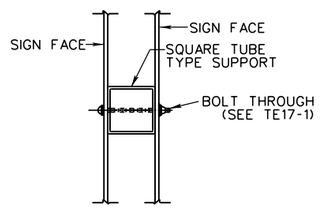

TOP VIEW
SQUARE TUBE ALTERNATE

BACK-TO-BACK SIGN MOUNTING ON SINGLE U-CHANNEL POST

MOUNTING DETAIL FOR BACK-TO-BACK SIGNS,
ALL SHAPES & SIZES
EXCEPT D-16 SIGNS (42"-48" WIDTHS AND
9"-15" HEIGHTS ONLY)

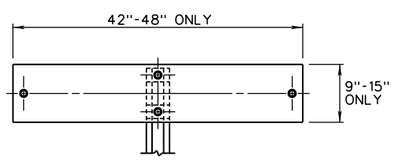

ELEVATION

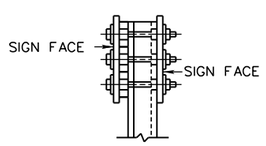

SIDE VIEW

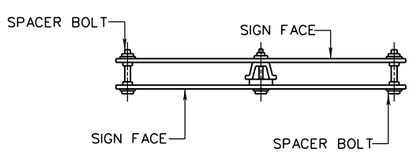

TOP VIEW

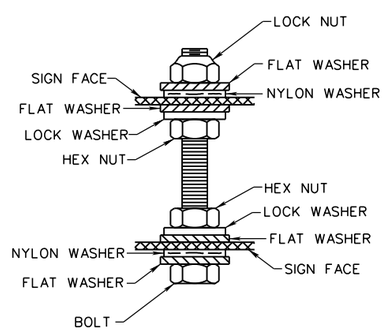

SPACER BOLT

EXCEPTION TO BACK-TO-BACK MOUNTING DETAILS

D16-1 SIGNS (42"-48" WIDTHS AND 9"-15" HEIGHTS ONLY)

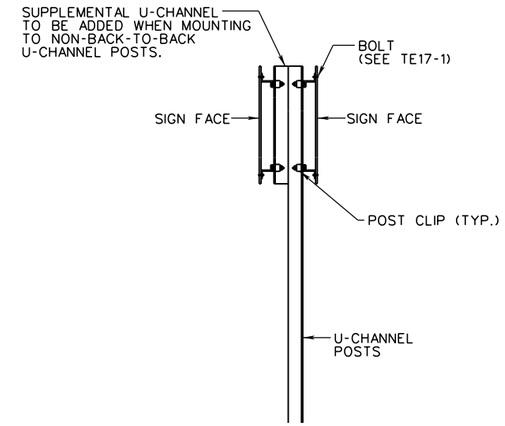

MOUNTING DETAIL FOR BACK-TO-BACK SIGNS,
ALL SHAPES & SIZES

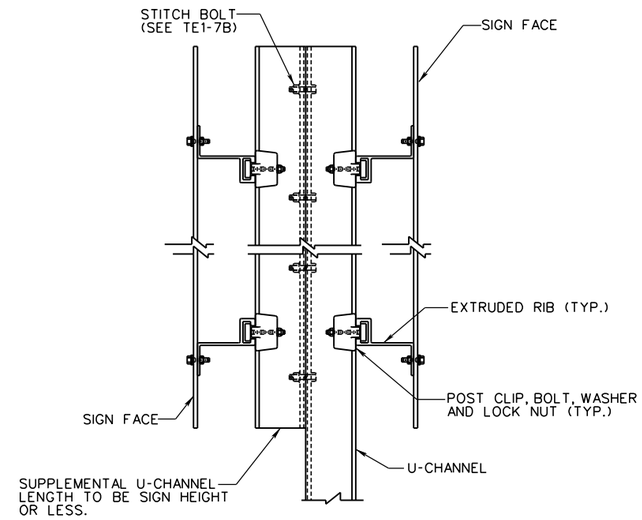

SIDE VIEW

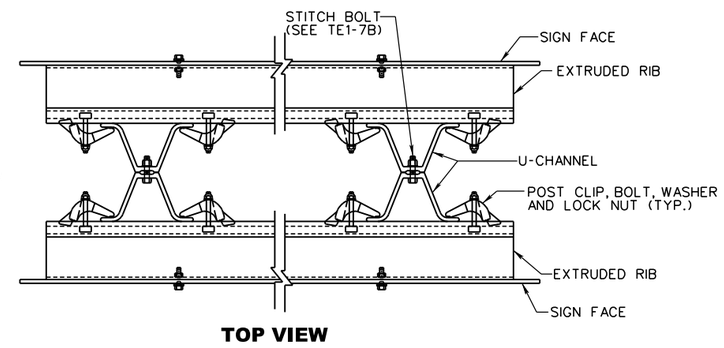

TOP VIEW

BACK-TO-BACK SIGN MOUNTING ON 2 OR MORE U-CHANNEL POSTS

MOUNTING DETAIL FOR BACK-TO-BACK SIGNS,
ALL SHAPES & SIZES

GENERAL NOTES

1. BACK-TO-BACK SIGNS WILL BE MOUNTED IN ACCORDANCE WITH THE ACCOMPANYING DETAIL DRAWINGS. THE ASSOCIATED BOLTS, NUTS, WASHERS AND SHIMS SHALL BE INSTALLED IN ACCORDANCE WITH STANDARD DETAIL TE17-1. NOTE, FOR ASSEMBLIES DIRECT MOUNTED TO THE SUPPORT, AN ADDITIONAL NYLON WASHER WILL BE REQUIRED TO BE ADDED AGAINST THE SIGN FACE ON THE BACK SIDE OF THE SUPPORT.
2. ALL MOUNTINGS SHOWN ARE FOR ASSEMBLIES CONSISTING OF BACK-TO-BACK MOUNTED SIGNS ON U-CHANNEL POSTS.
3. ALL BOLTS, NUTS AND WASHERS USED TO MOUNT THE SIGN AND SIGN ASSEMBLIES WILL BE 5/16 IN. DIAMETER.
4. THE TOP OF THE POST SUPPORT SHALL EXTEND 2 IN. OR LESS FROM THE EDGE OF THE SIGN, BUT NOT BEYOND ANY EDGE OF THE SIGN.
5. FOR BACK-TO-BACK SIGNS MOUNTED TO RIBBING, THE "WITH POST CLIPS" OPTION SHOWN ON SHEET TE17-1 SHALL BE USED FOR ATTACHMENT OF THE SIGNS TO THE SUPPORTS.

WEST VIRGINIA DEPARTMENT OF TRANSPORTATION
DIVISION OF HIGHWAYS
STANDARD DETAIL

PREPARED: 8/2018
REVISION DATE

MOUNTING DETAILS FOR BACK-TO-BACK FLAT SHEET SIGNS

STANDARD SHEET TE17-2

TRAFFIC ENGINEERING DIVISION

12/19/2018

Z:\Projects\WVDOT\Standard Details vol II\New_Sheets\Signing\TE17-2.dgn

J04C02C03-STDBOR c

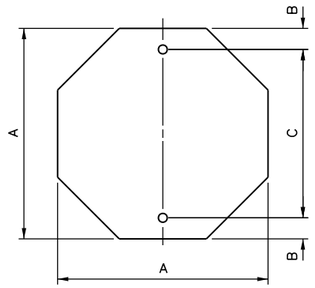

DIRECT MOUNT TO U-CHANNEL OR TYPE 1 CLAMPS

A	B	C	AREA (FT²)	
			SURFACE	MATERIAL
18	3	12	1.86	2.25
24	3	18	3.31	4.00
30	3	24	5.18	6.25
36	3	30	7.46	9.00

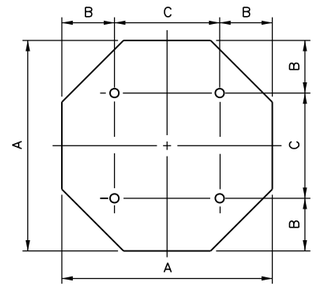

MOUNT TO EXTRUDED RIB

A	B	C	AREA (FT²)	
			SURFACE	MATERIAL
36	8	20	7.46	9.00
48	9	30	13.26	16.00

OCTAGON

DIRECT MOUNT TO U-CHANNEL OR TYPE 1 CLAMPS

A	B	C	AREA (FT²)	
			SURFACE	MATERIAL
30	21	3	4.69	6.25
36	24	3	6.75	9.00

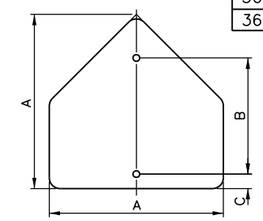

MOUNT TO EXTRUDED RIB

A	B	C	D	E	AREA (FT²)	
					SURFACE	MATERIAL
48	18	6	9	30	12.00	16.00

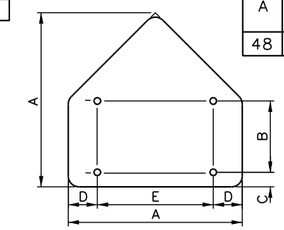

PENTAGON

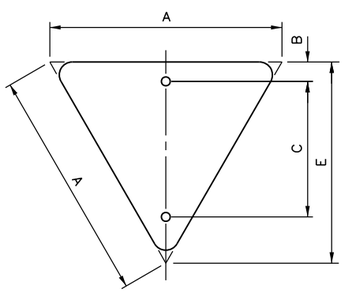

DIRECT MOUNT TO U-CHANNEL OR TYPE 1 CLAMPS

A	B	C	D	E	AREA (FT²)*
24	2	14	1.5	20.8	1.73
30	3	18	1.5	26.0	2.71
36	3	21	2	31.2	3.90

* SURFACE AREA - MATERIAL AREA

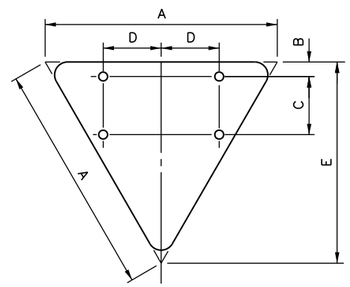

MOUNT TO EXTRUDED RIB

A	B	C	D	E	AREA (FT²)*
48	3	12	12	41.6	6.93
60	3	18	15	52.0	10.83

* SURFACE AREA - MATERIAL AREA

EQUILATERAL TRIANGLE

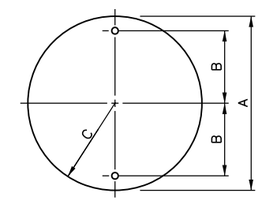

DIRECT MOUNT TO U-CHANNEL OR TYPE 1 CLAMPS

A	B	C	AREA (FT²)	
			SURFACE	MATERIAL
36	15	18	7.06	9.00

CIRCLE

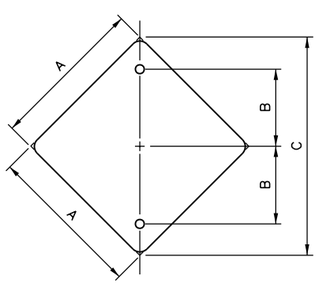

DIRECT MOUNT TO U-CHANNEL OR TYPE 1 CLAMPS

A	B	C	AREA (FT²)*	
18	9	25.5	2.25	**
24	12	33.9	4.00	
30	15	42.4	6.25	
36	18	50.9	9.00	

* SURFACE AREA - MATERIAL AREA

** N/A TO XR-9, SEE FAB MANUAL.

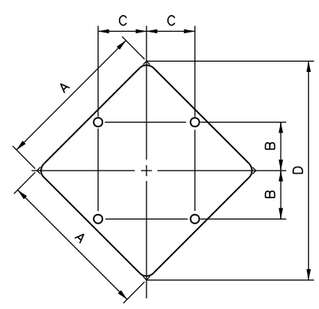

MOUNT TO EXTRUDED RIB

A	B	C	D	AREA (FT²)*
36	10	10	50.9	9.00
48	12	15	67.9	16.00
60	18	18	84.9	25.00

* SURFACE AREA - MATERIAL AREA

DIAMOND

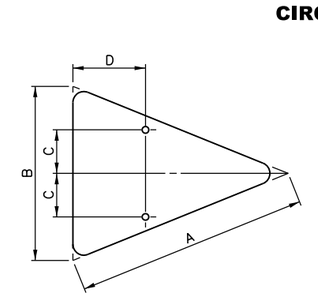

DIRECT MOUNT TO U-CHANNEL OR TYPE 1 CLAMPS

A	B	C	AREA (FT²)*
48	36	9	15	5.56

* SURFACE AREA - MATERIAL AREA

ISOSCELES TRIANGLE

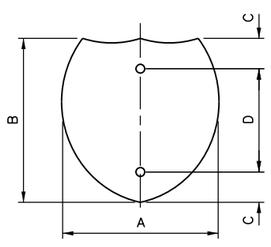

DIRECT MOUNT TO U-CHANNEL OR TYPE 1 CLAMPS

A	B	C	D	AREA (FT²)	
				SURFACE	MATERIAL
24	24	3	18	3.07	4.00
30	24	3	18	4.00	5.00
36	36	6	24	7.20	9.00

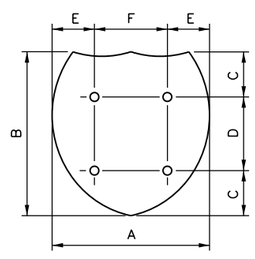

MOUNT TO EXTRUDED RIB

A	B	C	D	E	F	AREA (FT²)	
						SURFACE	MATERIAL
24	24	6	12	5.5	13	3.07	4.00
30	24	6	12	6	18	4.00	5.00
36	36	7.5	21	7.5	21	7.20	9.00
45	36	7.5	21	10	25	9.00	11.25
48	48	9	30	9	30	12.79	16.00
60	48	9	30	12	36	16.00	20.00

INTERSTATE SHIELD

NOTES:

1. ALL DIMENSIONS SHOWN ARE IN INCHES, AREAS ARE IN SQUARE FEET.
2. ALL BOLT HOLES SHALL BE 3/8 IN. IN DIAMETER AND MAY BE DRILLED OR PUNCHED TO FINISHED SIZE.
3. DIMENSIONS BETWEEN BOLT HOLES SHALL BE TO WITHIN 1/32 IN.
4. SURFACE AREA INFORMATION SHOWN IS FOR USE WHEN DETERMINING SUPPORT SIZE. MATERIAL AREA INFORMATION IS FOR DETERMINING FLAT SHEET QUANTITIES.
5. CORNER RADIUS FOR SIGN BLANK TO BE 1.5 IN. UNLESS STATED OTHERWISE IN THE SIGN FABRICATION DETAILS MANUAL.
6. SEE TE17-1 FOR DETAILS FOR MOUNTING FLAT SHEET SIGNS TO SINGLE U-CHANNEL OR EXTRUDED RIBS. SEE TE9-1 FOR DETAILS FOR MOUNTING FLAT SHEET SIGNS TO TYPE 1 CLAMPS.

WEST VIRGINIA DEPARTMENT OF TRANSPORTATION
DIVISION OF HIGHWAYS
STANDARD DETAIL

PREPARED: 8/2018
REVISION DATE

TYPICAL SIGN BLANK PUNCHING FOR STANDARD SIGNS

NON-SQUARE OR RECTANGULAR

STANDARD SHEET TP1-1A

TRAFFIC ENGINEERING DIVISION

12/19/2018

Z:\Projects\WVDOT\Standard Details vol II\New_Sheets\Signing\TP1-1A.dgn

J04C02C03-STDBOR c

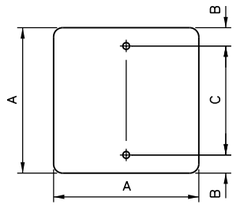

DIRECT MOUNT TO U-CHANNEL OR TYPE 1 CLAMP

A	B	C	AREA (FT^2)
6	0.5	5	0.25
18	2	14	2.25
24	1.5	21	4.00
30	1.5	27	6.25
36	2	32	9.00

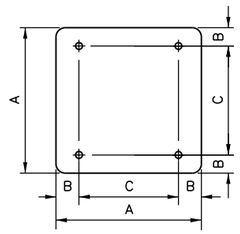

MOUNT TO RIBBING

A	B	C	AREA (FT^2)
24	3	18	4.00
30	3	24	6.25
36	6	24	9.00
42	6	30	12.25
48	6	36	16.00

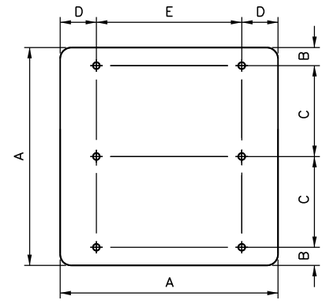

MOUNT TO RIBBING

A	B	C	D	E	AREA (FT^2)
60	6	24	12	36	25.00

SQUARE

NOTES:

1. ALL DIMENSIONS SHOWN ARE IN INCHES, AREAS ARE IN SQUARE FEET.
2. ALL BOLT HOLES SHALL BE 3/8 IN. IN DIAMETER AND MAY BE DRILLED OR PUNCHED TO FINISHED SIZE.
3. DIMENSIONS BETWEEN BOLT HOLES SHALL BE TO WITHIN 1/32 IN.
4. CORNER RADIUS FOR SIGN BLANK TO BE 1.5 IN. UNLESS STATED OTHERWISE IN THE SIGN FABRICATION DETAILS MANUAL.
5. SEE TE17-1 FOR DETAILS FOR MOUNTING FLAT SHEET SIGNS TO SINGLE U-CHANNEL OR EXTRUDED RIBS. SEE TE9-1 FOR DETAILS FOR MOUNTING FLAT SHEET SIGNS TO TYPE 1 CLAMPS.

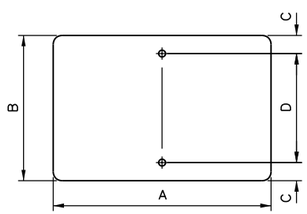

DIRECT MOUNT TO U-CHANNEL OR TYPE 1 CLAMP

A	B	C	D	AREA (FT^2)
12	6	0.5	5	0.50
12	9	1.5	6	0.75
15	6	0.5	5	0.63
18	12	1.5	9	1.50
21	15	1.5	12	2.19
24	12	1.5	9	2.00
24	18	3	12	3.00
28	21	3	15	4.08
30	15	1.5	12	3.13
30	18	3	12	3.75
30	24	3	18	5.00
36	12	1.5	9	3.00
36	18	3	12	4.50
36	21	3	15	5.25
36	24	3	18	6.00
36	30	3	24	7.50

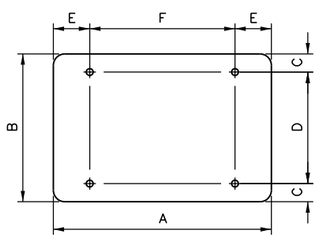

MOUNT TO RIBBING

A	B	C	D	E	F	AREA (FT^2)
21	15	3	9	3	15	2.19
24	12	2	8	3	18	2.00
24	18	3	12	3	18	3.00
28	21	3	15	3	22	4.08
30	15	3	9	3	24	3.13
30	24	3	18	3	24	5.00
36	12	1.5	9	6	24	3.00
36	18	3	12	6	24	4.50
36	21	3	15	6	24	5.25
36	24	3	18	6	24	6.00
36	30	3	24	6	24	7.50
42	30	3	24	9	24	8.75
42	36	6	24	9	24	10.50
45	36	6	24	9	27	11.25
48	18	3	12	9	30	6.00
48	24	3	18	9	30	8.00
48	30	3	24	9	30	10.00
48	36	6	24	9	30	12.00
60	24	3	18	12	36	10.00
60	30	3	24	12	36	12.50
60	36	6	24	12	36	15.00

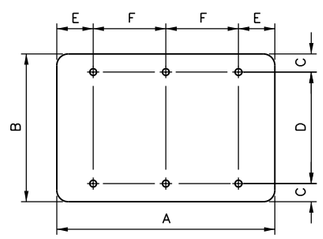

MOUNT TO RIBBING

A	B	C	D	E	F	AREA (FT^2)
60	48	6	36	6	24	20.00

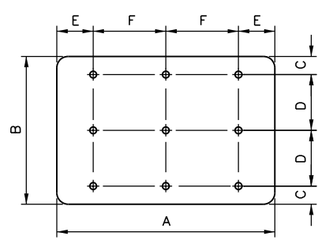

MOUNT TO RIBBING

A	B	C	D	E	F	AREA (FT^2)
72	60	6	24	6	30	30.00

HORIZONTAL RECTANGLE

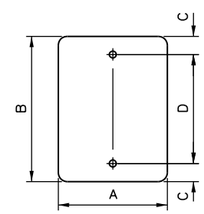

DIRECT MOUNT TO U-CHANNEL OR TYPE 1 CLAMP

A	B	C	D	AREA (FT^2)
4	8	1.5	5	0.22
9	12	1.5	9	0.75
9	24	3	18	1.50
12	18	1.5	15	1.50
12	36	3	30	3.00
12	42	6	30	3.50
12	48	6	36	4.00
12	54	6	42	4.50
18	24	3	18	3.00
24	30	3	24	5.00
24	36	3	30	6.00
24	42	6	30	7.00
30	36	3	30	7.50
30	42	6	30	8.75
30	48	6	36	10.00
36	42	6	30	10.50
36	48	6	36	12.00

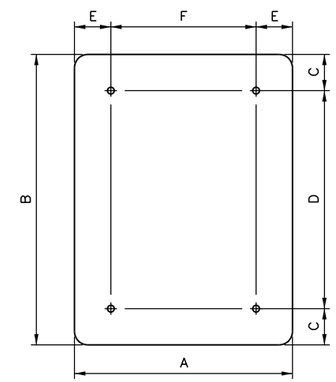

MOUNT TO RIBBING

A	B	C	D	E	F	AREA (FT^2)
30	36	3	30	6	18	7.50
36	42	6	30	6	24	10.50
36	48	6	36	6	24	12.00
42	48	6	36	9	24	14.00

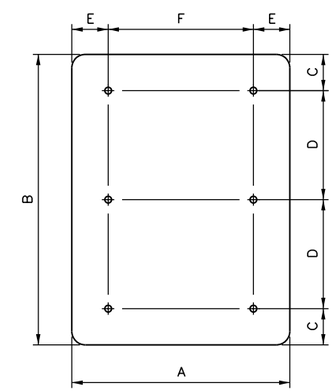

MOUNT TO RIBBING

A	B	C	D	E	F	AREA (FT^2)
36	60	6	24	6	24	15.00
36	78	9	30	6	24	19.50
48	60	6	24	9	30	20.00

VERTICAL RECTANGLE

WEST VIRGINIA DEPARTMENT OF TRANSPORTATION
DIVISION OF HIGHWAYS
STANDARD DETAIL

PREPARED: 8/2018
REVISION DATE

TYPICAL SIGN BLANK PUNCHING FOR STANDARD SIGNS

SQUARE OR RECTANGULAR

STANDARD SHEET TP1-1B

TRAFFIC ENGINEERING DIVISION

12/19/2018

Z:\Projects\WVDOT\Standard Details vol II\New_Sheets\Signing\TP1-1B.dgn

J04C02C03-STDBOR c

NOTES:

1. THE INFORMATION HERE IS FOR USE WITH SIGNS OF SIZES THAT ARE NOT INCLUDED ON TP1-1B.
2. THE HEIGHT OF HORIZONTAL RECTANGLE SIGNS SHALL NOT EXCEED 60 IN. TALLER SIGNS ARE TO BE MADE USING EXTRUDED PANEL SUBSTRATE.
3. ALL BOLT HOLES SHALL BE 3/8 IN. IN DIAMETER AND MAY BE DRILLED OR PUNCHED TO FINISHED SIZE.
4. DIMENSIONS BETWEEN BOLT HOLES SHALL BE TO WITHIN 1/32 IN.
5. CORNER RADIUS FOR SIGN BLANK MATERIAL SHALL BE 1.5 IN.
6. SEE TE17-1 FOR DETAILS FOR MOUNTING FLAT SHEET SIGNS TO SINGLE U-CHANNEL OR EXTRUDED RIBS. SEE TE9-1 FOR DETAILS FOR MOUNTING FLAT SHEET SIGNS TO TYPE 1 CLAMPS.

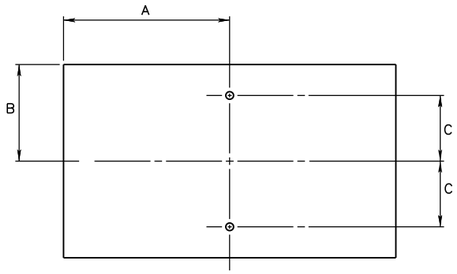

LESS THAN 36" WIDTH

DIRECT MOUNT TO A SINGLE U-CHANNEL OR TYPE 1 CLAMPS ONLY

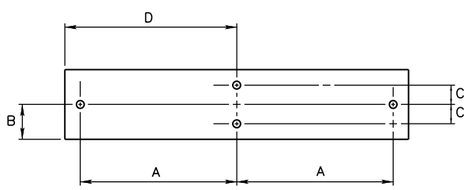

D16-1 42" - 48" WIDTHS ONLY AND 9" - 15" HEIGHTS ONLY

DIRECT MOUNT TO A SINGLE U-CHANNEL SUPPORT ONLY. SEE TE17-2 FOR SPECIFIC MOUNTING DETAILS.

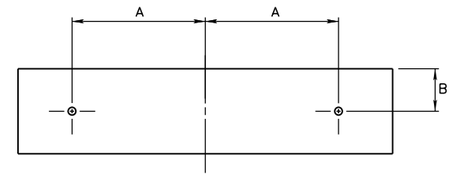

LESS THAN 18" HEIGHT

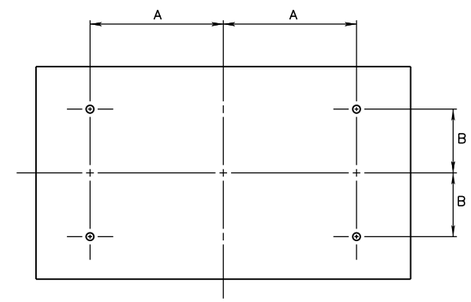

LESS THAN 60" HEIGHT

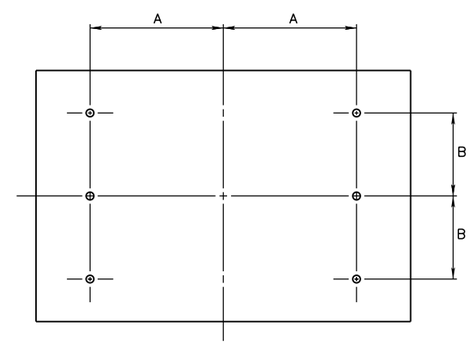

60" HEIGHT

36" - 66" WIDTHS

MOUNT TO EXTRUDED RIBS. D16-1 SIGNS 42"-48" IN WIDTH AND 9"-15" IN HEIGHT ARE EXCLUDED.

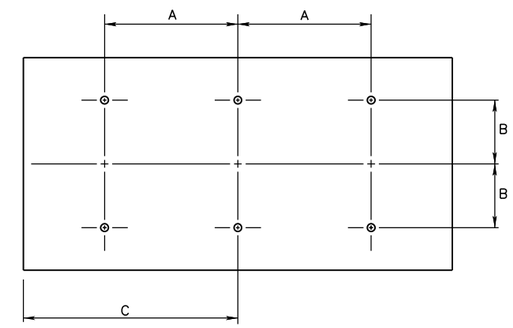

LESS THAN 60" HEIGHT

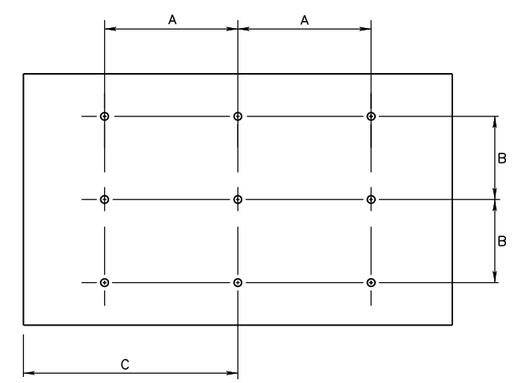

60" HEIGHT

MORE THAN 66" WIDTH

MOUNT TO EXTRUDED RIBS

SIGN SHAPE	SIGN SIZE		DIMENSION			
	WIDTH	HEIGHT	A	B	C	D
* HORIZONTAL RECTANGLE	LESS THAN 36"	6" OR OVER BUT UNDER 36"	WIDTH / 2	HEIGHT / 2	HEIGHT - 3" / 2	
	36"-66"	6" OR OVER BUT UNDER 18"	WIDTH - 6" / 2	HEIGHT / 2	____	____
		18" OR OVER BUT UNDER 30"	WIDTH - 6" / 2	HEIGHT - 6" / 2	____	____
		30" OR OVER BUT UNDER 48"	WIDTH - 12" / 2	HEIGHT - 12" / 2	____	____
		48" OR MORE BUT UNDER 60"	WIDTH - 12" / 2	HEIGHT - 18" / 2	____	____
		60"	WIDTH - 12" / 2	HEIGHT - 12" / 2	____	____
	MORE THAN 66"	18" OR OVER BUT UNDER 30"	WIDTH - 24" / 2	HEIGHT - 6" / 2	WIDTH / 2	____
		30" OR OVER BUT UNDER 48"	WIDTH - 24" / 2	HEIGHT - 12" / 2	WIDTH / 2	____
		48" OR OVER BUT UNDER 60"	WIDTH - 24" / 2	HEIGHT - 18" / 2	WIDTH / 2	____
		60"	WIDTH - 12" / 2	HEIGHT - 12" / 2	WIDTH / 2	____

* EXCLUDING: D16-1 SIGNS WITH WIDTHS OF 42" - 48".

D16-1	42" - 48"	9" - 15"	WIDTH - 3" / 2	HEIGHT / 2	HEIGHT - 3" / 2	WIDTH / 2

WEST VIRGINIA DEPARTMENT OF TRANSPORTATION
DIVISION OF HIGHWAYS
STANDARD DETAIL

PREPARED: 8/2018

REVISION DATE

TYPICAL SIGN BLANK PUNCHING FOR NON-STANDARD SIGNS

HORIZONTAL RECTANGULAR

STANDARD SHEET TP1-2A

TRAFFIC ENGINEERING DIVISION

12/19/2018

Z:\Projects\WVDOT\Standard Details vol II\New_Sheets\Signing\TP1-2A.dgn

J04C02C03-STDBDR c

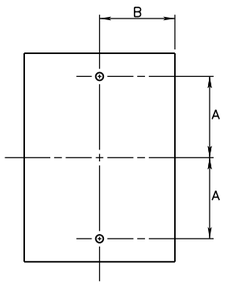

UP TO 54" HEIGHTS

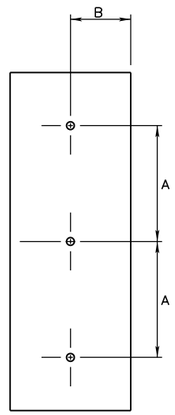

60" HEIGHT OR MORE

LESS THAN 36" WIDTH

DIRECT MOUNT TO A SINGLE U-CHANNEL OR TYPE 1 CLAMPS ONLY

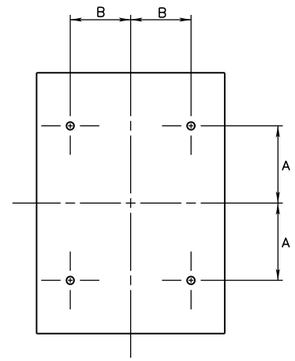

UP TO 54" HEIGHTS

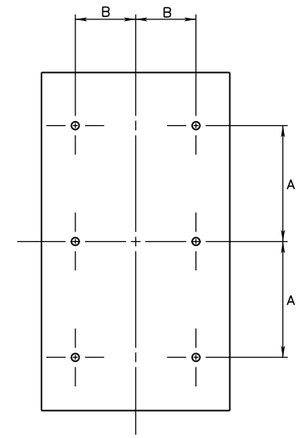

60" HEIGHT OR MORE

36" - 60" WIDTH

MOUNT TO EXTRUDED RIBS

NOTES:

1. THE INFORMATION HERE IS FOR USE WITH SIGNS OF SIZES THAT ARE NOT INCLUDED ON TP1-1B.
2. THE WIDTH OF VERTICAL RECTANGLE SIGNS SHALL NOT EXCEED 60". WIDER SIGNS ARE TO BE MADE USING EXTRUDED PANEL SUBSTRATE.
3. ALL BOLT HOLES SHALL BE 3/8 IN. IN DIAMETER AND MAY BE DRILLED OR PUNCHED TO FINISHED SIZE.
4. DIMENSIONS BETWEEN BOLT HOLES SHALL BE TO WITHIN 1/32 IN.
5. CORNER RADIUS FOR SIGN BLANK MATERIAL SHALL BE 1.5 IN.
6. SEE TE17-1 FOR DETAILS FOR MOUNTING FLAT SHEET SIGNS TO SINGLE U-CHANNEL OR EXTRUDED RIBS. SEE TE9-1 FOR DETAILS FOR MOUNTING FLAT SHEET SIGNS TO TYPE 1 CLAMPS.

SIGN SHAPE	SIGN SIZE		DIMENSION			
	WIDTH	HEIGHT	A	B	C	D
VERTICAL RECTANGLE	LESS THAN 36"	6" OR OVER BUT UNDER 18"	(HEIGHT - 3")/2	WIDTH/2	____	____
		18" OR OVER BUT UNDER 30"	(HEIGHT - 6")/2	WIDTH/2	____	____
		30" OR OVER BUT UNDER 48"	(HEIGHT - 12")/2	WIDTH/2	____	____
		48" OR MORE BUT UNDER 60"	(HEIGHT - 18")/2	WIDTH/2	____	____
		60" OR MORE	(HEIGHT - 12")/2	WIDTH/2	____	____
	36"-60"	42" OR OVER BUT UNDER 60"	(HEIGHT - 18")/2	(WIDTH - 12")/2	____	____
		60" OR MORE	(HEIGHT - 12")/2	(WIDTH - 12")/2	____	____

WEST VIRGINIA DEPARTMENT OF TRANSPORTATION
DIVISION OF HIGHWAYS
STANDARD DETAIL

PREPARED: 8/2018

REVISION DATE

TYPICAL SIGN BLANK PUNCHING FOR NON-STANDARD SIGNS

VERTICAL RECTANGULAR

STANDARD SHEET TP1-2B

TRAFFIC ENGINEERING DIVISION

12/19/2018

Z:\Projects\WVDOT\Standard Details vol II\New_Sheets\Signing\TP1-2B.dgn

J04C02C03-STDBOR c

1. 7 FT. MIN, IF ASSEMBLY IS INSTALLED ALONG A DESIGNATED PEDESTRIAN WALKWAY (I.E. SIDEWALK), IF ASSEMBLY IS INSTALLED AT A LOCATION WHERE ROADSIDE PARKING IS PREVALENT, OR IF THE ASSEMBLY IS INSTALLED ON STEEL BEAM SLIP BASE TYPE SIGN SUPPORTS. IF THE ASSEMBLY IS INSTALLED ON STEEL BEAM SLIP BASE TYPE SIGN SUPPORTS, THE PLAQUE SHALL BE MOUNTED ABOVE THE SUPPORT SAW CUTS.

   6 FT. MIN. IS APPLICABLE TO U-CHANNEL SUPPORTS.

   EXAMPLES OF SIGNS WITH STANDARD SECONDARY PLAQUES ARE R1-1 WITH R6-3 PLAQUE, R4-7 WITH XR-9 PLAQUE, W1-2 WITH W13-1 PLAQUE, AND ROUTE MARKERS WITH ARROW OR LANE ASSIGNMENT PLAQUES.

2. 7 FT. MIN. IF ASSEMBLY IS INSTALLED ALONG A DESIGNATED PEDESTRIAN WALKWAY (I.E. SIDEWALK), OR IF ASSEMBLY IS INSTALLED AT A LOCATION WHERE ROADSIDE PARKING IS PREVALENT.

   IF THE ASSEMBLY SUPPORTS ARE STEEL BEAM TYPE AND ANY REQUIRED PLAQUES ARE EACH INDEPENDENTLY MOUNTED ON ONE SUPPORT ONLY, THE PLAQUE(S) MAY BE MOUNTED BELOW THE SAW CUT AND THE 5 FT. MIN. HEIGHT MAY BE USED. IF ANY PLAQUE IS MOUNTED TO MULTIPLE SUPPORTS OR PLAQUES ARE INTERCONNECTED TO ACCOMMODATE MORE PLAQUES THAN AVAILABLE SUPPORTS AS SHOWN, THE PLAQUES SHALL BE MOUNTED ABOVE THE SAW CUT AND THE 7 FT. MIN. HEIGHT SHALL BE USED.

   6 FT. MIN. IS APPLICABLE TO U-CHANNEL SUPPORTS.

3. THE HEIGHT REQUIREMENTS SHOWN REPRESENT THE MINIMUM REQUIRED CLEARANCE FROM THE BOTTOM OF THE SIGN TO GROUND LEVEL. GREATER MOUNTING HEIGHTS SHALL BE USED IF NECESSARY IN ORDER TO MEET THE APPLICABLE MINIMUM MOUNTING HEIGHT ABOVE THE ROADWAY EDGE LINE AS SHOWN FOR FILL SECTIONS. THE MAXIMUM MOUNTING HEIGHT ABOVE THE ROADWAY EDGE LINE AS SHOWN FOR FILL SECTIONS SHALL BE EXCEEDED IF NECESSARY IN ORDER TO MEET THE APPLICABLE MINIMUM VALUE SHOWN HERE.

   IF THE ASSEMBLY IS INSTALLED ON STEEL BEAM OR TYPE 1-5 PIPE POST TYPE SIGN SUPPORTS, THE 7 FT. MIN. CLEARANCE SHALL BE MET.

   THE 6 FT. MIN. CLEARANCE IS APPLICABLE TO U-CHANNEL SUPPORTS.

   THE MINIMUM CLEARANCE MAY BE REDUCED TO 3 FT. IF ONE OF THE FOLLOWING REQUIREMENTS ARE MET IN REGARDS TO ALL NEARBY ROADWAYS:
   - THE ASSEMBLY IS OUTSIDE OF THE CLEAR ZONE
   - THE ASSEMBLY IS PROTECTED FROM ERRANT VEHICLES BY GUARDRAIL OR CONCRETE BARRIER PROVIDED THAT PROPER CONSIDERATION IS GIVEN TO THE BARRIER LENGTH OF NEED POINT AND THE ANGLE OF DEPARTURE OF THE ERRANT VEHICLE PER DESIGN DIRECTIVE 662 (USE THE ANGLE SPECIFIED FOR NHS PROJECTS). ALSO, SEE SHEET TP3-1C.

4. THE HEIGHT REQUIREMENTS SHOWN REPRESENT THE MINIMUM REQUIRED CLEARANCE FROM THE BOTTOM OF THE SIGN TO GROUND LEVEL. GREATER MOUNTING HEIGHTS SHALL BE USED IF NECESSARY IN ORDER TO MEET THE APPLICABLE MINIMUM MOUNTING HEIGHT ABOVE THE ROADWAY EDGE LINE AS SHOWN FOR FILL SECTIONS. THE MAXIMUM MOUNTING HEIGHT ABOVE THE ROADWAY EDGE LINE AS SHOWN FOR FILL SECTIONS SHALL BE EXCEEDED IF NECESSARY IN ORDER TO MEET THE APPLICABLE MINIMUM VALUE SHOWN HERE.

   IF THE ASSEMBLY IS INSTALLED ON STEEL BEAM TYPE SIGN SUPPORTS, THE PLAQUE SHALL BE MOUNTED ABOVE THE SUPPORT SAW CUTS AND THE 7 FT. MIN. CLEARANCE SHALL APPLY.

   THE 6 FT. MIN. CLEARANCE IS APPLICABLE TO U-CHANNEL SUPPORTS.

   THE MINIMUM CLEARANCE MAY BE REDUCED TO 3 FT. IF ONE OF THE FOLLOWING REQUIREMENTS ARE MET IN REGARDS TO ALL NEARBY ROADWAYS:
   - THE ASSEMBLY IS OUTSIDE OF THE CLEAR ZONE
   - THE ASSEMBLY IS PROTECTED FROM ERRANT VEHICLES BY GUARDRAIL OR CONCRETE BARRIER PROVIDED THAT PROPER CONSIDERATION IS GIVEN TO THE BARRIER LENGTH OF NEED POINT AND THE ANGLE OF DEPARTURE OF THE ERRANT VEHICLE PER DESIGN DIRECTIVE 662 (USE THE ANGLE SPECIFIED FOR NHS PROJECTS). ALSO, SEE SHEET TP3-1C.

5. THE HEIGHT REQUIREMENTS SHOWN REPRESENT THE MINIMUM REQUIRED CLEARANCE FROM THE BOTTOM OF THE SIGN TO GROUND LEVEL. GREATER MOUNTING HEIGHTS SHALL BE USED IF NECESSARY IN ORDER TO MEET THE APPLICABLE MINIMUM MOUNTING HEIGHT ABOVE THE ROADWAY EDGE LINE AS SHOWN FOR FILL SECTIONS. THE MAXIMUM MOUNTING HEIGHT ABOVE THE ROADWAY EDGE LINE AS SHOWN FOR FILL SECTIONS SHALL BE EXCEEDED IF NECESSARY IN ORDER TO MEET THE APPLICABLE MINIMUM VALUE SHOWN HERE.

   IF THE ASSEMBLY SUPPORTS ARE STEEL BEAM TYPE AND ANY REQUIRED PLAQUES ARE EACH INDEPENDENTLY MOUNTED ON ONE SUPPORT ONLY, THE PLAQUE(S) MAY BE MOUNTED BELOW THE SAW CUT AND THE 5 FT. MIN. HEIGHT MAY BE USED. IF ANY PLAQUE IS MOUNTED TO MULTIPLE SUPPORTS OR PLAQUES ARE INTERCONNECTED TO ACCOMMODATE MORE PLAQUES THAN AVAILABLE SUPPORTS AS SHOWN, THE PLAQUES SHALL BE MOUNTED ABOVE THE SAW CUT AND THE 7 FT. MIN. HEIGHT SHALL BE USED.

   THE 7 FT. MIN. CLEARANCE SHALL APPLY TO THE PRIMARY SIGN IF THE ASSEMBLY IS INSTALLED ON STEEL BEAM OR TYPE 1-5 PIPE POST TYPE SIGN SUPPORTS.

   THE 6 FT. MIN. CLEARANCES ARE APPLICABLE TO ASSEMBLIES ON U-CHANNEL SUPPORTS.

   THESE MINIMUM CLEARANCES MAY BE REDUCED TO 3 FT. IF ONE OF THE FOLLOWING REQUIREMENTS ARE MET IN REGARDS TO ALL NEARBY ROADWAYS:
   - THE ASSEMBLY IS OUTSIDE OF THE CLEAR ZONE
   - THE ASSEMBLY IS PROTECTED FROM ERRANT VEHICLES BY GUARDRAIL OR CONCRETE BARRIER PROVIDED THAT PROPER CONSIDERATION IS GIVEN TO THE BARRIER LENGTH OF NEED POINT AND THE ANGLE OF DEPARTURE OF THE ERRANT VEHICLE PER DESIGN DIRECTIVE 662 (USE THE ANGLE SPECIFIED FOR NHS PROJECTS). ALSO, SEE SHEET TP3-1C.

   6. REGARDLESS OF THE SHOULDER WIDTH, SIGNS 1 FT. OR LESS IN WIDTH SHALL BE MOUNTED A MIN. OF 1 FT. ABOVE THE BARRIER OR AT THE MINIMUM HEIGHT NECESSARY TO CLEAR THE TOP OF THE BARRIER BRACKET USED TO INSTALL THE ASSEMBLY, WHICHEVER IS GREATER.

   THE MINIMUM MOUNTING HEIGHT ABOVE THE EDGE LINES FOR ALL OTHER SIGNS SHALL BE BASED ON THE MAXIMUM SIGN WIDTH AND THE DESIGN SHOULDER WIDTH PER THE FOLLOWING. IN NO CASE SHALL THE SIGN WIDTH EXCEED 4 FT., WITH THE EXCEPTION OF 48 IN. DIAMONDS:

   - DESIGN SHOULDER WIDTH GREATER THAN 4 FT.: THE MINIMUM MOUNTING HEIGHT FOR ASSEMBLIES HAVING A MAXIMUM SIGN WIDTH UP TO 4 FT. (INCLUDING 48 INCH DIAMONDS) SHALL BE 7 FT.

   - DESIGN SHOULDER WIDTH 4 FT.: THE MINIMUM MOUNTING HEIGHT FOR ASSEMBLIES HAVING A MAXIMUM SIGN WIDTH UP TO 3 FT. (INCLUDING 36 IN. DIAMONDS) SHALL BE 7 FT. THE MINIMUM MOUNTING HEIGHT FOR ASSEMBLIES HAVING A MAXIMUM SIGN WIDTH GREATER THAN 3 FT. AND UP TO 4 FT. (INCLUDING 48 IN. DIAMONDS) SHALL BE 10 FT. A MINIMUM MOUNTING HEIGHT OF 7 FT. MAY BE USED FOR SUPPLEMENTAL PLAQUES 3 FT. OR LESS IN WIDTH.

   - DESIGN SHOULDER WIDTH LESS THAN 4 FT.: THE MINIMUM MOUNTING HEIGHT FOR ASSEMBLIES HAVING A MAXIMUM SIGN WIDTH UP TO 3 FT. (36 IN. DIAMONDS NOT INCLUDED) SHALL BE 10 FT.

   THE MAXIMUM MOUNTING HEIGHT SHALL BE 1 FT. GREATER THAN EACH OF THE MINIMUM MOUNTING HEIGHTS SPECIFIED ABOVE. THE MINIMUM AND MAXIMUM MOUNTING HEIGHTS SHALL BE APPLIED TO THE LOWEST SIGN ON THE ASSEMBLY.

7. IN ADDITION TO THE GUIDELINES CONTAINED WITHIN NOTES 1 THROUGH 6, NOTE THE FOLLOWING:

   - IF STEEL BEAM OR TYPE 1-5 PIPE POST TYPE SUPPORTS ARE USED, THE SUPPORT SAW CUTS OR LOWER CROSS MEMBER PIPE SHALL ALWAYS BE A MINIMUM OF 7 FT. ABOVE GROUND LEVEL UNLESS THE REQUIREMENTS FOR REDUCING THE MINIMUM CLEARANCES ALONG CUT SECTIONS TO 3 FT. ARE MET.

   - NO SIGNS SHALL BE MOUNTED BELOW THE SAW CUTS OF STEEL BEAM TYPE SUPPORTS EXCEPT AS ALLOWED HEREIN. IN NO CASE SHALL ANY SIGN BE MOUNTED BELOW THE SUPPORT SAW CUTS IF THE SIGN IS MOUNTED TO MULTIPLE SUPPORTS.

   - AN EXCEPTION SHALL BE MADE TO THE STANDARDS SHOWN HEREIN FOR RAMP AND MAINLINE REFERENCE MARKER SIGNS (D-10 SERIES). D-10 SERIES SIGNS SHALL BE INSTALLED AT A 5 FT. MOUNTING HEIGHT ON FILL SLOPES. ON CUT SLOPES, IF THE ASSEMBLY IS PROTECTED FROM ERRANT VEHICLES PER THE REQUIREMENTS SPECIFIED ELSEWHERE HEREIN, THEY SHALL BE INSTALLED AT A 5 FT. MOUNTING HEIGHT OR HIGHER IF NECESSARY FOR THE BOTTOM OF THE SIGN TO BE A MIN. OF 3 FT. ABOVE GROUND LEVEL. IF INSTALLED ON A CUT SLOPE AND NOT PROTECTED FROM ERRANT VEHICLES, THE SIGN SHALL BE INSTALLED A MIN. OF 5 FT. ABOVE GROUND LEVEL.

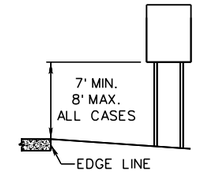

FILL SECTION-NO STANDARD SECONDARY OR SUPPLEMENTAL PLAQUE

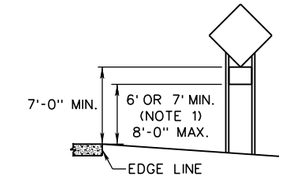

FILL SECTION-SIGN WITH STANDARD SECONDARY PLAQUE

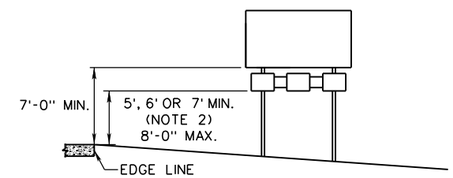

FILL SECTION-SIGN WITH SUPPLEMENTAL PLAQUE

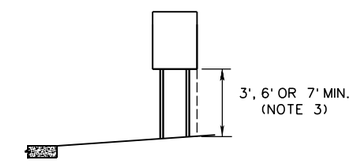

CUT SECTION-NO STANDARD SECONDARY OR SUPPLEMENTAL PLAQUE

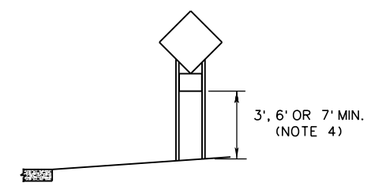

CUT SECTION-SIGN WITH STANDARD SECONDARY PLAQUE

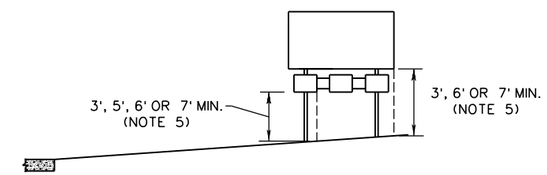

CUT SECTION-SIGN WITH SUPPLEMENTAL PLAQUE

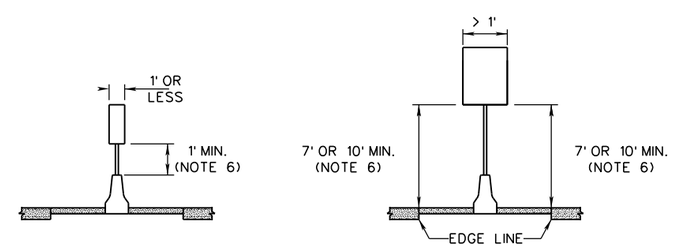

MEDIAN BARRIER INSTALLATION

TYPICAL MOUNTING HEIGHT REQUIREMENTS

WEST VIRGINIA DEPARTMENT OF TRANSPORTATION
DIVISION OF HIGHWAYS
STANDARD DETAIL

PREPARED: 8/2018
REVISION DATE

TYPICAL SIGN PLACEMENT

MOUNTING HEIGHT

STANDARD SHEET TP3-1A

TRAFFIC ENGINEERING DIVISION

12/19/2018

Z:\Projects\WVDOT\Standard Details vol II\New_Sheets\Signing\TP3-1A.dgn

J04C02C03-STDBOR c

1. THE MAXIMUM OFFSET FROM THE ROADWAY MAY BE INCREASED UP TO 30 FT. ONLY FOR LARGE EXTRUDED PANEL SUBSTRATE SIGNS INSTALLED ALONG EXPRESSWAYS AND INTERSTATES.

2. IF CONCRETE BARRIER IS USED, THE OFFSET OF THE NEAR SIGN BEHIND THE BACK FACE OF THE BARRIER IS TO BE 2 FT. IF GUARDRAIL IS USED, ADDITIONAL OFFSET OF THE NEAR SIGN FROM THE BACK OF THE GUARDRAIL POST MAY BE NECESSARY TO ACCOUNT FOR DEFLECTION OF THE RAIL. THE FOLLOWING ARE SUGGESTED OFFSET GUIDELINES. IN NO CASE SHOULD THE OFFSET BE LESS THAN 2 FT.:

   MULTI-LANE ROADWAYS WITH A NORMAL POSTED SPEED LIMIT OF 50 MPH OR GREATER: 4 FT. MIN. OFFSET SHALL TYPICALLY BE USED EXCEPT 3 FT. MIN. OFFSET MAY BE USED WHERE SLOPES ARE GREATER THAN 3:1.

   MULTI-LANE ROADWAYS WITH A NORMAL POSTED SPEED LIMIT OF 45 MPH OR LESS: 3 FT. MIN. OFFSET SHALL TYPICALLY BE USED EXCEPT 2 FT. MIN. OFFSET MAY BE USED WHERE SLOPES ARE GREATER THAN 3:1.

   TWO-LANE ROADWAYS WITH A NORMAL POSTED SPEED LIMIT OF 50 MPH OR GREATER: 3 FT. MIN. OFFSET SHALL TYPICALLY BE USED EXCEPT 2 FT. MIN. OFFSET MAY BE USED WHERE SLOPES ARE GREATER THAN 3:1.

   TWO-LANE ROADWAYS WITH A NORMAL POSTED SPEED LIMIT OF 45 MPH OR LESS: 2 FT. MIN. OFFSET SHALL TYPICALLY BE USED.

3. 2 FT. MIN. OFFSET MAY BE USED ONLY IN BUSINESS, COMMERCIAL, OR RESIDENTIAL AREAS WHERE LATERAL OFFSETS ARE LIMITED. 1 FT. MIN. OFFSET MAY BE USED WHERE CURB EXISTS AND EITHER THE AREA BETWEEN THE ROADWAY AND SIDEWALK IS LIMITED, OR THE EXISTING SUPPORTS ARE CLOSE TO THE CURB.

4. THIS ANGLE SHALL ALSO BE USED FOR SIGNS MOUNTED ON THE LEFT HAND SIDE OF RIGHT HAND CURVES.

5. THIS ANGLE SHALL ALSO BE USED FOR SIGNS MOUNTED ON THE LEFT HAND SIDE OF LEFT HAND CURVES.

6. THE MINIMUM OFFSETS SHOWN HEREIN MAY BE DECREASED AS NEEDED IN ORDER TO ACCOMMODATE RIGHT OF WAY RESTRICTIONS. IN ORDER TO LESSEN THE LIKELIHOOD OF IMPACTS, THE MAXIMUM ALLOWABLE OFFSETS SHOULD BE USED IF FEASIBLE.

   IN ADDITION TO THE REQUIREMENTS SPECIFIED FOR EACH OF THE TYPICAL APPLICATIONS SHOWN, SPECIAL GUIDANCE IS PROVIDED HEREIN FOR ASSEMBLIES PLACED UNDER THE FOLLOWING CONDITIONS, PROVIDED THAT THE ASSEMBLY IS WITHIN THE CLEAR ZONE AND IS NOT PROPERLY SHIELDED BY GUARDRAIL OR CONCRETE BARRIER:

   FORESLOPES ALONG ROADWAYS HAVING A NORMAL POSTED SPEED LIMIT OF 60 MPH OR GREATER

   IF FIELD CONDITIONS PERMIT, IT IS RECOMMENDED THAT THE MINIMUM ASSEMBLY OFFSET BE INCREASED AS NEEDED SO THAT THE NEAR SUPPORT IS OFFSET FROM THE PAVED SURFACE IN ACCORDANCE WITH THE FOLLOWING CHART:

FORESLOPE	MIN. OFFSET
1V:6H	13 FT.
1V:4H	16 FT.
1V:3H	18 FT.

   NEAR DRAINAGE FEATURES

   NO ASSEMBLY SUPPORTS ARE TO BE PLACED WITHIN A DRAINAGE DITCH OR CHANNEL OR SUCH THAT THE ASSEMBLY SPANS OVER THE DITCH OR CHANNEL. ALL ASSEMBLY SUPPORTS SHOULD BE PLACED ON THE ROADSIDE SIDE OF THE DITCH OR CHANNEL IF AT ALL POSSIBLE.

   AN EXCEPTION SHALL BE MADE TO THE STANDARDS SHOWN HEREIN FOR RAMP AND MAINLINE REFERENCE MARKER SIGNS (D-10 SERIES). WHERE NO RIGID BARRIER EXISTS, D-10 SERIES SIGNS SHALL TYPICALLY BE INSTALLED USING A 2 FT. OFFSET. IF GUARDRAIL IS PRESENT AND THE FRONT FACE IS 8 FT. OR LESS FROM THE PAVEMENT, D-10 SERIES SIGNS SHALL BE PLACED USING A 2 FT. OFFSET BEHIND THE GUARDRAIL AS SHOWN HEREIN.

7. OVERHEAD SIGN STRUCTURES ARE TO BE LOCATED BEHIND RIGID BARRIER. IF CONCRETE BARRIER IS USED, THE OFFSET OF THE FACE OF FOUNDATION BEHIND THE BACK FACE OF THE BARRIER IS TO BE 2 FT. IF GUARDRAIL IS USED, ADDITIONAL OFFSET OF THE FACE OF FOUNDATION FROM THE BACK OF THE GUARDRAIL POST MAY BE NECESSARY TO ACCOUNT FOR DEFLECTION OF THE RAIL. SEE ADDITIONAL GUIDELINES UNDER NOTE 2. IF THE FOUNDATION IS AT OR NEAR GROUND LEVEL (WITHIN 4 INCHES), THE OFFSET REQUIREMENT SHALL BE APPLIED TO THE SUPPORT UPRIGHT.

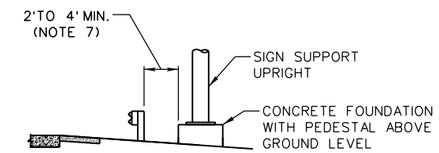

TYPICAL OVERHEAD SIGN STRUCTURE OFFSET REQUIREMENTS

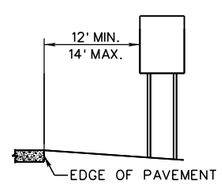

NO SHOULDER OR BARRIER

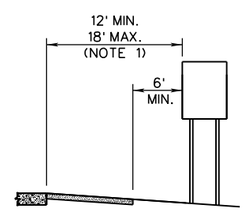

PAVED SHOULDER - NO BARRIER

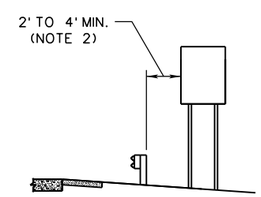

RIGID BARRIER

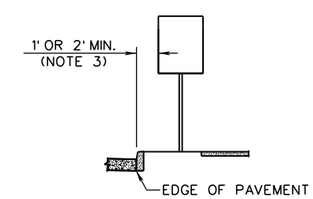

BUSINESS, COMMERCIAL OR RESIDENTIAL AREA

TYPICAL ASSEMBLY OFFSET REQUIREMENTS

(NOTE 6)

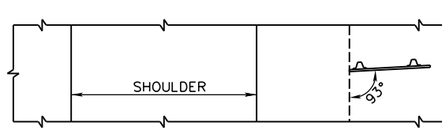

TANGENT SECTION

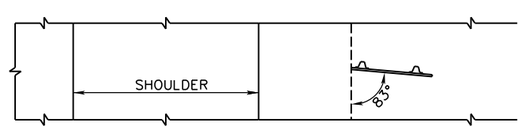

LEFT HAND CURVE
(NOTE 4)

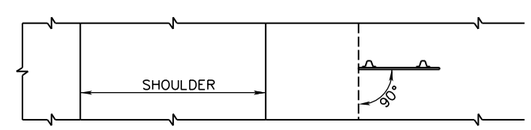

RIGHT HAND CURVE
(NOTE 5)

SIGN ORIENTATION REQUIREMENTS

WEST VIRGINIA DEPARTMENT OF TRANSPORTATION
DIVISION OF HIGHWAYS
STANDARD DETAIL

PREPARED: 8/2018
REVISION DATE

TYPICAL SIGN PLACEMENT OFFSET AND ORIENTATION

STANDARD SHEET TP3-1B

TRAFFIC ENGINEERING DIVISION

12/19/2018

Z:\Projects\WV001\Standard Details vol II\New_Sheets\Signing\TP3-1B.dgn

J04C02C03-STDBOR c

* SEE SHEETS GR4, GR5, AND GR6 OF THE STANDARD DETAILS BOOK VOL. I FOR THE SPECIFIC LENGTH OF NEED POINT FOR THE TYPE OF GUARDRAIL IN QUESTION.

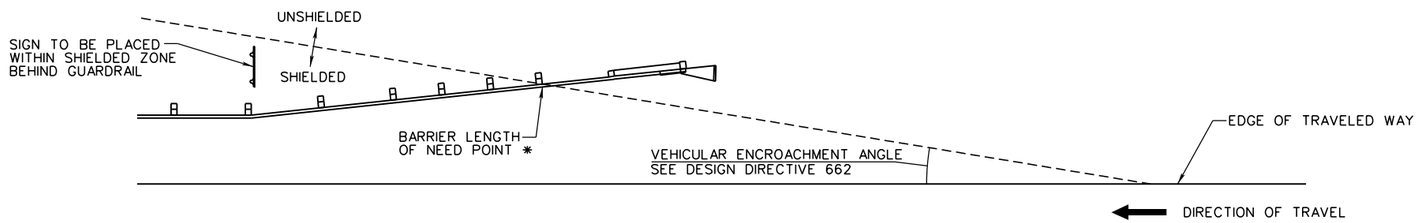

PROPER SHIELDING BEHIND BARRIER

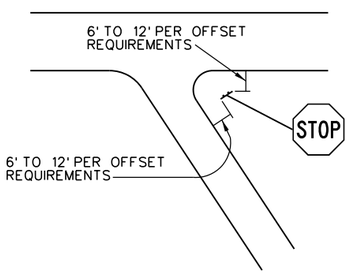

ACUTE ANGLE INTERSECTION

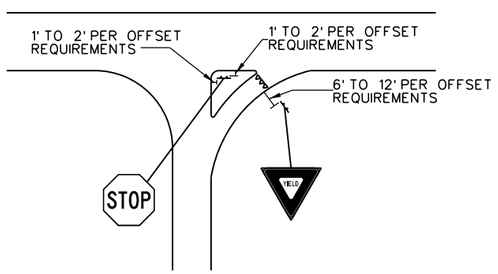

CHANNELIZED INTERSECTION
RAISED OR UNPAVED ISLANDS ONLY

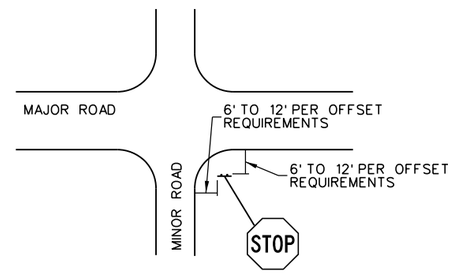

MINOR CROSSROAD

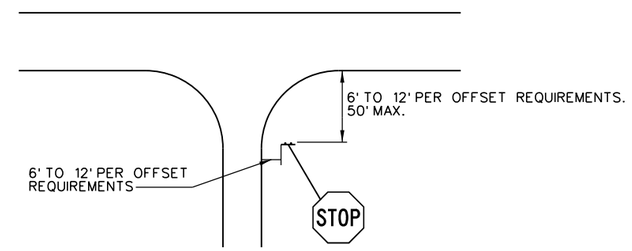

WIDE THROAT INTERSECTION

DETAILED STOP & YIELD SIGN PLACEMENT AT INTERSECTIONS

REFER TO SHEET TP3-1A FOR OFFSET REQUIREMENTS

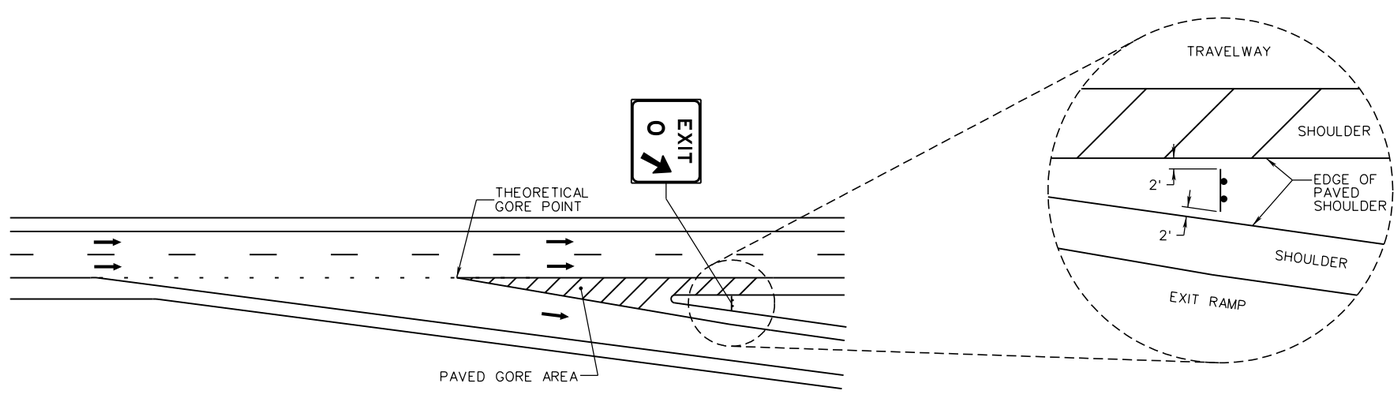

EXIT GORE SIGN PLACEMENT

WEST VIRGINIA DEPARTMENT OF TRANSPORTATION
DIVISION OF HIGHWAYS
STANDARD DETAIL

PREPARED: 8/2018
REVISION DATE

TYPICAL SIGN PLACEMENT

MISC. DETAILS

STANDARD SHEET TP3-1C

TRAFFIC ENGINEERING DIVISION

J04C02C03-STDBOR c

12/19/2018

Z:\Projects\WVDOT\Standard Details vol I\New_Sheets\Signing\TP3-1C.dgn

NOTES:

1. CHEVRON SIGN (W1-8) SPACING SHALL BE MEASURED AT THE EDGE OF PAVEMENT NEAREST TO THE LOCATION OF SIGN.
2. SPACING SHALL BE DETERMINED FROM THE CURVE DATA SHOWN ON THE CURVE DATA SHEET OF THE PLANS. SEE THE "DESIGN GUIDE FOR SIGNING" FOR CHEVRON WARRANT, SPACING AND SIZE GUIDANCE. IF THE SHOULDER WIDTH IS LESS THAN 4 FEET, 18" X 24" CHEVRONS SHALL BE USED.
3. ONCE THE LOCATION OF THE CHEVRON HAS BEEN ESTABLISHED IN THE FIELD, THE LONGITUDINAL LOCATION OF THE VANTAGE POINT FOR EACH CHEVRON SHALL BE DETERMINED BY MEASURING BACK 250 FT FROM EACH CHEVRON. THIS MEASUREMENT SHALL BE TAKEN ALONG THE RIGHT EDGE OF PAVEMENT FOR RIGHT HAND CURVES AND ALONG THE LEFT EDGE OF PAVEMENT FOR LEFT HAND CURVES. FOR TWO-WAY ROADWAYS, THE LEFT EDGE OF PAVEMENT SHALL BE CONSIDERED TO BE THE ROADWAY CENTERLINE. THE LATERAL LOCATION OF EACH VANTAGE POINT SHALL BE THE CENTER OF THE TRAVELED WAY IN THE DIRECTION OF TRAVEL VIEWING THE CHEVRON.
4. CHEVRON SIGNS SHALL BE ORIENTED SO THAT THE FACE OF THE CHEVRON IS APPROXIMATELY PERPENDICULAR TO THE SIGHT LINE.
5. IF THE SIGHT LINE IS OBSTRUCTED THEN THE CHEVRON SHALL BE ORIENTED SO THAT THE FACE OF THE CHEVRON IS APPROXIMATELY PERPENDICULAR TO THE SIGHT LINE CREATED FROM WHERE THE CHEVRON IS FIRST VISIBLE FROM THE TRAVELED WAY.
6. ALL U-CHANNEL SHALL BE 3 LB/FT.

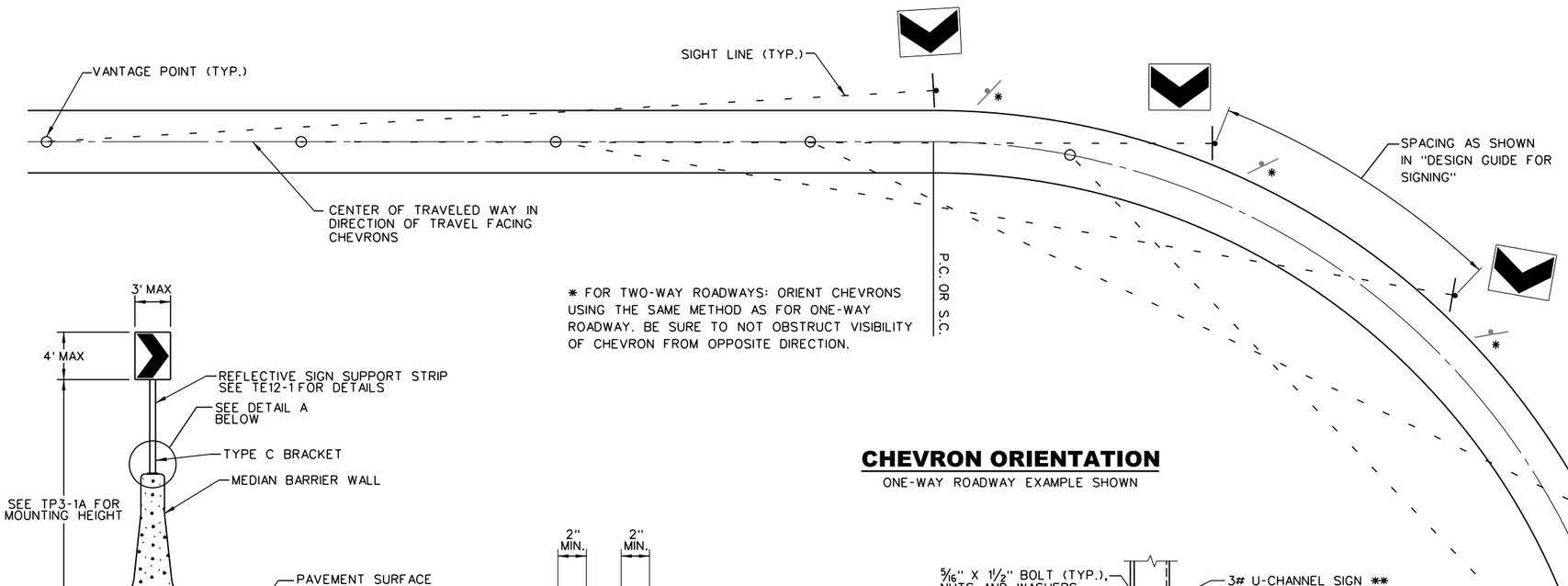

CHEVRON ORIENTATION

ONE-WAY ROADWAY EXAMPLE SHOWN

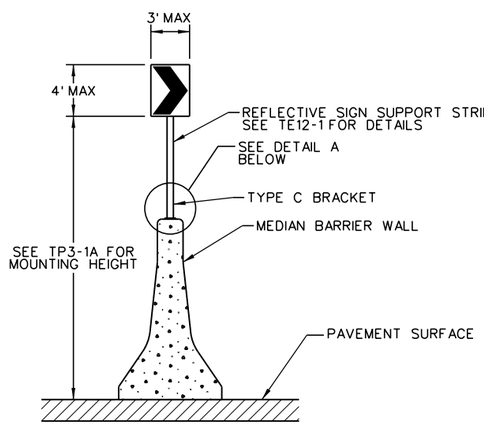

SECTION VIEW

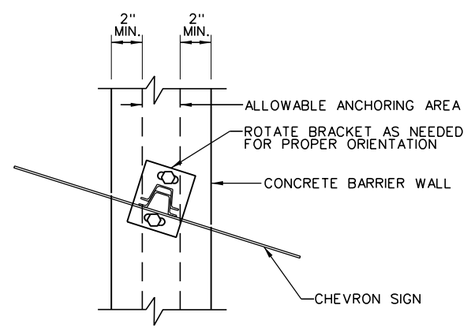

TOP VIEW

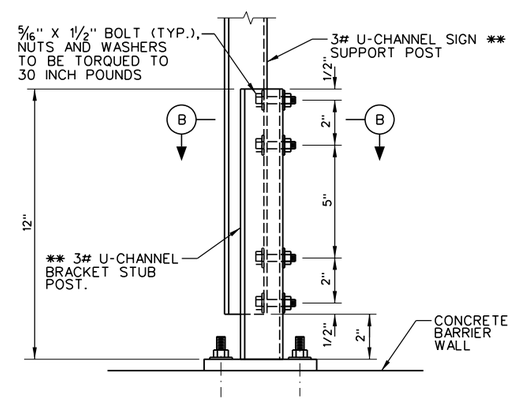

SIDE VIEW

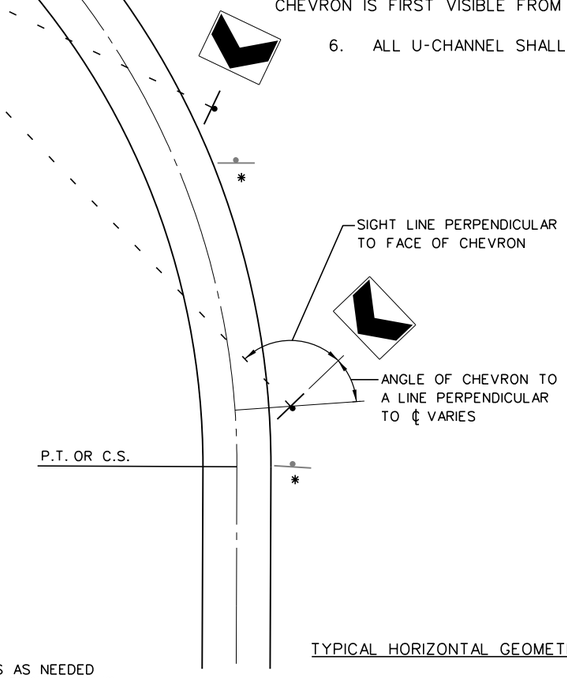

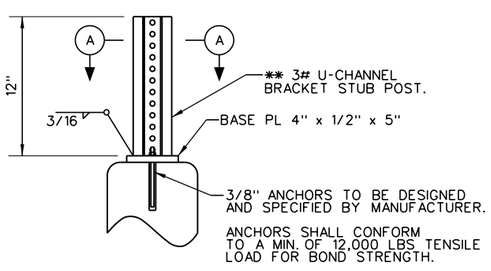

DETAIL A

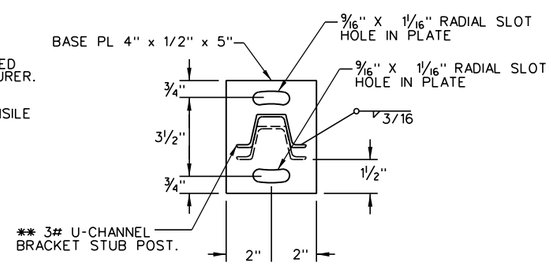

SECTION A-A

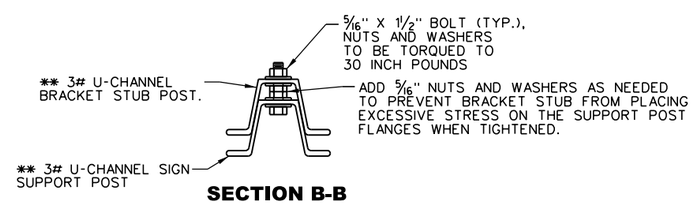

SECTION B-B

** TO ENSURE PROPER NESTING OF BRACKET STUB POST AND SIGN SUPPORT POST, BOTH SHALL BE 3# U-CHANNEL AND SHALL BE OF THE SAME MAKE.

TYPE C BARRIER WALL MOUNT BRACKET

FOR USE WITH CHEVRONS ONLY

TYPICAL HORIZONTAL GEOMETRY TERMS

P.C. = POINT OF CURVATURE, START OF HORIZONTAL CURVE
P.T. = POINT OF TANGENCY, END OF HORIZONTAL CURVE
S.C. = SPIRAL TO CURVE, END OF SPIRAL IN & START OF CURVE
C.S. = CURVE TO SPIRAL, END OF CURVE & START OF SPIRAL OUT

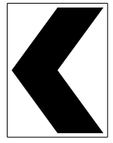

W1-8L

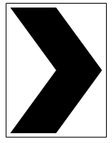

W1-8R

WEST VIRGINIA DEPARTMENT OF TRANSPORTATION
DIVISION OF HIGHWAYS
STANDARD DETAIL

PREPARED: 8/2018
REVISION DATE

CHEVRON ALIGNMENT SIGNS (W1-8) & TYPE C BRACKET

STANDARD SHEET TP3-2

TRAFFIC ENGINEERING DIVISION

12/19/2018

Z:\Projects\WVDOT\Standard Details vol II\New_Sheets\Signing\TP3-2.dgn

J04C02C03-STDBDR c

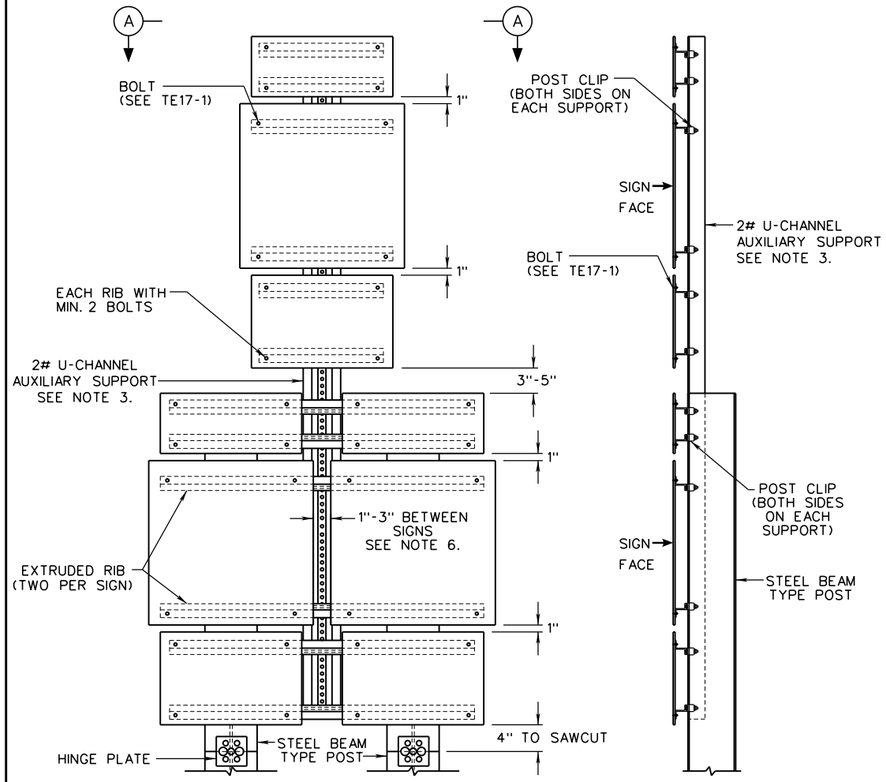

FRONT VIEW **SIDE VIEW**

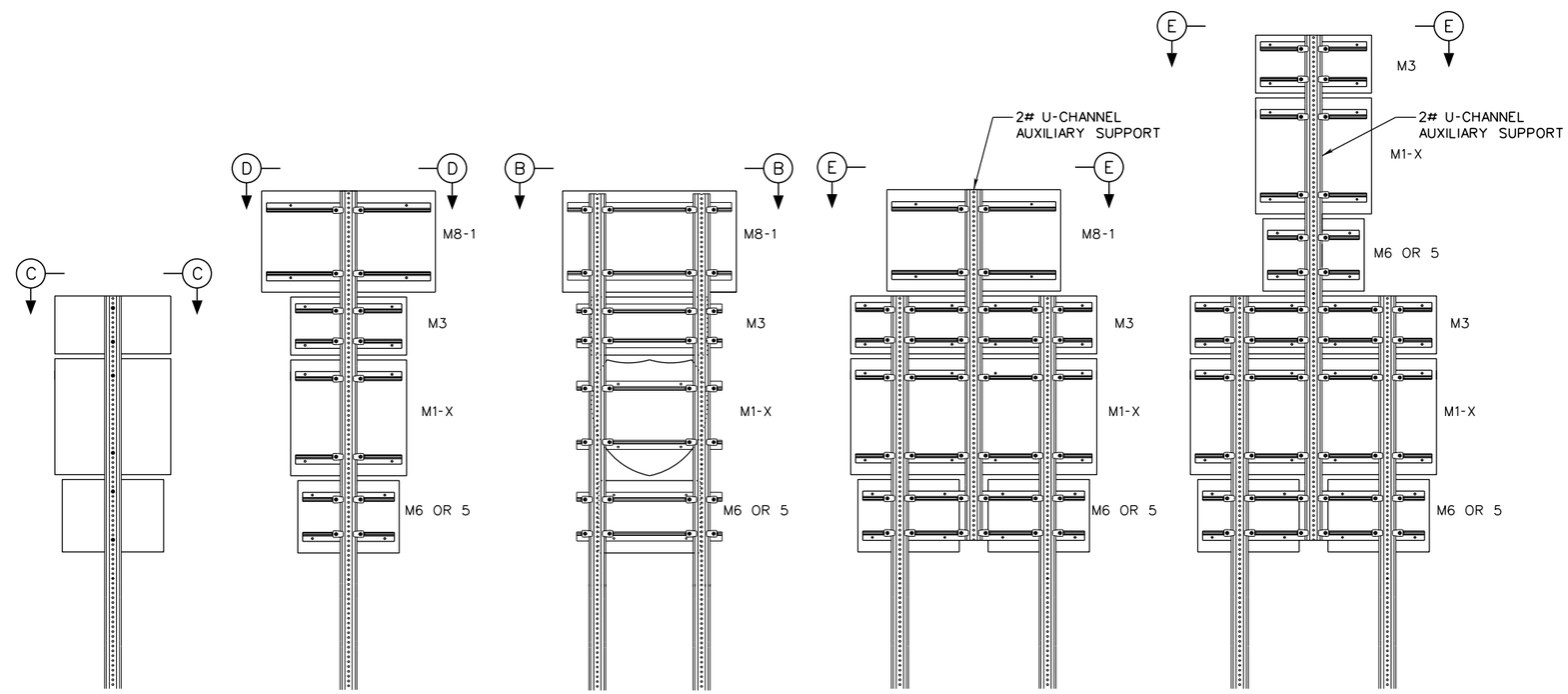

BACK VIEW

SMALL ROUTE MARKER ON U-CHANNELS

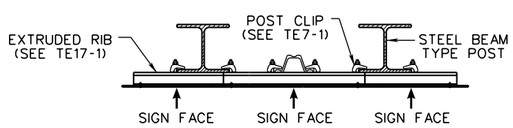

SECTION A-A

MOUNTING OF ROUTE MARKER ASSEMBLIES TO STEEL BEAM TYPE POSTS

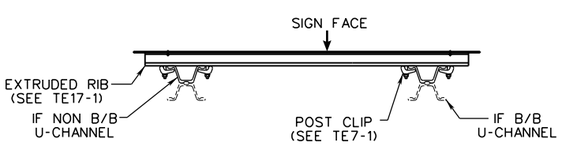

SECTION B-B

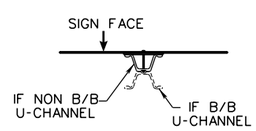

SECTION C-C

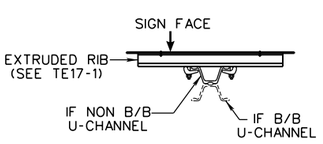

SECTION D-D

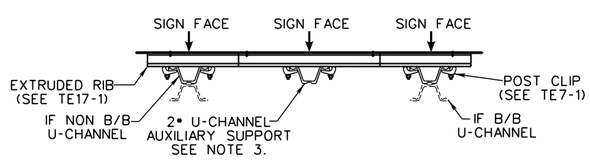

SECTION E-E

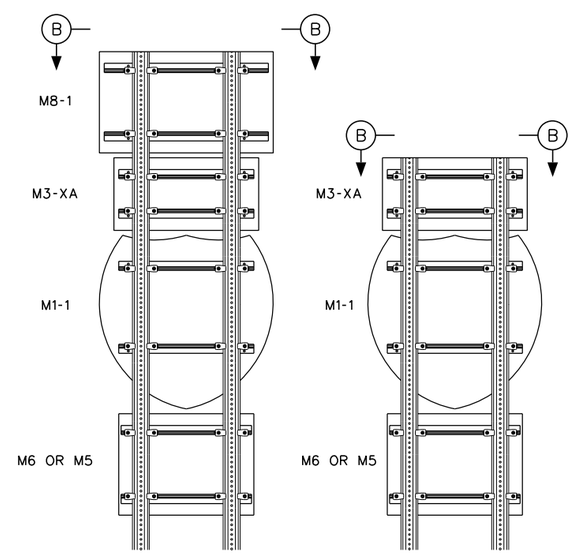

BACK VIEW

LARGE ROUTE MARKER ON 2 SUPPORTS

NOTES:

1. SEE SHEET TE17-1 FOR ASSEMBLY AND HARDWARE DETAILS.
2. THE TYPE OF MAIN SUPPORT POSTS WILL VARY DEPENDING UPON SQUARE AREA OF SIGN AND LENGTH OF SUPPORT NEEDED FOR THE SITUATION. SEE SHEET TP3-1A TO DETERMINE THE REQUIRED SUPPORT LENGTH. USE THE CHARTS ON SHEETS TE1-3B (STEEL BEAM TYPE) AND TE1-7A (U-CHANNEL TYPE) TO DETERMINE THE TYPE AND SIZE SUPPORT REQUIRED.
3. USE POST CLIPS TO ATTACH AUXILIARY SUPPORT TO EACH EXTRUDED RIB THAT IS ATTACHED TO THE STEEL BEAM SUPPORTS. USE 2 POST CLIPS PER PIECE OF RIBBING.
4. ON SIGN ASSEMBLIES ON ONE SUPPORT, THE SIGN SHALL BE MOUNTED TO THE FLANGE OF THE U-CHANNEL.
5. THE TOP OF THE MAIN POST SUPPORT OR AUXILIARY SUPPORT SHALL NOT EXTEND BEYOND THE TOP OF THE SIGN, BUT SHALL BE 2 IN. OR LESS FROM THE EDGE OF THE SIGN.
6. WHEN ROUTE MARKERS OF VARYING WIDTHS ARE USED, THE SPACING SHALL BE BETWEEN THE TWO WIDEST ROUTE MARKERS.

WEST VIRGINIA DEPARTMENT OF TRANSPORTATION
DIVISION OF HIGHWAYS
STANDARD DETAIL

PREPARED: 8/2018
REVISION DATE

TYPICAL ROUTE MARKER MOUNTING DETAILS

STANDARD SHEET TP4-1A

J04C02C03-STDBDR c
TRAFFIC ENGINEERING DIVISION
12/19/2018
Z:\Projects\WVDOT\Standard Details vol II\New_Sheets\Signing\TP4-1A.dgn

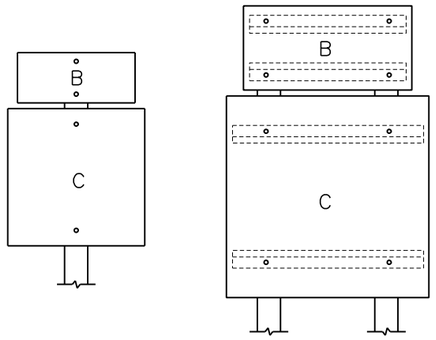

SMALL
DIRECT MOUNT TO U-CHANNEL

LARGE
MOUNT TO EXTRUDED RIBS

GS-1A

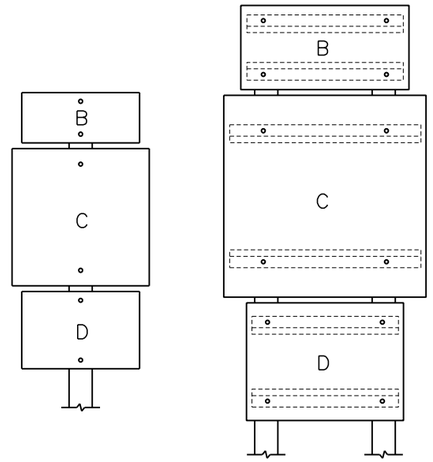

SMALL
DIRECT MOUNT TO U-CHANNEL

LARGE
MOUNT TO EXTRUDED RIBS

GS-1B

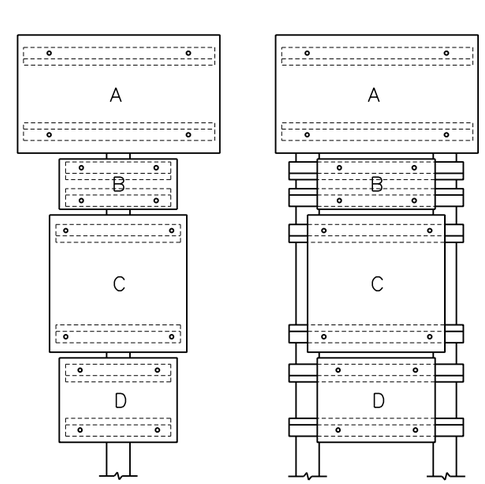

SMALL - ONE SUPPORT
MOUNT TO EXTRUDED RIBS

SMALL - TWO SUPPORTS
MOUNT TO EXTRUDED RIBS

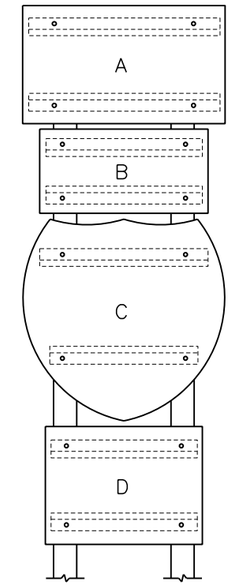

LARGE
MOUNT TO EXTRUDED RIBS

GS-1C

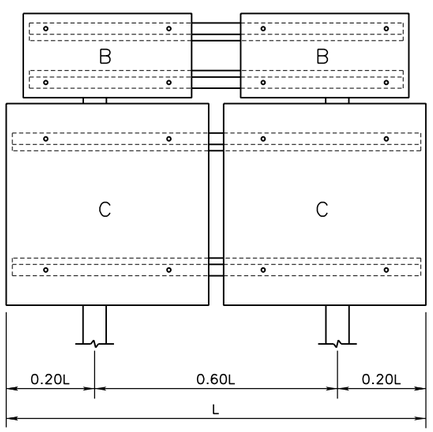

LARGE OR SMALL
MOUNT TO EXTRUDED RIBS

GS-2A

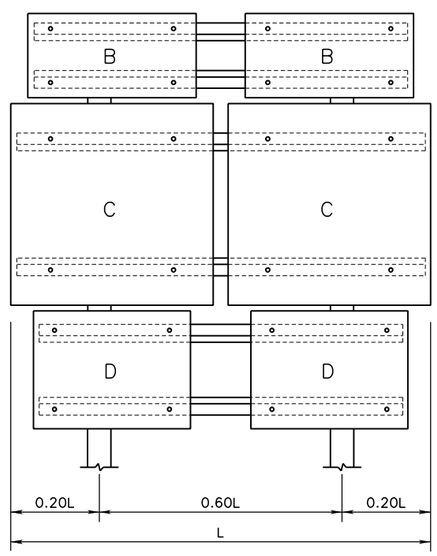

LARGE OR SMALL
MOUNT TO EXTRUDED RIBS

GS-2B

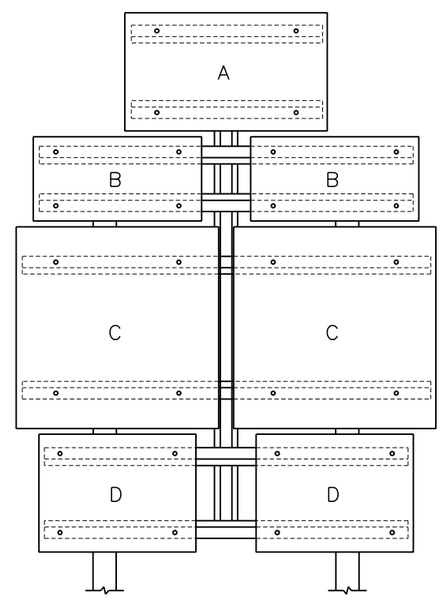

LARGE OR SMALL
MOUNT TO EXTRUDED RIBS

GS-2C

NOTES:

1. TYPICAL ARRANGEMENTS SHOWN FOR ASSEMBLIES WITH ONE OR TWO SETS OF ROUTE MARKERS. A "SET" CONSISTS OF:

   - "FREEWAY ENTRANCE" PLAQUE (WHEN APPLICABLE);
   - CARDINAL DIRECTION, "TO", "JCT", OR "END" PLAQUE;
   - ROUTE SHIELD;
   - DIRECTIONAL ARROW OR LANE CONTROL PLAQUE (WHEN APPLICABLE).

2. A SINGLE "FREEWAY ENTRANCE" SIGN MAY BE CENTERED OVER ONE OR TWO SETS OF ROUTE MARKERS.

3. SEE SHEET TE17-1 AND TP4-1A FOR ASSEMBLY, SPACING AND HARDWARE DETAILS.

MARKER	DESCRIPTION	SMALL	LARGE
A	FREEWAY ENTRANCE	36" x 21"	36" x 21"
B	CARDINAL TO, JCT END	24" x 12" 24" x 12" 21" x 15"	30" x 15" 30" x 15" 28" x 21"
C	US, STATE OR INTERSTATE ROUTE MARKER	24" x 24" OR 30" x 24"	36" x 36" OR 45" x 36"
D	DIRECTIONAL ARROW	21" x 15"	28" x 21"

AN ADDITIONAL "TOLL" PLAQUE (NOT SHOWN IN EXAMPLES) MAY BE USED AS PART OF THE ASSEMBLY WHEN APPLICABLE. SMALL SIZE IS 24" X 12". LARGE SIZE IS 30" X 15".

WEST VIRGINIA DEPARTMENT OF TRANSPORTATION
DIVISION OF HIGHWAYS
STANDARD DETAIL

PREPARED: 8/2018
REVISION DATE

TYPICAL ROUTE MARKER ARRANGEMENTS 1 AND 2 SETS

STANDARD SHEET TP4-1B

TRAFFIC ENGINEERING DIVISION

Z:\Projects\WVDOT\Standard Details vol II\New_Sheets\Signing\TP4-1B.dgn
12/19/2018
J04C02C03-STDBDR c

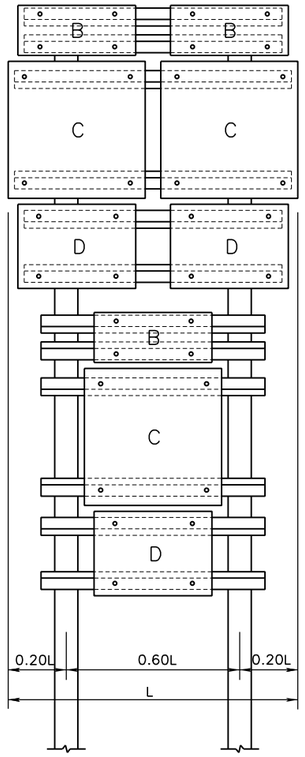

LARGE OR SMALL
MOUNT TO EXTRUDED RIBS

GS-3A

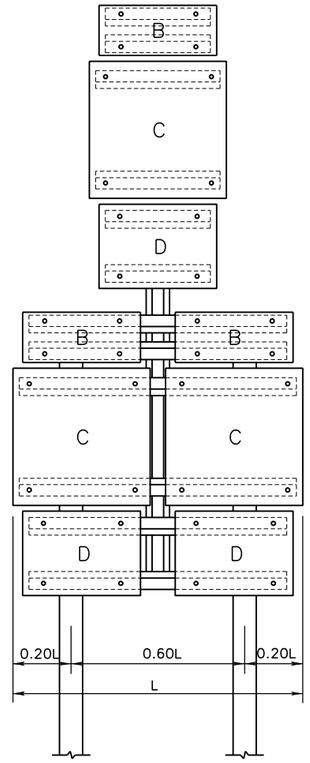

LARGE OR SMALL
MOUNT TO EXTRUDED RIBS

GS-3B

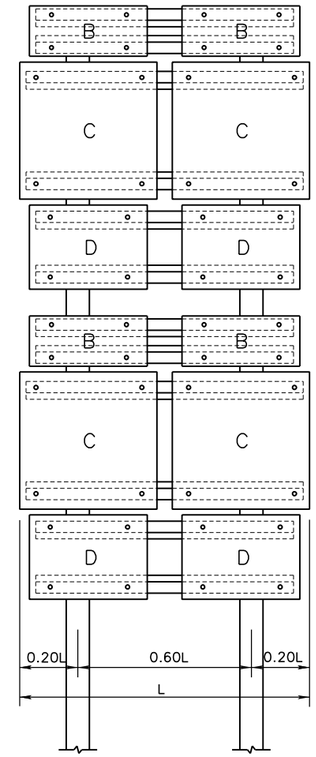

LARGE OR SMALL
MOUNT TO EXTRUDED RIBS

GS-4A

NOTES:

1. TYPICAL ARRANGEMENTS SHOWN FOR ASSEMBLIES WITH THREE OR FOUR SETS OF ROUTE MARKERS. A "SET" CONSISTS OF:

   - "FREEWAY ENTRANCE" PLAQUE (WHEN APPLICABLE);
   - CARDINAL DIRECTION, "TO", "JCT", OR "END" PLAQUE;
   - ROUTE SHIELD;
   - DIRECTIONAL ARROW OR LANE CONTROL PLAQUE (WHEN APPLICABLE).

2. SEE SHEET TE17-1 AND TP4-1A FOR ASSEMBLY, SPACING AND HARDWARE DETAILS.

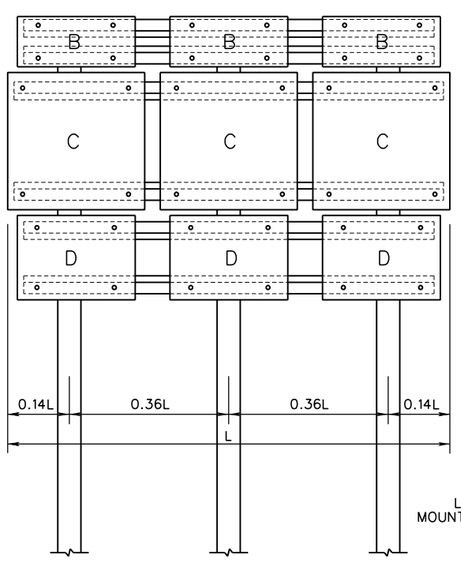

LARGE OR SMALL
MOUNT TO EXTRUDED RIBS

GS-3C

MARKER	DESCRIPTION	SMALL	LARGE
A	FREEWAY ENTRANCE	36" x 21"	36" x 21"
B	CARDINAL TO JCT	24" x 12" 24" x 12" 21" x 15"	30" x 15" 30" x 15" 28" x 21"
C	US, STATE OR INTERSTATE ROUTE MARKER	24" x 24" OR 30" x 24"	36" x 36" OR 45" x 36"
D	DIRECTIONAL ARROW	21" x 15"	28" x 21"

WEST VIRGINIA DEPARTMENT OF TRANSPORTATION
DIVISION OF HIGHWAYS
STANDARD DETAIL

PREPARED: 8/2018
REVISION DATE

TYPICAL ROUTE MARKER ARRANGEMENTS 3 AND 4 SETS

STANDARD SHEET TP4-1C

TRAFFIC ENGINEERING DIVISION

12/19/2018

Z:\Projects\WVDOT\Standard Details vol II\New_Sheets\Signing\TP4-1C.dgn

J04C02C03-STDBOR c

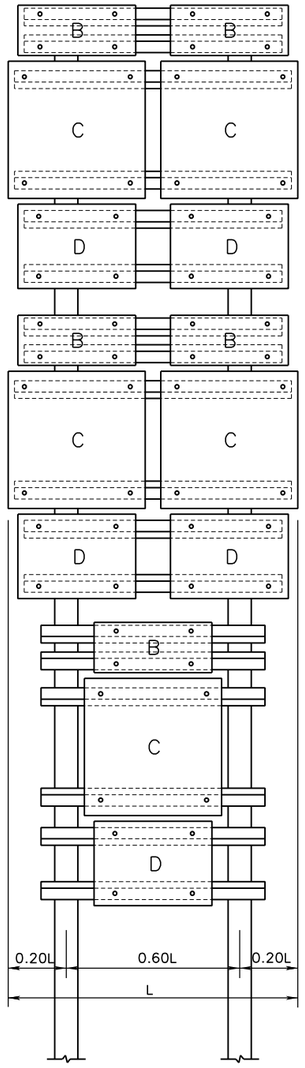

LARGE OR SMALL
MOUNT TO EXTRUDED RIBS

GS-5A

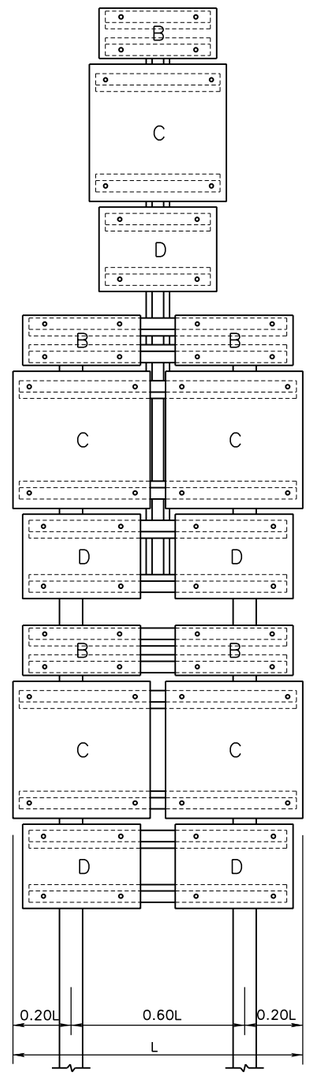

LARGE OR SMALL
MOUNT TO EXTRUDED RIBS

GS-5B

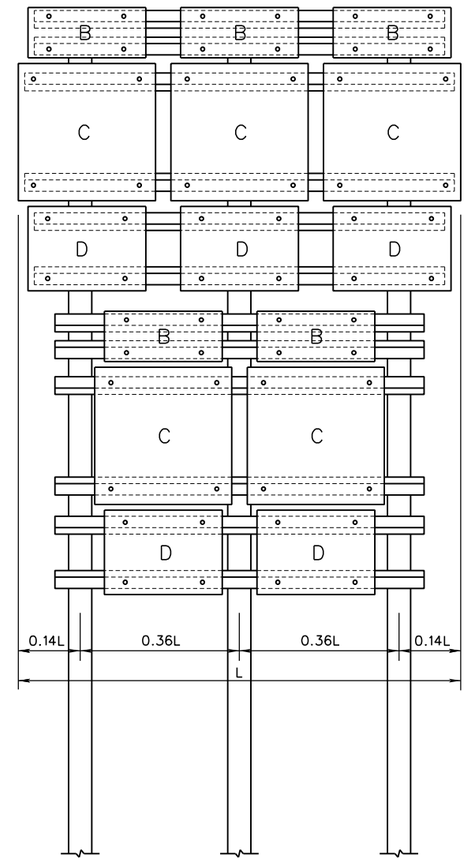

LARGE OR SMALL
MOUNT TO EXTRUDED RIBS

GS-5C

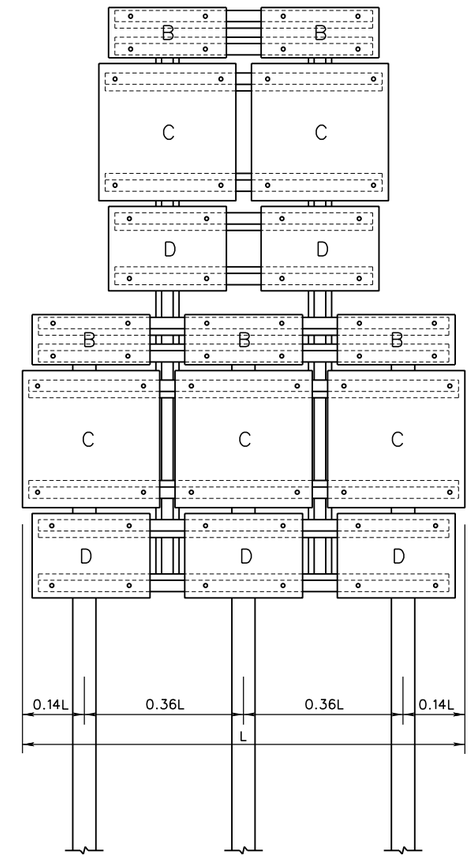

LARGE OR SMALL
MOUNT TO EXTRUDED RIBS

GS-5D

MARKER	DESCRIPTION	SMALL	LARGE
A	FREEWAY ENTRANCE	36" x 21"	36" x 21"
B	CARDINAL TO JCT	24" x 12" 24" x 12" 21" x 15"	30" x 15" 30" x 15" 28" x 21"
C	US, STATE OR INTERSTATE ROUTE MARKER	24" x 24" OR 30" x 24"	36" x 36" OR 45" x 36"
D	DIRECTIONAL ARROW	21" x 15"	28" x 21"

NOTES:

1. TYPICAL ARRANGEMENTS SHOWN FOR ASSEMBLIES WITH FIVE SETS OF ROUTE MARKERS. A "SET" CONSISTS OF:

   - "FREEWAY ENTRANCE" PLAQUE (WHEN APPLICABLE);
   - CARDINAL DIRECTION, "TO", "JCT", OR "END" PLAQUE;
   - ROUTE SHIELD;
   - DIRECTIONAL ARROW OR LANE CONTROL PLAQUE (WHEN APPLICABLE).

2. SEE SHEET TE17-1 AND TP4-1A FOR ASSEMBLY, SPACING AND HARDWARE DETAILS.

WEST VIRGINIA DEPARTMENT OF TRANSPORTATION
DIVISION OF HIGHWAYS
STANDARD DETAIL

PREPARED: 8/2018
REVISION DATE

TYPICAL ROUTE MARKER ARRANGEMENTS 5 SETS

STANDARD SHEET TP4-1D

TRAFFIC ENGINEERING DIVISION

J04C02C03-STDBOR c
Z:\Projects\WVDOT\Standard Details vol II\New_Sheets\Signing\TP4-1D.dgn
12/19/2018

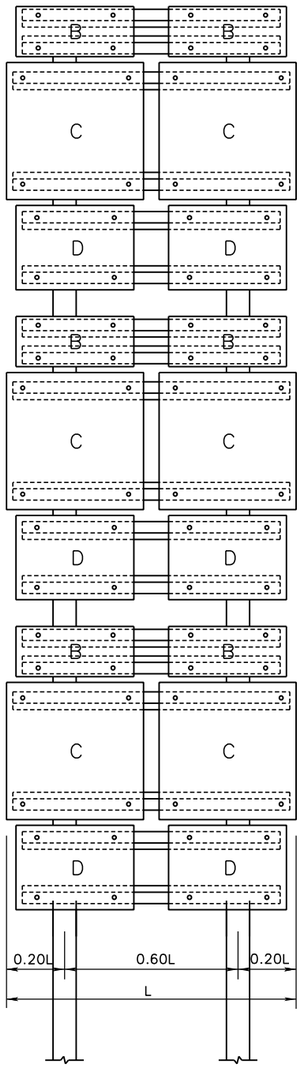

LARGE OR SMALL
MOUNT TO EXTRUDED RIBS

GS-6A

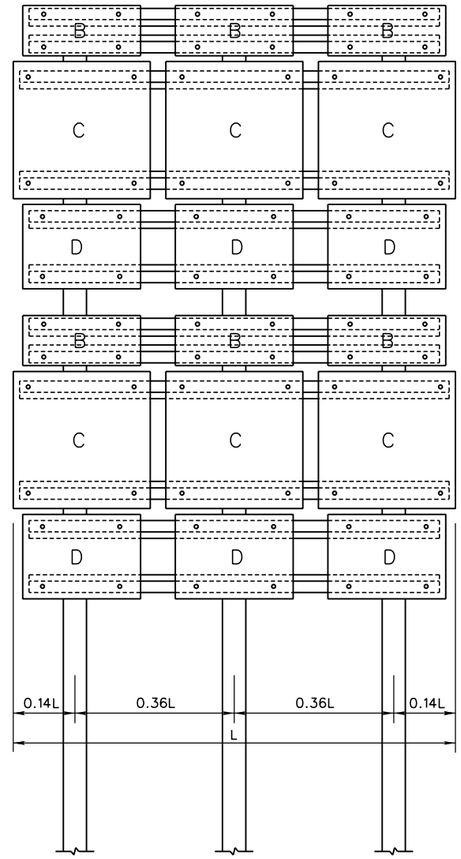

LARGE OR SMALL
MOUNT TO EXTRUDED RIBS

GS-6B

NOTES:

1. TYPICAL ARRANGEMENTS SHOWN FOR ASSEMBLIES WITH SIX SETS OF ROUTE MARKERS. A "SET" CONSISTS OF:

   - "FREEWAY ENTRANCE" PLAQUE (WHEN APPLICABLE);
   - CARDINAL DIRECTION, "TO", "JCT", OR "END" PLAQUE;
   - ROUTE SHIELD;
   - DIRECTIONAL ARROW OR LANE CONTROL PLAQUE (WHEN APPLICABLE).

2. SEE SHEET TE17-1 AND TP4-1A FOR ASSEMBLY, SPACING AND HARDWARE DETAILS.

MARKER	DESCRIPTION	SMALL	LARGE
A	FREEWAY ENTRANCE	36" x 21"	36" x 21"
B	CARDINAL TO JCT	24" x 12" 24" x 12" 21" x 15"	30" x 15" 30" x 15" 28" x 21"
C	US, STATE OR INTERSTATE ROUTE MARKER	24" x 24" OR 30" x 24"	36" x 36" OR 45" x 36"
D	DIRECTIONAL ARROW	21" x 15"	28" x 21"

WEST VIRGINIA DEPARTMENT OF TRANSPORTATION
DIVISION OF HIGHWAYS
STANDARD DETAIL

PREPARED: 8/2018
REVISION DATE

TYPICAL ROUTE MARKER ARRANGEMENTS 6 SETS

STANDARD SHEET TP4-1E

TRAFFIC ENGINEERING DIVISION

J04C02C03-STDBDR c
Z:\Projects\WVDOT\Standard Details vol II\New_Sheets\Signing\TP4-1E.dgn
12/19/2018

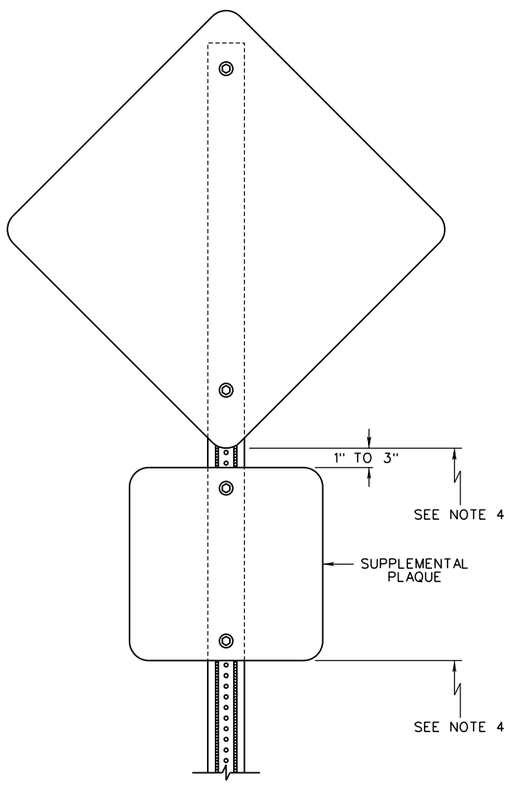

SINGLE-POST MOUNTING FOR WARNING SIGN ASSEMBLIES

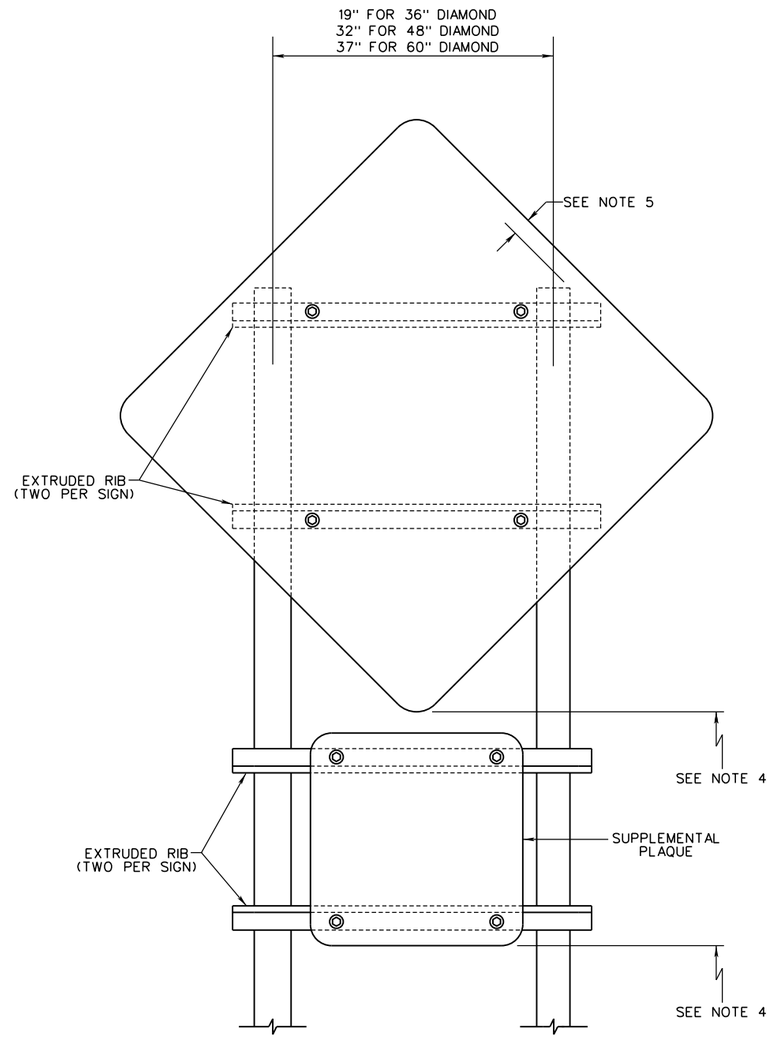

TWO-POST MOUNTING FOR WARNING SIGN ASSEMBLIES

NOTES:

1. ALL WARNING SIGN ASSEMBLIES SHOWN ON THIS SHEET ARE FOR ASSEMBLIES CONSISTING OF ONLY TWO (2) SIGNS.
2. WARNING SIGN ASSEMBLY ARRANGEMENTS SHOWN ON THIS SHEET ARE TYPICAL. THE ARRANGEMENTS SHOWN SHOULD BE USED FOR ALL WARNING SIGN ASSEMBLIES CONSISTING OF TWO (2) SIGNS, EXCEPT WHERE CONDITIONS DO NOT WARRANT. ANY DEVIATIONS TO THE SHOWN ARRANGEMENTS SHALL BE APPROVED BY THE PROJECT ENGINEER PRIOR TO INSTALLATION.
3. SEE SHEET TE17-1 FOR ASSEMBLY AND HARDWARE DETAILS.
4. SEE SHEET TP3-1A FOR MOUNTING HEIGHT REQUIREMENTS.
5. THE TOP OF THE POST SUPPORTS SHALL BE NO CLOSER THAN 1 IN. TO THE EDGE OF THE DIAMOND SIGN.
6. THE TYPE OF SUPPORT POSTS WILL VARY DEPENDING UPON SQUARE AREA OF SIGN AND LENGTH OF SUPPORT NEEDED FOR THE SITUATION. USE THE CHARTS ON SHEETS TE1-3B (STEEL BEAM TYPE) AND TE1-7A (U-CHANNEL TYPE) TO DETERMINE THE TYPE AND SIZE SUPPORT REQUIRED.
7. SUPPLEMENTAL PLAQUES ARE NOT TO BE MOUNTED TO ONE SUPPORT IN A TWO SUPPORT ARRANGEMENT.
8. FOR TWO SUPPORT ASSEMBLIES, TWO POST CLIPS SHALL BE USED AT EACH SUPPORT TO EXTRUDED RIB CONNECTION.

WEST VIRGINIA DEPARTMENT OF TRANSPORTATION
DIVISION OF HIGHWAYS
STANDARD DETAIL

PREPARED: 8/2018
REVISION DATE

TYPICAL WARNING SIGN ASSEMBLY ARRANGEMENTS

STANDARD SHEET TP4-2

TRAFFIC ENGINEERING DIVISION

12/19/2018

Z:\Projects\WVDOT\Standard Details vol II\New_Sheets\Signing\TP4-2.dgn

J04C02C03-STDBOR c

GENERAL NOTES

1. XR-3 AND XR-9 ASSEMBLY ARRANGEMENTS SHOWN ON THIS SHEET ARE TYPICAL. THE ARRANGEMENTS SHOWN SHOULD BE USED FOR ALL SIGN ASSEMBLIES CONSISTING OF AN R4-7 OR R4-8 WITH AN XR-3 OR XR-9 BELOW. ANY DEVIATIONS TO THE SHOWN ARRANGEMENTS SHALL BE APPROVED BY THE PROJECT ENGINEER PRIOR TO INSTALLATION.
2. SEE SHEET TE17-1 FOR ASSEMBLY AND HARDWARE DETAILS.
3. SEE SHEET TP3-1A FOR MOUNTING HEIGHT REQUIREMENTS.
4. THE TYPE OF SUPPORT POSTS WILL VARY DEPENDING UPON SQUARE AREA OF SIGN AND LENGTH OF SUPPORT NEEDED FOR THE SITUATION. USE THE CHARTS ON SHEETS TE1-3B (STEEL BEAM TYPE) AND TE1-7A (U-CHANNEL TYPE) TO DETERMINE THE TYPE AND SIZE SUPPORT REQUIRED.
5. XR-9 SIGNS ARE NOT TO BE MOUNTED TO ONE SUPPORT IN A TWO SUPPORT ARRANGEMENT.
6. FOR TWO SUPPORT ASSEMBLIES, TWO POST CLIPS SHALL BE USED AT EACH SUPPORT TO EXTRUDED RIB CONNECTION.

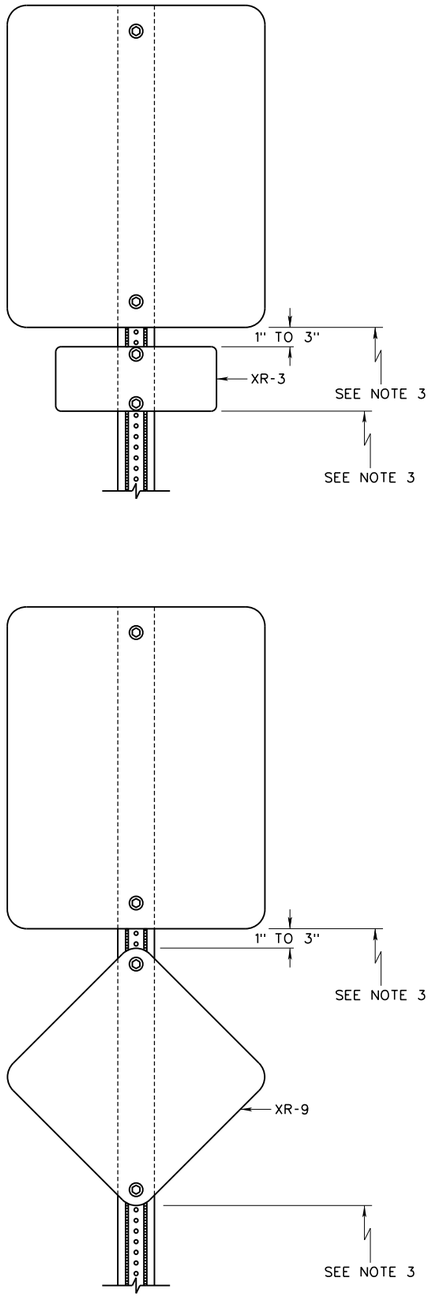

SINGLE-POST MOUNTING FOR ASSEMBLIES W/ XR-3 & XR-9

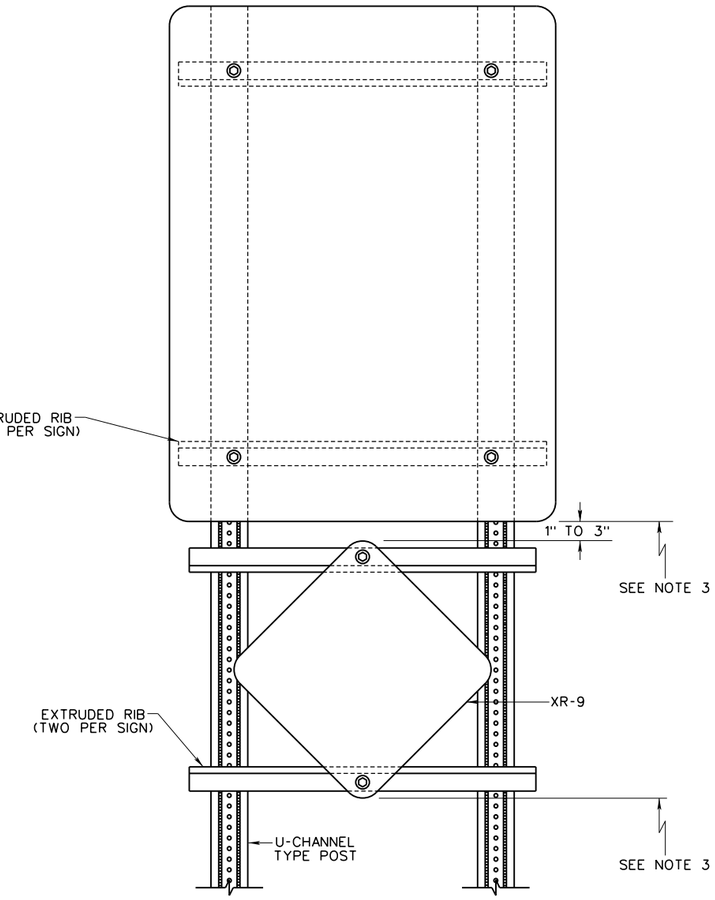

TWO-POST MOUNTING FOR ASSEMBLIES W/ XR-9

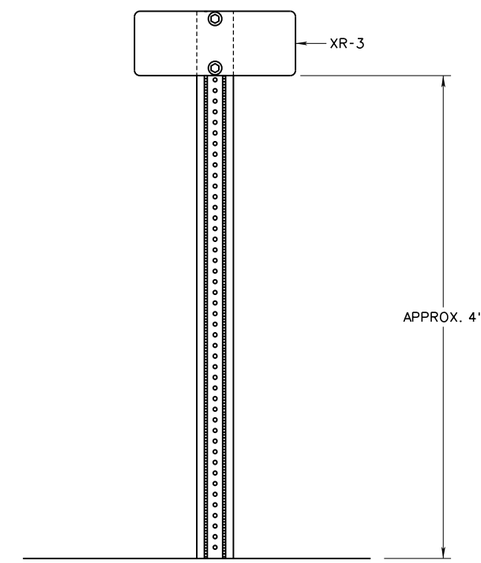

SINGLE AND BACK-TO-BACK XR-3 INSTALLATION

WEST VIRGINIA DEPARTMENT OF TRANSPORTATION
DIVISION OF HIGHWAYS
STANDARD DETAIL

PREPARED: 8/2018
REVISION DATE

TYPICAL XR-3 & XR-9 ARRANGEMENTS

STANDARD SHEET TP4-3

TRAFFIC ENGINEERING DIVISION

J04C02C03-STDBOR c

Z:\Projects\WVDOT\Standard Details vol I\New_Sheets\Signing\TP4-3.dgn
12/19/2018

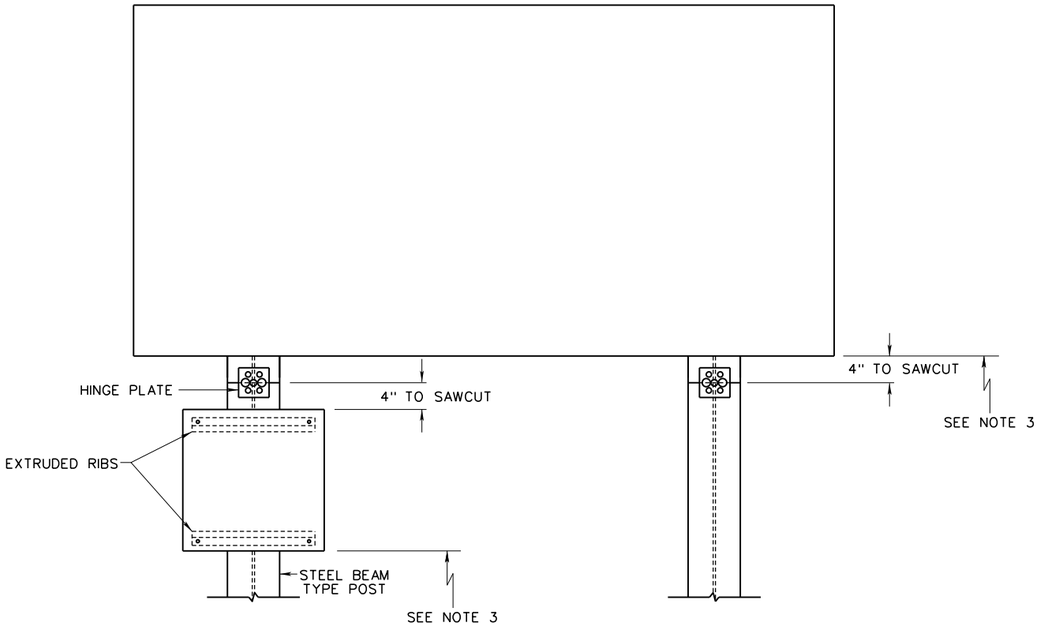

STEEL BEAM

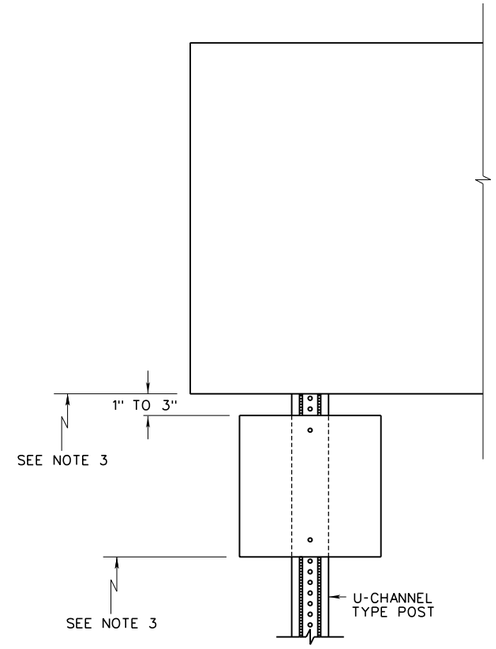

U-CHANNEL

PLAQUE MOUNTED TO SINGLE SUPPORT

GENERAL NOTES

1. SUPPLEMENTAL PLAQUE ARRANGEMENTS SHOWN ON THIS SHEET ARE TYPICAL. THE ARRANGEMENTS SHOWN SHOULD BE USED FOR ALL SIGN ASSEMBLIES CONSISTING OF A GUIDE SIGN WITH SUPPLEMENTAL PLAQUE(S) BELOW. ANY DEVIATIONS TO THE SHOWN ARRANGEMENTS SHALL BE APPROVED BY THE PROJECT ENGINEER PRIOR TO INSTALLATION.
2. SEE SHEET TE17-1 FOR ASSEMBLY AND HARDWARE DETAILS.
3. SEE SHEET TP3-1A FOR MOUNTING HEIGHT REQUIREMENTS.
4. SEE SHEET TE1-3A FOR SAW CUT AND HINGE PLATE DETAILS.
5. THE TYPE OF SUPPORT POSTS WILL VARY DEPENDING UPON SQUARE AREA OF SIGN AND LENGTH OF SUPPORT NEEDED FOR THE SITUATION. USE THE CHARTS ON SHEETS TE1-3B (STEEL BEAM TYPE) AND TE1-7A (U-CHANNEL TYPE) TO DETERMINE THE TYPE AND SIZE SUPPORT REQUIRED.
6. TWO POST CLIPS SHALL BE USED AT EACH SUPPORT TO EXTRUDED RIB CONNECTION.

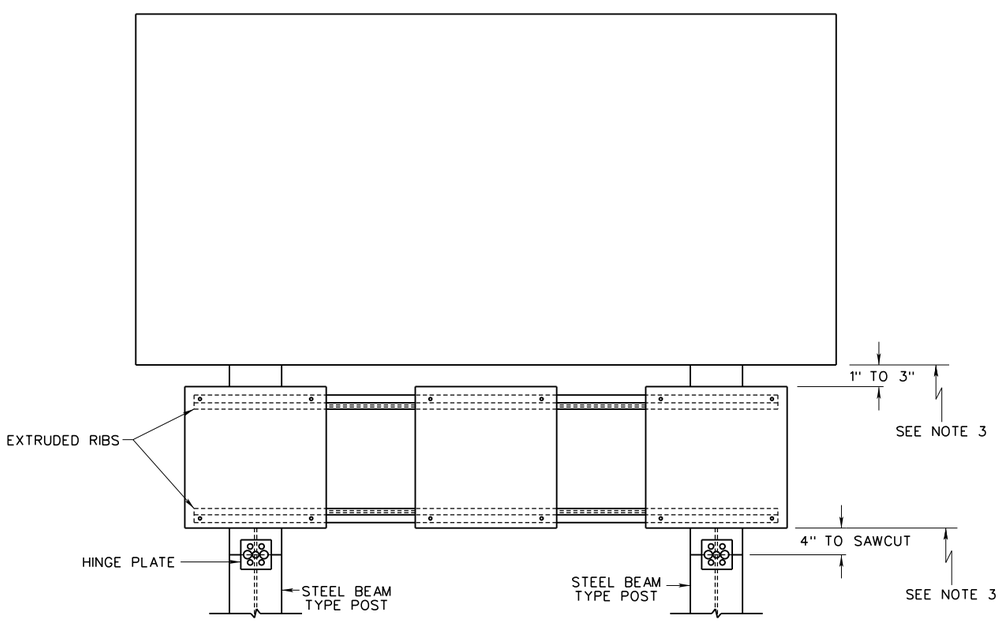

STEEL BEAM

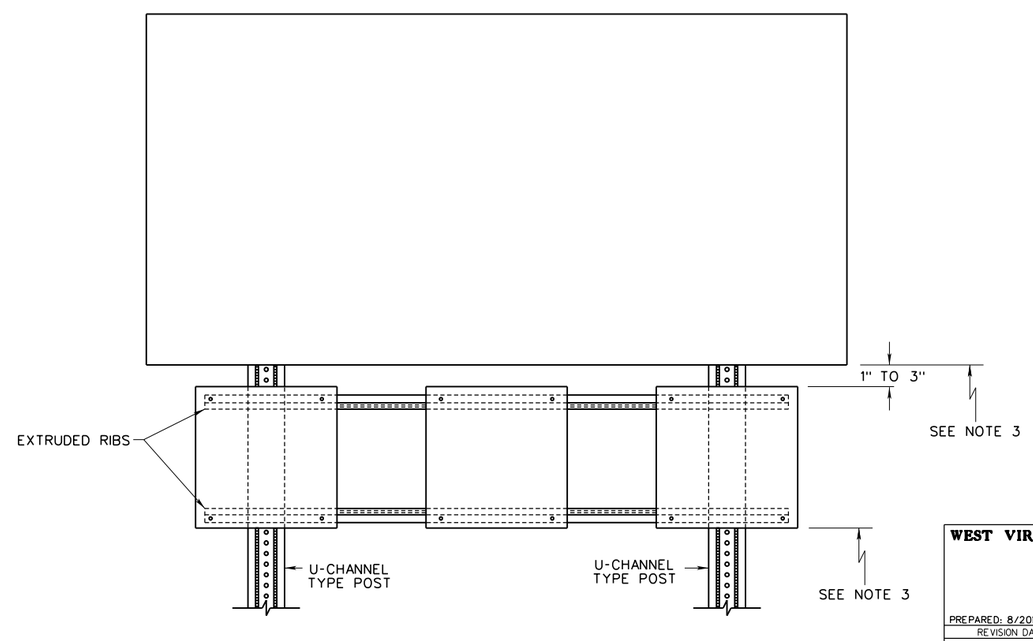

U-CHANNEL

PLAQUES MOUNTED TO MULTIPLE SUPPORTS

WEST VIRGINIA DEPARTMENT OF TRANSPORTATION
DIVISION OF HIGHWAYS
STANDARD DETAIL

PREPARED: 8/2018
REVISION DATE

TYPICAL SUPPLEMENTAL PLAQUE ARRANGEMENTS

STANDARD SHEET TP4-4

TRAFFIC ENGINEERING DIVISION

12/19/2018

Z:\Projects\WVDOT\Standard Details vol II\New_Sheets\Signing\TP4-4.dgn

J04C02C03-STDBDR c

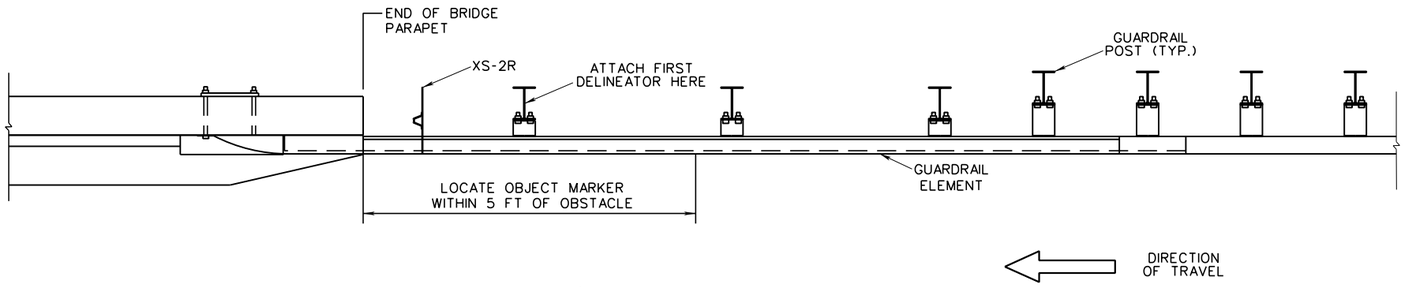

PLAN VIEW

AT BRIDGE PIERS

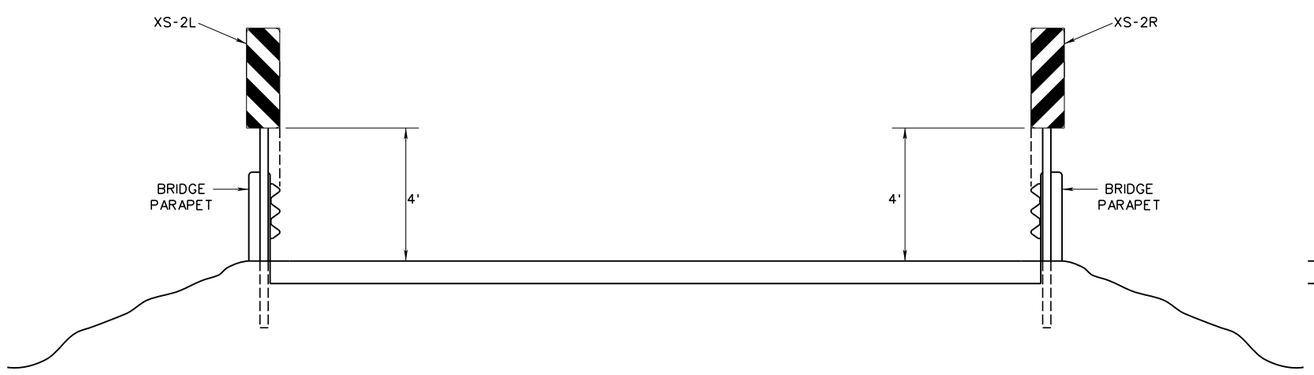

AT BRIDGE END PARAPET WALLS

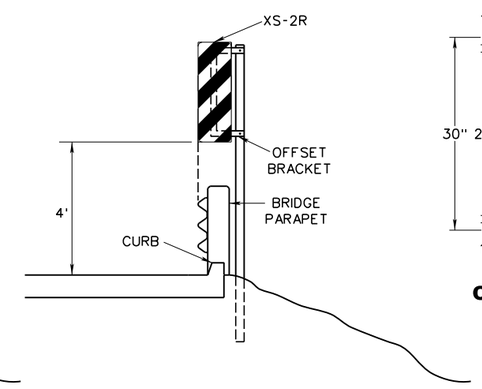

USING OFFSET BRACKET

OBJECT MARKER PLACEMENT DETAILS

GENERAL NOTES:

1. TYPICAL PLACEMENT OF XS-2L AND XS-2R OBJECT MARKERS AT THE APPROACH TO A BRIDGE END AND UNDERPASS ARE SHOWN.
2. THE DRAWINGS INDICATE THE APPROPRIATE MOUNTING HEIGHT FOR THE OBJECT MARKER ABOVE THE EDGE OF TRAVELED WAY.
3. LONGITUDINALLY, THE MARKERS SHOULD BE WITHIN 5 FEET OF THE OBSTACLE THAT IS BEING MARKED.
4. LATERALLY, IT IS PREFERABLE THAT THE MARKER BE PLACED SUCH THAT THE INSIDE EDGE OF THE MARKER IS IN LINE WITH THE INSIDE EDGE OF THE OBSTACLE BEING MARKED.
5. FOR OBSTACLE APPROACHES WITH GUARDRAIL, THE MARKER SUPPORT SHALL BE DRIVEN AS CLOSE AS POSSIBLE TO THE BACK OF THE GUARDRAIL ELEMENT. IF SITE CONDITIONS PREVENT THE POST FROM BEING DRIVEN IN A LOCATION THAT ALIGNS THE EDGE OF THE OBJECT MARKER WITH THE OBSTACLE, THEN AN OFFSET BRACKET SHALL BE USED.
6. WHEN GUARDRAIL IS PRESENT LEADING UP TO THE OBSTACLE, SUCH AS IN THE EXAMPLES SHOWN, GUARDRAIL DELINEATORS AS SHOWN ON SHEET TE11-2A AT A REDUCED SPACING OF 50 FEET SHALL BE PLACED ON THE APPROACH TO THE OBSTACLE. ONE GUARDRAIL DELINEATOR SHALL BE PLACED AT THE LAST GUARDRAIL SUPPORT PRIOR TO THE OBSTACLE. FOUR ADDITIONAL DELINEATORS AT APPROXIMATELY 50 FOOT SPACING SHALL BE PLACED AT GUARDRAIL SUPPORTS LEADING UP TO THE DELINEATOR NEAREST THE OBSTACLE.

   IF THE LENGTH OF THE GUARDRAIL ON THE APPROACH TO THE OBSTACLE IS LESS THAN 200 FEET, THE DELINEATOR SPACING SHALL BE REDUCED AS NEEDED WITH THE SPACING KEPT AS CONSISTENT AS POSSIBLE.

   IF THE APPROACH GUARDRAIL IS LESS THAN 100 FEET, THE NUMBER OF DELINEATORS MAY BE REDUCED TO FOUR.

   IF THE APPROACH GUARDRAIL IS LESS THAN 75 FEET, THE NUMBER OF DELINEATORS MAY BE REDUCED TO THREE.

   GUARDRAIL FORMED INTO A RADIUS IN ORDER TO ACCOMMODATE AN INTERSECTING ROUTE OR DRIVEWAY ON THE APPROACH TO THE BRIDGE END SHALL NOT BE CONSIDERED TO BE PART OF THE APPROACH GUARDRAIL.
7. FOR BRIDGE UNDERPASS SITUATIONS WHERE THE BRIDGE PIER OBSTACLE HAS A FLAT FACE, THE OBJECT MARKER MAY BE MOUNTED DIRECTLY TO THE FACE OF THE PIER. IT SHALL BE MOUNTED THE APPROPRIATE MOUNTING HEIGHT AND WITH THE INSIDE EDGE OF THE MARKER ALIGNED WITH THE INSIDE EDGE OF THE PIER. ATTACHMENT METHOD TO BE APPROVED BY THE ENGINEER.
8. OFFSET BRACKET TO BE FULLY GALVANIZED AFTER FABRICATION.
9. SEE DESIGN GUIDE FOR SIGNING FOR OBJECT MARKER WARRANTS.

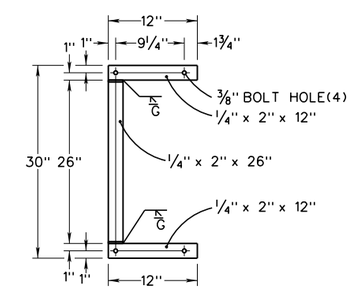

OFFSET BRACKET

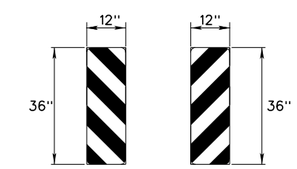

XS-2L **XS-2R**

OBJECT MARKER DETAILS

WEST VIRGINIA DEPARTMENT OF TRANSPORTATION
DIVISION OF HIGHWAYS
STANDARD DETAIL

PREPARED: 8/2018

REVISION DATE

TYPICAL OBJECT MARKER AND DELINEATOR LAYOUT FOR BRIDGES AND UNDERPASSES

STANDARD SHEET TP5-2

12/19/2018

Z:\Projects\WVDOT\Standard Details vol II\New_Sheets\Signing\TP5-2.dgn

J04C02C03-STDBOR c

TRAFFIC ENGINEERING DIVISION

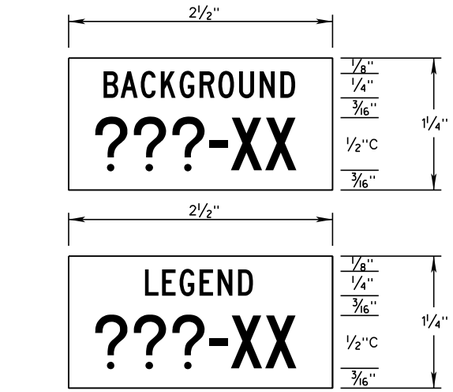

BLACK NON-REFLECTIVE LEGEND, NO BORDER
WHITE REFLECTIVE SHEETING BACKGROUND

??? TO BE ABBREVIATION OF SHEETING MANUFACTURER
XX TO BE TYPE OF SHEETING AS PER ASTM D4956-04

SHEETING DECAL

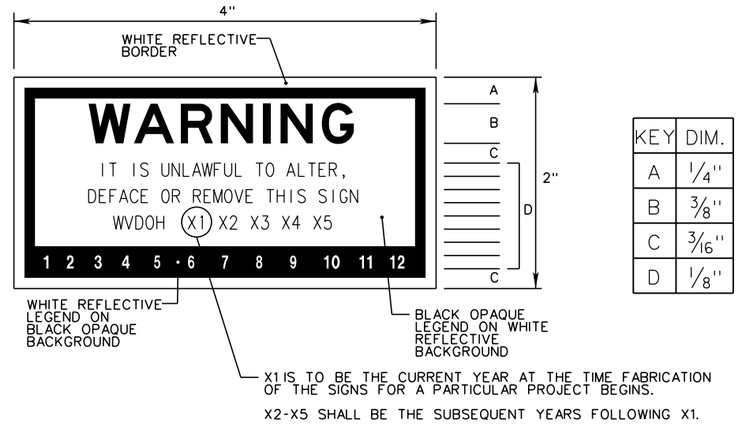

KEY	DIM.
A	¼"
B	⅜"
C	3/16"
D	⅛"

INSTALLATION DATE DECAL

GENERAL NOTES

1. DECALS SHALL BE APPLIED TO THE BACK OF THE SIGN IN THE LOWER QUADRANT ON THE SIDE OF THE SIGN ADJACENT TO THE TRAVELWAY OF EACH SIGN IN THE ASSEMBLY. DECAL MAY BE MOVED INTO THE UPPER QUADRANT IF NEEDED TO IMPROVE VISIBILITY FROM THE GROUND.
2. FLAT SHEET SCREENED SIGNS AND FABRICATED FLAT SHEET SIGNS WITH DIRECT APPLIED COPY SHALL HAVE TWO SEPARATE DECALS, ONE INSTALLATION DATE DECAL AND ONE BACKGROUND SHEETING DECAL.
3. EXTRUDED PANEL SIGNS SHALL HAVE THREE SEPARATE DECALS, ONE INSTALLATION DATE DECAL, ONE BACKGROUND SHEETING DECAL AND ONE LEGEND SHEETING DECAL.
4. DECALS SHALL ALSO BE APPLIED TO THE UPRIGHT OF OVERHEAD SIGN STRUCTURES FOR EACH SIGN ON THE STRUCTURE. FOR STRUCTURES WITH MORE THAN ONE SIGN, DECALS SHALL BE ARRANGED VERTICALLY ON THE UPRIGHT. DECAL ORDER TO BE TOP TO BOTTOM FOR SIGNS LEFT TO RIGHT FROM THE VANTAGE POINT OF THE UPRIGHT. DECALS SHALL BE APPLIED TO THE UPRIGHT FACING APPROACHING TRAFFIC. FOR FULL SPAN STRUCTURES, DECALS ARE TO BE APPLIED ON THE UPRIGHT ON THE EASTBOUND OR NORTHBOUND SIDE, AS APPROPRIATE.
5. ALL DECALS ARE TO BE PROVIDED BY THE SIGN FABRICATOR. THE YEAR AND MONTH OF INSTALLATION ARE TO BE PUNCHED OUT BY THE CONTRACTOR PRIOR TO BEING APPLIED TO THE SIGN IN THE FIELD.
6. DECALS SHALL BE APPLIED IN A LOCATION THAT ALLOWS THEM TO BE EASILY VISIBLE FROM THE GROUND AND SHALL NOT BE OBSTRUCTED BY SIGN SUPPORT HARDWARE. DECALS MAY BE ROTATED 90 DEGREES ON NARROW SIGNS.

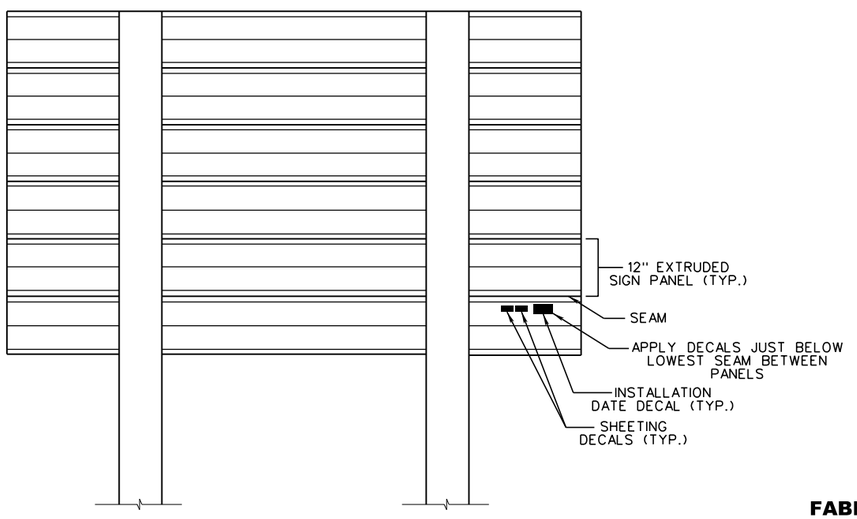

EXTRUDED PANEL SIGNS WITH DEMOUNTABLE COPY

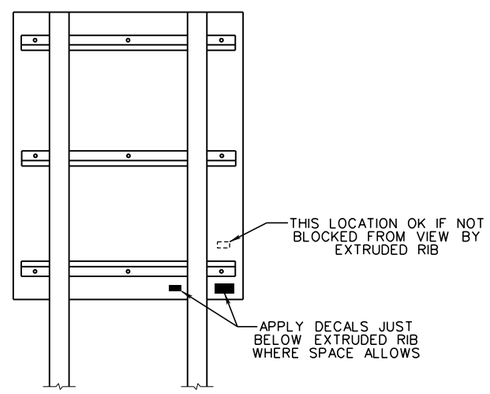

STANDARD SIGNS OR FABRICATED FLAT SHEET SIGNS WITH DIRECT APPLIED COPY

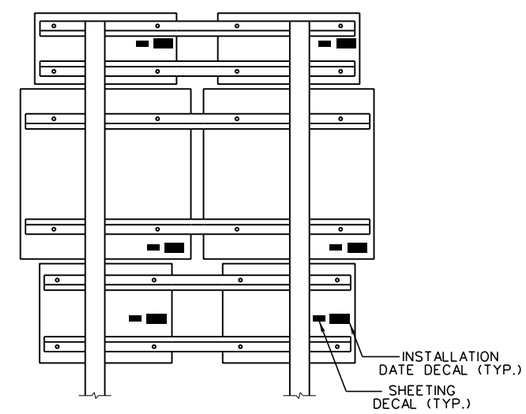

MULTI-SIGN ASSEMBLIES

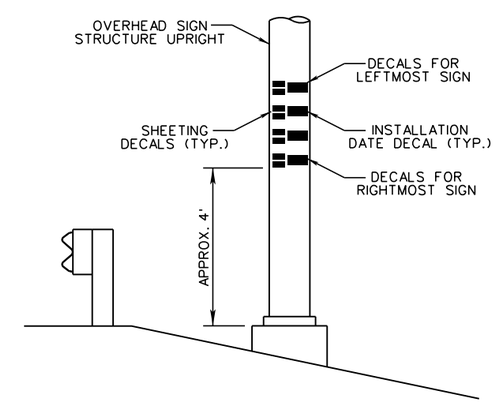

OVERHEAD SIGN STRUCTURES

SIGN IDENTIFICATION DECAL PLACEMENT

LOOKING AT SIGN BACK

WEST VIRGINIA DEPARTMENT OF TRANSPORTATION
DIVISION OF HIGHWAYS
STANDARD DETAIL

PREPARED: 8/2018
REVISION DATE

SIGN IDENTIFICATION DECALS

STANDARD SHEET TP6-1

TRAFFIC ENGINEERING DIVISION

J04C02C03-STDBOR c
Z:\Projects\WVDOT\Standard Details vol II\New_Sheets\Signing\TP6-1.dgn
12/19/2018

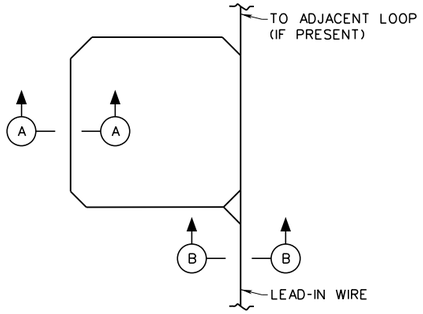

LOOP WIRE PLAN

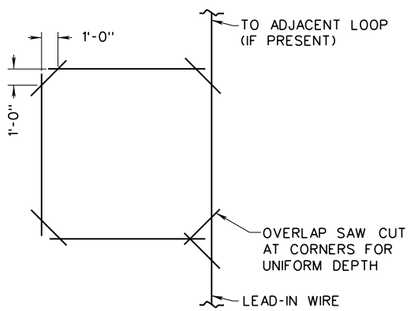

SAW CUT DIAGRAM

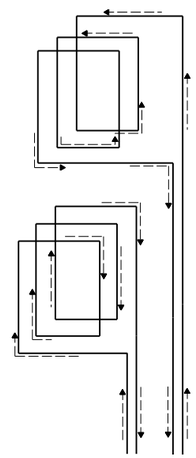

ADJACENT LOOP WINDING

DEPTH	NO. OF WIRES				
	1	2	3	4	6
D-1	1.5"	2.0"	2.0"	2.5"	3.0"
D-2	—	2.0"	2.0"	2.5"	3.0"
D-3	2.0"	2.0"	2.5"	3.0"	3.0"

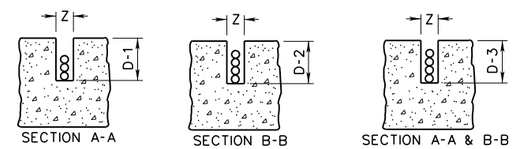

LOOP IN CONCRETE **LOOP IN ASPHALT**

SAW SLOT DETAIL

GENERAL NOTES:

SAW SLOT AND LOOP WIRE:

1. THE "Z" DIMENSION SHALL BE LARGE ENOUGH TO ACCOMMODATE THE LOOP WIRE WITHOUT CHAFING THE INSULATION WITH A MAXIMUM DIMENSION OF 3/16 IN.
2. ALL CORNERS OF THE LOOP SHALL BE CUT AT A 45° ANGLE AND HAVE A MINIMUM DIAGONAL LENGTH OF 16 IN.
3. ALL WIRE SHALL BE PUSHED INTO THE SAW CUT WITH WOOD STICKS TO INSURE THE INSULATION IS NOT SCARRED. THE USE OF METAL TOOLS IS NOT PERMITTED.
4. THE NUMBER OF TURNS OF LOOP WIRE IS SPECIFIED ON THE CONTRACT PLANS FOR EACH INDIVIDUAL LOOP.
5. THE "X" DIMENSION SHALL BE 6 FT. UNLESS OTHERWISE SPECIFIED ON THE CONTRACT PLANS.
6. QUADRUPOLE LOOP SHALL BE 6 FT. WIDE BY 40 FT. LONG UNLESS OTHERWISE SPECIFIED ON CONTRACT PLANS.

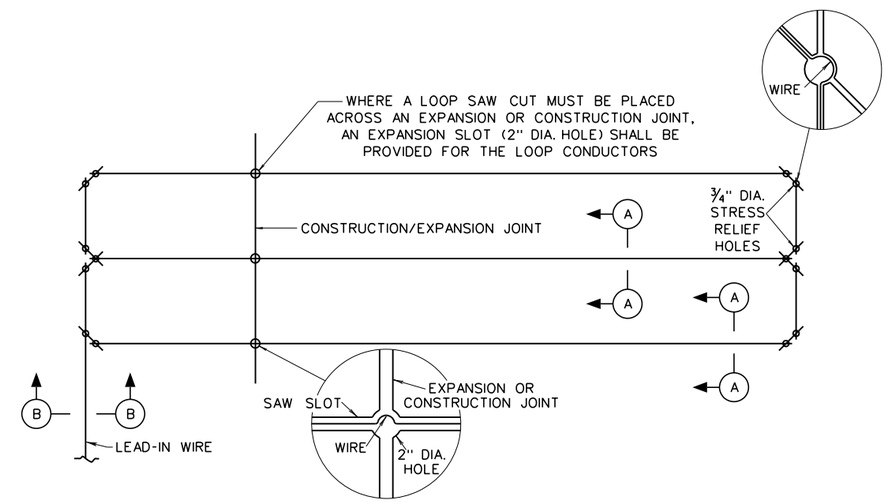

QUADRUPOLE LOOP

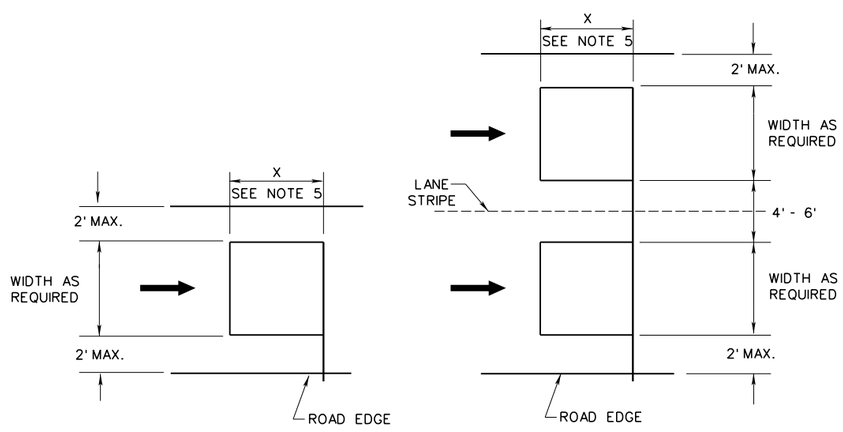

ONE LANE COVERAGE **TWO LANE COVERAGE ✱** **THREE LANE COVERAGE ✱**

TYPICAL LANE COVERAGE DIAGRAM

✱-SEE WINDING DETAIL ABOVE

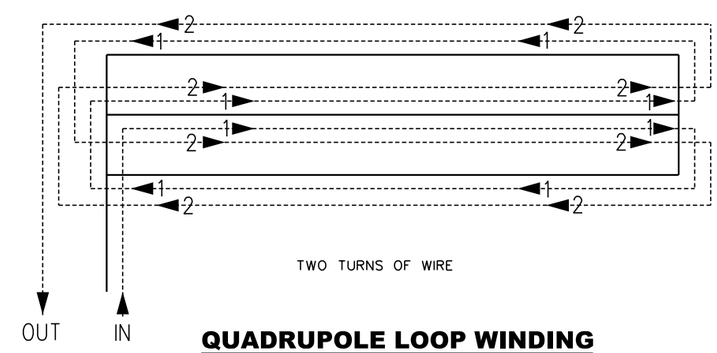

QUADRUPOLE LOOP WINDING

WEST VIRGINIA DEPARTMENT OF TRANSPORTATION
DIVISION OF HIGHWAYS
STANDARD DETAIL

PREPARED: 8/2018

REVISION DATE

LOOP DETECTOR INSTALLATION

STANDARD SHEET TES-01

TRAFFIC ENGINEERING DIVISION

12/19/2018

Z:\Projects\WVDOT\Standard Details vol II\New_Sheets\Signals\TES-01.dgn

J04C02C03-STDBOR c

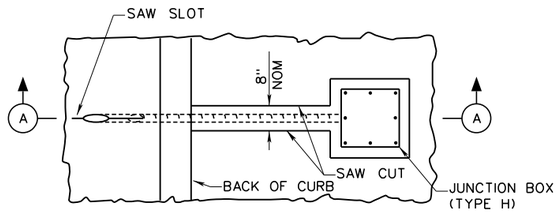

UNDERGROUND INSTALLATION PLAN

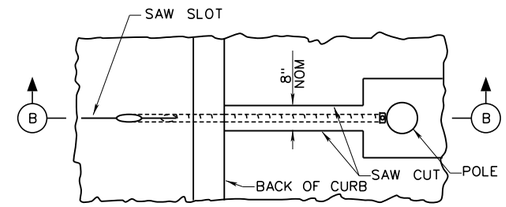

OVERHEAD INSTALLATION PLAN

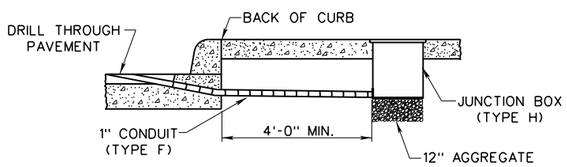

SECTION A-A

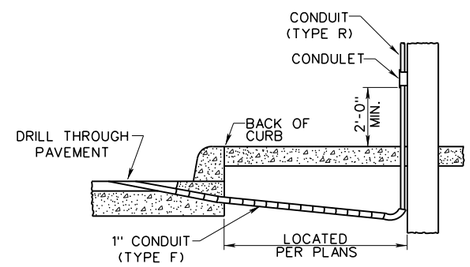

SECTION B-B

TYPICAL SECTION IN GUTTER AND SIDEWALK

GENERAL NOTES:

1. JUNCTION BOXES:
   WHEN TYPE H JUNCTION BOXES ARE SPECIFIED ON THE CONTRACT PLANS, THE COVER ELEVATION SHALL BE THE SAME AS THE EXISTING GRADE OR IMPROVED SHOULDER GRADE.

2. PVC COATED GALVANIZED RIGID STEEL CONDUIT (PVCGRSC):
   ALL CONDUIT UNDER ROADWAY OR SIDEWALK SHALL BE PVC COATED GALVANIZED RIGID STEEL CONDUIT OR AS SPECIFIED ON THE PLANS.

3. TYPES OF CONDUIT:
   TYPE R - RIGID STEEL CONDUIT, INCLUDES PVCGRSC;
   TYPE F - FLEXIBLE, LIQUID-TIGHT CONDUIT;
   TYPE P - POLYVINYL CHLORIDE CONDUIT.

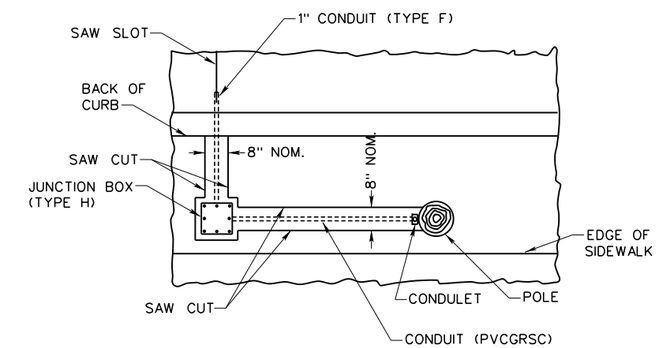

TYPICAL PLAN IN GUTTER AND SIDEWALK

WHEN UNDERGROUND CONDUIT IS GREATER THAN 10' FROM CURB TO POLE USE JUNCTION BOX

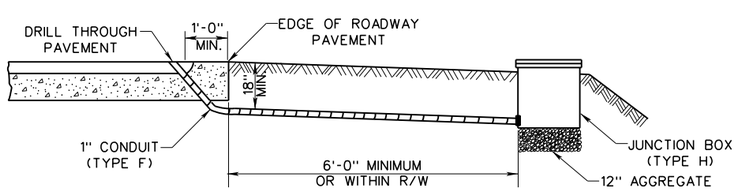

UNDERGROUND INSTALLATION

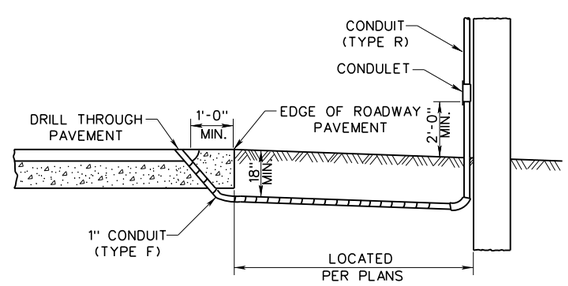

OVERHEAD INSTALLATION

TYPICAL SECTION IN BERM

WEST VIRGINIA DEPARTMENT OF TRANSPORTATION
DIVISION OF HIGHWAYS
STANDARD DETAIL

PREPARED: 8/2018
REVISION DATE

LOOP DETECTOR INSTALLATION

STANDARD SHEET TES-02

TRAFFIC ENGINEERING DIVISION

12/19/2018

Z:\Projects\WVDOT\Standard Details vol II\New_Sheets\Signals\TES-02.dgn

J04C02C03-STDBOR c

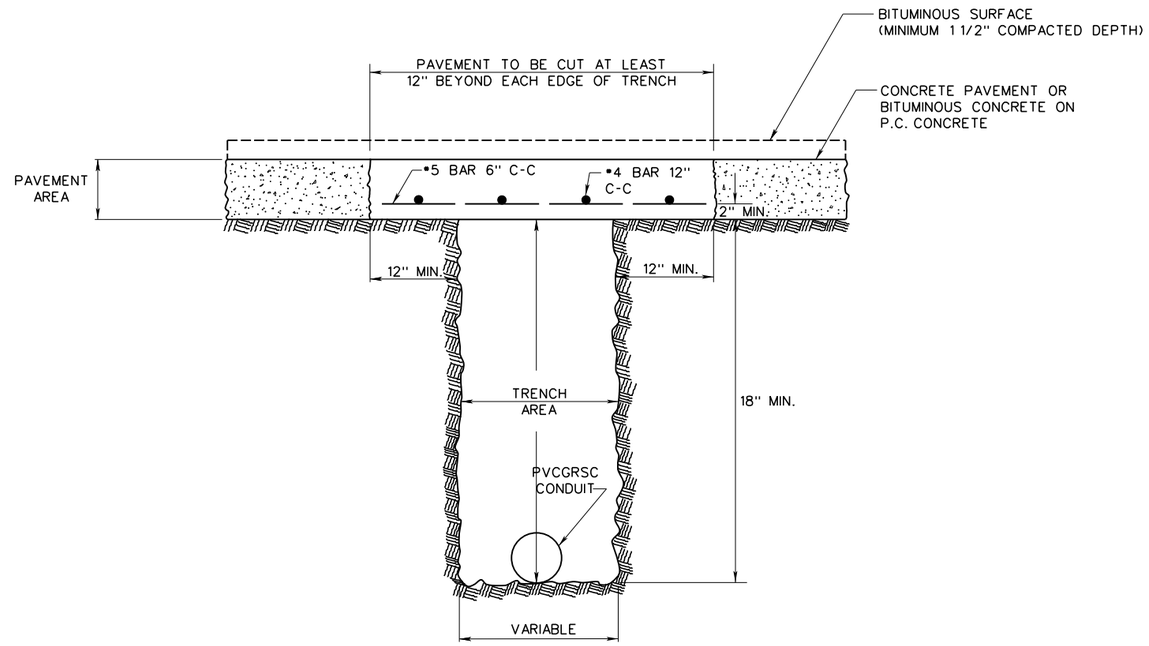

MINIMUM REPLACEMENT REQUIREMENT FOR RIGID OR FLEXIBLE PAVEMENT CUTS (INCLUDING BASE & SUB-BASE)

GENERAL NOTES

1. REPLACING TRENCH AREA: THE TRENCH AREA SHALL BE BACKFILLED WITH CLASS 1 AGGREGATE BASE COURSE MATERIAL IN FOUR INCH COMPACTED LAYERS. SEE WVDOH STANDARD SPECIFICATIONS SECTION 307.

2. REPLACING PAVEMENT AREA:
   A. CONCRETE USED TO REPLACE PAVEMENT AREA OF CUT SHALL BE CLASS B PORTLAND CEMENT CONCRETE.
   B. IN REPLACING CONCRETE PAVEMENTS WHICH HAVE BEEN BITUMINOUS SURFACED, THE PORTLAND CEMENT CONCRETE SHALL BE REPLACED TO AN ELEVATION ONE AND A HALF INCH (1½ IN.) BELOW THE FINISHED GRADE OF THE EXISTING BITUMINOUS SURFACE. BITUMINOUS CONCRETE SHALL BE USED TO COMPLETE THE PAVEMENT REPLACEMENT TO EXISTING SURFACE ELEVATION. SEE WVDOH STANDARD SPECIFICATION SECTION 401.
   C. IN ADDITION TO THE NEW REINFORCING BARS SHOWN; IF THERE IS EXISTING REINFORCING IN THE PAVEMENT IT SHALL BE BENT UP AND THEN BACK INTO THE NEW CONCRETE.

3. SEE TEL-30 FOR DETAILS FOR CONDUIT INSTALLATION UNDERNEATH TRAVELED LANES.

4. SEE VOLUME I STANDARD SHEET DR-9 FOR ADDITIONAL TRENCH DETAILS.

WEST VIRGINIA DEPARTMENT OF TRANSPORTATION
DIVISION OF HIGHWAYS
STANDARD DETAIL

PREPARED: 8/2018

REVISION DATE

CONDUIT TRENCH PAVEMENT REPLACEMENT

STANDARD SHEET TES-04

TRAFFIC ENGINEERING DIVISION

12/19/2018

Z:\Projects\WVDOT\Standard Details vol II\New_Sheets\Signals\TES-04.dgn

J04C02C03-STDBDR c

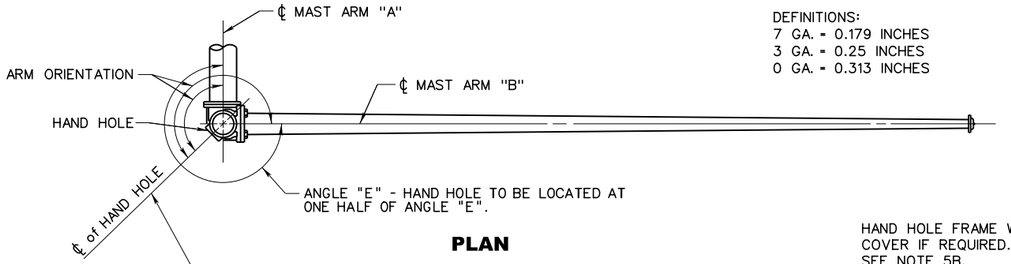

DEFINITIONS:
7 GA. = 0.179 INCHES
3 GA. = 0.25 INCHES
0 GA. = 0.313 INCHES

PLAN

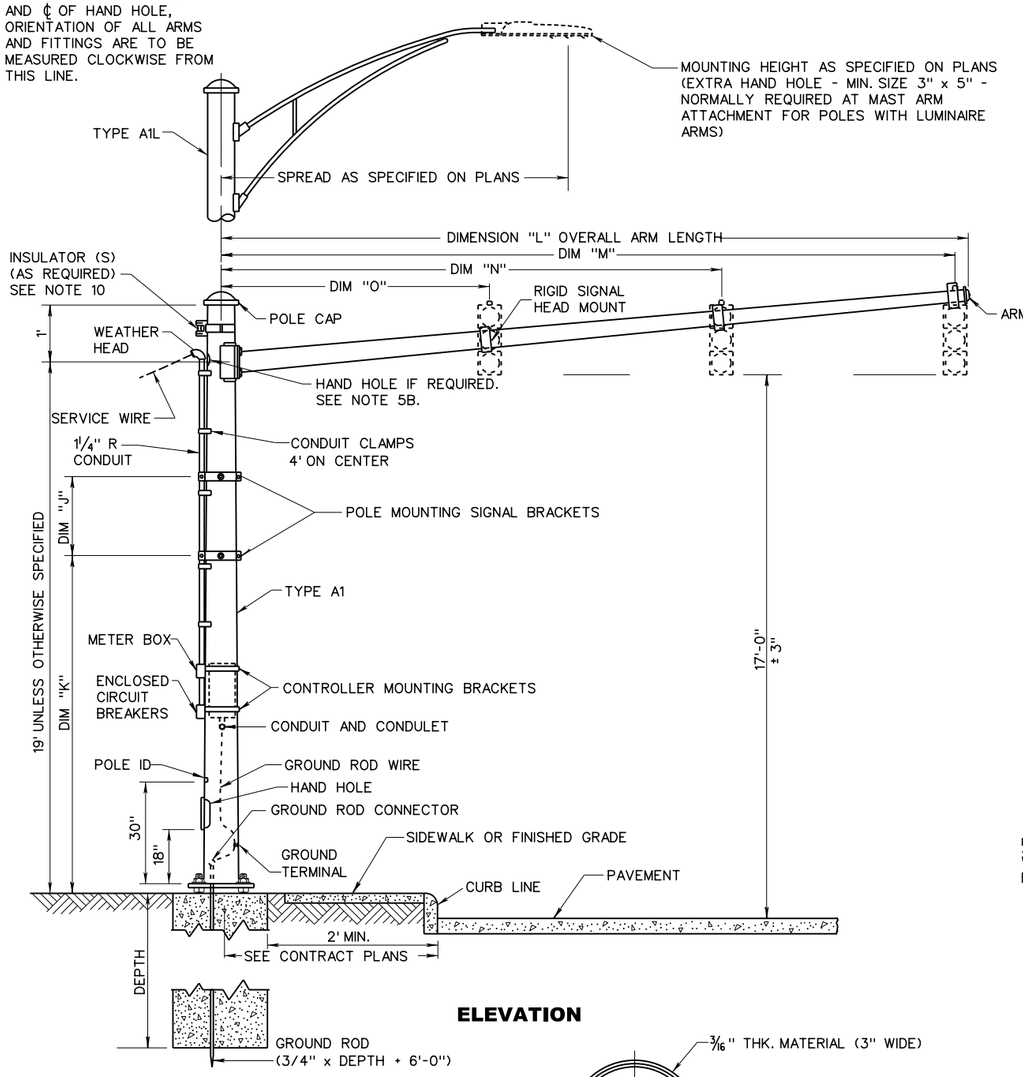

ELEVATION

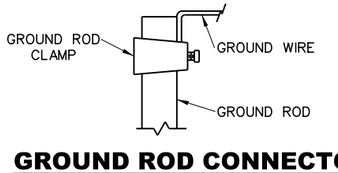

GROUND ROD CONNECTOR

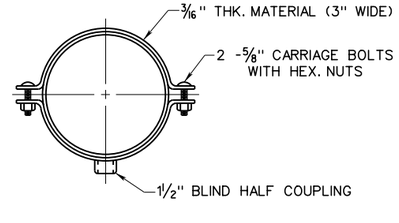

POLE MOUNTING SIGNAL BRACKET

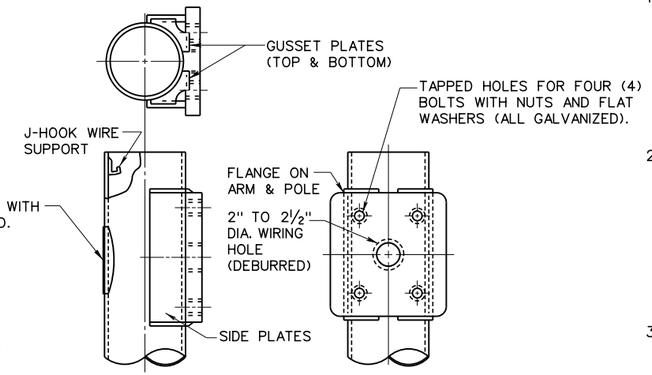

FILLET-WELDED, GUSSETED-BOX CONNECTION TYPE SHOWN. FILLET-WELDED, RING-STIFFENED BOX CONNECTION TYPE MAY ALSO BE USED.

ARM ATTACHMENT

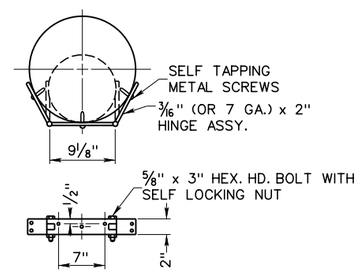

POLE MOUNTING BRACKET FOR CONTROLLER & DETECTOR CABINETS

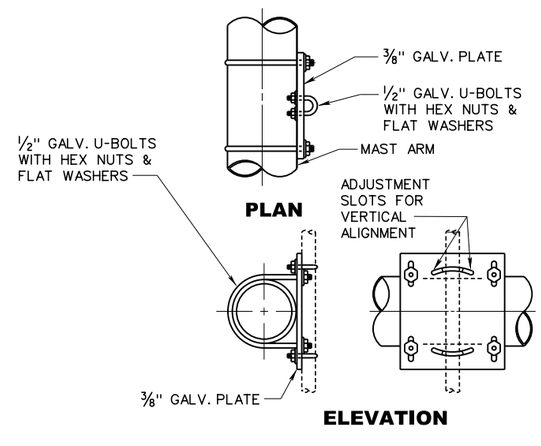

RIGID MOUNTING SIGNAL BRACKET

GENERAL NOTES

1. SIGNAL HEADS:
   A. THE RED SECTIONS OF ALL SIGNALS ON A SINGLE MAST ARM SHALL BE LEVEL WITH EACH OTHER IF POSSIBLE. SEE NOTE B.
   B. THE ELEVATION OF THE RED SECTIONS SHALL BE SET SO THAT NO SIGNAL HEAD HAS A VERTICAL CLEARANCE LESS THAN 17 FEET (PLUS OR MINUS 3 INCHES), UNLESS OTHERWISE SPECIFIED.
   C. POST MOUNTED SIGNAL HEADS SHALL BE MOUNTED AT A HEIGHT SPECIFIED ON THE CONTRACT PLANS (DIMENSION "K").

2. POLE:
   A. POLE SIZING TO BE IN ACCORDANCE WITH THE AASHTO STANDARD SPECIFICATIONS FOR STRUCTURAL SUPPORTS FOR HIGHWAY SIGNS, LUMINAIRES, AND TRAFFIC SIGNALS, 6TH EDITION, 2013, USING 90 MPH WIND SPEED AND FATIGUE CATEGORY I.
   B. EACH POLE SHALL BE COMPLETE WITH POLE, ARM(S), CAPS, J-HOOK, AND HAND HOLE(S).
   C. POLE DIMENSIONS (J, K, L, M, N & O) ARE NOTED ON THE CONTRACT PLANS.
   D. SEE TES-40 FOR FOUNDATION DETAILS. SEE TES-41 FOR POLE BASE DETAILS AND POLE ID.
   △1 E. ALL MATERIALS THAT MAKE UP THE POLE ASSEMBLY SHALL MEET THE REQUIREMENTS OF SECTION 715.42.9.1 OF THE SPECIFICATIONS.

3. CONDUIT:
   A. CONDUIT FOR THE POWER SUPPLY SHALL BE FASTENED TO THE POLE WITH CONDUIT CLAMPS 4 FEET C.C.
   B. CONDUIT CLAMPS SHALL BE FASTENED TO THE POLE WITH SELF TAPPING SCREWS.

4. CONTROLLER MOUNTING BRACKET:
   A. WHEN CONTROLLER CABINET OR CABINETS ARE TO BE MOUNTED ON A POLE, THE POLE SHALL BE COMPLETE WITH TWO BRACKETS PER CABINET.
   B. THE MOUNTING HEIGHT OF THE CONTROLLER CABINET SHALL BE AS SPECIFIED IN THE CONTRACT PLANS.
   C. CONTRACTOR SHALL FIELD DRILL THE HOLES FOR THE SELF-TAPPING SCREWS AFTER FINAL POSITION HAS BEEN DETERMINED.

5. HAND HOLES:
   A. THE HAND HOLE IN THE BASE SHALL BE A MINIMUM SIZE OF 4 IN. x 6½ IN. AND LOCATED 18 IN. ABOVE BASE PLATE.
   B. THE HAND HOLE AT THE MAST ARM (FOR POLE HEIGHTS GREATER THAN 20 FEET OR POLES WITH LUMINAIRE ARMS) SHALL BE A MINIMUM SIZE OF 3 IN x 5 IN.
   C. THE HAND HOLE SHALL BE LOCATED 180° FROM MAST ARM "A" FOR A SINGLE MAST ARM. SEE THE PLAN VIEW TOP LEFT FOR ARM ORIENTATION GUIDANCE WHEN TWO MAST ARMS ARE USED. THIS HOLE MAY BE SHOP DRILLED BY THE MANUFACTURER.

6. SIGNAL HEAD MOUNTING BRACKET:
   A. WHEN POST MOUNT SIGNALS ARE CALLED FOR ON CONTRACT PLANS, THE POLE SHALL BE COMPLETE WITH TWO BRACKETS PER SIGNAL CONFIGURATION.
   B. THE ONE (1) INCH HOLE FOR THE SIGNAL HEAD MOUNTING BRACKET SHALL BE DRILLED AND DEBURRED AFTER THE FINAL POSITION OF THE SIGNAL HEAD HAS BEEN DETERMINED. THIS HOLE MAY BE DRILLED BY THE MANUFACTURER.

7. SIGNAL HANGER:
   A. ONE SIGNAL HEAD HANGER IS REQUIRED FOR EACH SUSPENDED SIGNAL HEAD.
   B. EACH WIRE OUTLET SHALL BE DEBURRED AND BE PROTECTED BY A RUBBER GROMMET.

8. ANCHOR BOLTS:
   A. ANCHOR BOLT DETAILS ARE NOTED ON TES-40.
   B. A MINIMUM OF ONE FULL BOLT THREAD SHALL EXTEND ABOVE THE ANCHOR NUT.
   C. ANCHOR BOLTS SHALL BE FULLY GALVANIZED.
   D. ANCHOR BOLTS SHALL NOT BE COVERED.

9. WELDING:
   A. CONNECTION SHALL BE DESIGNED FOR THE LOAD ON THE MEMBERS BUT NOT LESS THAN 100 PERCENT OF THE STRENGTH OF THE MEMBERS. MINIMUM FILLET WELD TO BE 1/4".
   B. WELDING DETAILS SHALL BE SHOWN ON THE SHOP DRAWINGS FOR VERIFICATION AND APPROVAL.

10. INSULATORS:
   A. INSULATORS SHALL BE INSTALLED WHEN SECONDARY POWER IS CARRIED PAST THE SIGNAL POLE INSTALLATION.
   B. SINGLE INSULATORS SHALL BE USED TO CARRY INTERCONNECT WIRE PAST THE INSTALLATION.
   C. INSULATOR MAY BE MOUNTED ON EITHER SIDE OF THE POLE.

11. LUMINAIRE MOUNTING BRACKET (TYPE A1L):
   A. SPREAD IS SPECIFIED ON THE CONTRACT PLANS.
   B. LUMINAIRE SHALL BE CONNECTED TO THE BRACKET WITH A SLIP FIT TYPE CONNECTION.
   C. BRACKET SHALL BE CONNECTED TO THE POLE SO THE STRENGTH OF THE CONNECTION EXCEEDS THE STRENGTH OF THE BRACKET.

12. GROUNDING: SEE TES-40 FOR NOTES.

13. SEE TES-11 FOR POLE SELECTION CHARTS AND MEMBER TABLES.

△1 REVISED SPECIFICATION SECTION REFERENCE

WEST VIRGINIA DEPARTMENT OF TRANSPORTATION
DIVISION OF HIGHWAYS
STANDARD DETAIL

PREPARED: 8/2018
REVISION DATE
△1 7/21/2023

MAST ARM
TYPES A1 AND A1L

STANDARD SHEET TES-10

TRAFFIC ENGINEERING DIVISION

Z:\Projects\WVDOT\Standard Details vol II\Final Submittal\Revised DGNs\Revised 8-2023\TES-10 Rev 7-21-2023.dgn
8/17/2023
J04C02C03-STDBDR c

POLE DESIGN NUMBER TO BE AS FOLLOWS:

POLE TYPE - POLE DESIGNATION - POLE HEIGHT - ARM A LENGTH/ARM B LENGTH

POLE TYPE = A1 OR A1L
POLE DESIGNATION = A, B, C, D, E, F OR G
POLE HEIGHT = TOTAL HEIGHT IN FEET
ARM A LENGTH = DIMENSION L OF ARM A IN FEET
ARM B LENGTH = DIMENSION L OF ARM B IN FEET

EXAMPLE DESIGN NUMBER: A1-C-20-24/38

POLE SELECTION CHART

ARM A	ARM B: L (FT.)	NONE	UP TO 20	20.5-30	30.5-40	40.5-50	50.5-60
	UP TO 20	A	B	C	C	D	D
	20.5-30	B	C	C	C	D	E
	30.5-40	C	C	C	C	D	E
	40.5-50	D	D	D	D	E	E
	50.5-60	F	D	E	E	E	F
	60.5-70	E	SINGLE ARM ONLY				
	70.5-80	F	SINGLE ARM ONLY				

POLE MEMBER TABLE

POLE DESIGNATION	POLE DIAMETER (IN.)	WALL THICKNESS (GAUGE OR IN.)
A	10	7
B	12	3
C	16	3
D	20	3
E	21	0.5
F	22	0.626
G*	12	7

* POLE DESIGNATION G ONLY TO BE USED AT THE DIRECTION OF TRAFFIC ENGINEERING DIVISION.

ARM MEMBER TABLE

ARM LENGTH	INBOARD SECTION LENGTH (FT.)	INBOARD SECTION O.D. (IN.)	INBOARD SECTION GAUGE	OUTBOARD SECTION LENGTH** (FT.)	OUTBOARD SECTION O.D. (IN.)	OUTBOARD SECTION GAUGE
UP TO 20	20	7	7			
20.5-30	30	10	3			
30.5-40	40	11	3			
40.5-50	25	14	3	27	11.18	7
50.5-60	30	16.25	3	32.25	12.76	7
60.5-70	37.5	21	3	35	16.5	7
70.5-80	41	21	3	41	16.01	7

** LENGTH OF OUTBOARD SECTION TO BE ADJUSTED AS NECESSARY FOR ARM LENGTH REQUIRED.

NOTES:

1. USE THE POLE SELECTION CHART TO DETERMINE THE POLE DESIGNATION.
   - FOR EXAMPLE, IF ARM A IS 24 FT. LONG AND ARM B IS 38.5 FT. LONG, THE POLE DESIGNATION WOULD BE 'C'.
2. USE THE POLE MEMBER TABLE TO DETERMINE THE POLE SIZE.
   - FOR EXAMPLE, POLE DESIGNATION 'C' WOULD BE 16 IN. DIAMETER WITH A 3 GAUGE WALL THICKNESS.
3. USE THE ARM MEMBER TABLE TO DETERMINE THE SIZING OF THE ARM BASED ON THE ARM LENGTH. ARM LENGTHS ARE TO BE IN 0.5 FT INCREMENTS. ARM LENGTHS 40 FT. OR LESS WILL BE MADE UP OF A SINGLE PIECE, ARMS LONGER THAN 40 FT. WILL REQUIRE TWO SECTIONS TO MAKE UP THE TOTAL LENGTH USING A TELESCOPIC FIELD JOINT (DETAIL 1).
4. SEE POLE FOUNDATION CHART ON TES-40 FOR FOUNDATION, ANCHOR BOLT AND REINFORCEMENT DETAILS.

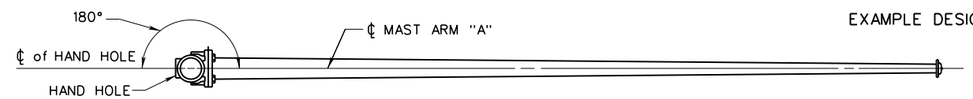

SINGLE MAST ARM

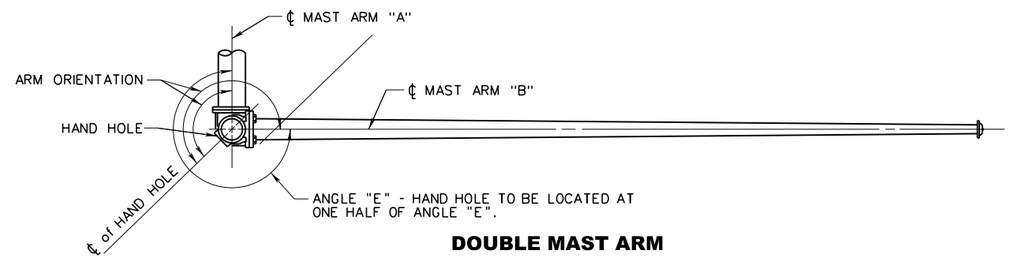

DOUBLE MAST ARM
PLAN

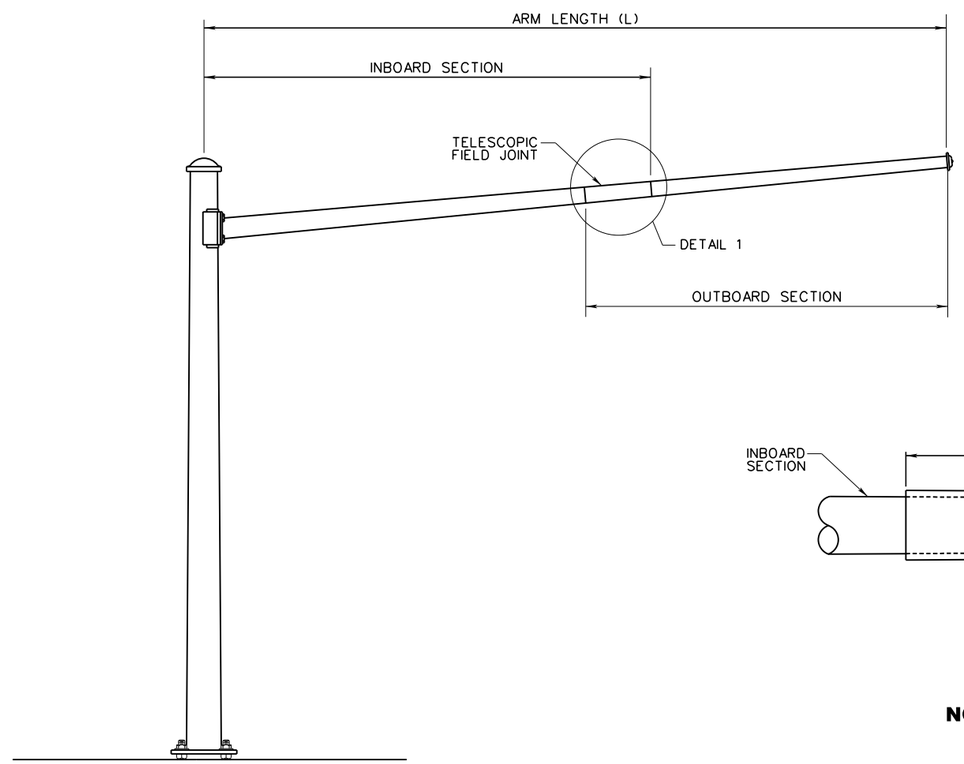

ELEVATION

DEFINITIONS:
7 GA. = 0.179 INCHES
3 GA. = 0.25 INCHES
0 GA. = 0.313 INCHES

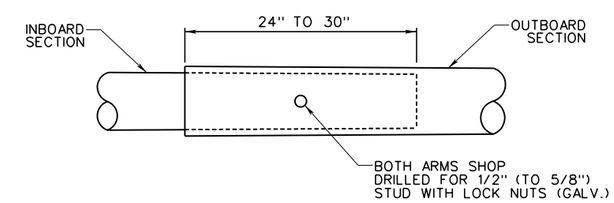

DETAIL 1
NOT TO SCALE

WEST VIRGINIA DEPARTMENT OF TRANSPORTATION
DIVISION OF HIGHWAYS
STANDARD DETAIL

PREPARED: 8/2018
REVISION DATE

MAST ARM POLE SELECTION CHARTS AND MEMBER TABLES

STANDARD SHEET TES-11

TRAFFIC ENGINEERING DIVISION

12/21/2018

Z:\Projects\WVDOT\Standard Details vol II\New_Sheets\Signals\TES-11.dgn

J04C02C03-STDBOR c

DEFINITIONS:
7 GA. = 0.179 INCHES
3 GA. = 0.25 INCHES
0 GA. = 0.313 INCHES

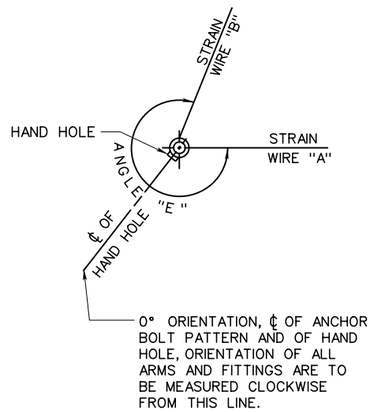

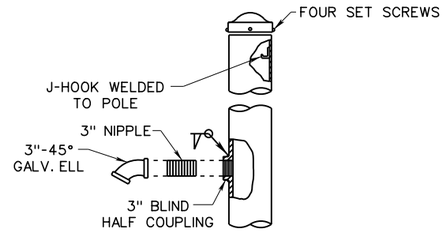

POLE WIRE INLET AND POLE CAP

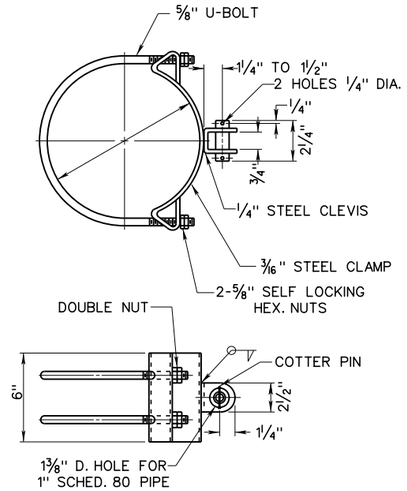

SPAN WIRE CLAMP

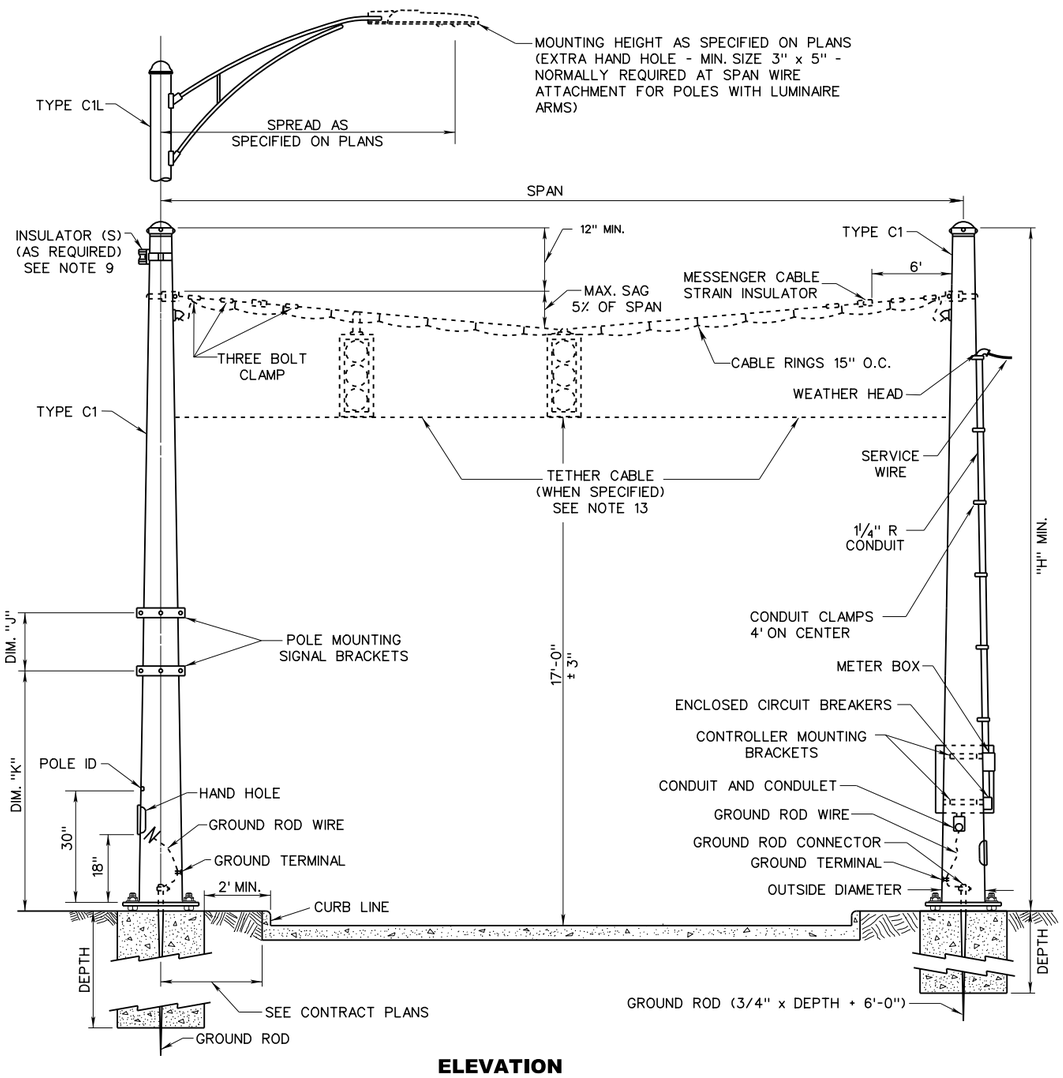

ELEVATION

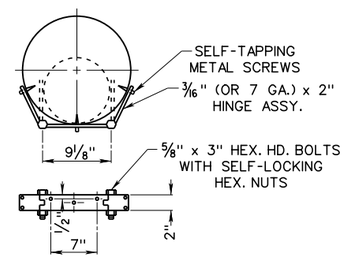

MOUNTING BRACKET FOR CONTROLLER CABINET

SEE NOTE 4B

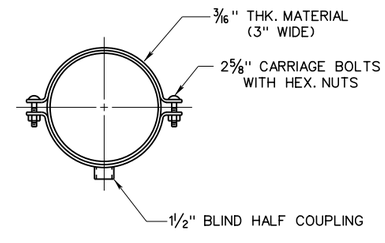

POLE MOUNTING SIGNAL BRACKET

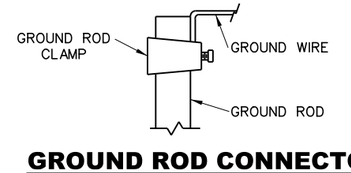

GROUND ROD CONNECTOR

GENERAL NOTES

1. SIGNAL HEADS:
   A. THE RED SECTIONS OF ALL SIGNALS ON A SINGLE SPAN WIRE SHALL BE LEVEL WITH EACH OTHER IF POSSIBLE, SEE NOTE B.
   B. THE ELEVATION OF THE RED SECTIONS SHALL BE SET SO THAT NO SIGNAL HEAD HAS A VERTICAL CLEARANCE LESS THAN 17 FEET (PLUS OR MINUS 3 INCHES), UNLESS OTHERWISE SPECIFIED.
   C. AT LEAST ONE HEAD, PER SPAN, SHALL BE DIRECTLY SECURED TO THE SPAN WIRE. IF APPROVED BY THE ENGINEER, THE REMAINING SIGNAL HEADS MAY BE PIPED TO ACHIEVE ROADWAY CLEARANCE.
   D. POST MOUNTED SIGNAL HEADS SHALL BE MOUNTED AT A HEIGHT SPECIFIED ON THE CONTRACT PLANS.

2. POLE:
   A. POLE SIZING TO BE IN ACCORDANCE WITH THE AASHTO STANDARD SPECIFICATIONS FOR STRUCTURAL SUPPORTS FOR HIGHWAY SIGNS, LUMINAIRES, AND TRAFFIC SIGNALS, 6TH EDITION, 2013 USING 90 MPH WIND SPEED AND FATIGUE CATEGORY I.
   B. EACH POLE SHALL BE COMPLETE WITH ONE POLE CAP, J-HOOK, WIRE CLAMP AND HAND HOLE.
   C. POLE DIMENSIONS (H, J AND K) ARE NOTED ON THE CONTRACT PLANS.
   D. SEE TES-40 FOR FOUNDATION DETAILS. SEE TES-41 FOR POLE BASE DETAILS AND POLE ID.
   △1 E. ALL MATERIALS THAT MAKE UP THE POLE ASSEMBLY SHALL MEET THE REQUIREMENTS OF SECTION 715.42.9.2 OF THE SPECIFICATIONS.

3. CONDUIT:
   A. CONDUIT FOR THE POWER SUPPLY SHALL BE FASTENED TO THE POLE WITH CONDUIT CLAMPS 4 FEET O.C.
   B. CONDUIT CLAMPS SHALL BE FASTENED TO THE POLE WITH SELF-TAPPING SCREWS.

4. CONTROLLER MOUNTING BRACKET:
   A. WHEN CONTROLLER CABINET OR CABINETS ARE TO BE MOUNTED ON A POLE, THE POLE SHALL BE COMPLETE WITH TWO BRACKETS PER CABINET.
   B. CABINET MOUNTING BRACKETS TO BE AS DETAILED HERE OR AS PER CABINET MANUFACTURER'S RECOMMENDATION.
   C. THE MOUNTING HEIGHT OF THE CONTROLLER CABINET IS SPECIFIED ON THE CONTRACT PLANS.
   D. CONTRACTOR SHALL FIELD DRILL THE HOLES FOR SELF-TAPPING SCREWS AFTER THE FINAL POSITION HAS BEEN DETERMINED.

5. HAND HOLES:
   A. THE HAND HOLE FRAME AND COVER SHALL BE A MINIMUM SIZE OF 4 IN. x 6 1/2 IN. AND LOCATED 18 IN. ABOVE BASE PLATE.
   B. THE HAND HOLE AT THE SPAN WIRE ATTACHMENT (FOR POLE HEIGHTS GREATER THAN 20 FEET OR POLES WITH LUMINAIRE ARMS) SHALL BE A MINIMUM SIZE OF 3 IN. x 5 IN.
   C. THE HAND HOLE FRAME AND COVER SHALL BE LOCATED 180° FROM THE STRAIN WIRE OR AT ONE-HALF THE ANGLE "E" WHEN TWO STRAIN WIRES ARE USED. THIS HOLE MAY BE SHOP DRILLED BY THE MANUFACTURER.

6. SIGNAL HEAD MOUNTING BRACKET:
   A. WHEN POST MOUNT SIGNALS ARE CALLED FOR ON CONTRACT PLANS. THE POLE SHALL BE COMPLETE WITH TWO BRACKETS PER SIGNAL CONFIGURATION.
   B. THE ONE (1) INCH HOLE FOR THE SIGNAL HEAD MOUNTING BRACKET SHALL BE DRILLED AND DEBURRED AFTER THE FINAL POSITION OF THE SIGNAL HEAD HAS BEEN DETERMINED. THIS HOLE MAY BE DRILLED BY MANUFACTURER.

7. ANCHOR BOLTS:
   A. ANCHOR BOLT DETAILS ARE NOTED ON TES-40.
   B. A MINIMUM OF ONE FULL BOLT THREAD SHALL REMAIN ABOVE THE ANCHOR NUT.
   C. ANCHOR BOLTS SHALL BE FULLY GALVANIZED.
   D. ANCHOR BOLTS SHALL NOT BE COVERED.

8. WELDING:
   A. CONNECTION SHALL BE DESIGNED FOR THE LOAD ON THE MEMBERS BUT NOT LESS THAN 100 PERCENT OF THE STRENGTH OF THE MEMBERS. MINIMUM FILLET WELD TO BE 1/4".
   B. WELDING DETAILS SHALL BE SHOWN ON THE SHOP DRAWINGS FOR VERIFICATION AND APPROVAL.

9. INSULATORS:
   A. INSULATORS SHALL BE INSTALLED WHEN SECONDARY POWER IS CARRIED PAST THE SIGNAL POLE INSTALLATION.
   B. SINGLE INSULATORS SHALL BE USED TO CARRY INTERCONNECT WIRE PAST THE INSTALLATION.
   C. INSULATORS MAY BE MOUNTED ON EITHER SIDE OF THE POLE.

10. LUMINAIRE MOUNTING BRACKET (TYPE C1L):
   A. SPREAD IS SPECIFIED ON THE CONTRACT PLANS.
   B. LUMINAIRE SHALL BE CONNECTED TO THE BRACKET WITH A SLIP FIT TYPE CONNECTION.
   C. BRACKET SHALL BE CONNECTED TO THE POLE SO THE STRENGTH OF THE CONNECTION EXCEEDS THE STRENGTH OF THE BRACKET.

11. MESSENGER CABLE (SEE TES-80 FOR DETAILS):
   A. THE SPAN WIRE CLAMP MAY BE MOUNTED EITHER ABOVE OR BELOW THE POLE WIRE INLET. THE POSITION OF THE SPAN WIRE CLAMP SHALL BE DETERMINED BY THE REQUIRED HEIGHT ABOVE THE PAVEMENT OF THE SIGNAL HEADS.
   B. SEE WEST VIRGINIA DIVISION OF HIGHWAYS STANDARD SPECIFICATIONS ROADS AND BRIDGES SECTION 715.42.12 FOR MESSENGER CABLE SIZE.

12. GUY WIRE AND ANCHORS: IF STRAIN POLE INSTALLATION REQUIRES GUY WIRING, SEE TES-23 FOR DETAILS AND NOTES.

13. SIGNAL TETHERING: IF SIGNAL TETHERING IS CALLED FOR IN THE CONTRACT PLANS, SEE TES-80 FOR DETAILS AND NOTES.

14. GROUNDING: SEE TES-40 FOR NOTES.

POLE DESIGN NUMBER TO BE AS FOLLOWS:

POLE TYPE - POLE DESIGNATION - POLE HEIGHT

POLE TYPE = C1 OR C1L
POLE DESIGNATION = R OR S
POLE HEIGHT = TOTAL HEIGHT IN FEET

EXAMPLE DESIGN NUMBER: C1-R-32

△1 REVISED SPECIFICATION SECTION REFERENCE

WEST VIRGINIA DEPARTMENT OF TRANSPORTATION
DIVISION OF HIGHWAYS
STANDARD DETAIL

PREPARED: 8/2018
REVISION DATE
△1 7/21/2023

STRAIN POLE TYPES C1 AND C1L

STANDARD SHEET TES-20

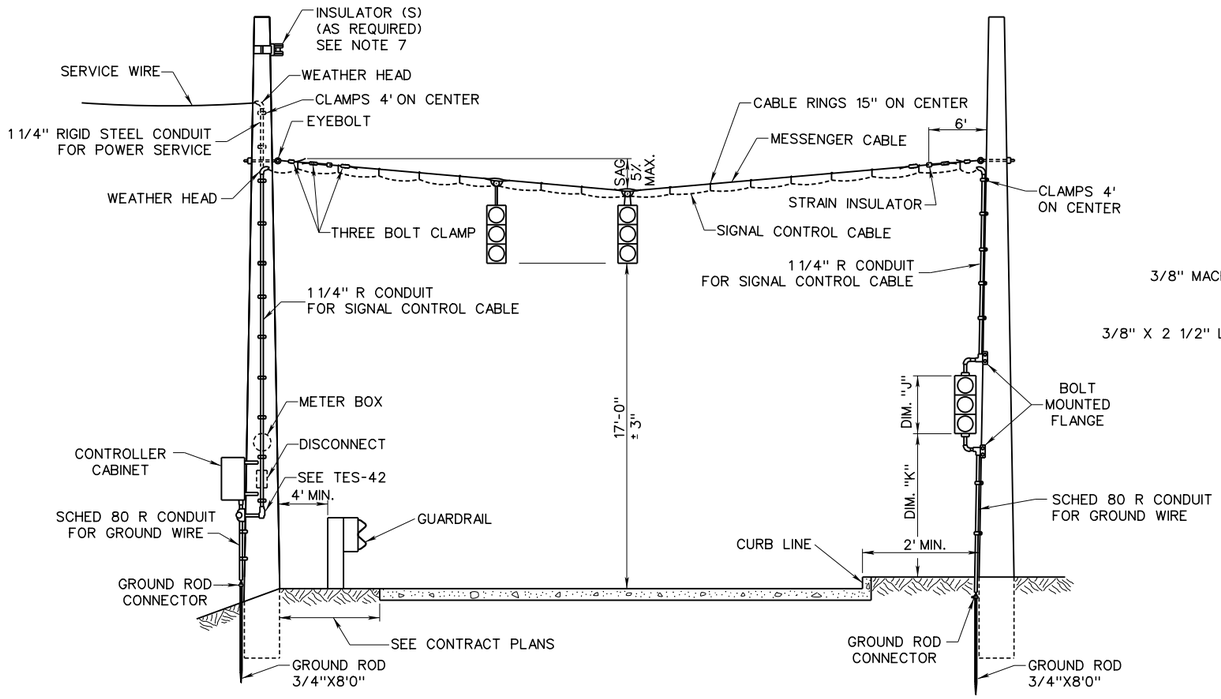

ELEVATION

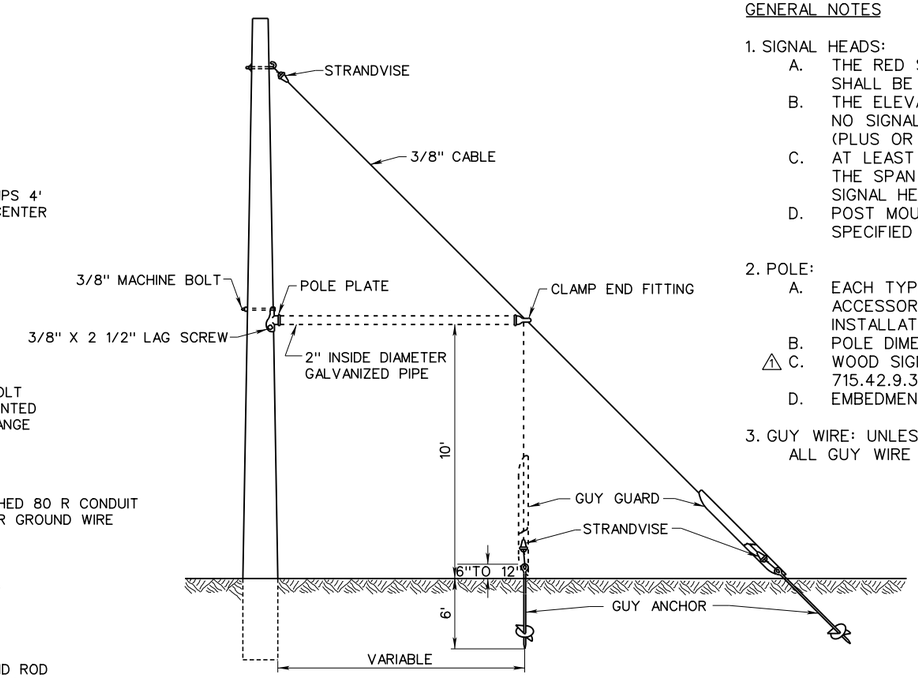

GUYING DETAILS

GENERAL NOTES

1. SIGNAL HEADS:
   A. THE RED SECTIONS OF ALL SIGNALS ON A SINGLE SPAN WIRE SHALL BE LEVEL WITH EACH OTHER.
   B. THE ELEVATION OF THE RED SECTIONS SHALL BE SET SO THAT NO SIGNAL HEAD HAS A VERTICAL CLEARANCE LESS THAN 17 FEET (PLUS OR MINUS 3 INCHES), UNLESS OTHERWISE SPECIFIED.
   C. AT LEAST ONE HEAD, PER SPAN, SHALL BE DIRECTLY SECURED TO THE SPAN WIRE. IF APPROVED BY THE ENGINEER, THE REMAINING SIGNAL HEADS MAY BE PIPED TO ACHIEVE ROADWAY CLEARANCE.
   D. POST MOUNTED SIGNAL HEADS SHALL BE MOUNTED AT A HEIGHT SPECIFIED ON THE CONTRACT PLANS (DIM. K AND DIM. J).

2. POLE:
   A. EACH TYPE D POLE SHALL BE COMPLETE WITH THE NECESSARY ACCESSORIES AND HARDWARE REQUIRED TO MAKE A COMPLETE INSTALLATION.
   B. POLE DIMENSIONS ARE NOTED ON THE CONTRACT PLANS.
   △1 C. WOOD SIGNAL POLES SHALL MEET THE REQUIREMENTS OF SECTION 715.42.9.3 OF THE STANDARD SPECIFICATIONS.
   D. EMBEDMENT DEPTH TO BE 20% OF THE POLE LENGTH.

3. GUY WIRE: UNLESS OTHERWISE SPECIFIED ON THE CONTRACT PLANS, ALL GUY WIRE SHALL BE THE STRAIGHT DIAGONAL TYPE.

4. GUY ANCHORS:
   A. GUY ANCHORS MAY BE EITHER THE EXPANDING TYPE, SCREW TYPE, PLATE TYPE, CONE TYPE OR ROCK TYPE ANCHORS.
   B. GUY ANCHORS SHALL BE GALVANIZED OR COATED WITH AN ASPHALT PAINT.
   C. GUY ANCHORS SHALL BE OF SUCH DIMENSIONS AND STRENGTH TO WITHSTAND A TENSILE LOAD OF 7,000 POUNDS AND AN A-2 (AASHTO SOIL CLASSIFICATION) TYPE SOIL.

5. EYEBOLT: EYEBOLT SHALL EXCEED TENSILE STRENGTH OF MESSENGER CABLE.

6. CONDUIT:
   A. CONDUIT FOR THE POWER SUPPLY SHALL BE FASTENED TO THE POLE WITH CONDUIT CLAMPS 4 FEET ON CENTER.
   B. CONDUIT CLAMPS SHALL BE FASTENED TO THE TYPE D WOOD POLE WITH WOOD SCREWS.

7. INSULATORS:
   A. INSULATORS SHALL BE INSTALLED WHEN SECONDARY POWER IS CARRIED PAST THE SIGNAL POLE INSTALLATION.
   B. SINGLE INSULATORS SHALL BE USED TO CARRY INTERCONNECT WIRE PAST THE INSTALLATION.
   C. INSULATORS MAY BE MOUNTED ON EITHER SIDE OF THE POLE.

8. SEE TES-20 AND TES-80 FOR NOTES REGARDING MESSENGER CABLE.

9. GROUNDING: SEE TES-40 FOR NOTES.

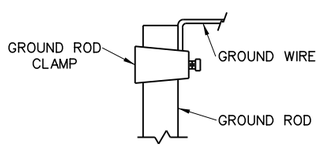

GROUND ROD CONNECTOR

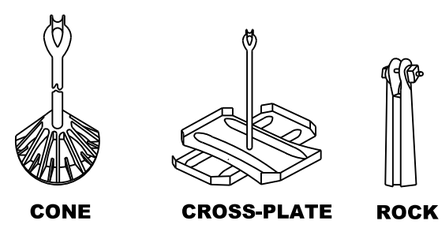

CONE **CROSS-PLATE** **ROCK**

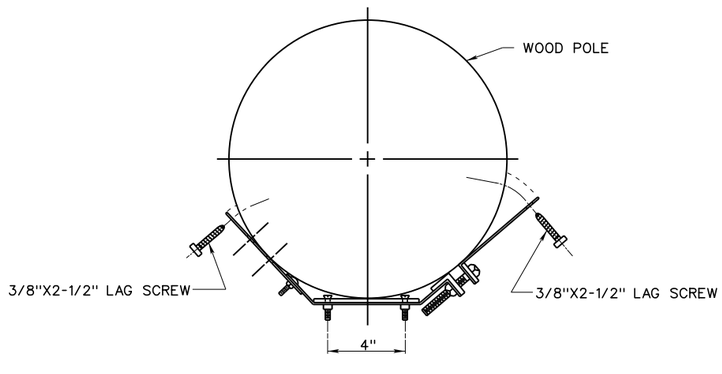

MOUNTING BRACKET FOR CABINETS

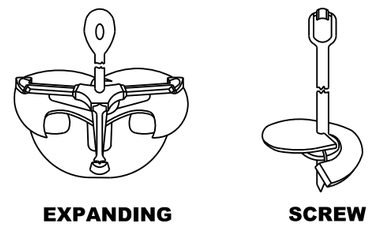

EXPANDING **SCREW**

GUY ANCHORS

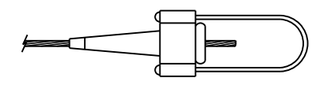

CABLE STRANDVISE

EYE BOLT WITH CURVED WASHERS AND NUTS FOR WOOD POLES

WEST VIRGINIA DEPARTMENT OF TRANSPORTATION
DIVISION OF HIGHWAYS
STANDARD DETAIL

PREPARED: 8/2018

REVISION DATE
△1 7/21/2023

WOOD POLE
TYPE D

△1 REVISED SPECIFICATION SECTION REFERENCE

STANDARD SHEET TES-23

TRAFFIC ENGINEERING DIVISION

J04C02C03-STDBOR c
8/17/2023
Z:\Projects\WVDOT\Standard Details vol I\Final Submittal\Revised DGNs\Revised 8-2023\TES-23 Rev 7-21-2023.dgn

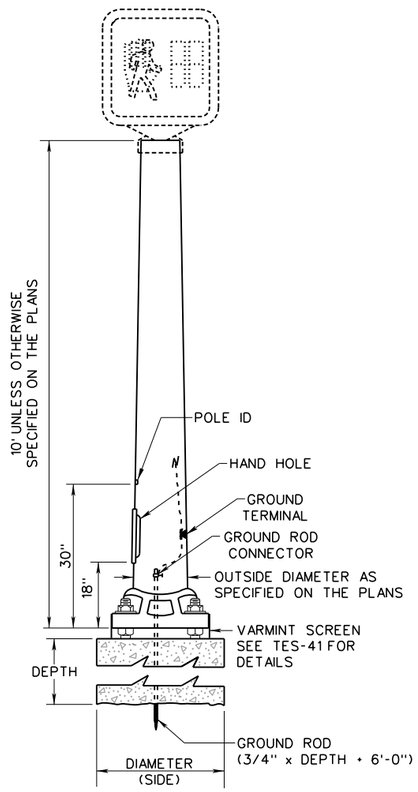

TYPE E1
ALUMINUM
TAPERED SHAFT

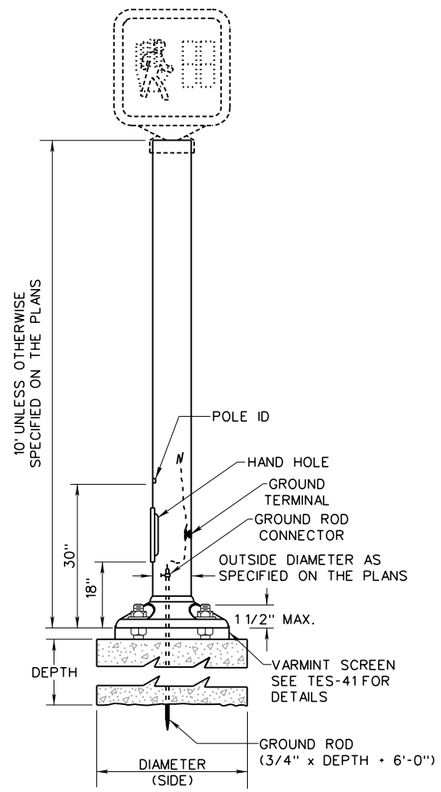

TYPE E2 or E3
STEEL
STRAIGHT SHAFT

PEDESTAL POLES

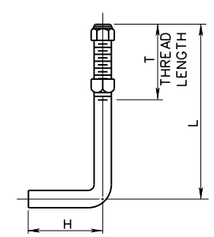

ANCHOR BOLTS

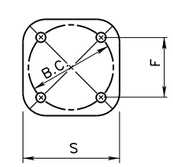

F, S & B.C. DIMENSIONS SHALL BE FURNISHED BY POLE MANUFACTURER

PEDESTAL BASE

GENERAL NOTES

1. PEDESTRIAN SIGNAL HEADS: HEIGHT OF THE INDICATIONS SHALL BE AS NOTED ON THE CONTRACT PLANS.

2. POLE:
   A. THE WELDED CONNECTION SHALL BE DESIGNED FOR THE LOAD ON THE SHAFT BUT NOT LESS THAN 75% OF THE STRENGTH OF THE SHAFT. MINIMUM FILLET WELD SHALL BE 3/16 INCH.
   B. POLE HEIGHT AND OUTSIDE DIAMETER SHALL BE NOTED ON THE CONTRACT PLANS.
   C. CONDUIT SHALL EXTEND 4" VERTICALLY UP IN THE POLE ABOVE THE FOUNDATION.
   D. POLE SHALL INCLUDE POLE ID. SEE SHEET TES-41.

3. HAND HOLE:
   A. ALL PEDESTAL POLES SHALL HAVE A MINIMUM SIZE HAND HOLE OF 3 IN x 5 IN.
   B. EACH COVER SHALL BE ATTACHED TO THE POLE BY STAINLESS STEEL SCREWS.

4. MOUNTING: BANDING OF SIGNAL HEAD BRACKETS TO POLES IS NOT PERMITTED UNLESS OTHERWISE SPECIFIED ON THE PLANS.

5. CONCRETE:
   A. ALL EXPOSED CONCRETE SHALL HAVE A NORMAL FINISH.
   B. ALL OUTSIDE CONCRETE CORNERS AND EDGES SHALL HAVE A 3/4 IN. CHAMFER.
   C. CONCRETE TO BE RODDED OR VIBRATED WHILE POURING.
   D. ALL CONCRETE SHALL BE CLASS B.

6. FOOTINGS:
   A. ALL FOOTING IN SIDEWALKS SHALL BE FINISHED FLUSH WITH EXISTING SIDEWALKS, UNLESS OTHERWISE SPECIFIED BY THE PROJECT ENGINEER.
   B. FOOTINGS MAY BE EITHER CIRCULAR OR SQUARE IN CROSS-SECTION. CIRCULAR FOOTINGS SHALL BE SQUARE FOR TOP 12 IN.

7. FORMS: NO FORMS MAY EXTEND TO A DEPTH GREATER THAN 12 IN. UNLESS APPROVAL IS GRANTED BY THE PROJECT ENGINEER.

8. POLE BASE: ANCHOR BOLT NUTS SHALL NOT BE COVERED.

9. GROUNDING: SEE TES-40 FOR NOTES.

POLE DESIGN NUMBER TO BE AS FOLLOWS:

POLE TYPE - POLE DESIGNATION - POLE HEIGHT

POLE TYPE = E
POLE DESIGNATION = 1, 2 OR 3
POLE HEIGHT = TOTAL HEIGHT IN FEET

EXAMPLE DESIGN NUMBER: E-1-10

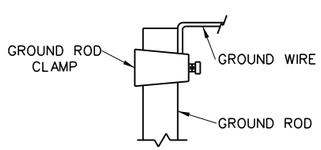

GROUND ROD CONNECTOR

POLE TYPE	ANCHOR BOLTS				CONCRETE FOOTING			
	MINIMUM DIMENSIONS				MINIMUM DIMENSIONS			
	BOLT SIZE	L	H	T	DIAM. (SIDE)	DEPTH	VOLUME (C.Y.)	REIN.
E1	1"x30"	26"	4"	4"	1'-6"	4'-0"	0.333	—
E2	1"x30"	26"	4"	4"	1'-6"	4'-0"	0.333	—
E3	1"x20"	17"	3"	4"	1'-6"	4'-0"	0.333	—

ANCHOR BOLTS TO BE FULLY GALVANIZED.

FOUNDATIONS

WEST VIRGINIA DEPARTMENT OF TRANSPORTATION
DIVISION OF HIGHWAYS
STANDARD DETAIL

PREPARED: 8/2018
REVISION DATE

PEDESTAL POLES
TYPE E1, E2 AND E3

STANDARD SHEET TES-30

TRAFFIC ENGINEERING DIVISION

12/19/2018

Z:\Projects\WVDOT\Standard Details vol II\New_Sheets\Signals\TES-30.dgn

J04C02C03-STDBOR c

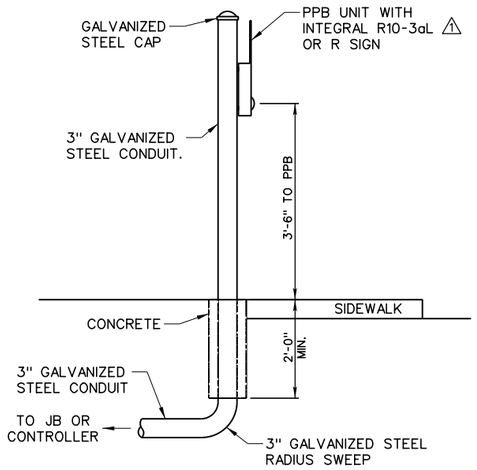

3" CONDUIT POST WITH PPB

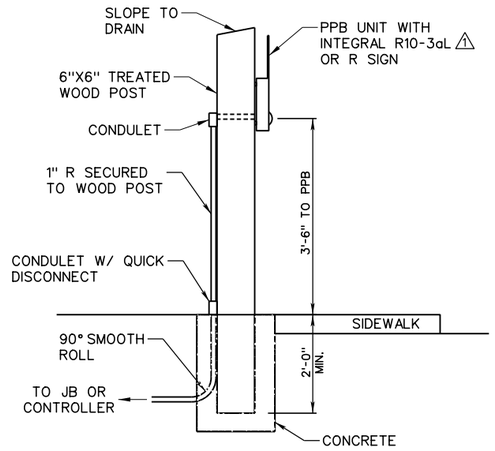

6"X6" WOOD POST WITH PPB

PPB INSTALLATION ON WOOD OR METAL STUB POST

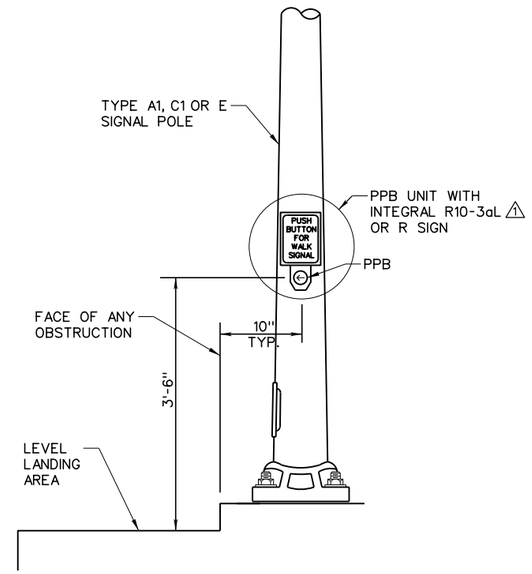

PPB INSTALLATION ON TYPE A1, C1 OR E POLE

GENERAL NOTES

1. LOCATION:
   A. THE PUSH BUTTON MUST BE WITHIN ACCESSIBLE REACH RANGE OF A LEVEL LANDING FOR USE FROM A WHEELCHAIR. THE BUTTON MAY BE PLACED UP TO 10 INCHES FROM THE LEVEL LANDING AREA.
   B. THE OPTIMAL LOCATION FOR THE PUSH BUTTON IS BETWEEN THE CURB RAMP AND THE EDGE OF THE CROSSWALK LINE (EXTENDED) FARTHER FROM THE CORNER. IF THE OPTIMAL LOCATION IS NOT POSSIBLE, THE PUSH BUTTON NEEDS TO BE LESS THAN 5 FEET FROM THE EDGE OF THE CROSSWALK LINE (EXTENDED) FARTHER FROM THE CORNER.
   C. THE PUSH BUTTON SHOULD BE BETWEEN 1.5 FEET AND 6 FEET, BUT NO FURTHER THAN 10 FEET FROM THE EDGE OF THE CURB, SHOULDER, OR PAVEMENT UNLESS OTHERWISE SHOWN IN THE CONTRACT PLANS.

2. PUSH BUTTON UNIT:
   A. THE PUSH BUTTON SHALL BE MOUNTED AT A HEIGHT OF 3 FT-6 IN ABOVE THE SURFACE OF THE SIDEWALK UNLESS OTHERWISE SPECIFIED ON THE CONTRACT PLANS.
   B. TACTILE ARROWS ON PEDESTRIAN PUSH BUTTONS SHALL BE ORIENTED PARALLEL TO THE DIRECTION OF TRAVEL ON THE CROSSWALK CONTROLLED BY THE PUSH BUTTON.
   C. PUSH BUTTON SHALL BE MOUNTED AS PER MANUFACTURER'S RECOMMENDATIONS.
   D. AUDIBLE PEDESTRIAN PUSH BUTTONS SHALL INCORPORATE A PUSH BUTTON WITH VIBRATOR, AUDIBLE MESSAGE AND TACTILE RELIEF SYMBOLS.
   E. THE PPB UNIT SHALL BE A COMBINATION PUSHBUTTON/SIGN COMBINATION AND A MODEL LISTED IN THE APL.

3. SIGN:
   A. THE SIGN SHALL CONFORM TO THE SIGN DESIGNATED AS R10-3aL OR R AS SHOWN IN THE WEST VIRGINIA SIGN FABRICATION DETAILS MANUAL.
   B. THE SIGN SHALL BE MOUNTED IMMEDIATELY ABOVE THE PUSH BUTTON AND BE AN INTEGRAL PART OF THE PPB UNIT.
   C. SIGNS SHALL BE 0.080 IN. FLAT SHEET ALUMINUM AND FABRICATED ACCORDING TO WVDOH STANDARDS FOR SHEETING AND DESIGN UNLESS OTHERWISE SPECIFIED ON THE CONTRACT PLANS.

4. STUB POST SUPPORT:
   A. USE STUB POST TYPE SUPPORT WHEN A TYPE A1, C1 OR E POLE IS NOT WITHIN REACH RANGE OF AN ACCESSIBLE LEVEL LANDING AREA.
   B. STUB POST HEIGHT TO BE BASED ON MINIMUM REQUIRED CLEARANCE TO PPB.
   C. MOUNT PPB AS PER MANUFACTURER'S RECOMMENDATIONS.

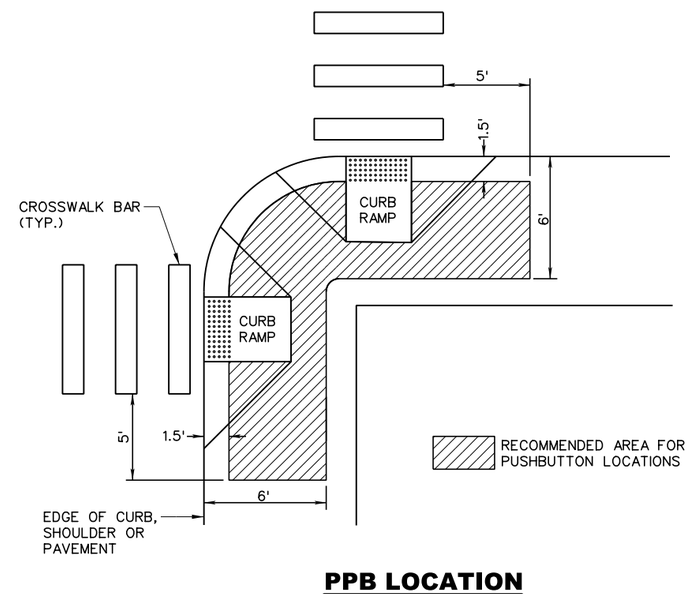

PPB LOCATION

SEE NOTE 1

⚠1 REVISED SIGN NUMBER

WEST VIRGINIA DEPARTMENT OF TRANSPORTATION
DIVISION OF HIGHWAYS
STANDARD DETAIL

PREPARED: 8/2018

REVISION DATE
⚠1 3/2020

PEDESTRIAN PUSH BUTTONS (PPB)

STANDARD SHEET TES-31

TRAFFIC ENGINEERING DIVISION

J04C02C03-STDBDR c
8/17/2023
Z:\Projects\WVDOT\Standard Details vol II\Final Submittal\Revised DGNs\Revised 4-2022\TES-31 Rev. 3-2020.dgn

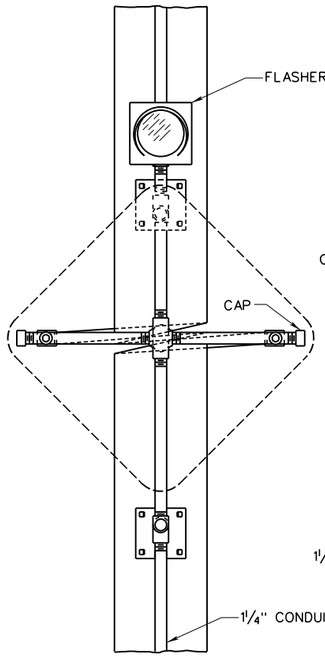

FRONT VIEW

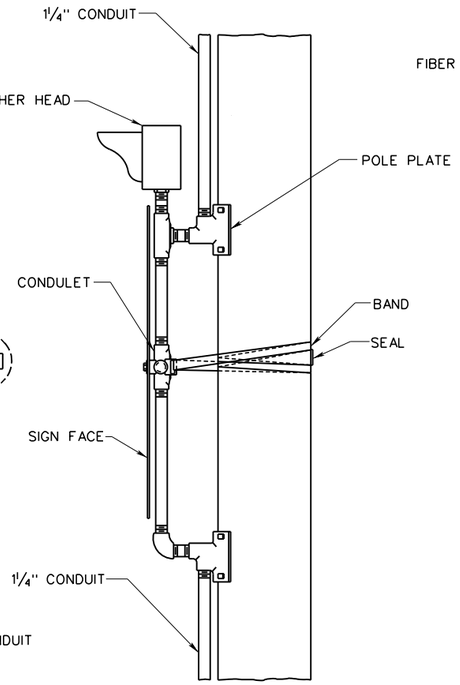

SIDE VIEW

FLASHER AND SIGN MOUNTING DETAIL
POLE MOUNT

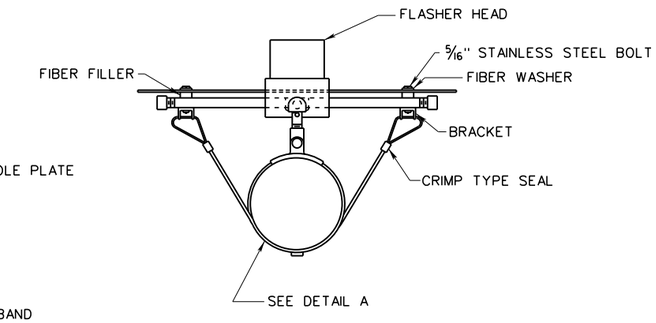

TOP VIEW

EACH SIDE OF BRACE BANDING MAKES ONE COMPLETE LOOP AROUND POLE SEAL ON BACK OF POLE

DETAIL A

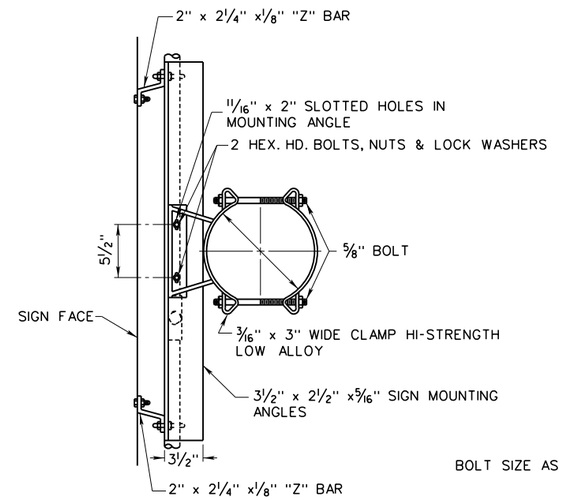

SECTION A-A

BOLT SIZE AS REQUIRED

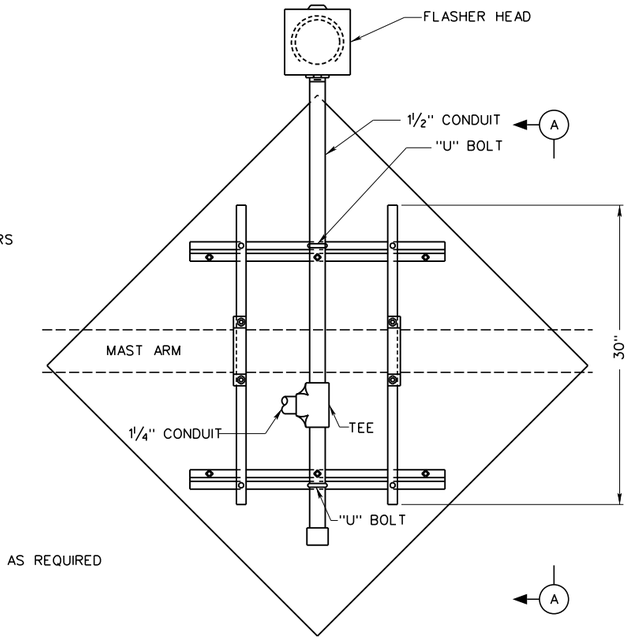

FLASHER AND SIGN MOUNTING DETAIL
MAST ARM MOUNT

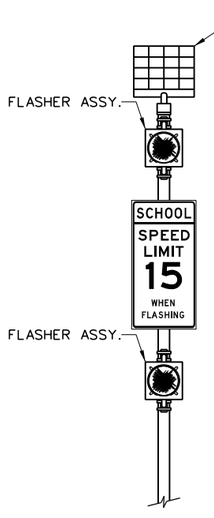

FRONT VIEW

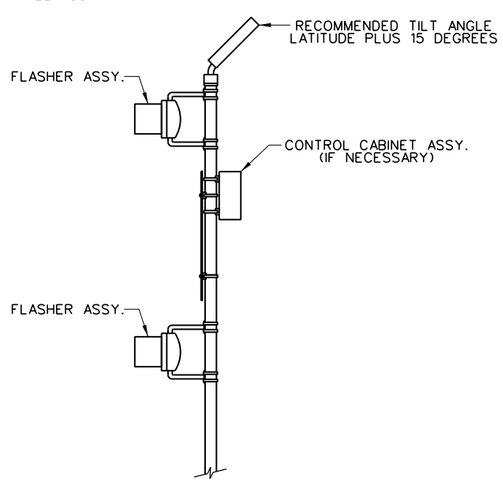

SIDE VIEW

SOLAR SCHOOL SIGN ASSEMBLY DETAILS

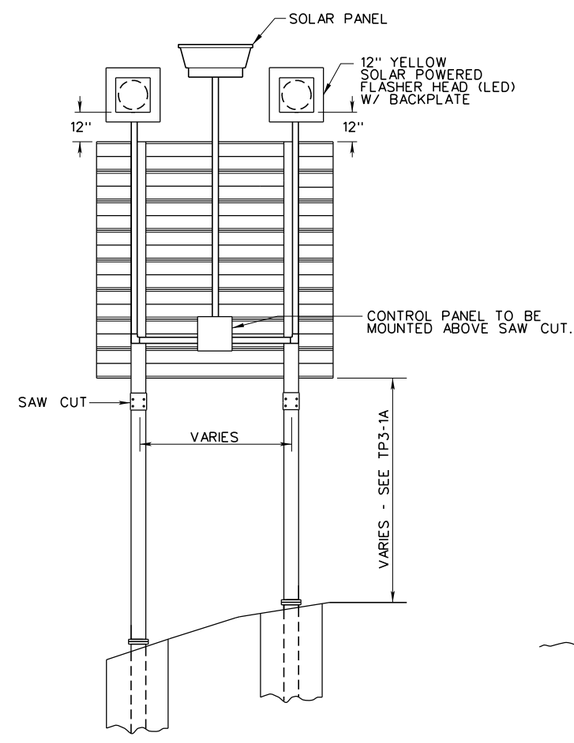

BACK VIEW

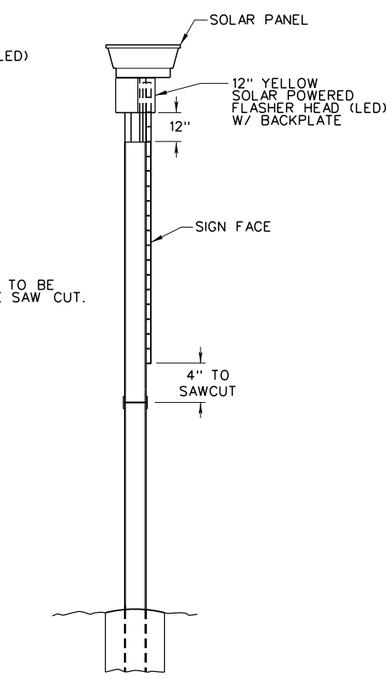

SIDE VIEW

SOLAR POWERED SIGN FLASHERS

GENERAL NOTES:

1. TRAFFIC SIGN AND SIGNAL HEAD SIZE (8 IN. MIN.) WILL BE AS SHOWN ON CONTRACT PLANS.
2. ALL LENS VISORS SHALL BE OF THE "CUT-AWAY" TYPE UNLESS OTHERWISE SPECIFIED.
3. ALL CONDUIT SHALL BE 1½ IN. DIAMETER UNLESS OTHERWISE NOTED.
4. BOLT AND NUT ASSEMBLIES MAY BE STAINLESS STEEL OR CADMIUM PLATED.
5. BOTTOM OF SIGN NOT MOUNTED OVERHEAD SHALL BE 8 FT. MIN. TO 10 FT. MAX. SIGNS MOUNTED OVERHEAD SHALL BE 17 FT-0 IN ABOVE THE ROADWAY.
6. CONDUIT SHALL NOT CROSS SAW CUT.

WEST VIRGINIA DEPARTMENT OF TRANSPORTATION
DIVISION OF HIGHWAYS
STANDARD DETAIL

PREPARED: 8/2018
REVISION DATE

FLASHER AND SIGN INSTALLATION

STANDARD SHEET TES-35

TRAFFIC ENGINEERING DIVISION

12/19/2018

Z:\Projects\WVDOT\Standard Details vol II\New_Sheets\Signals\TES-35.dgn

J04C02C03-STDBOR c

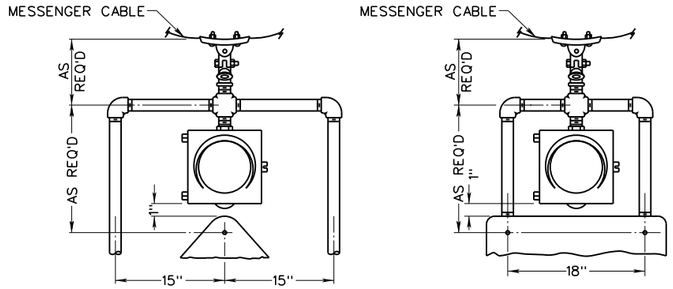

SUSPENSION METHOD "A" - SINGLE HANGER UNITS

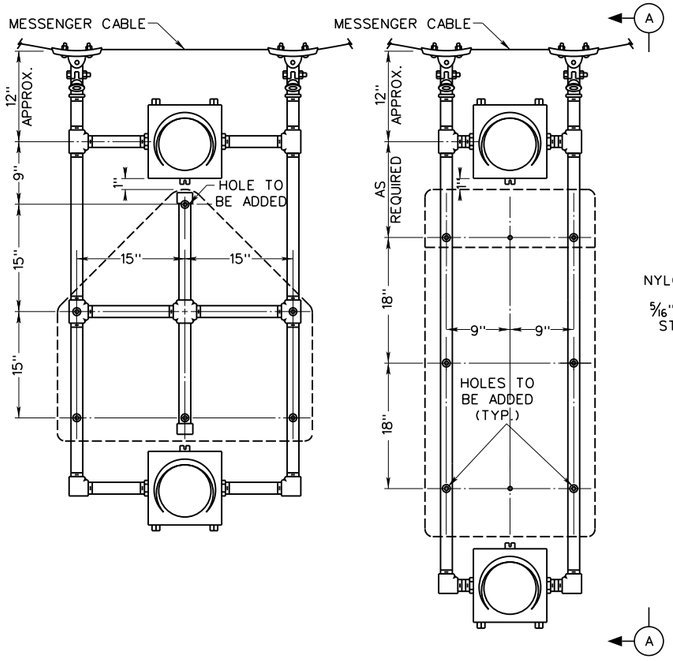

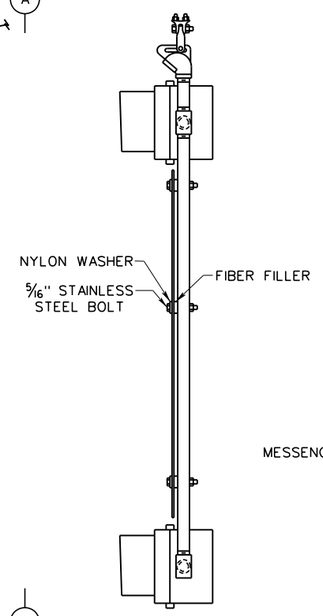

SECTION A-A

SUSPENSION METHOD "B" - DOUBLE HANGER UNITS

SPAN WIRE MOUNTING DETAILS

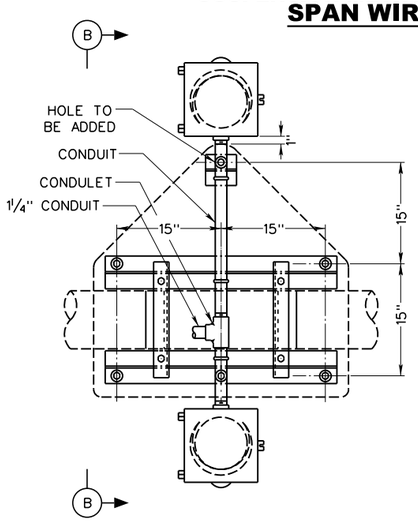

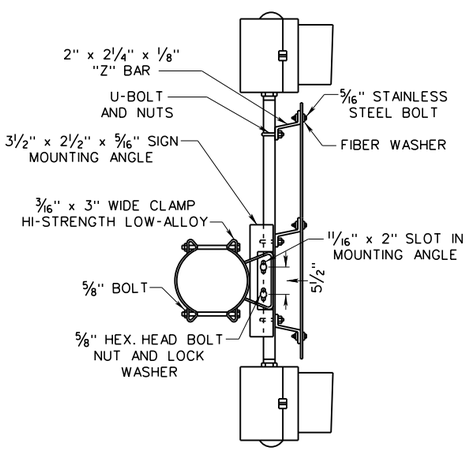

SECTION B-B

MAST ARM MOUNTING DETAIL

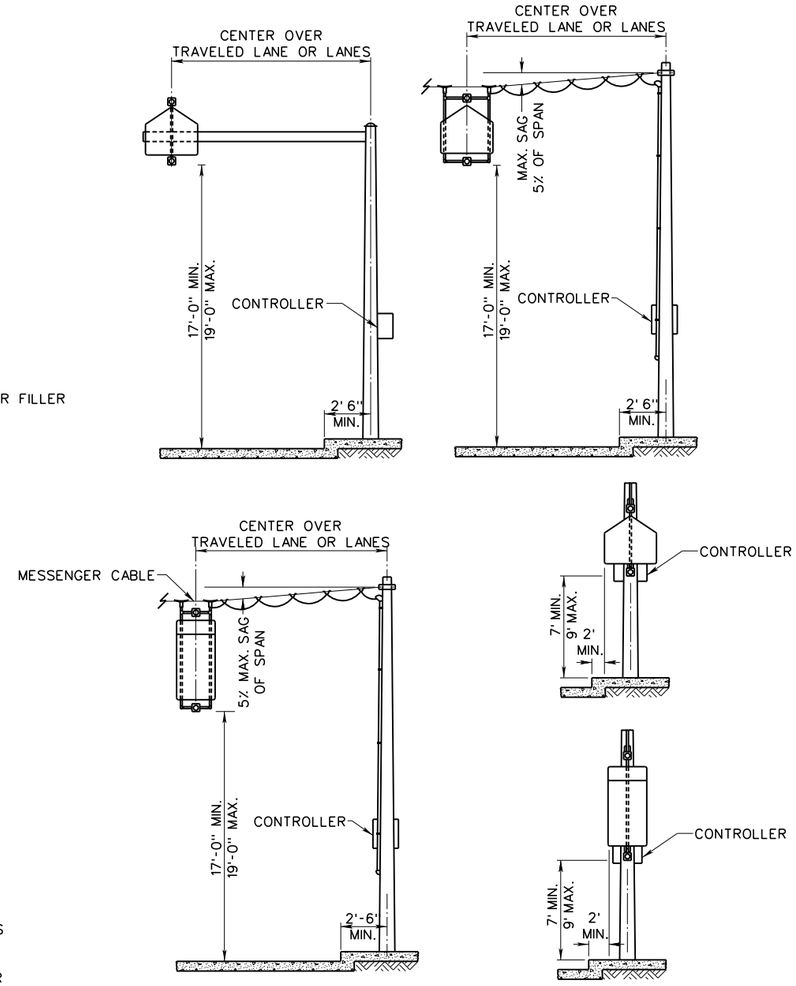

SIGN LOCATION DETAILS

HORIZONTAL MINIMUM CLEARANCE (2' AND 2'-6") AS SHOWN ARE FOR CURB AREAS.
FOR RURAL AREAS IT SHALL BE 4' MIN. BEHIND SHOULDER EDGE AND 2' MIN. BEHIND FACE OF GUARDRAIL.

GENERAL NOTES

1. ALL BEACON LENS SHALL BE 12 INCH YELLOW LIGHT EMITTING DIODE (LED).
2. ALL LENS VISORS SHALL BE OF THE "CUT-AWAY" TYPE UNLESS OTHERWISE SPECIFIED.
3. ALL CONDUIT SHALL BE 1½ IN. DIAMETER UNLESS OTHERWISE NOTED.
4. SIGNS SHALL BE STANDARD 36 IN. x 36 IN. "SCHOOL CROSSING" (S1-1) SIGN OR 24 IN. x 48 IN. "SCHOOL SPEED LIMIT WHEN FLASHING" (S5-1) SIGN ONLY.
5. MOUNTING DIMENSIONS SHOWN ARE FOR STANDARD 12 IN. SIGNAL HEADS ONLY.
6. ALL MESSENGER CABLES SHALL BE A MINIMUM OF ⅜ IN.
7. BOLT AND NUT ASSEMBLIES MAY BE STAINLESS STEEL OR CADMIUM PLATED.

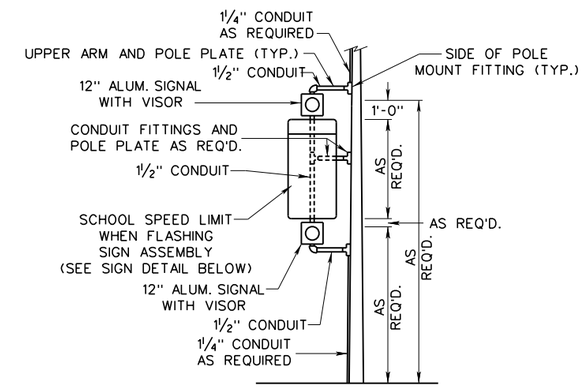

POLE MOUNTING DETAIL

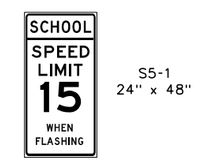

S5-1
24" x 48"

SIGN DETAIL

WEST VIRGINIA DEPARTMENT OF TRANSPORTATION
DIVISION OF HIGHWAYS
STANDARD DETAIL

PREPARED: 8/2018
REVISION DATE

INSTALLATION DETAILS FOR SCHOOL SIGNS WITH FLASHERS

STANDARD SHEET TES-36

TRAFFIC ENGINEERING DIVISION

12/19/2018

Z:\Projects\WVDOT\Standard Details vol II\New_Sheets\Signals\TES-36.dgn

J04C02C03-STDBOR c

ANCHOR BOLT CHART

MINIMUM DIMENSIONS				
BOLT SIZE	PARENT METAL	L	H	T
1" X 40"	1.000	36"	4"	6"
1 1/4" X 48"	1.250	42"	6"	6" TO 8"
1 1/2" X 60"	1.500	54"	6"	8" TO 9"
1 3/4" X 90"	1.750	84"	6"	8" TO 9"
2" X 90"	2.000	90"	2¼"x7¾"x7¾" PLATES	9"
2 1/4" X 96"	2.250	96"	2½"x9"x9" PLATES	10"

EACH ANCHOR BOLT SHALL INCLUDE TWO HEX NUTS AND TWO FLAT WASHERS AND SHALL BE FULLY GALVANIZED.

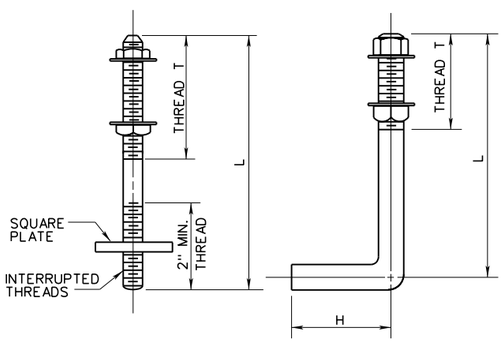

ANCHOR BOLT DETAIL

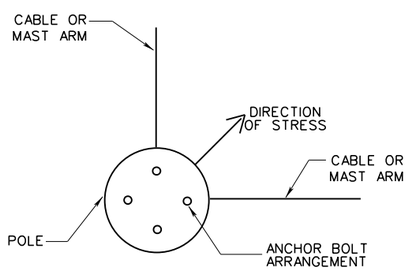

DIRECTION OF STRESS

FOR SIGNAL POLES WITH 4 ANCHOR BOLTS w/ TWO CABLES or MAST ARMS ATTACHED
N/A TO 6 BOLT CONFIGURATION

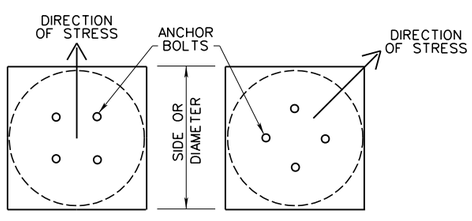

TOP VIEW OF FOOTER

POLE FOUNDATION CHART

POLE SIZE			ANCHOR BOLT			CONCRETE FOUNDATION				REINFORCING	
POLE DESIG-NATION	POLE DIAM. (IN.)	WALL THICKNESS (GAUGE OR IN.)	BOLT CIRCLE DIAMETER B.C. (IN.)	ANCHOR BOLT SIZE	NO. OF ANCHOR BOLTS	DIAMETER OR SIDE (FT.)	*DEPTH (FT.)	VOLUME (C.Y.)		NO. OF BARS	SIZE OF BARS
								CIRCULAR	REGULAR		
MAST ARM											
A	10	7	13.5	1 1/2" x 60"	4	3.5	7	2.59	3.18	9	11
B	12	3	16	1 3/4" x 90"	4	3.5	8	2.95	3.63	9	11
C	16	3	23.5	2" x 90"	4	4	9	4.32	5.33	12	11
D	20	3	27	1 3/4" x 90"	6	4.5	8	4.87	6.00	15	11
E	21	0.5	28	1 3/4" x 90"	6	4.5	9	5.46	6.75	15	11
F	22	0.626	29.59	2" x 90"	6	5	10	7.47	9.26	19	11
G	12	7	16	1 1/2" x 60"	4	SEE NOTE 7					
STRAIN POLE											
R	14.75	3	22	2" x 90"	4	3.5	11	4.02	4.99	18	8
S	15.5	3	22	2" x 90"	4	3.5	11	4.02	4.99	18	8

*DEPTH OF FOUNDATION IS BASED ON AN ASSUMED SOIL SUCH AS MEDIUM CLAY OR SAND CLAY PROVIDING AN UNCONFINED COMPRESSIVE STRENGTH NOT LESS THAN 2500 LBS/FT2. THESE FOUNDATIONS MAY BE USED IN COHESIONLESS TYPE SOILS PROVIDING THAT THE FRICTION ANGLE IS NOT LESS THAN 30 DEGREE. A GEOTECHNICAL ENGINEER MAY BE CONSULTED AND THE DEPTH MAY BE CHANGED TO ADAPT TO LOCAL SOIL CONDITIONS.

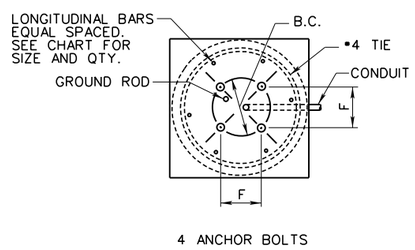

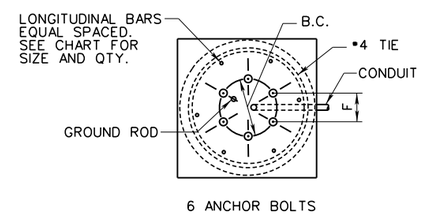

PLAN VIEW

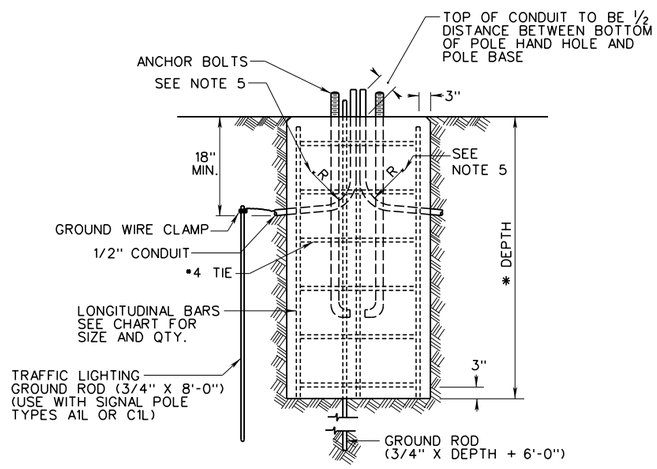

SECTION

FOUNDATION DETAILS

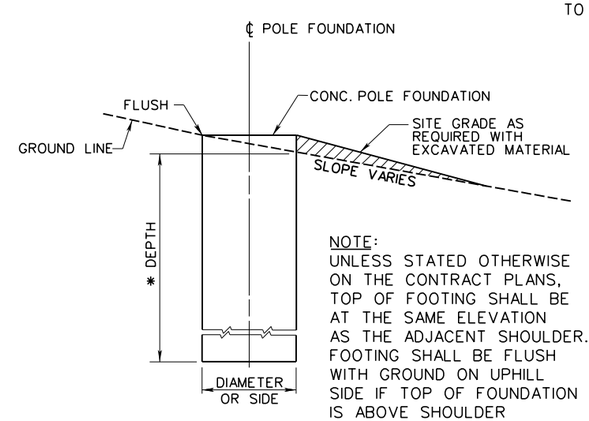

NOTE:
UNLESS STATED OTHERWISE ON THE CONTRACT PLANS, TOP OF FOOTING SHALL BE AT THE SAME ELEVATION AS THE ADJACENT SHOULDER. FOOTING SHALL BE FLUSH WITH GROUND ON UPHILL SIDE IF TOP OF FOUNDATION IS ABOVE SHOULDER ELEVATION.

FOUNDATION IN SLOPE

GENERAL NOTES

1. CONCRETE:
   - A. ALL EXPOSED CONCRETE SHALL HAVE A NORMAL FINISH.
   - B. ALL OUTSIDE CONCRETE CORNERS AND EDGES SHALL HAVE A ¾ IN. CHAMFER.
   - C. CONCRETE TO BE RODDED OR VIBRATED WHILE POURING.
   - D. ALL CONCRETE SHALL BE CLASS B.
2. STEEL:
   - A. REINFORCING STEEL SHALL NOT BE CLOSER THAN 3 IN. TO THE OUTSIDE SURFACE OF THE FOOTING AND SHALL BE TIED OR WELDED.
   - B. VERTICAL BARS SHALL BE TIED WITH •4 HOOP BARS 1 FT-0 IN ON CENTER. THE •4 HOOP BARS SHALL HAVE A 1 FT-0 IN MINIMUM LAP.
3. FOOTINGS:
   - A. ALL FOOTING IN SIDEWALKS SHALL BE FINISHED FLUSH WITH THE EXISTING SIDEWALKS, UNLESS OTHERWISE SPECIFIED BY THE PROJECT ENGINEER.
   - B. FOOTINGS MAY BE EITHER CIRCULAR OR SQUARE IN CROSS-SECTION. CIRCULAR FOOTINGS SHALL BE SQUARE FOR THE TOP 12 IN.
   - C. BOLT CIRCLE (B.C.) SHALL BE CENTERED IN FOUNDATION.
4. FORMS: NO FORMS MAY EXTEND TO A DEPTH GREATER THAN 12 IN. UNLESS APPROVAL IS GRANTED BY THE PROJECT ENGINEER.
5. CONDUIT: THE RADIUS (R) OF THE CURVE OF THE INNER EDGE OF ANY BEND SHALL NOT BE LESS THAN THE SIZE SPECIFIED IN THE N.E.C.
6. GROUNDING:
   - A. THE CONTRACTOR IS TO ENGAGE A QUALIFIED TESTING AND INSPECTION AGENCY TO PERFORM FIELD TESTS AND INSPECTIONS.
   - B. AFTER INSTALLING GROUNDING SYSTEM BUT BEFORE PERMANENT ELECTRICAL CIRCUITS HAVE BEEN ENERGIZED, TEST FOR COMPLIANCE WITH THE FOLLOWING REQUIREMENTS:
     - I. TEST COMPLETED GROUNDING SYSTEM AT EACH POLE AND AT SERVICE DISCONNECT ENCLOSURE.
     - II. MEASURE GROUND RESISTANCE NOT LESS THAN TWO FULL DAYS AFTER THE LAST TRACE OF PRECIPITATION AND WITHOUT SOIL BEING MOISTENED BY ANY MEANS OTHER THAN NATURAL DRAINAGE OR SEEPAGE AND WITHOUT CHEMICAL TREATMENT OR OTHER ARTIFICIAL MEANS OF REDUCING NATURAL GROUND RESISTANCE.
     - III. PERFORM THE TEST BY THE FALL-OF-POTENTIAL METHOD ACCORDING TO IEEE STANDARD 81.
   - C. INSTALL ADDITIONAL GROUND RODS AS REQUIRED UNTIL MEASURED GROUND RESISTANCE IS 5 OHMS OR LESS.
   - D. GROUND RODS ARE TO BE DRIVEN TO A DEPTH OF 2 INCHES BELOW FINISHED GRADE TO TOP OF ROD AND SEPARATED BY A MINIMUM DISTANCE OF 8 FEET.
   - E. INTERCONNECT GROUND RODS WITH A •2 AWG BARE, STRANDED COPPER CONDUCTOR BURIED AT 18 INCHES BELOW GRADE.
7. POLE DESIGNATION G IS FOR USE ON EXISTING FOUNDATIONS AND ONLY TO BE USED AT THE DIRECTION OF TRAFFIC ENGINEERING DIVISION.

DEFINITIONS:
7 GA. = 0.179 INCHES
3 GA. = 0.25 INCHES
0 GA. = 0.313 INCHES

WEST VIRGINIA DEPARTMENT OF TRANSPORTATION
DIVISION OF HIGHWAYS
STANDARD DETAIL

PREPARED: 8/2018
REVISION DATE

STEEL SIGNAL POLE FOUNDATIONS

STANDARD SHEET TES-40

TRAFFIC ENGINEERING DIVISION

12/19/2018

Z:\Projects\WV001\Standard Details vol II\New_Sheets\Signals\TES-40.dgn

J04C02C03-STDBDR c

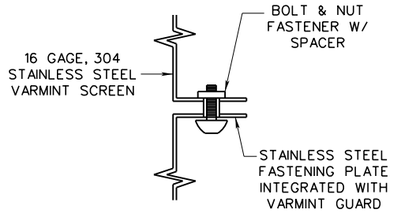

DETAIL A

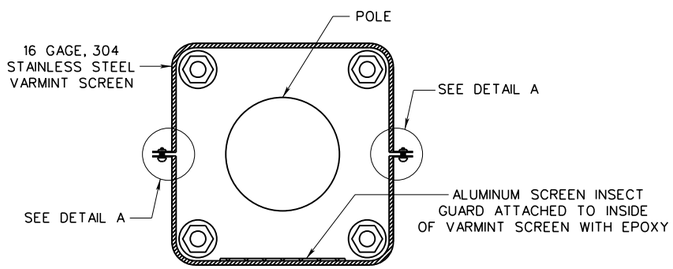

PLAN VIEW

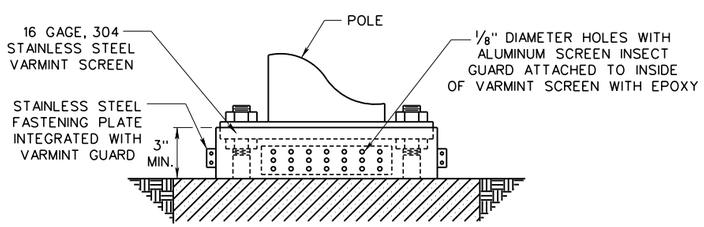

CONTRACTOR TO FURNISH
TEMPLATE FOR EACH FOOTER

VARMINT SCREEN (TYP.)

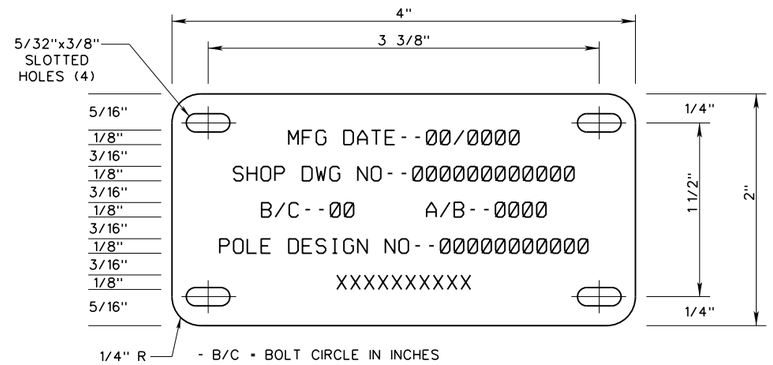

- B/C = BOLT CIRCLE IN INCHES
- A/B = ANCHOR BOLT DIAMETER IN INCHES
- SEE TES-11, TES-20 & TES-30 FOR POLE DESIGN NO NOMENCLATURE
- XXXXXXXXXX--MANUFACTURER NAME TO BE INSERTED HERE.
- DRILL (4) #29 (ø.136") ON 1 1/2"x3 3/8" CENTERS ON POLE AT 0°, 30" ABOVE BASE PLATE. 2"x4" ALUM. I.D. TAG TO BE ATTACHED WITH (4) S.S. DRIVE SCREWS.
- TO BE INSTALLED AT MANUFACTURERS PLANT.

POLE I.D.

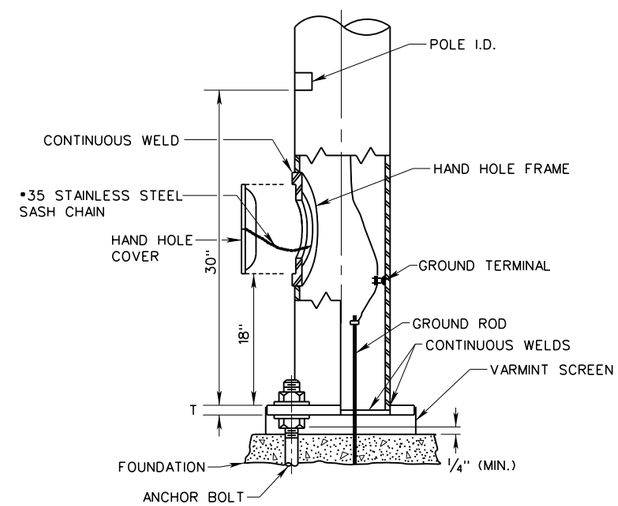

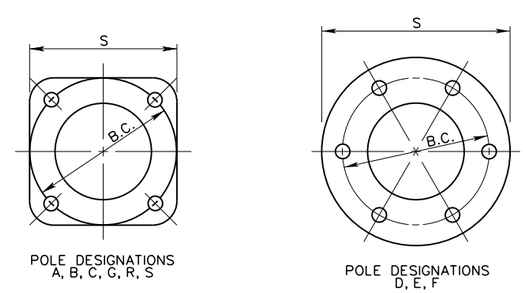

POLE DESIGNATIONS
A, B, C, G, R, S

POLE DESIGNATIONS
D, E, F

PLAN VIEW

POLE BASE

DIMENSION S SHALL BE
FURNISHED BY POLE
MANUFACTURER

GENERAL NOTES

1. POLE BASE:
   - A. HIGH STRENGTH BOLTS SHALL CONFORM TO THE REQUIREMENTS OF SECTION 709.24 OF THE SPECIFICATIONS.
   - B. TIGHTEN THE NUTS OF ALL HIGH STRENGTH BOLTS BY THE TURN OF THE NUT METHOD IN ACCORDANCE WITH SECTION 615 OF THE SPECIFICATIONS.
   - C. SEE SHEET TES-40 FOR ANCHOR BOLT DETAILS.
   - D. NO GROUT IS TO BE PLACED BETWEEN THE POLE BASE AND TOP OF FOUNDATION.
2. VARMINT SCREEN:
   - A. ALL TYPE A1, C1 AND E POLES SHALL INCLUDE A VARMINT SCREEN WHICH IS PROPERLY SIZED FOR THE POLE BASE FLANGE.
   - B. THE VARMINT SCREEN SUPPLIED WILL BE OF A SUFFICIENT HEIGHT SO THAT THE CONTRACTOR CAN CUSTOM FIT EACH VARMINT SCREEN TO REST UPON THE FOUNDATION WITHOUT ANY GAPS.
   - C. THERE SHALL NOT BE ANY GAP BETWEEN CONNECTIONS OF VARMINT SCREEN.
3. POLE I.D.:
   - A. ALL TYPE A1, C1 AND E POLES SHALL INCLUDE A POLE I.D. AS SHOWN IN THE DETAIL.
   - B POLE I.D. TO BE INSTALLED BY THE POLE MANUFACTURER.
4. GROUNDING: SEE TES-40 FOR NOTES.

WEST VIRGINIA DEPARTMENT OF TRANSPORTATION
DIVISION OF HIGHWAYS
STANDARD DETAIL

PREPARED: 8/2018
REVISION DATE

POLE BASE DETAILS

STANDARD SHEET TES-41

TRAFFIC ENGINEERING DIVISION

12/19/2018

Z:\Projects\WVDOT\Standard Details vol II\New_Sheets\Signals\TES-41.dgn

J04C02C03-STDBOR c

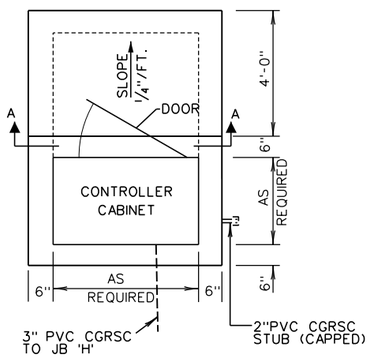

PLAN VIEW

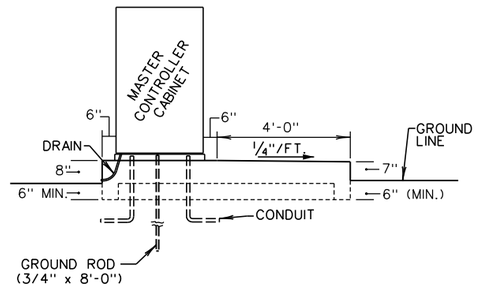

SIDE VIEW

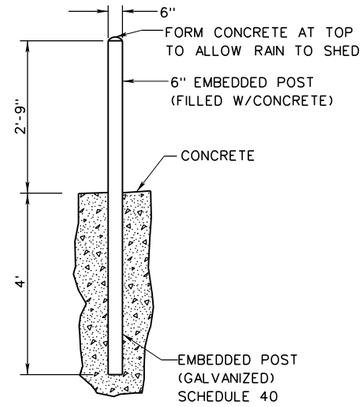

PROTECTIVE POST

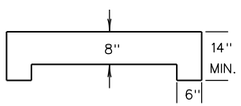

SECTION A-A

SIGNAL CONTROLLER CABINET BASE MOUNTED

GENERAL NOTES

1. CONCRETE:
   - A. ALL EXPOSED CONCRETE SHALL HAVE A NORMAL FINISH.
   - B. ALL OUTSIDE CONCRETE CORNERS AND EDGES SHALL HAVE A 3/4 IN. CHAMFER.
   - C. CONCRETE TO BE RODDED OR VIBRATED WHILE POURING.
   - D. ALL CONCRETE SHALL BE CLASS B.
2. CONDUIT:
   - A. THE RADIUS (R) OF THE CURVE OF THE INNER EDGE OF ANY BEND SHALL NOT BE LESS THAN THE SIZE SPECIFIED IN THE N.E.C.
3. EXTERNAL CONDUIT CONNECTIONS:
   - A. ALL RIGHT ANGLE CONDUIT BENDS SHALL BE MADE WITH TYPE LB CONDULETS.
   - B. ALL CONDUIT CARRYING CONDUCTOR CABLE SHALL BE A MINIMUM OF TWO INCHES OR AS REQUIRED.
   - C. POWER SERVICE SHALL BE CARRIED IN 1-1/4 IN. CONDUIT.
   - D. CONDULET SHALL BE CONSTRUCTED OF CAST STEEL ALLOY AND SHALL BE CADMIUM-GALVANIZED. THE CONDULETS SHALL BE WATER PROOFED BY USE OF A GASKET AND A CAST STEEL ALLOY COVER.
4. INTERNAL CONDUIT CONNECTIONS:
   - A. TYPE LB OR LBY CONDULETS AS SHOWN.
   - B. ALL CONDUIT CARRYING CONDUCTOR CABLE SHALL BE A MINIMUM OF TWO INCHES OR AS REQUIRED.
   - C. POWER SERVICE SHALL BE CARRIED IN 1-1/4 IN. CONDUIT.
   - D. CONDULET SHALL BE CONSTRUCTED OF CAST STEEL ALLOY AND SHALL BE CADMIUM-GALVANIZED. THE CONDULETS SHALL BE WATER PROOFED BY USE OF A GASKET AND A CAST STEEL ALLOY COVER.
   - E. THE HOLE MAY BE DRILLED 1/16 IN. DIAMETER LARGER THAN THE CONDUIT WHICH IS INSERTED IN THE HOLE. THEN THE CONNECTION SHALL BE DOUBLE-NUT SECURED ON BOTH SIDES WITH A BUSHING INSIDE, THE CONNECTION IS THEN SEALED WITH A RUBBER BASE SEALANT.
5. CONDUIT CONNECTION TO ALL CABINETS SHALL BE MADE THROUGH THE BASE OF THE CABINETS ONLY.
6. GROUNDING: SEE TES-40 FOR NOTES.

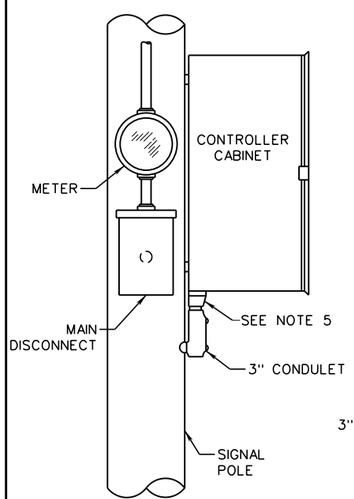

POWER SERVICE CONNECTION

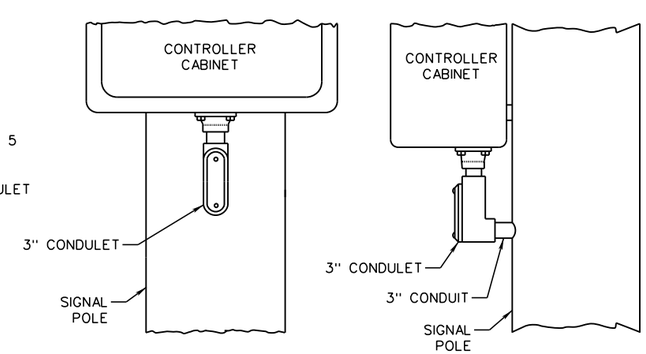

CONTROLLER OR DETECTOR SERVICE CONNECTION

INTERNAL CONDUIT CONNECTION

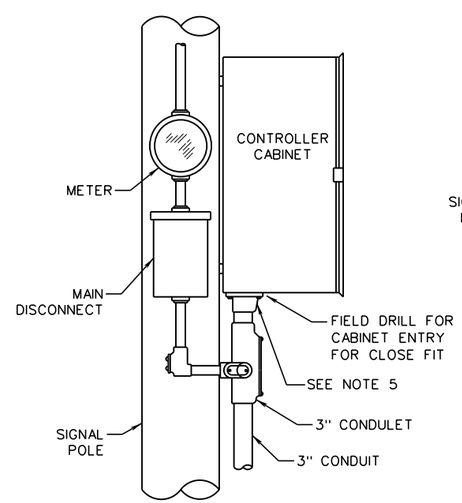

POWER SERVICE CONNECTION

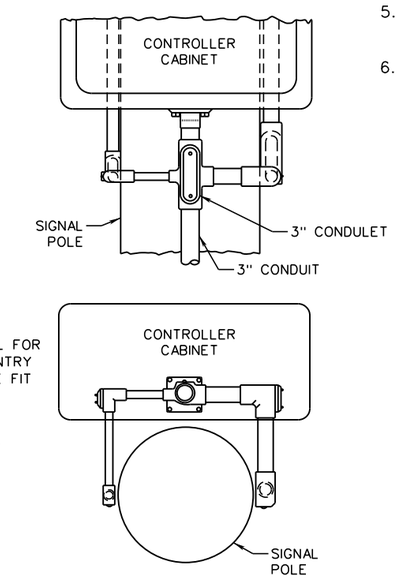

CONTROLLER OR DETECTOR SERVICE CONNECTION

EXTERNAL CONDUIT CONNECTION

SIGNAL CONTROLLER CABINET POLE MOUNTED

WEST VIRGINIA DEPARTMENT OF TRANSPORTATION
DIVISION OF HIGHWAYS
STANDARD DETAIL

PREPARED: 8/2018
REVISION DATE

SIGNAL CONTROLLER CABINETS

STANDARD SHEET TES-42

TRAFFIC ENGINEERING DIVISION

12/19/2018

Z:\Projects\WVDOT\Standard Details vol II\New_Sheets\Signals\TES-42.dgn

J04C02C03-STDBOR c

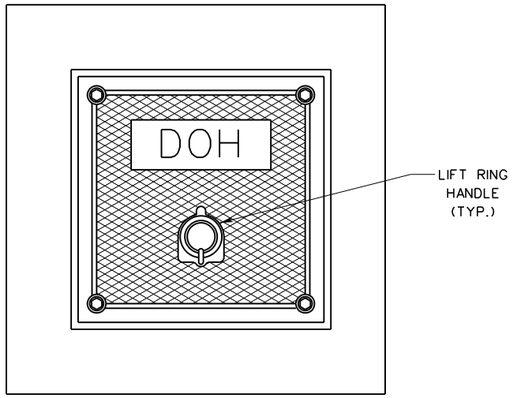

PLAN

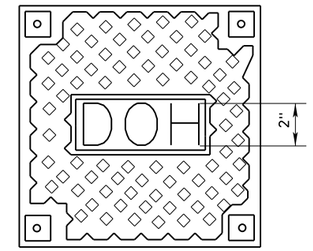

JUNCTION BOX COVER

CHECKERED, NON-SLIP SURFACE

(TYPE H)

PLAN

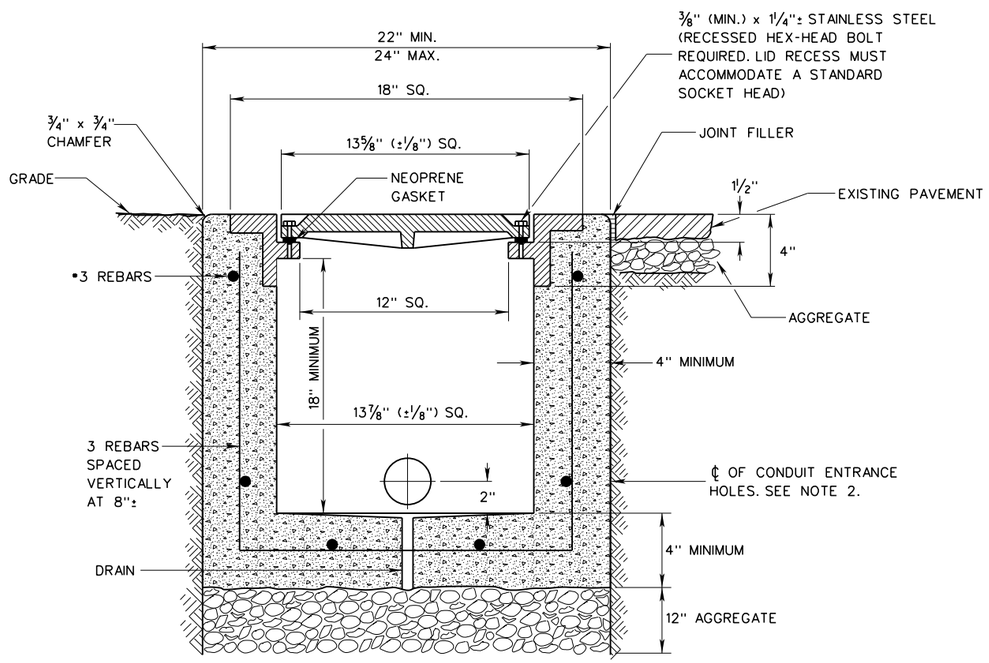

SECTION

GENERAL NOTES

1. AGGREGATE:
   - A. AGGREGATE TO BE COVERED WITH 3 PLY TAR PAPER OR OTHER APPROVED VAPOR BARRIER. DRAIN HOLE TO BE BROKE THROUGH AFTER COMPLETION.
   - B. AGGREGATE SHALL BE BY VISUAL INSPECTION AN EVENLY DISTRIBUTED MIXTURE OF PARTICLES BETWEEN ⅜ IN. AND ¾ IN DIAMETER.

2. FRAME AND COVER:
   - A. TYPE H JUNCTION BOX FRAMES AND COVERS SHALL BE GRAY IRON. GRAY IRON SHALL MEET THE REQUIREMENTS OF SECTIONS 709.10 AND 715.42.11.2 OF THE SPECIFICATIONS.
   - B. TYPE H JUNCTION BOX FRAMES AND COVERS SHALL HAVE TYPE H-20 LOADING CAPACITY.
   - C. TYPE H JUNCTION BOX FRAMES AND COVERS SHALL BE WATERPROOF.
   - D. THE COVER FRAME FOR THE TYPE H JUNCTION BOX SHALL BE CAST INTEGRAL WITH THE CONCRETE BOX.
   - E. FRAMES AND COVERS DEPICTED ARE SHOWN AS EXAMPLES ONLY. SHOP DRAWINGS SHALL BE SUBMITTED IF DETAILS AND DIMENSIONS VARY.

3. CONCRETE BOX:
   - A. CAST IN PLACE CONCRETE BOXES SHALL BE CLASS B CONFORMING TO THE REQUIREMENTS OF SECTION 601 OF THE SPECIFICATIONS. BOXES WHICH ARE PRECAST SHALL HAVE A MINIMUM COMPRESSIVE STRENGTH OF 3000 PSI IN 28 DAYS AND AN AIR CONTENT OF 7 ±2 PERCENT.
   - B. ALL CONDUIT ENTRANCE HOLES TO BE THREE INCH DIAMETER WITH ONE INCH KNOCKOUT WALL. FOUR HOLES PER JUNCTION BOX ARE REQUIRED UNLESS NOTED OTHERWISE.
   - C. WHERE BOX IS SET IN OR POURED AGAINST PAVED AREA, A ½ IN. JOINT FILLER IS TO BE USED.
   - D. WHEN BOX IS POURED IN PLACE, IN OTHER THAN PAVED AREA, THE TOP 3 IN. SHALL BE FORMED.

4. GASKET:
   - A. MATERIAL SHALL MEET THE REQUIREMENTS OF SECTION 715.39 OF THE STANDARD SPECIFICATIONS.
   - B. GASKET SHALL BE HEAVY DUTY AND PROVIDE A LASTING, WATER-TIGHT SEAL.

WEST VIRGINIA DEPARTMENT OF TRANSPORTATION
DIVISION OF HIGHWAYS
STANDARD DETAIL

PREPARED: 8/2018

REVISION DATE

TYPE H JUNCTION BOX
10"x10"

STANDARD SHEET TES-50

TRAFFIC ENGINEERING DIVISION

12/19/2018

Z:\Projects\WVDOT\Standard Details vol II\New_Sheets\Signals\TES-50.dgn

J04C02C03-STDBOR c

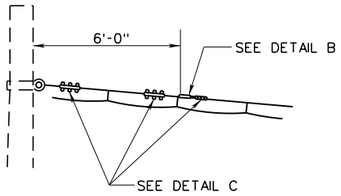

SPAN WIRE CONNECTIONS TO POLE

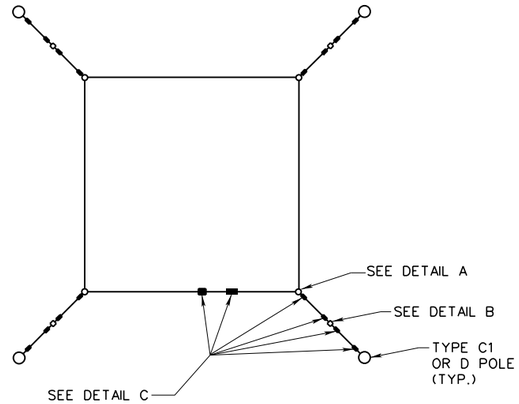

PLAN VIEW

SUSPENDED BOX

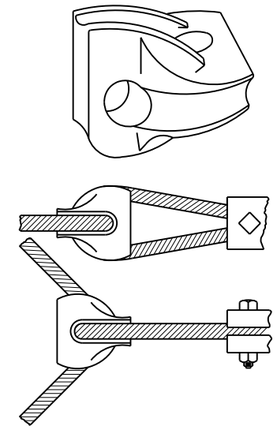

STRAND CONNECTOR

DETAIL A

STRAIN INSULATOR MAY BE SUBSTITUTED FOR THE STRAND CONNECTOR

GENERAL NOTES

1. SUSPENDED BOX:
   A. THE BOX SHALL BE SUSPENDED BY THE STRAND CONNECTOR, ILLUSTRATED IN DETAIL A.
   B. THE BOX SHALL BE INSULATED FROM THE POLES WITH THE STRAIN INSULATOR, ILLUSTRATED IN DETAIL B.
   C. ALL CONNECTIONS SHALL BE MADE WITH A THREE-BOLT CLAMP, ILLUSTRATED IN DETAIL C.

2. STRAND CONNECTOR:
   A. SHALL BE CAPABLE OF WITHSTANDING A TENSILE LOAD OF 25,000 POUNDS.
   B. SHALL BE GROOVED FOR 3/8 IN. OR 1/2 IN. CABLE.

3. STRAIN INSULATOR:
   A. THE STRAIN INSULATOR SHALL HAVE MINIMUM ULTIMATE TENSILE STRENGTH OF 10,000 POUNDS.
   B. THE STRAIN INSULATOR SHALL HAVE AN OUTSIDE DIAMETER OF 2-1/2 IN. AND AN OVERALL LENGTH OF 3-1/2 IN.

4. THREE BOLT CLAMP:
   A. THE THREE BOLT CLAMP SHALL BE GALVANIZED.
   B. THE CLAMP SHALL BE 5-5/8 IN. IN LENGTH AND EACH PLATE SHALL BE 3/8 IN. THICK AND 1-1/2 IN. WIDE.
   C. THE STUD SIZE SHALL BE 7/16 IN.

5. GUY WIRE AND ANCHORS:
   IF STRAIN POLE INSTALLATION REQUIRES GUY WIRING, SEE TES-23 FOR DETAILS AND NOTES.

6. SPLICES: SPAN WIRE SHALL BE ERECTED WITHOUT SPLICES EXCEPT AS NOTED.

7. TYPICAL FOR STRAIN INSULATOR OR STRAND CONNECTOR AS WELL AS FOR STRAIN POLE CLEVIS CONNECTION.

8. TETHER CABLE TO BE INSTALLED SO THAT SIGNAL HEADS ARE PERPENDICULAR TO ROADWAY. TETHER CABLE SHALL NOT BE OUT OF PLUMB WITH MESSENGER CABLE BY MORE THAN 3 IN.

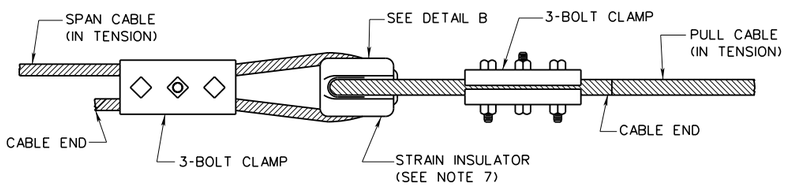

SPAN WIRE CONNECTION CLAMP & INSULATOR

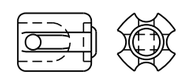

STRAIN INSULATOR

DETAIL B

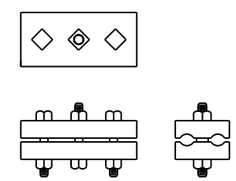

THREE BOLT CLAMP

DETAIL C

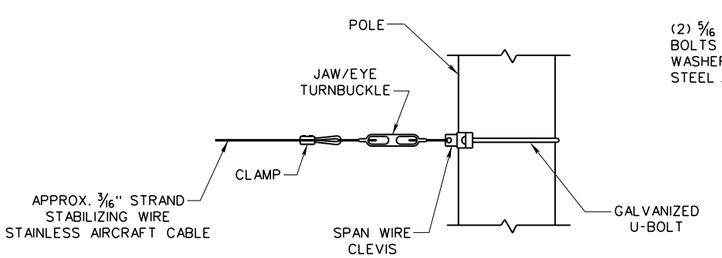

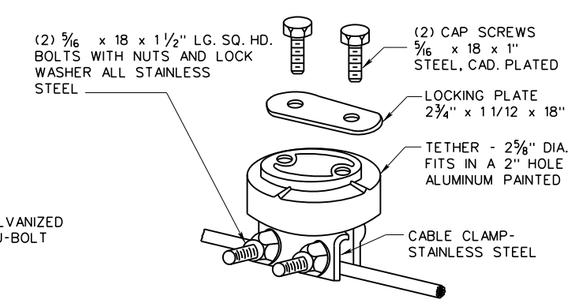

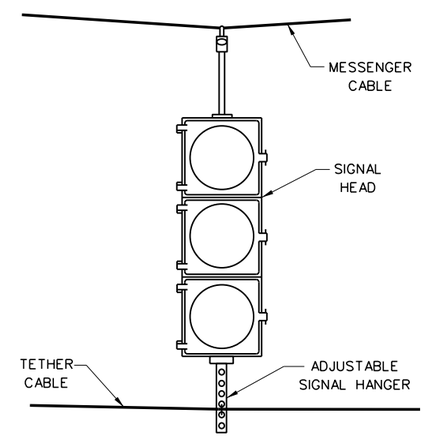

TETHER CABLE ATTACHMENT

WEST VIRGINIA DEPARTMENT OF TRANSPORTATION
DIVISION OF HIGHWAYS
STANDARD DETAIL

PREPARED: 8/2018

REVISION DATE

SPAN WIRE CONNECTIONS AND SIGNAL HEAD TETHERING

STANDARD SHEET TES-80

TRAFFIC ENGINEERING DIVISION

12/19/2018

Z:\Projects\WVDOT\Standard Details vol II\New_Sheets\Signals\TES-80.dgn

J04C02C03-STDBOR c

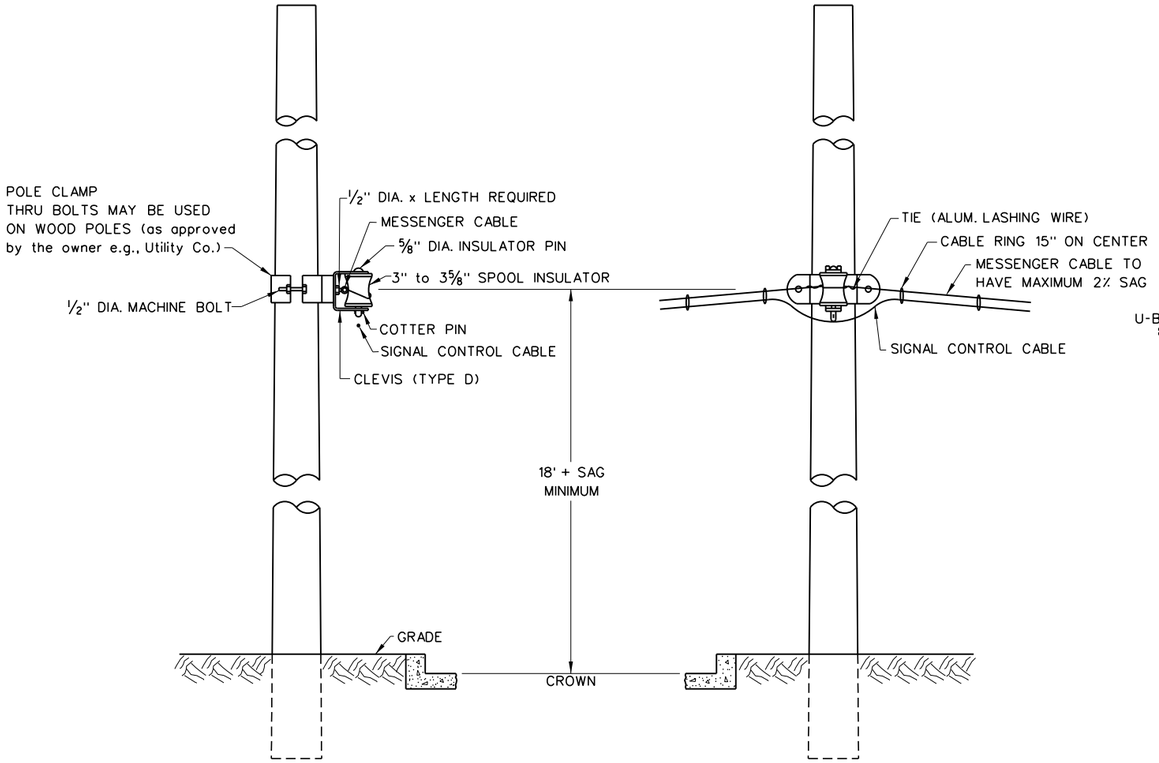

INTERCONNECT CABLE ATTACHMENT
METAL OR WOOD POLES

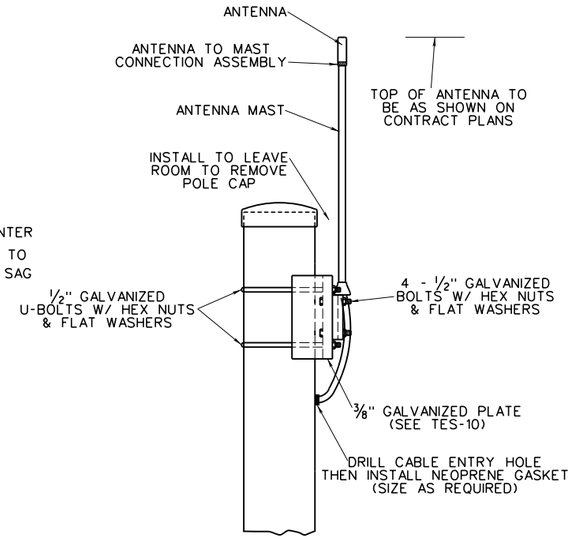

ANTENNA / ANTENNA MAST CONNECTION
TO SIGNAL POLE
(MASTER CONTROLLER)

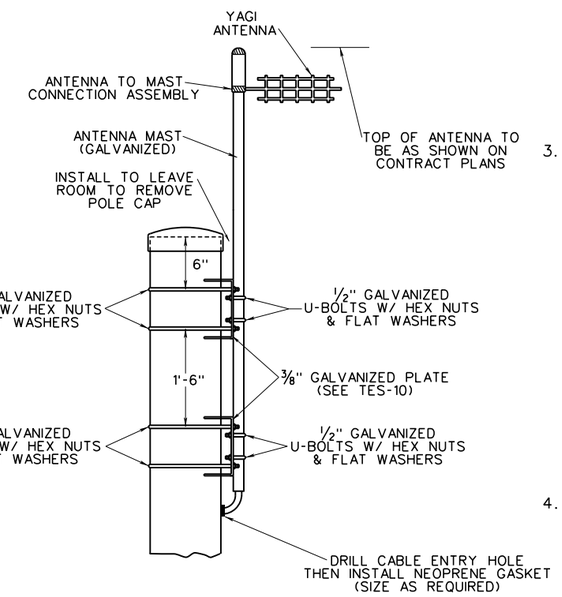

ANTENNA / ANTENNA MAST CONNECTION
TO SIGNAL POLE
(LOCAL CONTROLLERS)

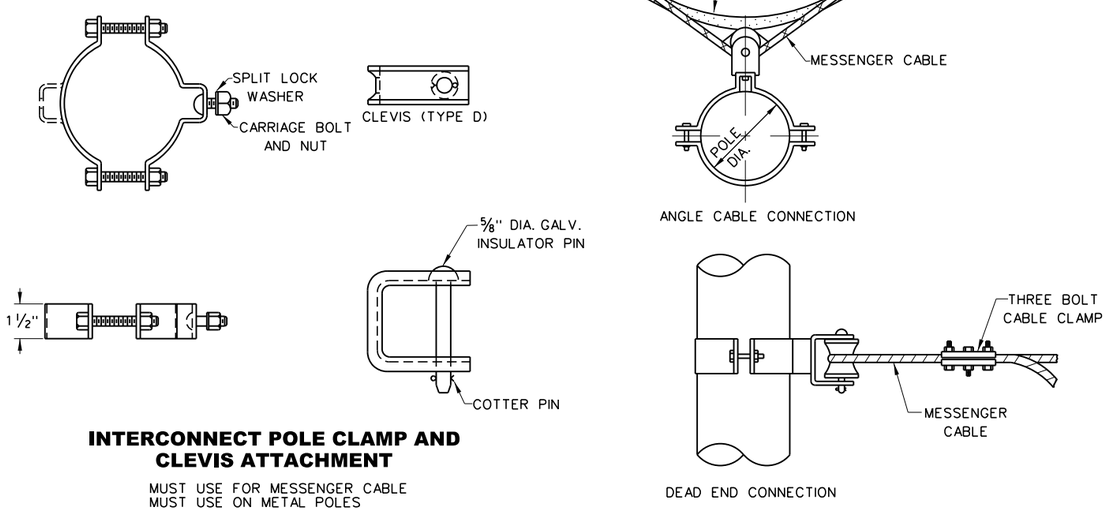

INTERCONNECT POLE CLAMP AND
CLEVIS ATTACHMENT

MUST USE FOR MESSENGER CABLE
MUST USE ON METAL POLES

MESSENGER CABLE CONNECTIONS

GENERAL NOTES

1. AERIAL INTERCONNECT:
   A. THE FOLLOWING EXTRACT FROM THE NATIONAL ELECTRICAL CODE SHALL BE USED AS A GENERAL GUIDELINE. (LOCAL CONDITIONS MAY DICTATE SOME VARIANCE WITH THIS SPACING AT THE DISCRETION OF THE PROJECT ENGINEER).
   B. SIGNAL CONDUCTOR CABLE SUPPORT ON POLES SHALL HAVE A SEPARATION OF NO LESS THAN ONE FOOT EXCEPT WHEN PLACED ON RACKS OR BRACKETS.
   C. SIGNAL CONDUCTOR CABLE SUPPORTED ON POLES SHALL PROVIDE A HORIZONTAL CLIMBING SPACE NOT LESS THAN THE FOLLOWING:
      - SIGNAL CONDUCTOR CABLE LOCATED BELOW EXISTING POWER LINES -- AS DIRECTED BY THE LOCAL POWER COMPANY.
      - SIGNAL CONDUCTOR CABLE LOCATED ABOVE EXISTING COMMUNICATION LINES -- AS DIRECTED BY THE LOCAL POWER COMPANY.
      - SIGNAL CONDUCTOR CABLE LOCATED BELOW EXISTING COMMUNICATION LINES -- NOT ALLOWED UNLESS OTHERWISE DIRECTED ON THE PLANS OR BY THE OWNER.
2. SPREAD SPECTRUM RADIO INTERCONNECT:
   A. SPECIFIC LOCATIONS FOR ANTENNAS TO BE AS DIRECTED ON THE CONTRACT PLANS.
   B. ANTENNAS MAY BE INSTALLED ON SIGNAL MAST ARM IF BETTER FOR RECEPTION. THIS TO BE DETERMINED BY THE CONTRACTOR AND MANUFACTURER.
   C. THE MASTER CONTROLLER LOCATION SHALL BE AN OMNI-DIRECTIONAL TYPE ANTENNA WITH ANTENNA MAST AND ANTENNA CABLE (HARDLINE) INSTALLED TO A RADIO TRANSCEIVER WITHIN THE MASTER CONTROLLER CABINET.
   D. LOCAL CONTROLLERS SHALL HAVE A REMOTE YAGI TYPE ANTENNA WITH ANTENNA MAST AS REQUIRED AND ANTENNA CABLE (HARDLINE) INSTALLED TO A RADIO TRANSCEIVER WITHIN THE INTERSECTION CONTROLLER CABINET.
   E. A MINIMUM OF 3 FT SEPARATION IS REQUIRED IF A SECOND YAGI ANTENNA TO BE INSTALLED.
3. WIRELESS ETHERNET INTERCONNECT:
   A. SPECIFIC LOCATIONS FOR COMMUNICATION ANTENNAS TO BE AS DIRECTED ON THE CONTRACT PLANS.
   B. COMMUNICATION ANTENNAS MAY BE INSTALLED ON SIGNAL MAST ARM IF BETTER FOR RECEPTION. THIS IS TO BE DETERMINED BY THE CONTRACTOR, AND MANUFACTURER AND APPROVED BY TRAFFIC ENGINEERING.
   C. ETHERNET RADIO EQUIPMENT SHALL BE CONFIGURED AS POINT TO POINT AND USED TO FORM A BI-DIRECTIONAL DATA COMMUNICATIONS LINK BETWEEN EACH PAIR OF WIRELES TRANSCEIVERS TO ESTABLISH BI-DIRECTIONAL COMMUNICATION BETWEEN A PAIR OF LOCAL INTERSECTION CONTROLLERS OR A LOCAL INTERSECTION CONTROLLER AND A CENTRAL SYSTEM UNIT. ETHERNET SWITCHES LOCATED IN EACH CABINET SHALL BE USED TO CONNECT THE TRANSCEIVER TO ADDITIONAL TRANSCEIVER(S), THE TRAFFIC SIGNAL CONTROLLER AND ANY OTHER EQUIPMENT IN THE CABINET. THE PRESCRIBED CENTRAL SYSTEM MUST BE ABLE TO INTEGRATE BOTH WIRELESS ETHERNET INTERCONNECT AND FIBER COMMUNICATION CABLE.
4. MATERIALS:
   A. ELECTRICAL ITEMS SHALL CONFORM TO THE REQUIREMENTS OF SECTION 660 OF THE SPECIFICATIONS.
   B. GALVANIZING SHALL CONFORM TO THE REQUIREMENTS OF SECTION 660 AND SUBSECTION 715.42.
   C. STEEL FOR FABRICATED ITEMS SHALL CONFORM TO THE REQUIREMENTS OF SECTION 660 AND SUBSECTION 715.42.

AERIAL
INTERCONNECT SYSTEM

SPREAD SPECTRUM RADIO
INTERCONNECT SYSTEM

WEST VIRGINIA DEPARTMENT OF TRANSPORTATION
DIVISION OF HIGHWAYS
STANDARD DETAIL

PREPARED: 8/2018
REVISION DATE

INTERCONNECT SYSTEMS

STANDARD SHEET TES-81

TRAFFIC ENGINEERING DIVISION

12/19/2018

Z:\Projects\WVDOT\Standard Details vol II\New_Sheets\Signals\TES-81.dgn

J04C02C03-STDBOR c

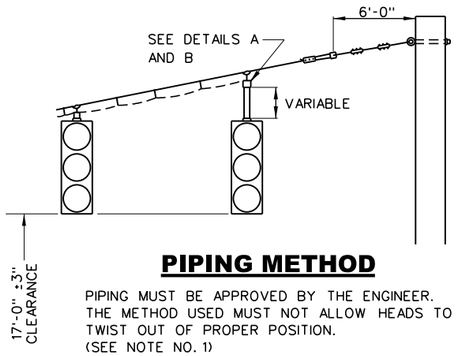

PIPING METHOD

PIPING MUST BE APPROVED BY THE ENGINEER. THE METHOD USED MUST NOT ALLOW HEADS TO TWIST OUT OF PROPER POSITION. (SEE NOTE NO. 1)

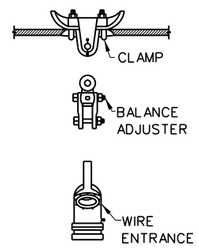

DETAIL A

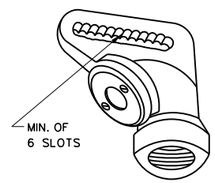

DETAIL B

(WIRE ENTRANCE)

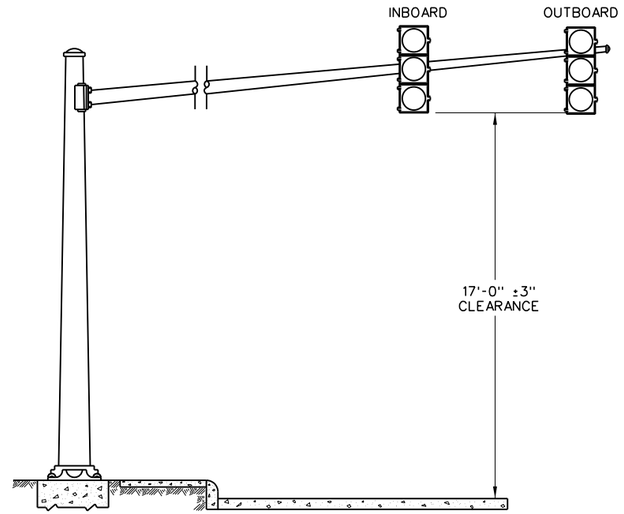

MAST ARM METHOD

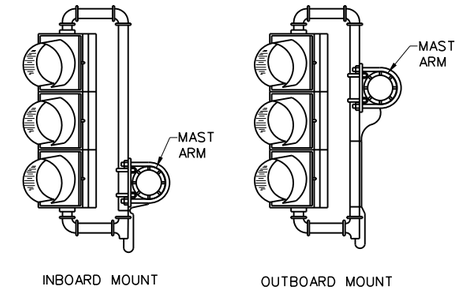

TYPICAL ELEVATION

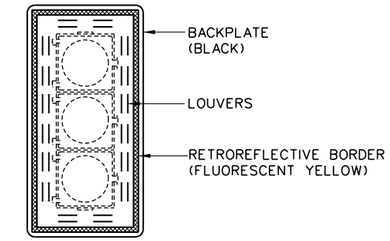

SIGNAL BACKPLATE

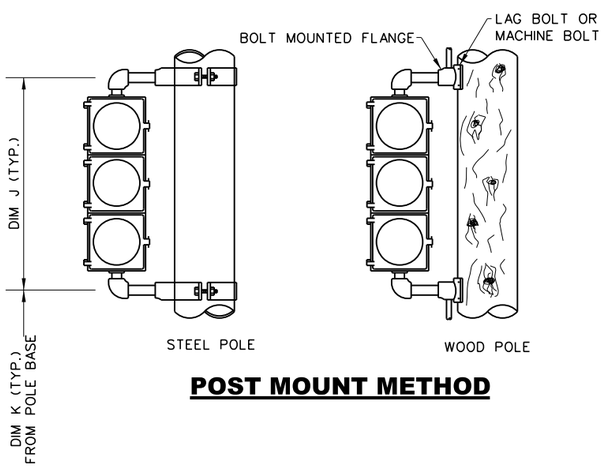

POST MOUNT METHOD

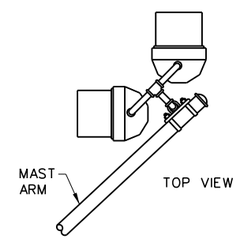

STANDARD TWO-WAY HEADS ATTACHED TO MAST ARM

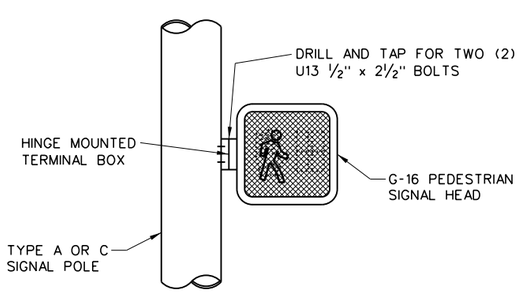

G-16 SIGNAL POLE MOUNT (STEEL)

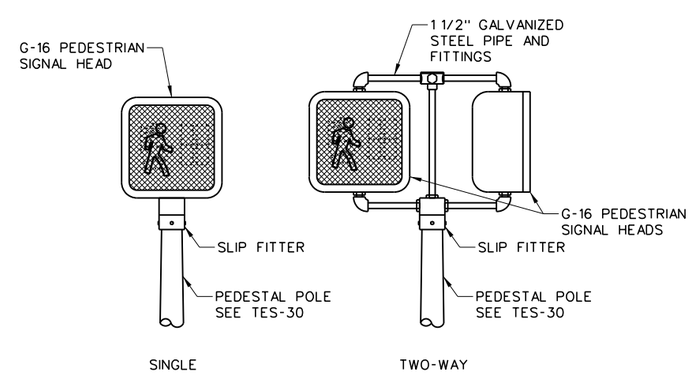

G-16 PEDESTAL POLE MOUNT

GENERAL NOTES

1. PIPING METHOD:
   - A. WHEN SIGNAL HEADS ARE SUSPENDED FROM SPAN WIRE OR MAST ARMS AND NOT RIGIDLY MOUNTED, AT LEAST ONE HEAD, PER SPAN OR ARM, SHALL BE DIRECTLY SECURED TO THE SPAN WIRE OR MAST ARM.
   - B. IF APPROVED BY THE ENGINEER, THE REMAINING HEADS MAY BE PIPED TO ACHIEVE ROADWAY CLEARANCE.
   - C. ALL SIGNAL HEADS SHALL HAVE A 17 FEET, PLUS OR MINUS 3 INCH CLEARANCE FROM BOTTOM OF THE SIGNAL HEAD TO THE PAVEMENT DIRECTLY BELOW IT, (UNLESS OTHERWISE SPECIFIED).
2. POST MOUNT METHODS:
   - A. POST MOUNT POSITION IS NOTED ON CONTRACT PLANS.
   - B. BOLT MOUNTED POST MOUNTS SHALL BE USED ONLY ON WOOD POLES.
   - C. BRACKET (POST) MOUNTED SIGNAL HEADS SHALL BE INSTALLED AND ARRANGED TO ALLOW FULL 180° OPENING OF THE SIGNAL HEAD ACCESS DOOR.
3. MAST ARM MOUNT METHODS: ALL VIEWS OF HARDWARE MOUNTING DEVICES MAY BE APPLIED TO SINGLE HEADS AS WELL AS FOR DOUBLE HEAD INSTALLATIONS,
4. G-16 PEDESTRIAN HEADS
   - A. PEDESTRIAN HEAD TO BE CAST ALUMINUM AND BOTTOM HINGED.
   - B. SYMBOLIC DISPLAY TO BE MINIMUM 18 IN x 17 IN.
   - C. HIGH IMPACT GRID TYPE VISOR REQUIRED. NO OTHER VISOR TO BE USED UNLESS OTHERWISE SPECIFIED.
5. BACKPLATE:
   - A. BACKPLATES SHALL BE LOUVERED AND BLACK.
   - B. BACKPLATES SHALL HAVE A 1 IN. RETROREFLECTIVE BORDER WITH A 1 IN. MARGIN. THIS BORDER SHALL COMPRISE OF TYPE IX, FLUORESCENT YELLOW, PRESSURE SENSITIVE RETROREFLECTIVE SHEETING AND PLACED ON PERIMETER OF THE FACE OF ALL BACKPLATES.
6. SIGNAL HEADS
   - A. ALL SIGNAL HEADS AND VISORS TO BE YELLOW IN COLOR UNLESS OTHERWISE SPECIFIED IN THE CONTRACT PLANS.
   - B. ALL SIGNAL HEAD CLAMPS ARE TO BE MADE OF STEEL.

WEST VIRGINIA DEPARTMENT OF TRANSPORTATION
DIVISION OF HIGHWAYS
STANDARD DETAIL

PREPARED: 8/2018
REVISION DATE

VEHICULAR AND PEDESTRIAN HEADS

STANDARD SHEET TES-90

TRAFFIC ENGINEERING DIVISION

12/19/2018

Z:\Projects\WVDOT\Standard Details vol II\New_Sheets\Signals\TES-90.dgn

J04C02C03-STDBOR c

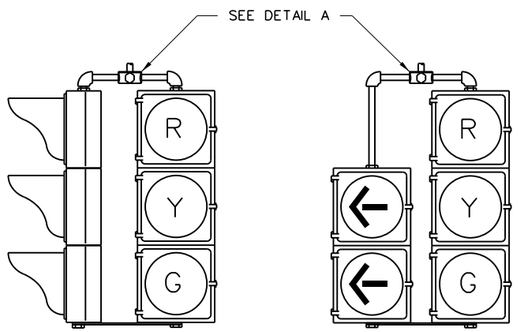

TYPICAL COMBINATIONS IN TWO-WAY AND FIVE SECTION ASSEMBLIES

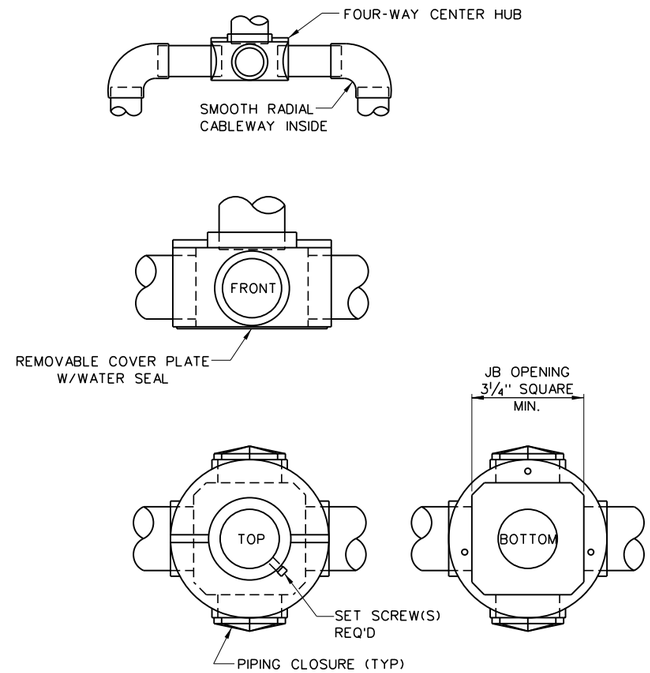

DETAIL A

GENERAL NOTES

1. COMBINATION SIGNAL HEADS:
   - A. TWO-WAY, THREE-WAY, AND FOUR-WAY SIGNAL HEAD ASSEMBLIES SHALL HAVE THE RED SECTIONS LEVEL. IN SUCH CASES THE BOTTOM OF THE LOWEST SIGNAL HEAD SHALL BE 17 FEET (PLUS OR MINUS THREE INCHES) ABOVE THE PAVEMENT DIRECTLY BELOW IT, UNLESS OTHERWISE SPECIFIED.
   - B. THE BOTTOM HORIZONTAL BRACKET OF THE SIGNAL HEAD ASSEMBLIES SHALL BE ON THE BOTTOM OF THE LOWEST HEAD.
   - C. PIPING TO COMPENSATE FOR DIFFERENT LENGTH SECTIONS SHALL BE DONE AT THE BOTTOM AS SHOWN ON TES-90. THE PIPE SHALL BE 1-1/2 IN. GALVANIZED STEEL PIPE PAINTED TO MATCH SIGNAL HEADS.

2. LENS ARRANGEMENT:
   - A. LENS ARRANGEMENT (A) IS TYPICAL FOR DUAL INDICATIONS ON STANDARD LANE TREATMENT AND PERMISSIVE ONLY LEFT TURNS.
   - B. LENS ARRANGEMENT (B) IS TYPICAL FOR SEPARATE SIGNAL FACES WITH PROTECTED ONLY MODE LEFT TURNS.
   - C. LENS ARRANGEMENT (C) IS TYPICAL FOR STANDARD LANE TREATMENT WHERE ONLY ONE SIGNAL HEAD IS USED TO CONTROL THE LANE.
   - D. LENS ARRANGEMENT (D) IS TYPICAL FOR SITUATION ALLOWING A RIGHT TURN ON RED THAT IS PROTECTED/PERMISSIVE.
   - E. LENS ARRANGEMENT (E) IS TYPICAL FOR SITUATION ALLOWING PROTECTED AND PERMISSIVE LEFT TURN MOVEMENTS DURING THE DIFFERENT PHASES.
   - F. LENS ARRANGEMENT (F) IS TYPICAL FOR SHARED SIGNAL FACES OF PROTECTED ONLY MODE LEFT-TURN MOVEMENTS.
   - G. LENS ARRANGEMENT (G) IS USED FOR PROTECTED THRU LANE SITUATION. ARROW ORIENTATION MAY VARY.

3. SUPPORT HARDWARE:
   - A. ALL UPPER SIGNAL SUPPORT HARDWARE AND PIPING UP TO, AND INCLUDING THE WIRE INLET FITTING MUST BE FERROUS METAL FOR SIGNAL DISPLAYS OF TWO OR MORE HEADS.
   - B. FOUR-WAY CENTER HUB REQUIRED FOR ALL APPLICATIONS.

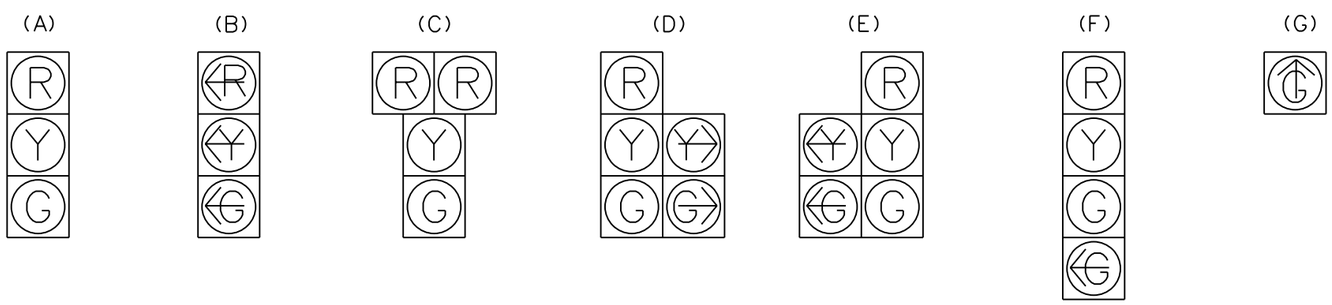

TYPICAL ARRANGEMENTS OF LENSES
SEE NOTE 2

WEST VIRGINIA DEPARTMENT OF TRANSPORTATION
DIVISION OF HIGHWAYS
STANDARD DETAIL

PREPARED: 8/2018

REVISION DATE

SIGNAL FACES AND MOUNTING HARDWARE

STANDARD SHEET TES-91

TRAFFIC ENGINEERING DIVISION

J04C02C03-STDBDR c
Z:\Projects\WVDOT\Standard Details vol II\New_Sheets\Signals\TES-91.dgn
12/19/2018

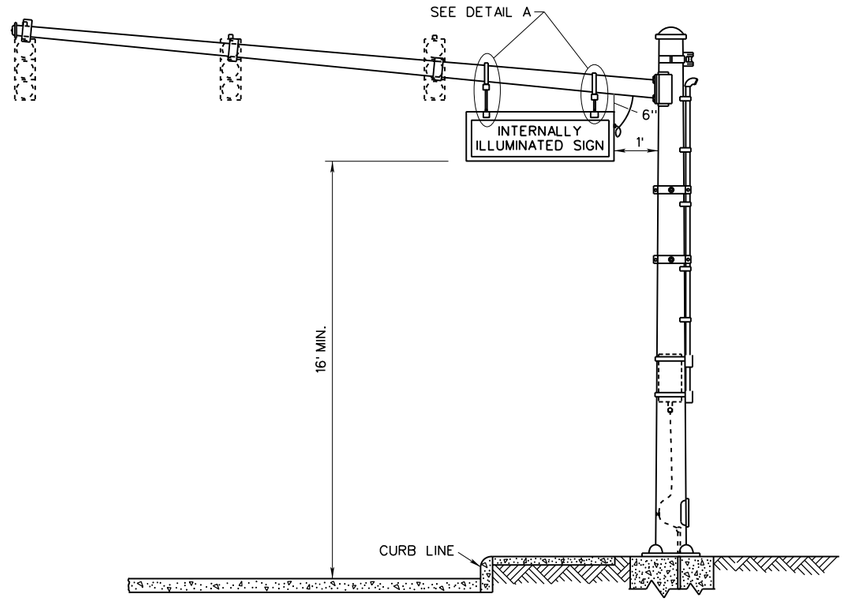

MAST ARM ATTACHMENT

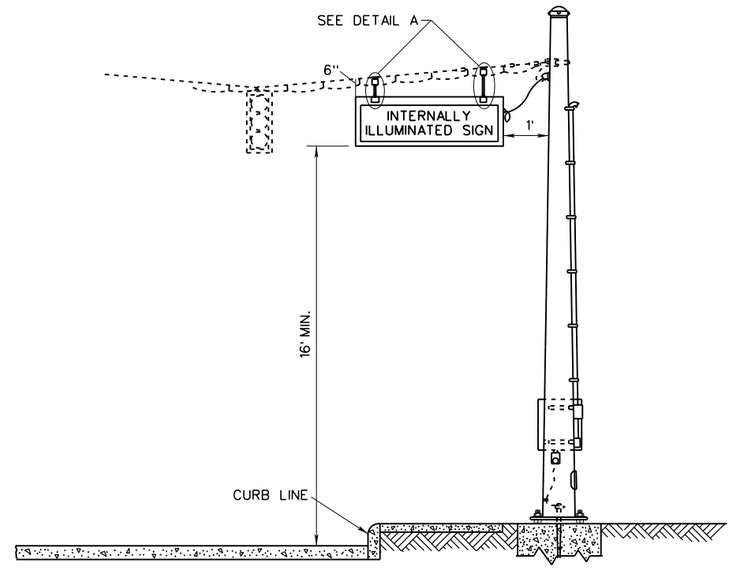

SPAN WIRE ATTACHMENT

GENERAL NOTES

1. INTERNALLY ILLUMINATED STREET NAME SIGNS (IISNS) SHALL BE LED TYPE AND SHALL BE AS PROVIDED ON THE WVDOH APPROVED PRODUCT LIST.
2. IISNS SHALL BE 4 FT, 6 FT OR 8 FT IN LENGTH, SINGLE OR DOUBLE SIDED AS CALLED FOR ON THE CONTRACT PLANS.
3. IISNS SHALL INCLUDE SIGN ASSEMBLY, ELECTRICAL COMPONENTS, SIGN MOUNTING HARDWARE, CABLE, PHOTOELECTRIC CELL, POWER SUPPLY, MISC. HARDWARE, TESTING, AND ALL WORK REQUIRED TO PROPERLY INSTALL THE SIGN.
4. IISNS SHALL BE ATTACHED TO MAST ARM OR SPAN WIRE AS LONG AS IT CAN BE POSITIONED SO THAT THE FACE OF THE SIGN IS AT OR NEAR PERPENDICULAR TO APPROACHING TRAFFIC. OTHERWISE, SIGN ARM MOUNT SHALL BE USED.

INTERNALLY ILLUMINATED SIGN INSTALLATION

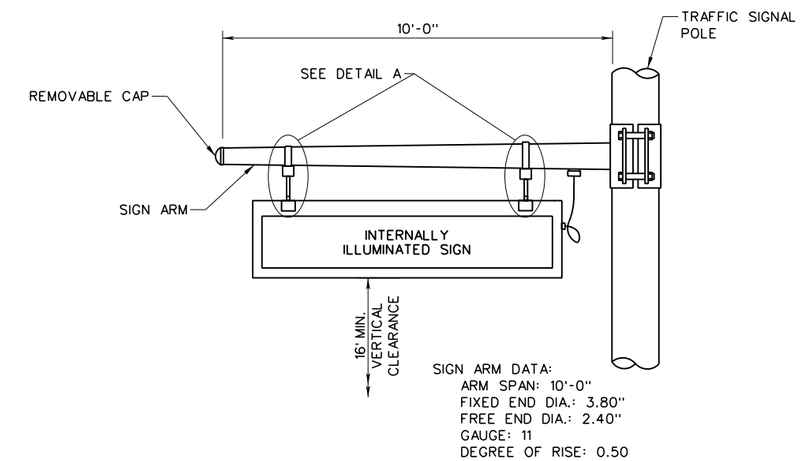

SIGN ARM MOUNT

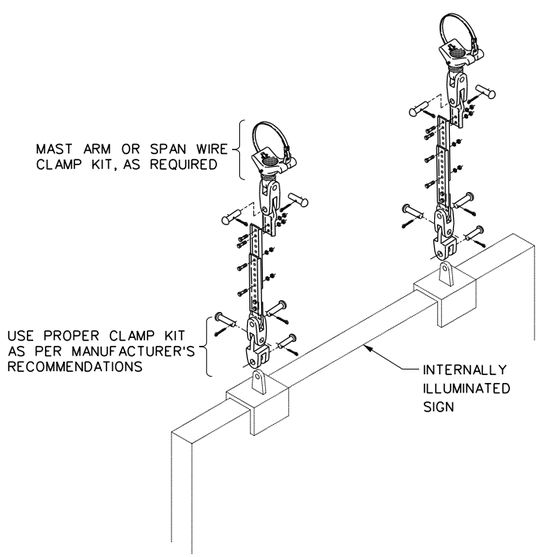

DETAIL B

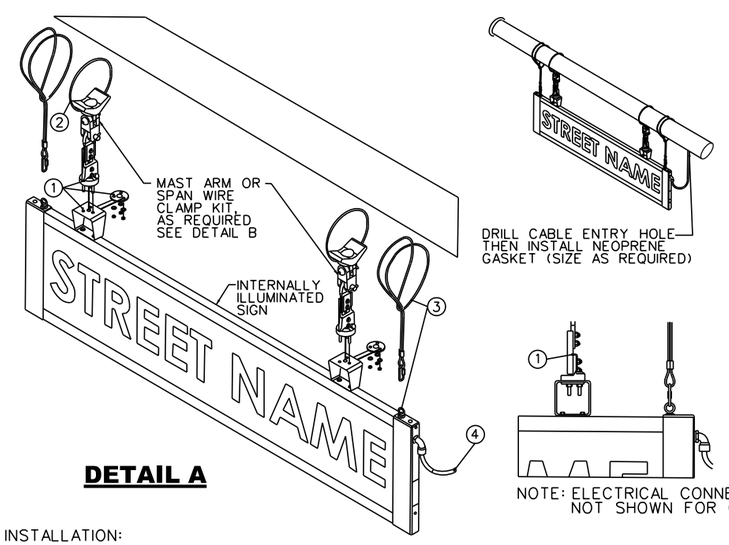

NOTE: ELECTRICAL CONNECTIONS NOT SHOWN FOR CLARITY.

DETAIL A

INSTALLATION:

1. CONNECT APPROVED SIGN MOUNTING BRACKETS TO SIGN'S UNDERHANGING BRACKETS. APPROVED BRACKETS, SUCH AS PELCO SE-5015 OR SE-5146 MUST BE ORIENTED AS SHOWN.
2. RIGIDLY ATTACH TOP SECTION OF MOUNTING BRACKET TO MAST ARM, USING EITHER THE BANDING OR CABLING PROVIDED WITH THE MOUNTING BRACKET.
3. INSTALL TWO SAFETY CABLES, ONE FOR EACH END. LOOP SAFETY CABLE OVER MAST ARM, THROUGH ITSELF, AND THEN PERMANENTLY ATTACH IT TO PROVIDED EYEBOLT.
4. CONNECT ELECTRICAL TERMINATIONS USING LOCALLY-APPROVED METHODS:
   BLACK: LINE VOLTAGE, 120-240 VAC, 50/60 Hz
   WHITE: NEUTRAL
   GREEN: GROUND

WEST VIRGINIA DEPARTMENT OF TRANSPORTATION
DIVISION OF HIGHWAYS
STANDARD DETAIL

PREPARED: 8/2018
REVISION DATE

INTERNALLY ILLUMINATED STREET NAME SIGNS

STANDARD SHEET TES-92

TRAFFIC ENGINEERING DIVISION

12/19/2018

Z:\Projects\WVDOT\Standard Details vol II\New_Sheets\Signals\TES-92.dgn

J04C02C03-STDBDR c

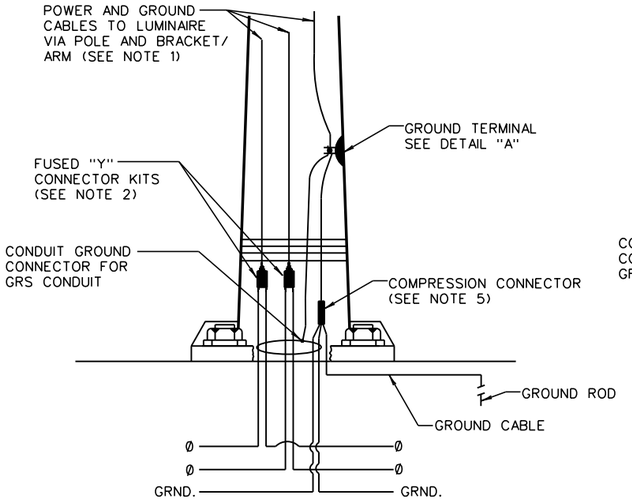

ANCHOR AND FLUTED ALUMINUM BREAKAWAY COUPLING BASE POLES

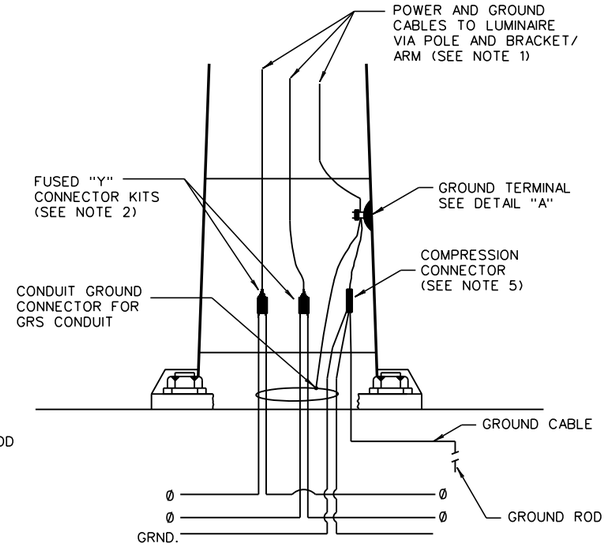

CAST ALUMINUM BASE POLES

240 VOLT SYSTEM, TWO WIRE PLUS GROUND

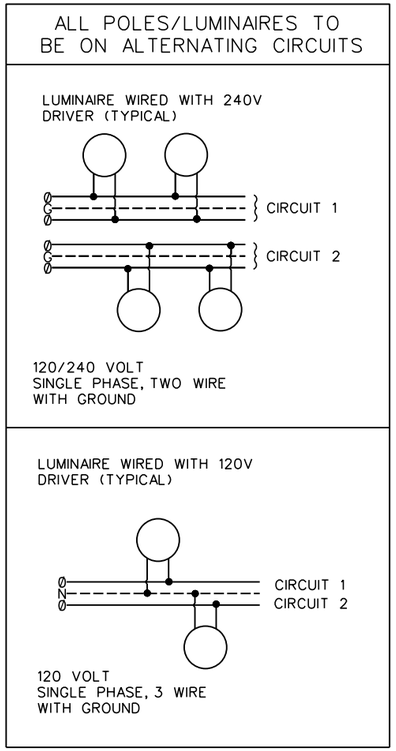

NOTES:

1. THIS SHEET APPLIES TO ALL LIGHTING, ROADWAY AND BRIDGE, UNLESS STATED OTHERWISE. SEE WVDOH STD SPECS, SECTION 662, ROADWAY LIGHTING.
2. FOR FUSED CONNECTOR KIT DETAILS SEE TEL-09A AND TEL-09B.
3. ALL INTERNAL ROADWAY LIGHTING SHALL BE DONE USING THWN #10 AWG STRANDED COPPER WIRE.
4. CONDUIT SHALL EXTEND NO MORE THAN 4 INCHES ABOVE TOP OF FOUNDATION INTO POLE BASE AND SHALL HAVE BUSHINGS. (UNLESS OTHERWISE INDICATED ON THAT BASE DETAIL).
5. A COMPRESSION CONNECTOR SHALL BE INSTALLED AT THIS LOCATION WHICH SHALL CONNECT THE GROUND ROD WIRE AND THE SYSTEM INSULATED GROUND WIRES.
6. COLOR CODING FOR THE ROADWAY LIGHTING CABLE SHALL BE PERMANENT SOLID COLOR AS FOLLOWS FOR SINGLE PHASE CIRCUITS:

LEG A	BLACK
LEG B	RED
NEUTRAL	WHITE OR GRAY
EQUIP GRND	GREEN

SEE WVDOH STD SPECS, SECT. 662.2.10, WIRE AND CABLE, FOR ADDITIONAL GUIDANCE.

7. GROUND RODS SHALL BE A COPPERCLAD STEEL, A MINIMUM OF 3/4" DIA. BY 10 FEET IN LENGTH, SOLID, WITH DRIVING POINT AT ONE END.
8. GROUND WIRES SHALL BE INSULATED (GREEN) COPPER CONDUCTOR EQUAL IN SIZE TO THE LARGEST ADJOINING PHASE WIRE EXCEPT WHERE OTHERWISE CALLED FOR ON THE PLANS.
9. SEE TEL-15B FOR ADDITIONAL GROUNDING REQUIREMENT DETAILS.

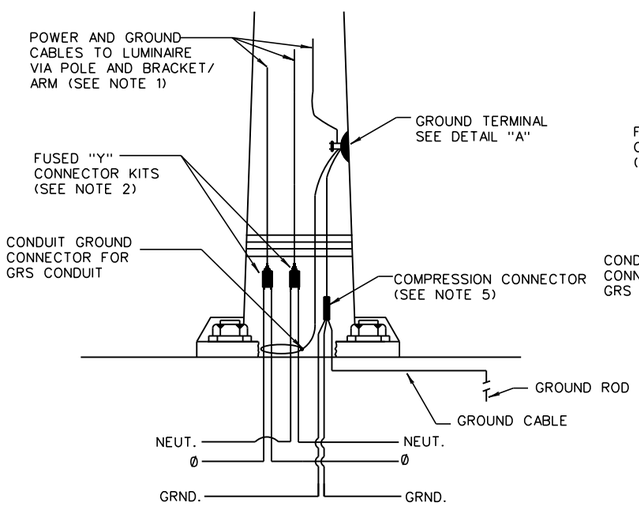

ANCHOR AND FLUTED ALUMINUM BREAKAWAY COUPLING BASE POLES

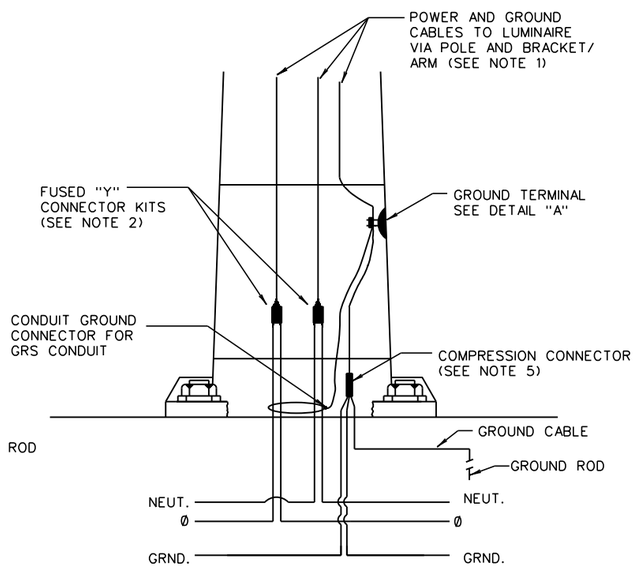

CAST ALUMINUM BASE POLES

120 VOLT SYSTEM, TWO WIRE PLUS GROUND

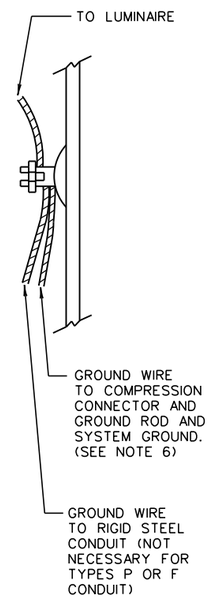

DETAIL "A"

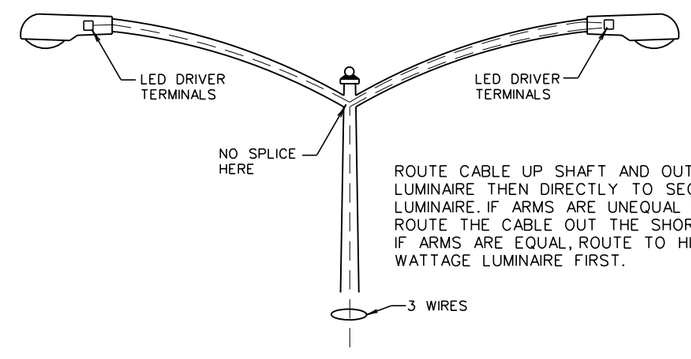

DETAIL "B"

WEST VIRGINIA DEPARTMENT OF TRANSPORTATION
DIVISION OF HIGHWAYS
STANDARD DETAIL

PREPARED: 8/2018
REVISION DATE

POLE AND SYSTEM WIRING DETAILS

STANDARD SHEET TEL-01

TRAFFIC ENGINEERING DIVISION

12/9/2018

Z:\Projects\WVDOT\Standard Details vol II\New_Sheets\Lighting\TEL-01.dgn

J04C02C03-STDBOR c

SIGN LIGHTING CONTROL CABINET WIRING DIAGRAMS

(FOR USE WITH ROADWAY LIGHTING POWER SOURCE)

GENERAL

1. DETAILS ON THIS SHEET SHALL APPLY TO EACH OVERHEAD SIGN STRUCTURE THAT SUPPORTS EXTERNALLY ILLUMINATED SIGNS POWERED FROM ROADWAY LIGHTING CIRCUITS.
2. SEE NOTES IF SIGN IS ON ITS OWN SERVICE AND IS THE FIRST DISCONNECT MEANS FROM SERVICE.
3. ADDITIONAL NOTES APPLICABLE TO THIS SHEET MAY BE FOUND ON STANDARD SHEETS TE6-3B, TE6-3C, AND TE6-3D.

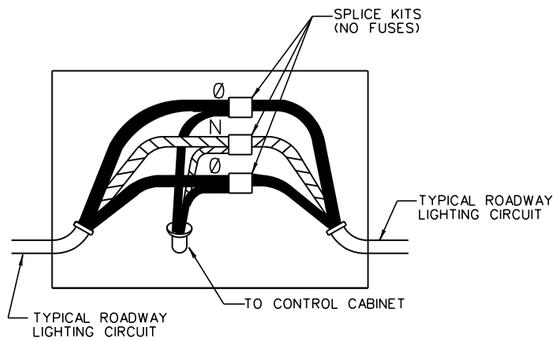

120/240 VOLT JUNCTION BOX DETAIL

(GROUND NOT SHOWN)

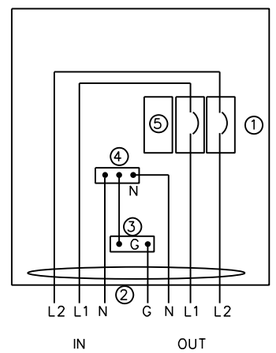

120/240 VOLT WIRING DIAGRAM

WITH 120 VOLT CIRCUITS

LEGEND

1. TWO SINGLE POLE CIRCUIT BREAKERS. SEE NOTE 1.
2. CONDUIT HUB (POLE TYPE) (2" CHASE NIPPLE)
3. SYSTEM GROUND - BOND TO NEUTRAL BAR ONLY IF CABINET IS FIRST DISCONNECT MEANS FROM SERVICE
4. SOLID NEUTRAL GROUND BAR
5. 20A 1P SPARE BREAKER

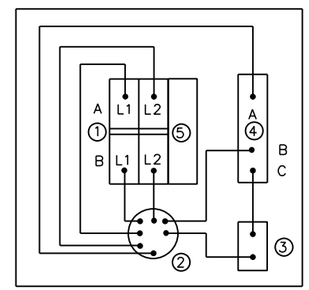

WIRING

1A - LINE SERVICE

1B - TO SIGN (LOAD)

3 - SYSTEM GROUND

4A - LINE NEUTRAL

4B - LINE NEUTRAL

4C - NEUTRAL TO GROUND (IF REQ'D - SEE LEGEND NOTE 3 ABOUT BONDING)

5 - 20A 1P SPARE BREAKER

120/240 VOLT CONTROL CABINET

WITH 120 VOLT CIRCUITS

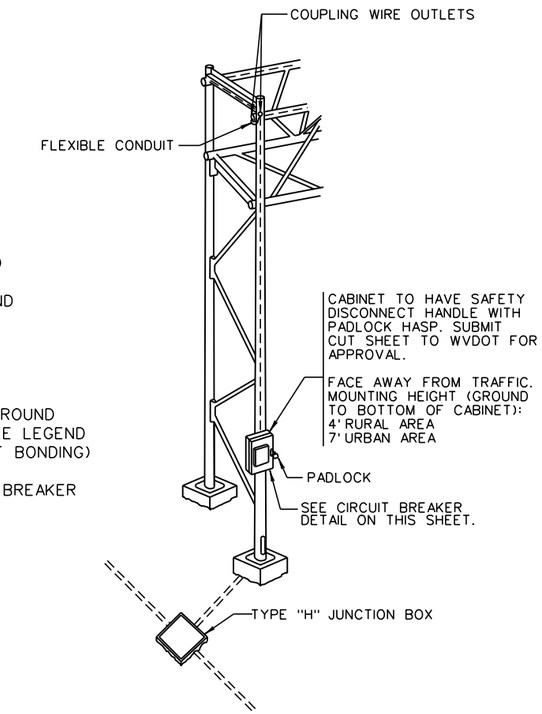

TYPICAL INSTALLATION

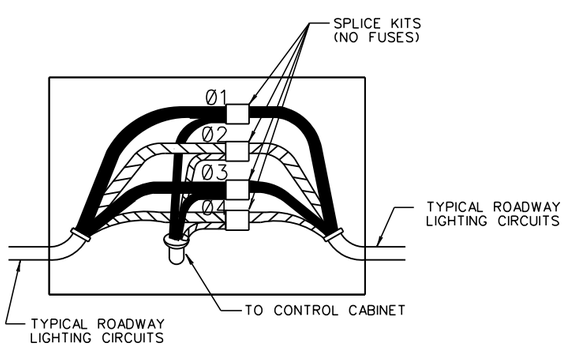

240 VOLT JUNCTION BOX DETAIL

(GROUND NOT SHOWN)

TWO CIRCUITS FOR ALTERNATING FIXTURES.
ALL FOUR WIRES ARE PHASE WIRES.

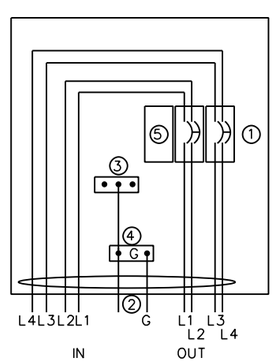

240 VOLT WIRING DIAGRAM

WITH 240 VOLT CIRCUITS

LEGEND

1. TWO - TWO POLE CIRCUIT BREAKERS. SEE NOTE 1.
2. CONDUIT HUB (POLE TYPE) (2" CHASE NIPPLE)
3. SYSTEM GROUND - BOND TO NEUTRAL BAR ONLY IF CABINET IS FIRST DISCONNECT MEANS FROM SERVICE
4. SOLID NEUTRAL GROUND BAR
5. 25A 2P SPARE BREAKER

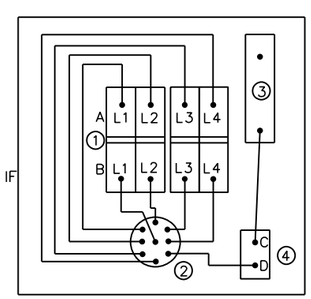

WIRING

1A - LINE SERVICE

1B - TO SIGN (LOAD)

3 - SYSTEM GROUND

4C - NEUTRAL TO GROUND (IF REQ'D - SEE LEGEND NOTE 3 ABOUT BONDING)

4D - SYSTEM GROUND

5 - 25A 2P SPARE BREAKER (NOT SHOWN)

120/240 VOLT CONTROL CABINET

WITH 240 VOLT CIRCUITS

NOTE

1. COMPONENTS SHALL BE SIZED AS REQUIRED ACCORDING TO LOAD.

WEST VIRGINIA DEPARTMENT OF TRANSPORTATION
DIVISION OF HIGHWAYS
STANDARD DETAIL

PREPARED: 8/2018
REVISION DATE

SIGN LIGHTING WITH ROADWAY LIGHTING

STANDARD SHEET TEL-06

TRAFFIC ENGINEERING DIVISION

12/19/2018

Z:\Projects\WVDOT\Standard Details vol II\New_Sheets\Lighting\TEL-06.dgn

J04C02C03-STDBOR c

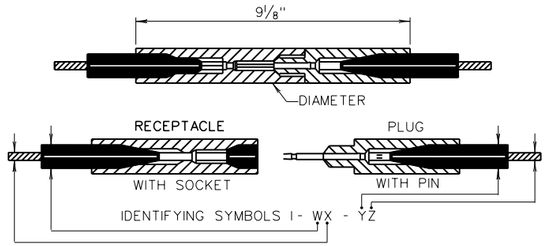

TO SPECIFY THE PROPER KIT FOR AN INSTALLATION SELECT FROM THE TABLES BELOW THE SYMBOLS WHICH COINCIDE WITH THE REQUIREMENTS AND SUBSTITUTE FOR (W,X) (Y,Z) RESPECTIVELY.

CABLE DIAMETER		SYMBOL FOR X AND Z
MIN.	MAX.	
.195"	.260"	B*
.250"	.330"	C*
.320"	.430"	D*
.420"	.585"	E
.575"	.785"	F
.775"	.985"	G
.975"	1.125"	H

CONDUCTOR SIZE AWG		SYMBOL FOR X AND Z
CONCENTRIC STRANDED	SOLID	
•10, •12	•8, •10	6
•8	•6	4
•6	•4	3
•4	-	2
•2	-	1

* MOLDED RUBBER ADAPTERS ARE A PART OF THESE KITS FOR SMALL DIAMETER CABLES.

EXAMPLE

IF THE INSTALLATION REQUIRES A RECEPTACLE FOR NO. 6 STRANDED CONDUCTOR AND A CABLE DIAMETER OF .660" AND A PLUG FOR NO. 8 SOLID CONDUCTOR AND A CABLE DIAMETER OF .460", THE KIT REQUIRED WILL BE I-F3-E6.

TYPE 1

IN-LINE SELF-LOCKING CONNECTOR KIT
* FOR PULL BOX INSTALLATION

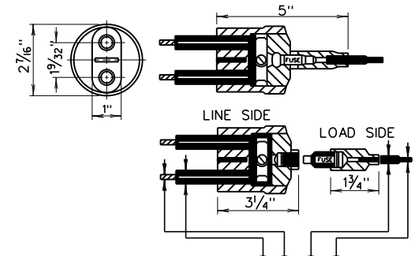

CABLE DIAMETER		SYMBOL FOR W
MIN.	MAX.	
.195"	.260"	B
.250"	.330"	C
.320"	.380"	DA
.370"	.430"	DB
.420"	.505"	EA
.495"	.585"	EB
.575"	.685"	FA
.675"	.785"	FB

COPPER CONDUCTOR (AWG)		SYMBOL FOR X
CONCENTRIC STRANDED	SOLID	
-	•8	6
•8	•6	4
•6	•4	3
•4	-	2
•2	-	1
•1	-	0
•1/0	-	10
•2/0	-	20

CABLE DIAMETER		SYMBOL FOR Y
MIN.	MAX.	
.120"	.160"	S
.155"	.205"	A
.195"	.260"	B
.250"	.330"	C
.320"	.430"	D

COPPER CONDUCTOR (AWG)		SYMBOL FOR Z
CONCENTRIC STRANDED	SOLID	
•14,•16	•12,•14	8
•10,•12	•8,•10	6
•8	•6	4
•6	•4	3

EXAMPLE

IF THE LINE OUTSIDE DIAMETER W IS .42" AND THE CONDUCTOR X IS NO. 6 STRANDED, AND THE LOAD SIDE OUTSIDE DIAMETER Y IS .29" AND THE CONDUCTOR Z IS NO. 12 STRANDED THE KIT REQUIRED WILL BE II-DB3-C6.

TYPE 2

FUSED "Y" CONNECTOR KIT
FOR POLE BASE INSTALLATION

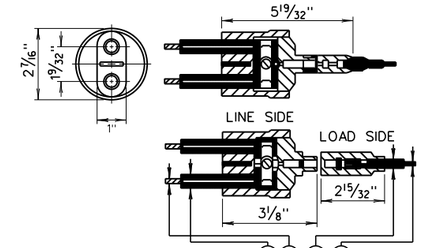

CABLE DIAMETER		SYMBOL FOR W
MIN.	MAX.	
.195"	.260"	B
.250"	.330"	C
.320"	.380"	DA
.370"	.430"	DB
.420"	.505"	EA
.495"	.585"	EB
.575"	.685"	FA
.675"	.785"	FB

COPPER CONDUCTOR (AWG)		SYMBOL FOR X
CONCENTRIC STRANDED	SOLID	
-	•8	6
•8	•6	4
•6	•4	3
•4	-	2
•2	-	1
•1	-	0
•1/0	-	10
•2/0	-	20

CABLE DIAMETER		SYMBOL FOR Y
MIN.	MAX.	
.120"	.160"	S
.155"	.205"	A
.195"	.260"	B
.250"	.330"	C
.320"	.430"	D

COPPER CONDUCTOR (AWG)		SYMBOL FOR Z
CONCENTRIC STRANDED	SOLID	
•14,•16	•12,•14	8
•10,•12	•8,•10	6
•8	•6	4
•6	•4	3

EXAMPLE

IF THE LINE SIDE CABLE OUTSIDE DIAMETER W IS .54" AND THE CONDUCTOR X IS NO. 2 STRANDED, AND THE LOAD SIDE CABLE OUTSIDE DIAMETER Y IS .29" AND THE CONDUCTOR Z IS NO. 12 STRANDED, THE KIT REQUIRED WILL BE III-EBI-C6.

TYPE 3

UNFUSED "Y" CONNECTOR KIT
FOR POLE BASE INSTALLATION

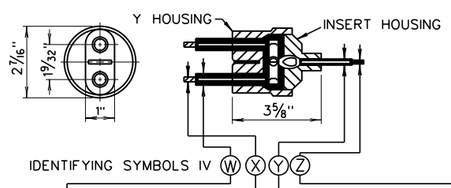

CABLE DIAMETER		SYMBOL FOR W
MIN.	MAX.	
.195"	.260"	B
.250"	.330"	C
.320"	.380"	DA
.370"	.430"	DB
.420"	.505"	EA
.495"	.585"	EB
.575"	.685"	FA
.675"	.785"	FB

COPPER CONDUCTOR (AWG)		SYMBOL FOR X
CONCENTRIC STRANDED	SOLID	
-	•8	6
•8	•6	4
•6	•4	3
•4	-	2
•2	-	1
•1	-	0
•1/0	-	10
•2/0	-	20

CABLE DIAMETER		SYMBOL FOR Y
MIN.	MAX.	
.120"	.160"	S
.155"	.205"	A
.195"	.260"	B
.250"	.330"	C
.320"	.430"	D
.420"	.585"	E
.575"	.785"	F

COPPER CONDUCTOR (AWG)		SYMBOL FOR Z
CONCENTRIC STRANDED	SOLID	
•14,•16	•12,•14	8
•10,•12	•8,•10	6
•8	•6	4
•6	•4	3
•4	-	2
•2	-	1
•1	-	0
•1/0	-	10
•2/0	-	20

EXAMPLE

IF THE TWIN CABLE OUTSIDE DIAMETER W IS .54" AND THEIR CONDUCTOR X IS NO. 2 STRANDED, AND THE SINGLE CABLE OUTSIDE DIAMETER Y IS .29" AND THE CONDUCTOR Z IS NO. 12 STRANDED, THE KIT REQUIRED WILL BE IV-EB1-C6.

TYPE 4

UNFUSED "Y" CONNECTOR KIT
* FOR PULL BOX INSTALLATION

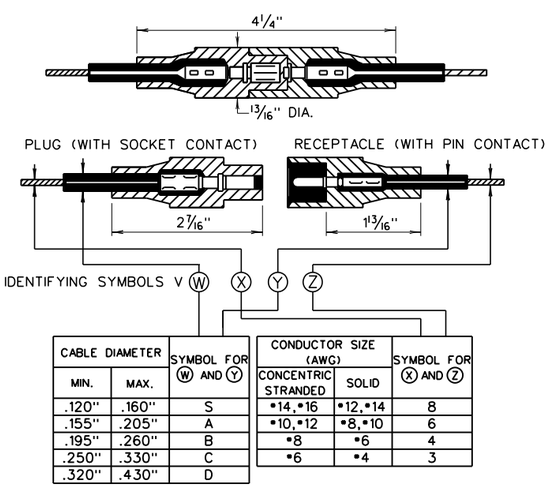

CABLE DIAMETER		SYMBOL FOR W AND Y
MIN.	MAX.	
.120"	.160"	S
.155"	.205"	A
.195"	.260"	B
.250"	.330"	C
.320"	.430"	D

CONDUCTOR SIZE (AWG)		SYMBOL FOR X AND Z
CONCENTRIC STRANDED	SOLID	
•14,•16	•12,•14	8
•10,•12	•8,•10	6
•8	•6	4
•6	•4	3

EXAMPLE

IF THE INSTALLATION REQUIRES A PLUG FOR A CABLE DIAMETER OF .38" AND A NO. 8 STRANDED CONDUCTOR, AND A RECEPTACLE FOR A CABLE DIAMETER OF .27", AND A NO. 14 STRANDED CONDUCTOR, THE KIT REQUIRED WILL BE V-D4-C8.

TYPE 5

UNFUSED IN-LINE CONNECTOR KIT
FOR JUNCTION BOX INSTALLATION

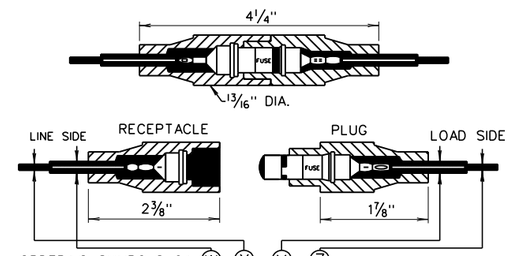

TABLE A

CABLE DIAMETER		SYMBOL FOR W AND Y
MIN.	MAX.	
.110"	.110"	T
.120"	.160"	S
.155"	.205"	A
.195"	.260"	B
.250"	.330"	C
.320"	.430"	D

TABLE B

CONDUCTOR SIZE (AWG)		SYMBOL FOR X AND Z
CONCENTRIC STRANDED	SOLID	
•14,•16	•12,•14	8
•10,•12	•8,•10	6
•8	•6	4
•6	•4	3

EXAMPLE

IF THE LINE OUTSIDE DIAMETER W IS .42" AND THE CONDUCTOR X IS NO. 6 STRANDED, AND THE LOAD SIDE OUTSIDE DIAMETER Y IS .29" AND THE CONDUCTOR Z IS NO. 12 STRANDED, THE KIT REQUIRED WILL BE VI-D3-C6.

TYPE 6

FUSED IN-LINE CONNECTOR KIT
FOR JUNCTION BOX INSTALLATION

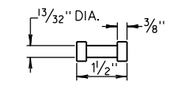

ANY STANDARD MIDGET, FERRULE TYPE FUSE, (EXCEPT GLASS TUBE) MAY BE USED IN THIS CONNECTOR.
FUSES RATED 600 VOLTS AND 30 AMPERES, MINIMUM SHALL BE USED UNLESS OTHERWISE SPECIFIED.

MIDGET TYPE FUSE

NOTE:
ALL CONNECTOR KITS SHALL BE HEAVY DUTY AND WATERPROOF, WITH A LIFETIME WARRANTY, AND SHALL BE INSTALLED PER MANUFACTURER'S RECOMMENDATIONS.

* WHEREVER JUNCTION BOXES ARE USED FOR WIRE PULLING PURPOSES ONLY.

WEST VIRGINIA DEPARTMENT OF TRANSPORTATION
DIVISION OF HIGHWAYS
STANDARD DETAIL

PREPARED: 8/2018
REVISION DATE

ELECTRICAL CABLE CONNECTOR KITS TYPES 1 - 6

STANDARD SHEET TEL-09A

12/19/2018

Z:\Projects\WV001\Standard Details vol II\New_Sheets\Lighting\TEL-09A.dgn

J04C02C03-STDBOR c

TRAFFIC ENGINEERING DIVISION

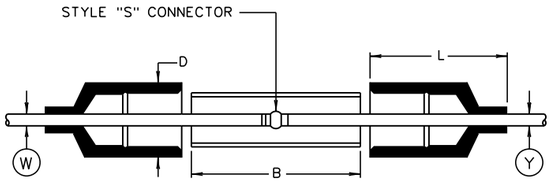

TYPE 7A
STRAIGHT LINE SPsplice

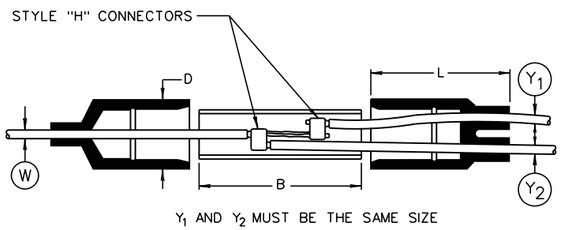

TYPE 7B
TWO-WAY SPLICE

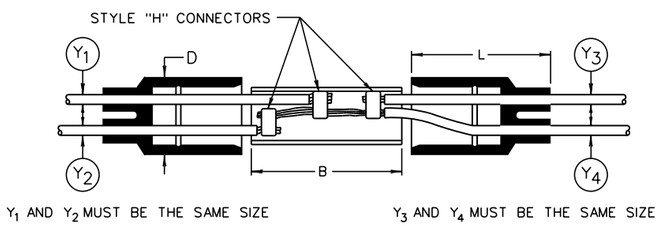

TYPE 7C
THREE-WAY SPLICE

TABLE OF NOMINAL TYPE 7 KIT
STYLE VARIATIONS REQUIRED

B	D	L	CABLE DIAMETER MIN.	CABLE DIAMETER MAX.	AWG 600V CABLE
3" AND 7"	1 29/32"	4 1/16"	.320"	.430"	#6 AND #4
	"	"	.420"	.585"	#2 AND #2/0
	"	"	.575"	.785"	#3/0-250MCM *
	"	"	.775"	.985"	200MCM-400MCM
	"	4 3/16"	.975"	1.185"	500MCM
	"	4 5/16"	1.175"	1.385"	600MCM-750MCM

* MAXIMUM "Y" CABLE SIZE. SEE CATALOGS OR DESIGN DRAWINGS FOR SPECIFIC KIT SYMBOLIZATION REQUIRED IN EACH APPLICATION.

TYPE 7

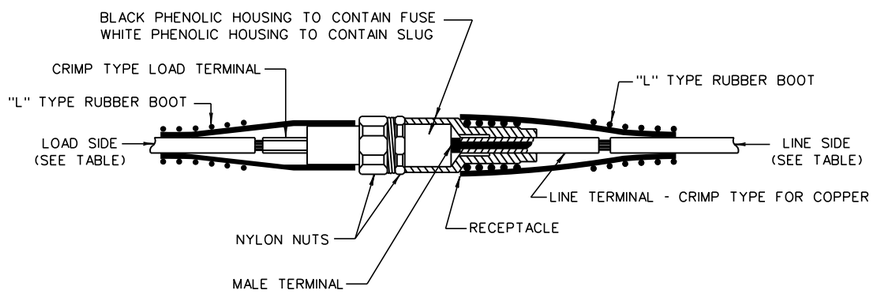

TYPE 8
"CU" - IN-LINE COPPER

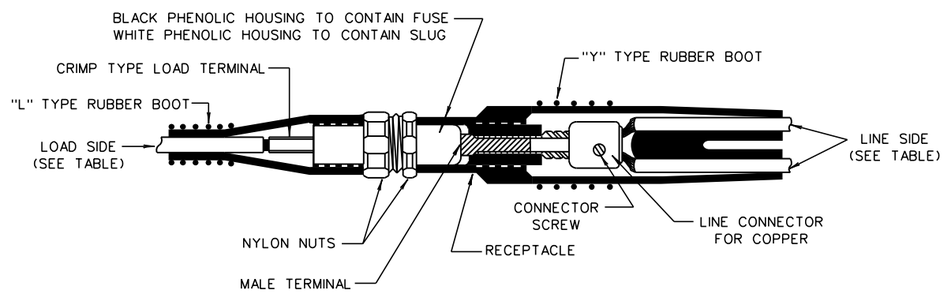

TYPE 9
"CU" - T-TAP COPPER

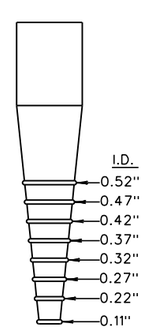

"L" TYPE RUBBER BOOT

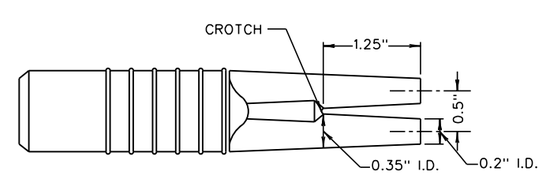

"Y" TYPE RUBBER BOOT

NOTES:

1. STYLE "S" CONNECTORS SHALL BE THE SPLICING SLEEVE TYPE CONSISTING OF A CRIMPABLE PLATED COPPER SLEEVE WITH A THIN METAL WALL ("STOP") IN THE BARREL CENTERED BETWEEN EACH SLEEVE END IN SUCH A MANNER THAT THE SLEEVE SHALL ENCLOSE EQUAL LENGTHS OF THE TWO CONDUCTORS BEING SPLICED END TO END. THE BARREL OF THE SLEEVE WILL FIT SPECIFIC RANGES OF CONDUCTOR SIZES. THE MANUFACTURER'S INSTRUCTIONS RELATING THERETO SHALL BE STRICTLY FOLLOWED.

2. STYLE "H" CONNECTORS SHALL BE THE PARALLEL GROOVE CONNECTOR CONSISTING OF A METAL BODY HAVING TWO FULLY-OPENED GROOVES OR SLOTS PARALLEL TO EACH OTHER, AND SEPARATED BY A PORTION OF THE CENTER SECTION OF THE BODY. THE TOTAL CIRCUMFERENCE OF EACH CONDUCTOR SHALL BE COMPLETELY SURROUNDED BY METAL WHEN THE CONNECTOR IS DEPRESSED.

3. THE FUSEHOLDER SHALL BE CAPABLE OF RETAINING A 13•32INCH DIAMETER BY 1 1/2 INCH LONG FUSE RATED AT 600 VOLT AND A MINIMUM OF 30 AMPERES.

4. THE "Y" TYPE BOOT SHALL NOT BE CUT BEYOND THE CROTCH WHERE THE INSIDE DIAMETER OF EACH LEG IS 0.35". USE OF A CABLE OF 0.48" O.D. IN THE "Y" TYPE BOOT MAY REQUIRE THE APPLICATION OF A LUBRICATING COMPOUND ON THE CABLE INSULATION FOR IT TO SLIDE INTO THE BOOT.

5. IF THE CABLE HAS A NYLON JACKET, THE JACKET SHALL BE PEELED BACK TO A POINT WHERE NO PART OF THE JACKET IS ENCASED IN THE BOOT OF THE INSULATED CABLE.

6. ALL CONNECTOR KITS SHALL BE HEAVY DUTY AND WATERPROOF, WITH A LIFETIME WARRANTY, AND SHALL BE INSTALLED PER MANUFACTURER'S RECOMMENDATIONS.

WEST VIRGINIA DEPARTMENT OF TRANSPORTATION
DIVISION OF HIGHWAYS
STANDARD DETAIL

PREPARED: 8/2018
REVISION DATE

ELECTRICAL CABLE CONNECTOR KITS TYPES 7 - 9

STANDARD SHEET TEL-09B

TRAFFIC ENGINEERING DIVISION

12/19/2018

Z:\Projects\WVDOT\Standard Details vol II\New_Sheets\Lighting\TEL-09B.dgn

J04C02C03-STDBOR c

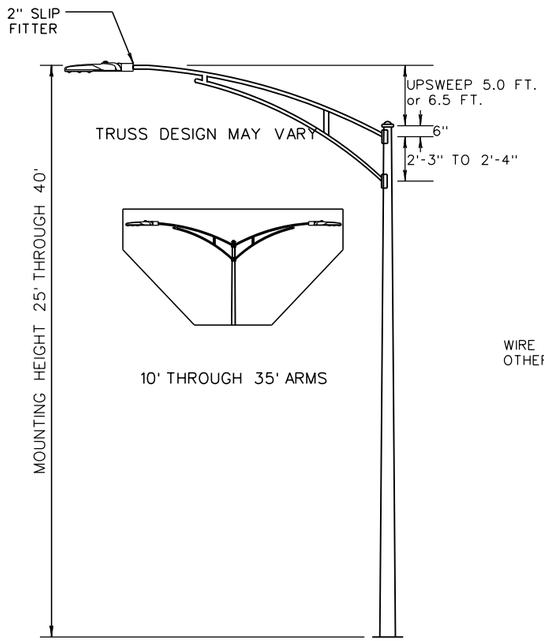

TYPE I LIGHT POLE

MOUNTING HEIGHT IS 25' TO 40'

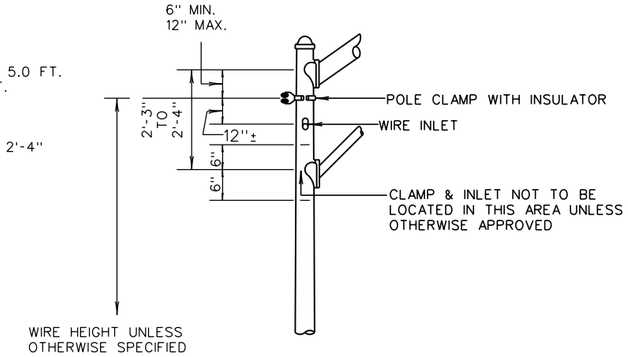

OVERHEAD WIRE ENTRANCE

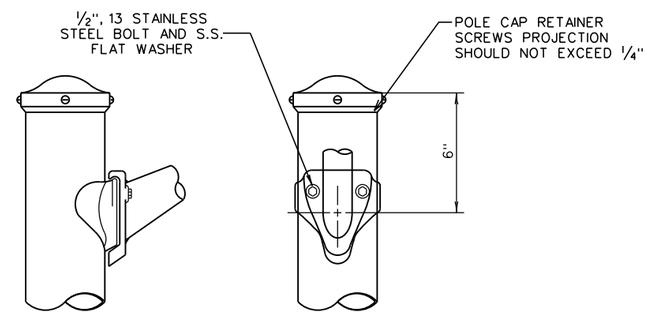

TWO BOLT ARM ATTACHMENT

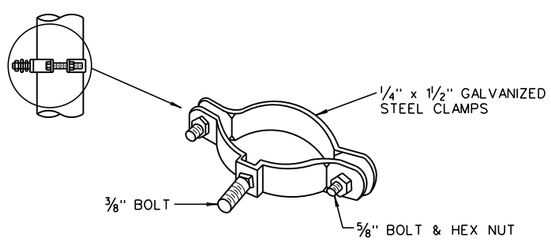

CLAMP FOR OVERHEAD WIRING

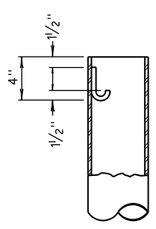

"J" HOOK DETAIL

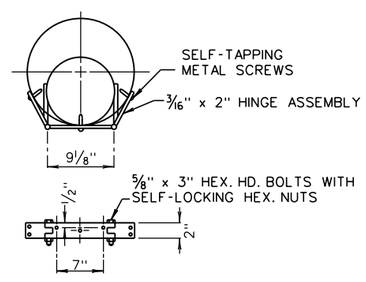

CABINET MOUNTING BRACKET

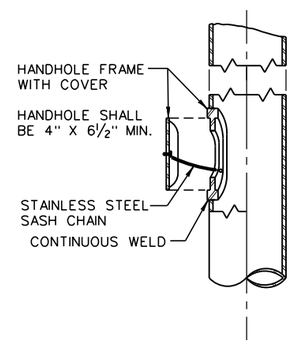

HANDHOLE DETAIL

NOTES

1. POLE:
   - A. EACH POLE SHALL BE COMPLETE WITH ONE POLE CAP, J-HOOK, AND A HAND HOLE. POLES ON BRIDGES SHALL ALSO INCLUDE INTERNAL VIBRATION DAMPERS.
   - B. SEE TEL-15B FOR FOUNDATION DETAILS.
   - C. FOR BASES, SEE CONTRACT PLANS AND/OR TEL-18 OR TEL-19.
   - D. POLE SIZING TO BE IN ACCORDANCE WITH THE AASHTO STANDARD SPECIFICATIONS FOR STRUCTURAL SUPPORTS FOR HIGHWAY SIGNS, LUMINAIRES, AND TRAFFIC SIGNALS, 6TH EDITION, 2013 USING 90 MPH WIND SPEED AND FATIGUE CATEGORY I.
2. CONDUIT : (FOR CABINET MOUNTING AND/OR POSSIBLE POWER SERVICE)
   - A. CONDUIT SHALL BE FASTENED TO THE POLE WITH CONDUIT CLAMPS, 4 FEET C.C.
   - B. CONDUIT CLAMPS SHALL BE FASTENED TO THE POLE WITH SELF-TAPPING SCREWS.
3. CABINET MOUNTING BRACKET:
   - A. WHEN CABINET OR CABINETS ARE TO BE MOUNTED ON A POLE, THE POLE SHALL BE COMPLETE WITH TWO BRACKETS PER CABINET.
   - B. THE HEIGHT OF THE CABINET IS SPECIFIED ON THE CONTRACT PLANS.
   - C. CONTRACTOR SHALL FIELD DRILL THE HOLES FOR THE SELF-TAPPING SCREWS AFTER THE FINAL POSITION HAS BEEN DETERMINED.
4. HAND HOLES:
   - A. THE HAND HOLE IN THE BASE SHALL BE A MINIMUM SIZE OF 4 IN. x 6 1/2 IN. MIN.
   - B. THE HAND HOLE SHALL BE LOCATED 90° FROM BRACKET ARM (DOWNSTREAM).
   - C. SCREWS SHALL BE VANDAL RESISTANT WITH STYLE PRIOR-APPROVED BY THE WVDOH, DIVISION OF TRAFFIC.
5. BRACKET ARM:
   - A. BRACKET ARM SHALL BE EQUIPPED WITH A 2 IN. SLIP FIT TYPE CONNECTION FOR THE LUMINAIRE.
   - B. BRACKET ARM CONNECTION SHALL BE THE TYPE SHOWN AND SHALL BE OF SUFFICIENT STRENGTH SO THAT THE BRACKET WILL FAIL BEFORE THE CONNECTION.
   - C. CLAMP ON ARMS ARE NOT ALLOWED.
6. WELDING:
   - A. CONNECTION SHALL BE DESIGNED FOR THE LOAD ON THE MEMBERS.

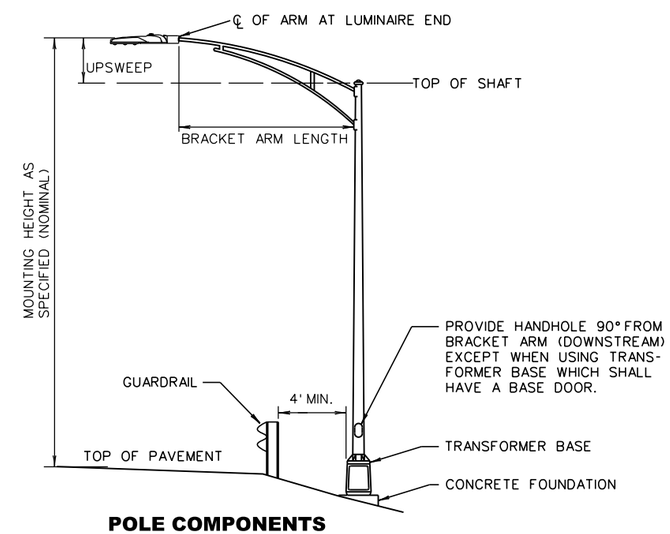

POLE COMPONENTS

WEST VIRGINIA DEPARTMENT OF TRANSPORTATION
DIVISION OF HIGHWAYS
STANDARD DETAIL

PREPARED: 8/2018
REVISION DATE

STEEL LIGHTING POLE DETAILS TYPE I

STANDARD SHEET TEL-11

TRAFFIC ENGINEERING DIVISION

12/19/2018

Z:\Projects\WVDOT\Standard Details vol II\New_Sheets\Lighting\TEL-11.dgn

J04C02C03-STDBOR c

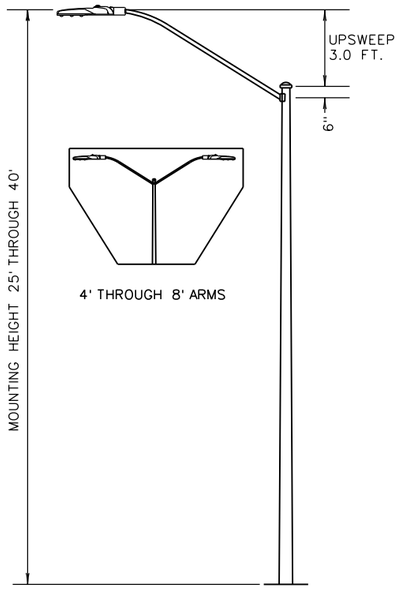

TYPE II LIGHT POLE

MOUNTING HEIGHT IS
25' TO 40'

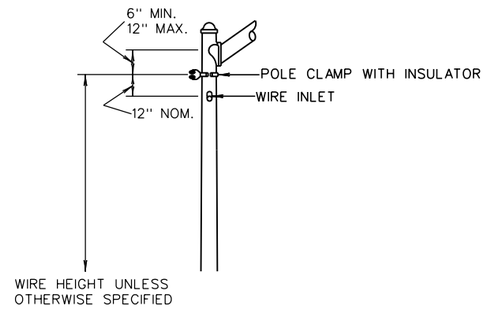

OVERHEAD WIRE ENTRANCE

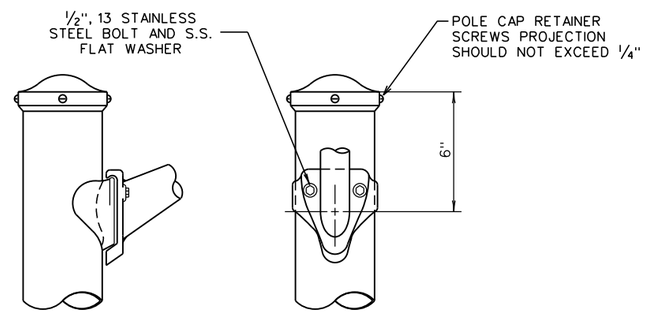

TWO BOLT ARM ATTACHMENT

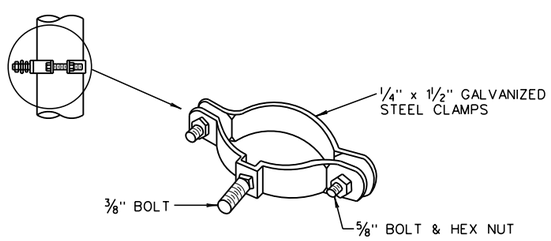

CLAMP FOR OVERHEAD WIRING

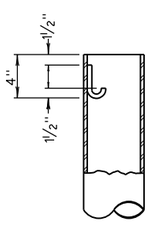

"J" HOOK DETAIL

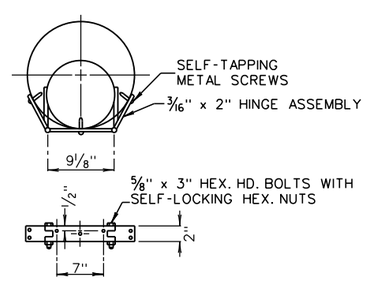

CABINET MOUNTING BRACKET

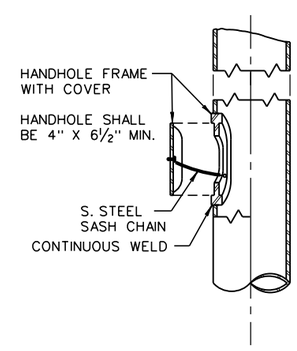

HANDHOLE DETAIL

NOTES

1. POLE:
   - A. EACH POLE SHALL BE COMPLETE WITH ONE POLE CAP, J-HOOK, AND A HAND HOLE. POLES ON BRIDGES SHALL ALSO INCLUDE INTERNAL VIBRATION DAMPERS.
   - B. SEE TEL-15B FOR FOUNDATION DETAILS.
   - C. FOR BASES, SEE CONTRACT PLANS AND/OR TEL-18 OR TEL-19.
   - D. POLE SIZING TO BE IN ACCORDANCE WITH THE AASHTO STANDARD SPECIFICATIONS FOR STRUCTURAL SUPPORTS FOR HIGHWAY SIGNS, LUMINAIRES, AND TRAFFIC SIGNALS, 6TH EDITION, 2013 USING 90 MPH WIND SPEED AND FATIGUE CATEGORY I.
2. CONDUIT: (FOR CABINET MOUNTING AND/OR POSSIBLE POWER SERVICE)
   - A. CONDUIT SHALL BE FASTENED TO THE POLE WITH CONDUIT CLAMPS, 4 FEET C.C.
   - B. CONDUIT CLAMPS SHALL BE FASTENED TO THE POLE WITH SELF-TAPPING SCREWS.
3. CABINET MOUNTING BRACKET:
   - A. WHEN CABINET OR CABINETS ARE TO BE MOUNTED ON A POLE, THE POLE SHALL BE COMPLETE WITH TWO BRACKETS PER CABINET.
   - B. THE HEIGHT OF THE CABINET IS SPECIFIED ON THE CONTRACT PLANS.
   - C. CONTRACTOR SHALL FIELD DRILL THE HOLES FOR THE SELF-TAPPING SCREWS AFTER THE FINAL POSITION HAS BEEN DETERMINED.
4. HAND HOLES:
   - A. THE HAND HOLE IN THE BASE SHALL BE A MINIMUM SIZE OF 4 IN. x 6 1/2 IN.
   - B. THE HAND HOLE SHALL BE LOCATED 90° FROM BRACKET ARM (DOWNSTREAM).
   - C. SCREWS SHALL BE VANDAL RESISTANT WITH STYLE PRIOR-APPROVED BY THE WVDOH, TRAFFIC ENGINEERING DIVISION.
5. BRACKET ARM:
   - A. BRACKET ARM SHALL BE EQUIPPED WITH A 2 IN. SLIP FIT TYPE CONNECTION FOR THE LUMINAIRE.
   - B. BRACKET ARM CONNECTION SHALL BE THE TYPE SHOWN AND SHALL BE OF SUFFICIENT STRENGTH SO THAT THE BRACKET WILL FAIL BEFORE THE CONNECTION.
   - C. CLAMP ON ARMS ARE NOT ALLOWED.
6. WELDING:
   - A. CONNECTION SHALL BE DESIGNED FOR THE LOAD ON THE MEMBERS.

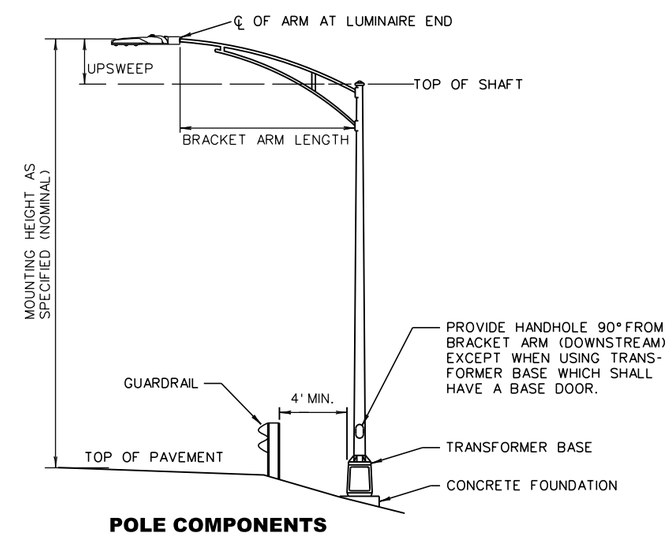

POLE COMPONENTS

WEST VIRGINIA DEPARTMENT OF TRANSPORTATION
DIVISION OF HIGHWAYS
STANDARD DETAIL

PREPARED: 8/2018
REVISION DATE

STEEL
LIGHTING POLE DETAILS
TYPE II

STANDARD SHEET TEL-12

TRAFFIC ENGINEERING DIVISION

12/9/2018

Z:\Projects\WVDOT\Standard Details vol II\New_Sheets\Lighting\TEL-12.dgn

J04C02C03-STDBOR c

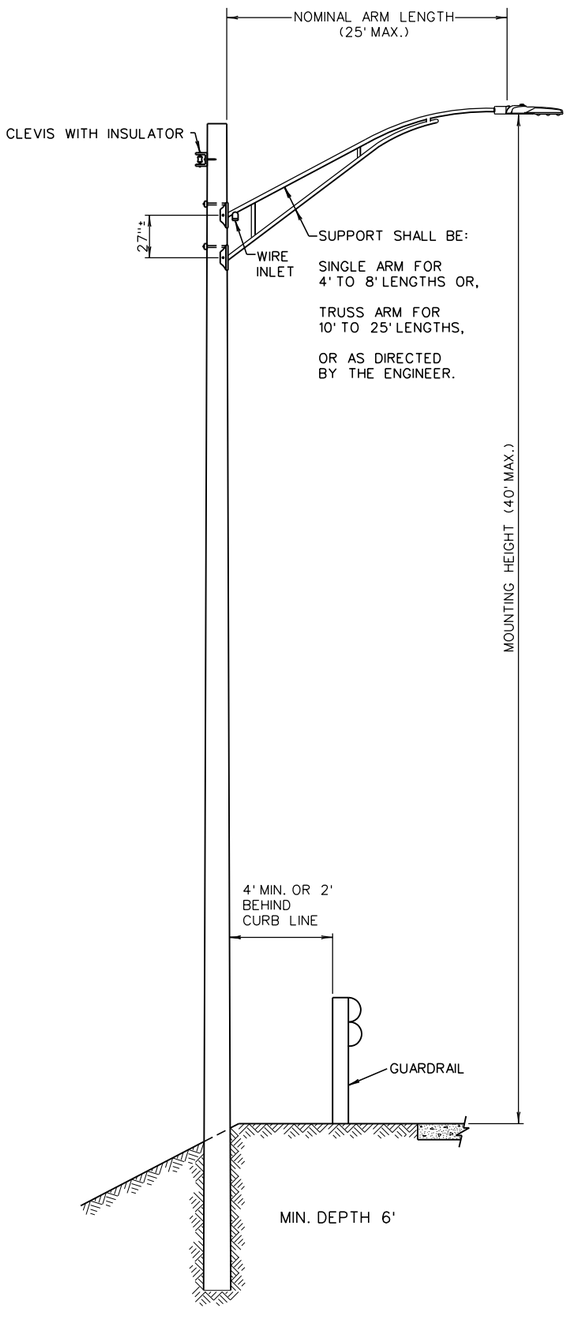

TYPE IV LIGHT POLE

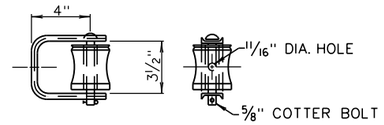

CLEVIS DETAIL WITH INSULATOR

THREE BOLT CABLE CLAMP

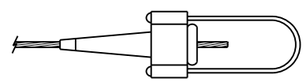

CABLE STRANDVISE

EYE BOLT WITH CURVED WASHERS AND NUTS FOR WOOD POLES

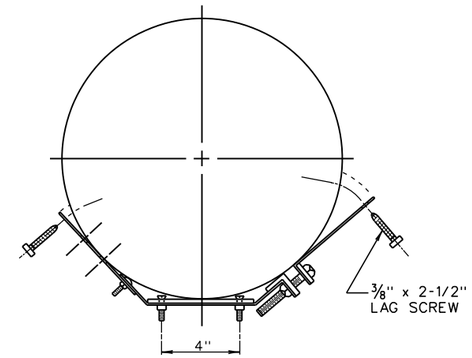

MOUNTING BRACKET FOR CABINETS

NOTES

1. POLE
   A. POLE CLASS SHALL BE PER WVDOT STD SPEC 710.8.1.
   B. POLE EMBEDMENT SHALL BE AT A 6 FT. MIN. DEPTH.
2. MAST ARM
   A. THE ATTACHMENT SHALL BE CONSTRUCTED SO THAT IT TRANSFERS THE FULL STRENGTH OF THE ARM TO THE POLE SHAFT.
3. CONDUIT
   A. CONDUIT SHALL BE FASTENED TO THE POLE WITH CONDUIT CLAMPS, 4 FEET C.C.
   B. CONDUIT CLAMPS SHALL BE FASTENED TO THE POLE WITH LAG SCREWS.
4. GUY SUPPORT
   A. GUY SUPPORT SHALL BE PROVIDED BY THE CONTRACTOR IF CALLED FOR ON THE PLANS AND AS NEEDED.
5. GROUNDING
   A. IF EQUIPMENT GROUNDS ARE NOT PROVIDED IN THE SERVICE, EACH POLE WILL BE GROUNDED.

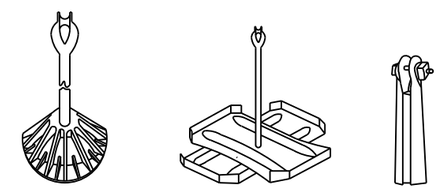

CONE **CROSS-PLATE** **ROCK**

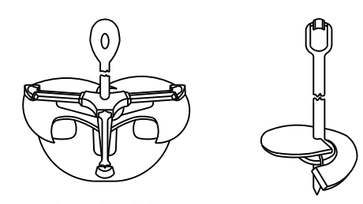

EXPANDING **SCREW**

GUY ANCHORS

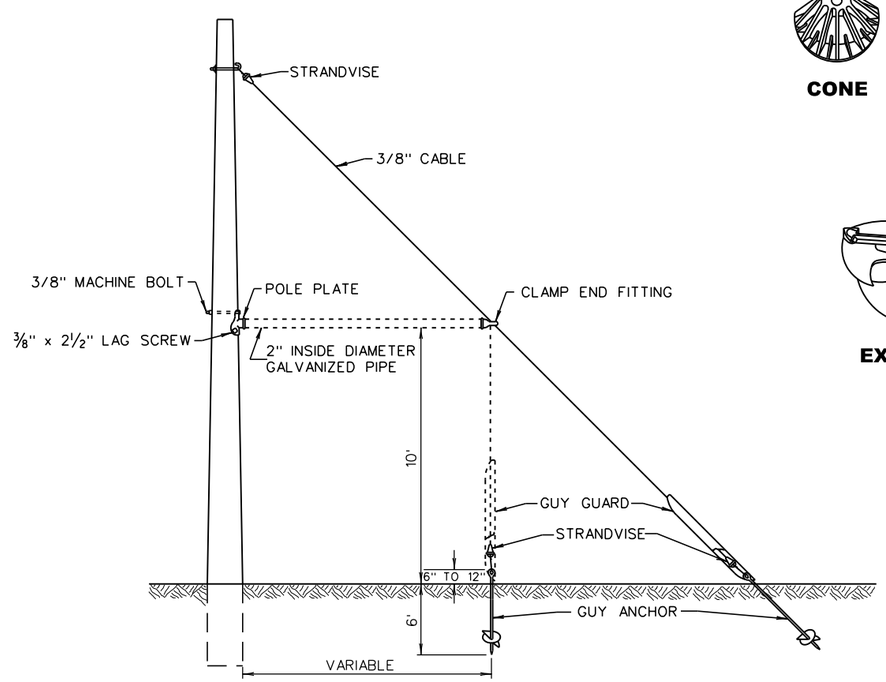

POLE GUYING METHODS

WEST VIRGINIA DEPARTMENT OF TRANSPORTATION
DIVISION OF HIGHWAYS
STANDARD DETAIL

PREPARED: 8/2018
REVISION DATE

WOOD LIGHTING POLE DETAILS TYPE IV

STANDARD SHEET TEL-14

TRAFFIC ENGINEERING DIVISION

J04C02C03-STDBOR c

12/19/2018

Z:\Projects\WVDOT\Standard Details vol II\New_Sheets\Lighting\TEL-14.dgn

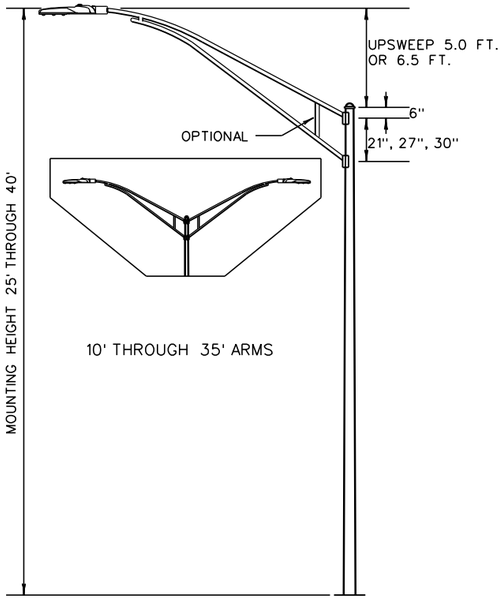

TYPE V LIGHT POLE

TRUSS ARM

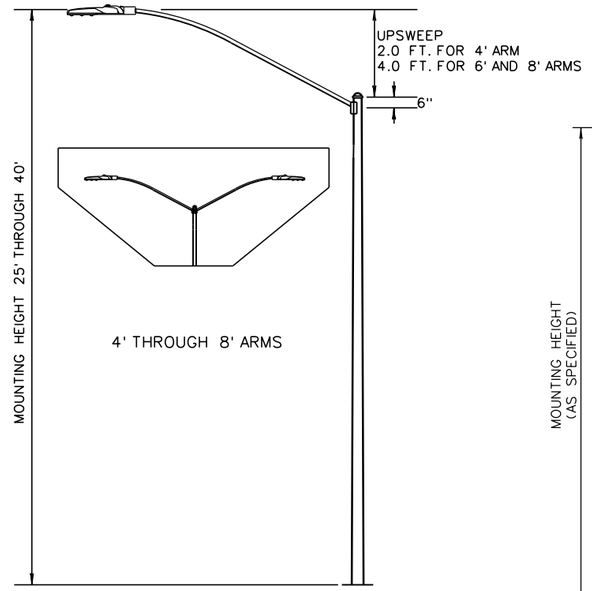

TYPE VI LIGHT POLE

SINGLE ARM

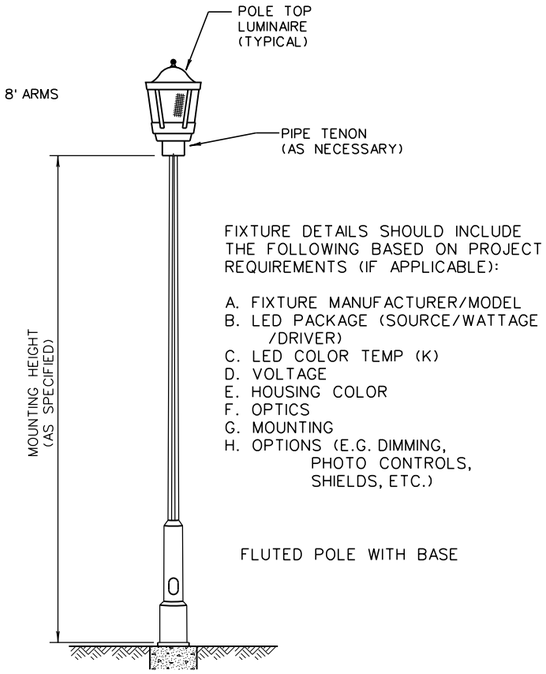

TYPE VII LIGHT POLE

NOTES

1. POLE:
   - A. EACH POLE SHALL BE COMPLETE WITH ONE POLE CAP, J-HOOK, AND A HAND HOLE. POLES ON BRIDGES SHALL ALSO INCLUDE INTERNAL VIBRATION DAMPERS.
   - B. SEE TEL-15B FOR FOUNDATION DETAILS.
   - C. FOR BREAKAWAY BASES, SEE CONTRACT PLANS AND/OR TEL-18.
   - D. POLE SIZING TO BE IN ACCORDANCE WITH THE AASHTO STANDARD SPECIFICATIONS FOR STRUCTURAL SUPPORTS FOR HIGHWAY SIGNS, LUMINAIRES, AND TRAFFIC SIGNALS, 6TH EDITION, 2013 USING 90 MPH WIND SPEED AND FATIGUE CATEGORY I.
2. CONDUIT : (FOR CABINET MOUNTING AND/OR POSSIBLE POWER SERVICE)
   - A. CONDUIT SHALL BE FASTENED TO THE POLE WITH CONDUIT CLAMPS, 4 FEET C.C.
   - B. CONDUIT CLAMPS SHALL BE FASTENED TO THE POLE WITH SELF-TAPPING SCREWS.
3. CABINET MOUNTING BRACKET:
   - A. WHEN CABINET OR CABINETS ARE TO BE MOUNTED ON A POLE, THE POLE SHALL BE COMPLETE WITH TWO BRACKETS PER CABINET.
   - B. THE HEIGHT OF THE CABINET IS SPECIFIED ON THE CONTRACT PLANS.
   - C. CONTRACTOR SHALL FIELD DRILL THE HOLES FOR THE SELF-TAPPING SCREWS AFTER THE FINAL POSITION HAS BEEN DETERMINED.
4. HAND HOLES:
   - A. THE HAND HOLE IN THE BASE SHALL BE A MINIMUM SIZE OF 4 IN. x 6 IN. FOR TYPE V AND VI POLES. FOR TYPE VII POLES SEE CONTRACT PLANS.
   - B. THE HAND HOLE FOR TYPE V AND VI POLES SHALL BE LOCATED 90° FROM BRACKET ARM (DOWNSTREAM).
   - C. THE HAND HOLE FOR TYPE VII POLES SHALL BE LOCATED DOWNSTREAM.
   - D. SCREWS SHALL BE VANDAL RESISTANT WITH THE STYLE PRIOR-APPROVED BY THE WVDOH, TRAFFIC ENGINEERING DIVISION.
5. BRACKET ARM:
   - A. THE ARM FOR TYPE V AND VI POLES SHALL BE ATTACHED TO THE POLE SO THAT IT CAN TRANSFER THE FULL STRENGTH OF THE ARM TO THE POLE SHAFT.
   - B. BRACKET ARM SHALL BE EQUIPPED WITH A 2 IN. SLIP FIT TYPE CONNECTION FOR THE LUMINAIRE.
6. WELDING:
   - A. CONNECTION SHALL BE DESIGNED FOR THE LOAD ON THE MEMBERS.

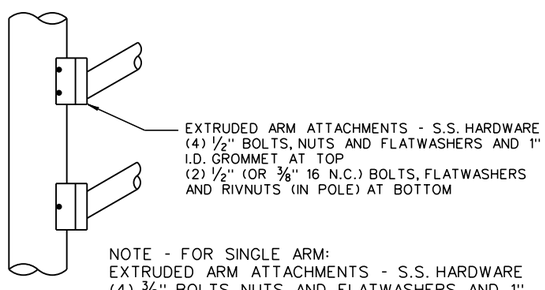

NOTE - FOR SINGLE ARM:
EXTRUDED ARM ATTACHMENTS - S.S. HARDWARE
(4) 3/8" BOLTS, NUTS, AND FLATWASHERS AND 1"
I.D. GROMMET OR 1/2" ALUM. HARDWARE AS APPROVED
BY THE ENGINEER.

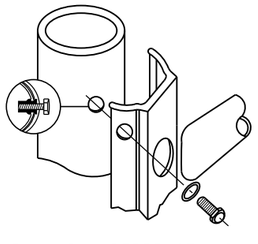

MAIN ARM AND UNDERBRACE (AS APPLICABLE) IS WELDED TO AN EXTRUDED MOUNTING PLATE OF ALLOY 6061 - T6. THE TRUSS ARM(S) IS ASSEMBLED TO THE SHAFT BY MEANS OF FOUR, SIX OR EIGHT RIVNUTS OR S.S. HEX. HEAD BOLTS, DEPENDING ON LENGTH.

MOUNTING PLATE TYPE

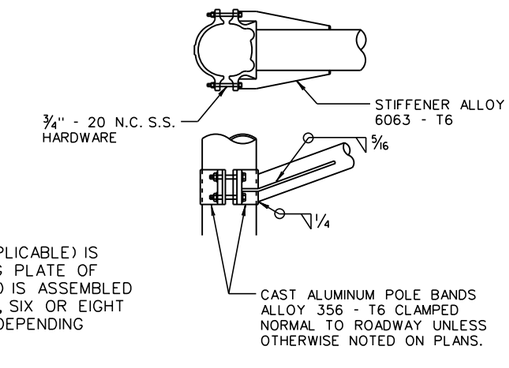

BAND TYPE

ARM ATTACHMENT OPTIONS
TYPES V AND VI

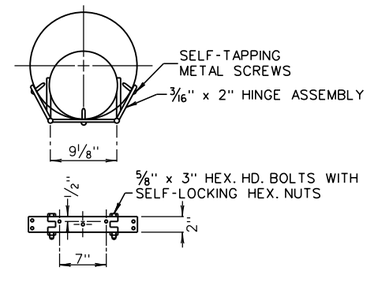

CABINET
MOUNTING BRACKET

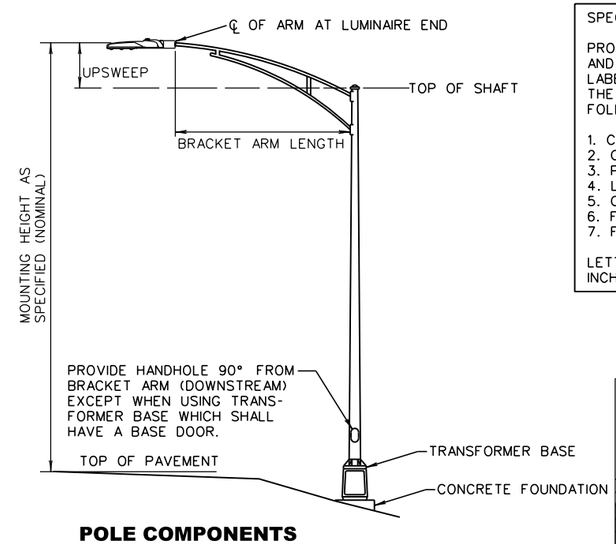

POLE COMPONENTS
TYPE V AND VI

SPECIAL NOTE:

PROVIDE A STICKER OR TAG DESCRIBING EACH POLE AND FIXTURE. AFFIX A LAMINATED, PLASTIC, PRINTED, LABEL OR ENGRAVED METAL TAG ON THE INSIDE OF THE HANDHOLE COVER (OFF THE GROUND) WITH THE FOLLOWING INFORMATION:

1. CONTROL STATION NUMBER
2. CIRCUIT NUMBER
3. POLE NUMBER
4. LUMINAIRE NUMBER
5. CIRCUIT VOLTAGE
6. FIXTURE WATTAGE
7. FIXTURE OPTIC

LETTERING SHALL BE NO SMALLER THAN A QUARTER INCH TALL.

WEST VIRGINIA DEPARTMENT OF TRANSPORTATION
DIVISION OF HIGHWAYS
STANDARD DETAIL

PREPARED: 8/2018
REVISION DATE

ALUMINUM
LIGHTING POLE DETAILS
TYPE V, VI AND VII

STANDARD SHEET TEL-15A

TRAFFIC ENGINEERING DIVISION

J04C02C03-STDBDR c
Z:\Projects\WVDOT\Standard Details vol II\New_Sheets\Lighting\TEL-15A.dgn
12/19/2018

POLE AND ARM SIZE *			FOUNDATION			ANCHORAGE		REINFORCING STEEL	
POLE TYPE	POLE HEIGHT	ARM LENGTH	DIAMETER OR SIDE (FT)	DEPTH (FT)	VOLUME (C.Y.)	B.C.	A.B.	NO. OF BARS	SIZE OF BARS
I, II, V, VI	25 FT TO 40 FT	UP TO 15 FT	2.0	6.0	0.73	15	1	6	5
I, II, V, VI	25 FT TO 40 FT	>15 FT TO 35 FT	2.5	8.0	1.51	15	1 1/4	6	5
VII	UP TO 25 FT	UP TO 1 FT	2.0	5.0	0.62	15	1	6	5

* RATED PER AASHTO SPECIFICATIONS FOR 90 MPH WITH 1.3 GUSTS

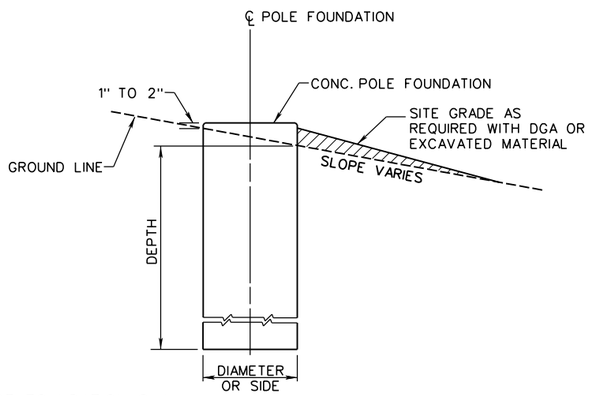

NOTE:
TOP OF FOUNDATION SHALL BE 1" TO 2" ABOVE GROUND ON UPHILL SIDE.

FOUNDATION IN SLOPE

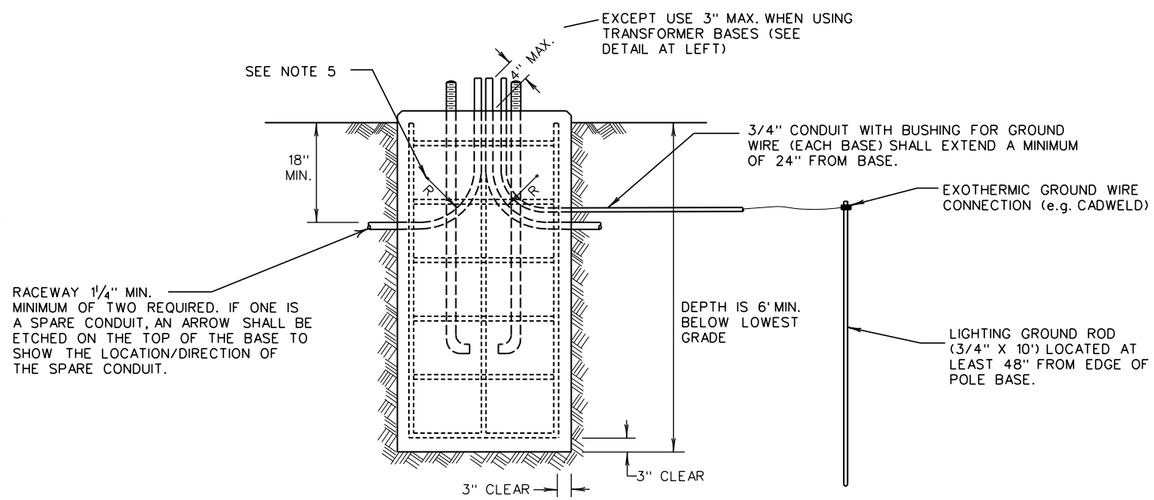

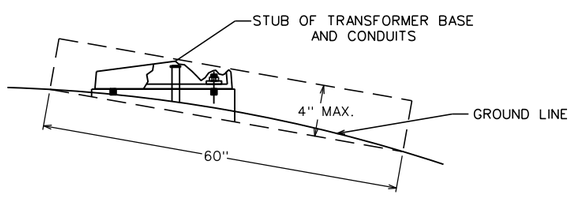

THE ANCHOR BOLTS AND CONDUITS SHALL NOT BE PROJECTED MORE THAN 4 INCHES ABOVE A GROUND LINE BETWEEN THE STRADDLING WHEELS OF A VEHICLE.

BREAKAWAY SUPPORT STUB HEIGHT MEASUREMENT

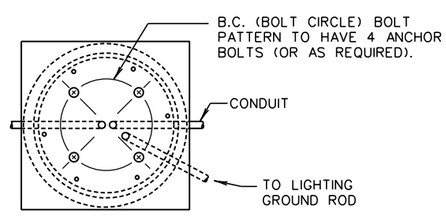

FOUNDATION DETAIL (TYPICAL)

GENERAL NOTES

1. CONCRETE:
   - A. ALL EXPOSED CONCRETE SHALL HAVE A NORMAL FINISH.
   - B. ALL OUTSIDE CONCRETE CORNERS AND EDGES SHALL HAVE A 3/4 INCH CHAMFER.
   - C. CONCRETE TO BE RODDED OR VIBRATED WHILE POURING.
   - D. ALL CONCRETE SHALL BE CLASS B.
2. STEEL:
   - A. REINFORCING STEEL SHALL NOT BE CLOSER THAN 3 INCHES TO THE OUTSIDE SURFACE OF THE FOOTING AND SHALL BE TIED.
   - B. VERTICAL BARS SHALL BE TIED WITH #4 HOOP BARS AT 1 FT. ON CENTER. THE #4 HOOP BARS SHALL HAVE A 1 FT. MINIMUM LAP.
3. FOOTINGS:
   - A. ALL FOOTING IN SIDEWALKS SHALL BE FINISHED FLUSH WITH THE EXISTING SIDEWALKS, UNLESS OTHERWISE SPECIFIED BY THE PROJECT ENGINEER.
   - B. FOOTINGS MAY BE EITHER CIRCULAR OR SQUARE IN CROSS-SECTION. CIRCULAR FOOTINGS SHALL BE SQUARE FOR THE TOP 12 INCHES.
   - C. WITH PERMISSION OF THE PROJECT ENGINEER, THE DEPTH OF THE FOOTING MAY BE REDUCED ONE (1) FOOT WHEN THE FOOTING IS PLACED IN A CONCRETE OR ASPHALTIC CONCRETE SIDEWALK OR PAVED SURFACE. THE FOOTINGS MAY BE REDUCED BY ONE (1) FOOT WHEN THE FOOTING IS IN ROCK.
4. FORMS:
   - A. NO FORMS MAY EXTEND TO A DEPTH GREATER THAN 12 INCHES UNLESS APPROVAL IS GRANTED BY THE PROJECT ENGINEER.
5. CONDUIT:
   - A. THE RADIUS (R) OF THE CURVE OF THE INNER EDGE OF ANY BEND SHALL NOT BE LESS THAN THE SIZE SPECIFIED IN THE N.E.C.
6. GROUNDING:
   - A. THE CONTRACTOR IS TO ENGAGE A QUALIFIED TESTING AND INSPECTION AGENCY TO PERFORM FIELD TESTS AND INSPECTIONS.
   - B. AFTER INSTALLING GROUNDING SYSTEM BUT BEFORE PERMANENT ELECTRICAL CIRCUITS HAVE BEEN ENERGIZED, TEST FOR COMPLIANCE WITH THE FOLLOWING REQUIREMENTS:
     - I. TEST COMPLETED GROUNDING SYSTEM AT EACH POLE AND AT SERVICE DISCONNECT ENCLOSURE.
     - II. MEASURE GROUND RESISTANCE NOT LESS THAN TWO FULL DAYS AFTER THE LAST TRACE OF PRECIPITATION AND WITHOUT SOIL BEING MOISTENED BY ANY MEANS OTHER THAN NATURAL DRAINAGE OR SEEPAGE AND WITHOUT CHEMICAL TREATMENT OR OTHER ARTIFICIAL MEANS OF REDUCING NATURAL GROUND RESISTANCE.
     - III. PERFORM THE TEST BY THE FALL-OF-POTENTIAL METHOD ACCORDING TO IEEE STANDARD 81.
   - C. INSTALL ADDITIONAL GROUND RODS AS REQUIRED UNTIL MEASURED GROUND RESISTANCE IS 5 OHMS OR LESS.
   - D. GROUND RODS ARE TO BE DRIVEN TO A DEPTH OF 2 INCHES BELOW FINISHED GRADE TO TOP OF ROD AND SEPARATED BY A MINIMUM DISTANCE OF 8 FEET.
   - E. INTERCONNECT GROUND RODS WITH A #2 AWG BARE, STRANDED COPPER CONDUCTOR BURIED AT 18 INCHES BELOW GRADE.

WEST VIRGINIA DEPARTMENT OF TRANSPORTATION
DIVISION OF HIGHWAYS
STANDARD DETAIL

PREPARED: 8/2018
REVISION DATE

LIGHTING POLE FOUNDATION DETAILS

TYPES I, II, V, VI, AND VII

STANDARD SHEET TEL-15B

TRAFFIC ENGINEERING DIVISION

J04C02C03-STDBDR c
12/19/2018
Z:\Projects\WVDOT\Standard Details vol II\New_Sheets\Lighting\TEL-15B.dgn

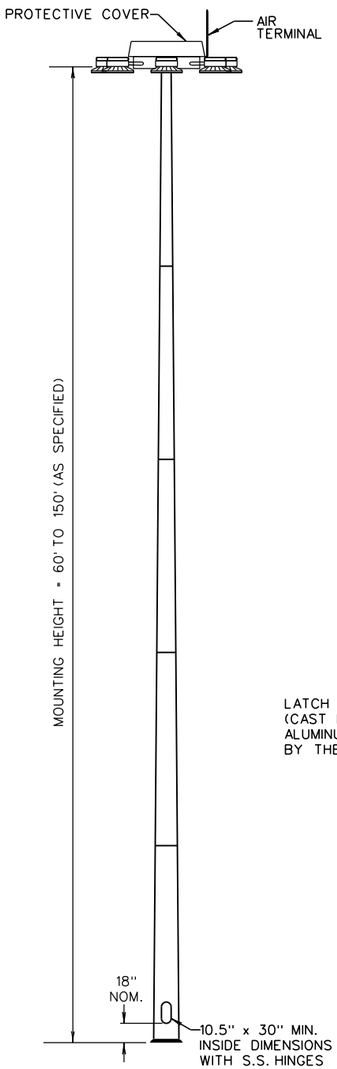

ELEVATION

TYPE X LIGHT POLE

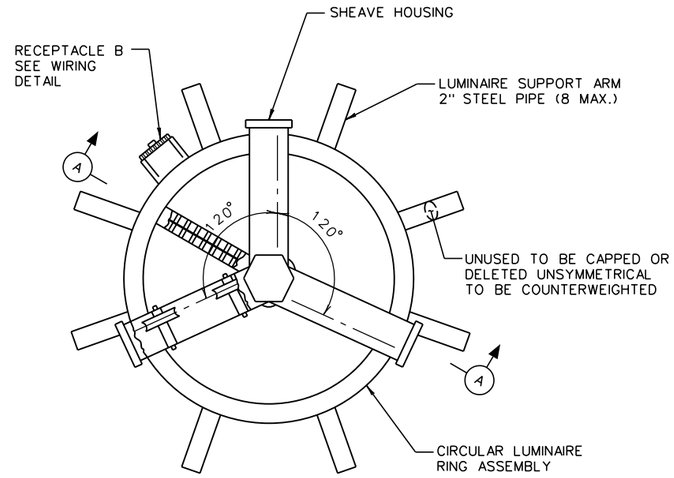

PLAN VIEW

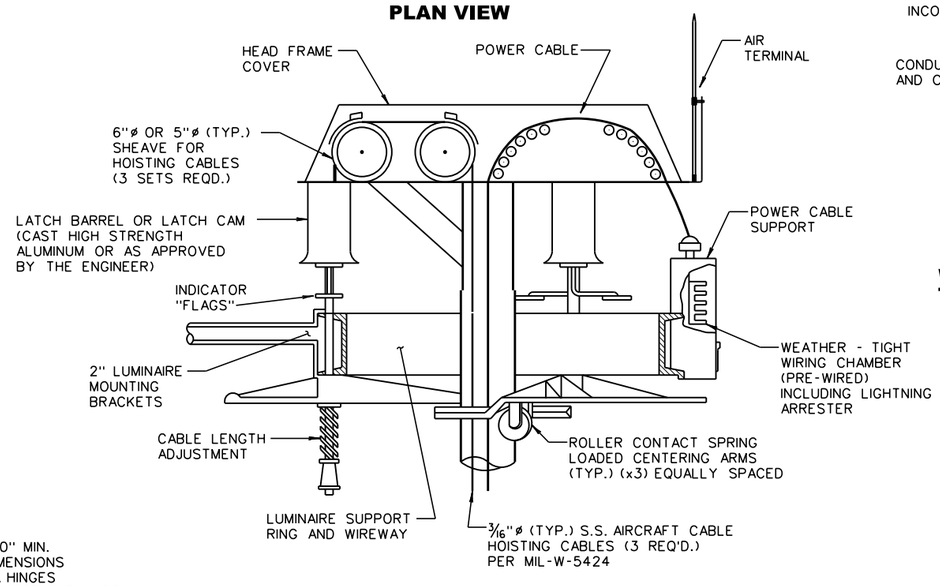

SECTION A-A

HEADFRAME AND RING ASSEMBLY DETAIL

(TOP-LATCHING)

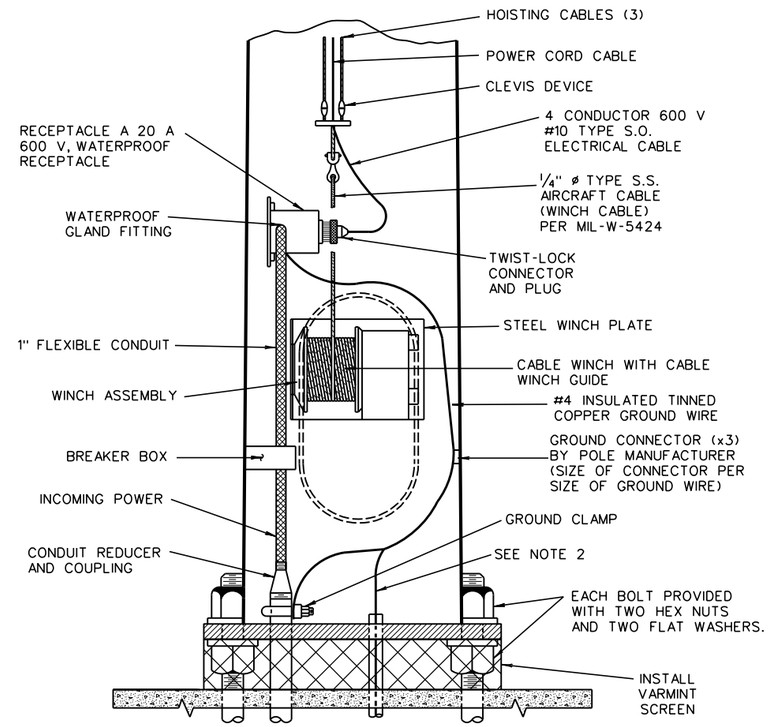

WINCH ASSEMBLY AND LOWERING DEVICE DETAIL

NOTES:

1. HIGH MAST POLE SIZING TO BE IN ACCORDANCE WITH THE AASHTO STANDARD SPECIFICATIONS FOR STRUCTURAL SUPPORTS FOR HIGHWAY SIGNS, LUMINAIRES, AND TRAFFIC SIGNALS, 6TH EDITION, 2013 USING 90 MPH WIND SPEED WITH THE FOLLOWING EXCEPTION: THE WEST VIRGINIA DEPARTMENT OF TRANSPORTATION WAIVES THE REQUIREMENTS OF CHAPTER 5, SECTION 5.14.6.2 - REINFORCED HOLES AND CUTOUTS FOR HIGH MAST LIGHTING TOWERS. THE TOWERS SHALL ALSO COMPLY WITH AASHTO FATIGUE CATEGORY I.
2. GROUND WIRE TO BE BROUGHT THROUGH FOUNDATION INSIDE OF A 3/4" METAL CONDUIT. CONDUIT SHALL BE 18" BELOW GRADE AND SHALL BE BUSHED.
3. NO. 4 TINNED BARE COPPER GROUND WIRE WITH 2' SLACK INSIDE JUNCTION BOX. THERMO WELD TO GROUND ROD IN JUNCTION BOX AND CONNECT TO GROUNDED TYPE INSULATED BUSHINGS ON ALL METAL CONDUITS IN JUNCTION BOX.
4. LIGHTNING PROTECTION - A COPPER COATED STAINLESS STEEL SPIKE NOT LESS THAN SIX INCHES IN LENGTH SHALL BE ATTACHED TO THE TOP OF THE POLE. THIS SPIKE SHALL BE CONNECTED ELECTRICALLY TO THE POLE BODY, WHICH IN TURN SHALL BE ELECTRICALLY CONNECTED TO A POSITIVE GROUND, MAXIMUM RESISTANCE OF 24 OHMS PER GROUND ROD TO GROUND.
5. HIGH MAST POLES SHALL HAVE 6 (MIN.) TO 8 (MAX.) LUMINAIRES (TYP) OR AS APPROVED BY THE ENGINEER.
6. CONTRACTOR TO FOLLOW THE PROCEDURES IN SECTION 658.1 OF THE WVDOH STANDARD SPECIFICATIONS FOR INSTALLING ANCHOR BOLTS AND ERECTION OF COLUMNS.
7. CONTRACTOR TO FOLLOW THE PROCEDURES IN SECTION 658.5.3 REGARDING THE MANDATORY USE OF A HYDRAULIC TORQUE WRENCH WHEN TIGHTENING THE ANCHOR BOLT NUTS. ENSURE MANUFACTURER PROVIDES ADEQUATE SPACE ON FLANGE BETWEEN POLE AND BOLT CIRCLE TO APPLY PROPER WRENCH TO TIGHTEN NUTS PER SPECIFICATIONS.
8. FOR EACH PROJECT, CONTRACTOR TO PROVIDE WVDOH WITH A NEW PORTABLE DRIVE MOTOR AND CORRESPONDING TRANSFORMER TO BE USED WITH THE HIGH MAST LOWERING DEVICE.

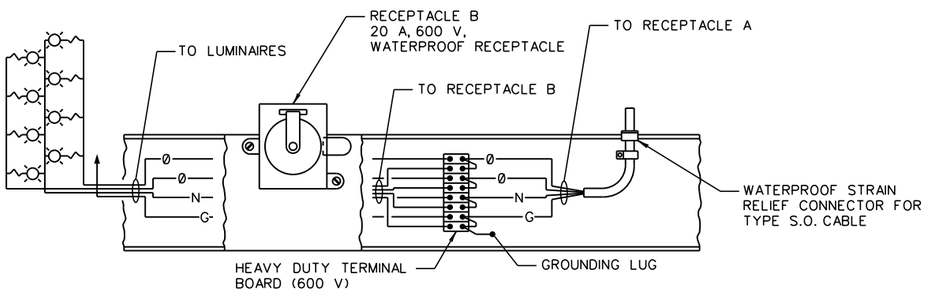

LUMINAIRE SUPPORT WIRING DETAIL

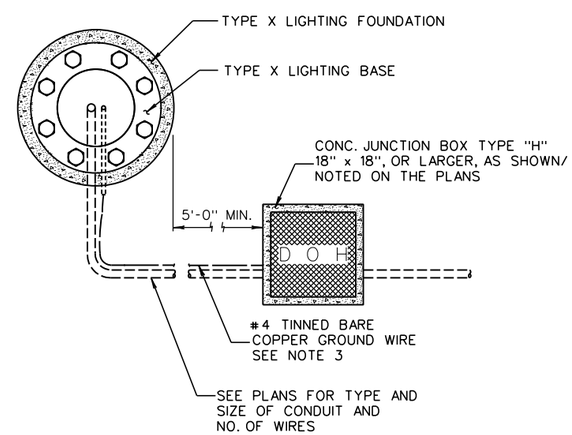

TYPICAL CONDUIT DETAIL

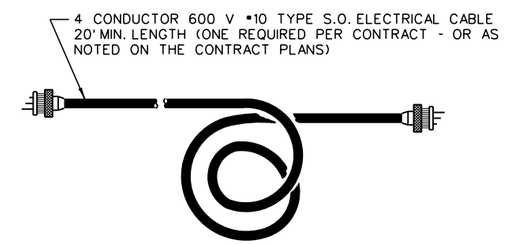

SERVICE CORD DETAIL

WEST VIRGINIA DEPARTMENT OF TRANSPORTATION
DIVISION OF HIGHWAYS
STANDARD DETAIL

PREPARED: 8/2018
REVISION DATE

HIGH MAST LIGHTING POLE DETAILS TYPE X

STANDARD SHEET TEL-16A

TRAFFIC ENGINEERING DIVISION

12/19/2018

Z:\Projects\WVDOT\Standard Details vol II\New_Sheets\Lighting\TEL-16A.dgn

J04C02C03-STDBOR c

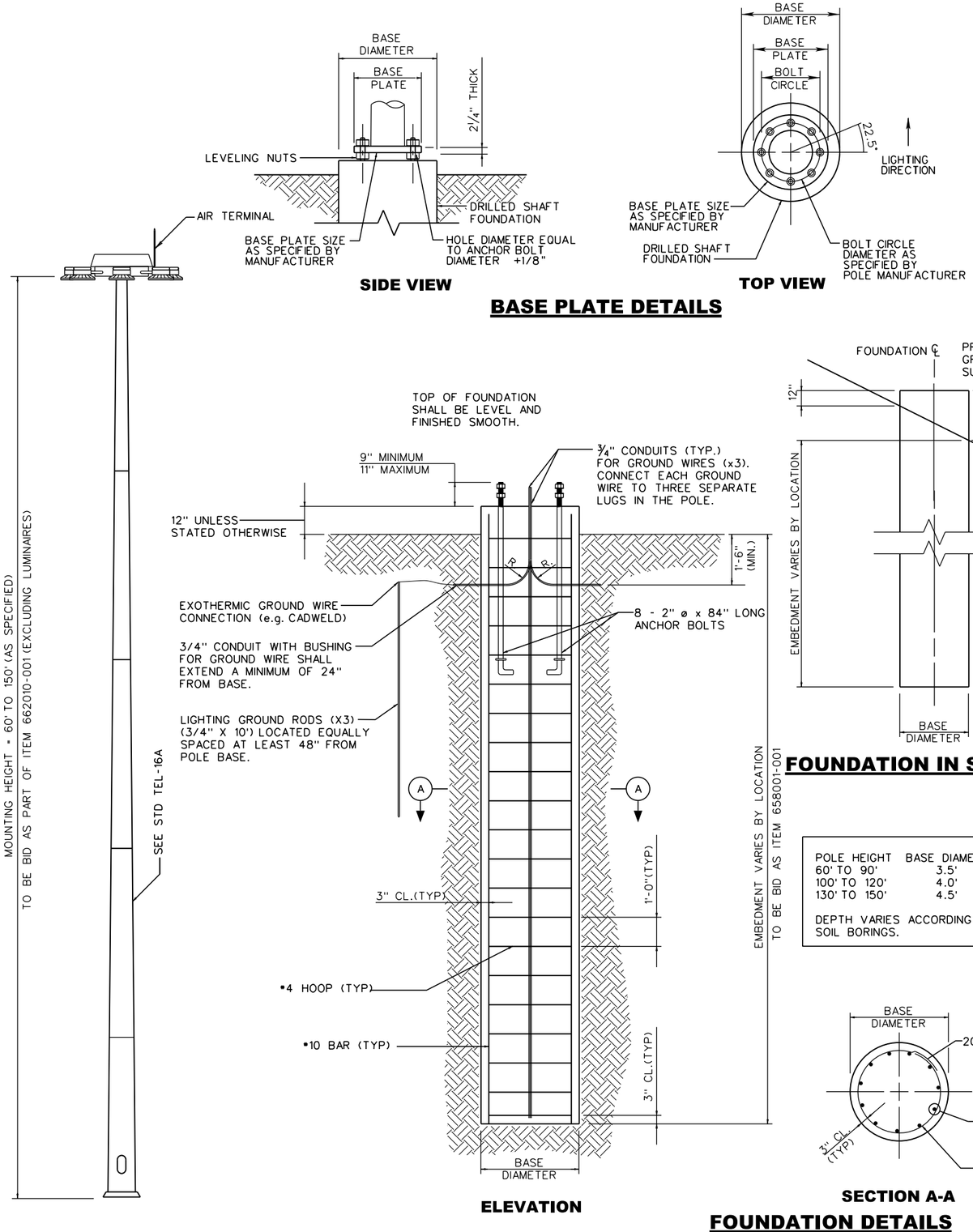

FOUNDATION NOTES

1. CONCRETE:
   A. ALL EXPOSED CONCRETE SHALL HAVE A NORMAL FINISH (SECTION 601 TYPE I).
   B. ALL OUTSIDE CONCRETE CORNERS AND EDGES SHALL HAVE A ¾ INCH CHAMFER.
   C. CONCRETE SHALL BE CLASS B.

2. STEEL:
   A. REINFORCING STEEL SHALL NOT BE CLOSER THAN 3 INCHES TO THE OUTSIDE SURFACE OF THE FOOTING AND SHALL BE TIED. VERTICAL STEEL SHALL BE •10 BAR. ALL BARS SHALL BE GRADE 60.
   B. VERTICAL BARS SHALL BE TIED WITH •4 HOOP BARS AT 12 INCHES ON CENTER. THE •4 HOOP BARS SHALL HAVE A 20 INCH MINIMUM LAP.

3. FOUNDATIONS:
   A. FOR FOUNDATIONS IN FIRM CLAY OR MEDIUM DENSE SAND, AS DETERMINED BY A QUALIFIED WV GEOTECHNICAL PROFESSIONAL ENGINEER HIRED BY THE CONTRACTOR, THE DRILLED SHAFT EMBEDMENT DEPTHS SHALL BE 25 FEET.

      IF SOFT ROCK IS ENCOUNTERED, THE DRILLED SHAFT SHOULD BE TERMINATED A MAXIMUM DEPTH OF 20 FEET INTO THE SOFT ROCK OR TO THE EMBEDMENT DEPTH OF 25 FEET, WHICHEVER IS APPLICABLE.

      IF HARD ROCK IS ENCOUNTERED, THE DRILLED SHAFT SHOULD BE TERMINATED A MAXIMUM DEPTH OF 10 FEET INTO THE HARD ROCK OR TO THE EMBEDMENT DEPTH OF 25 FEET, WHICHEVER IS APPLICABLE.

   B. FOR FOUNDATIONS IN SOFT CLAY OR LOOSE SAND, AS DETERMINED BY A QUALIFIED WV GEOTECHNICAL PROFESSIONAL ENGINEER HIRED BY THE CONTRACTOR, THE DRILLED SHAFT EMBEDMENT DEPTHS SHALL BE 30 FEET.

      IF SOFT ROCK IS ENCOUNTERED, THE DRILLED SHAFT SHOULD BE TERMINATED A MAXIMUM DEPTH OF 20 FEET INTO THE SOFT ROCK OR TO THE EMBEDMENT DEPTH OF 30 FEET, WHICHEVER IS APPLICABLE.

      IF HARD ROCK IS ENCOUNTERED, THE DRILLED SHAFT SHOULD BE TERMINATED A MAXIMUM DEPTH OF 10 FEET INTO THE HARD ROCK OR TO THE EMBEDMENT DEPTH OF 30 FEET, WHICHEVER IS APPLICABLE.

   C. IN BOTH INSTANCES, SOFT ROCK IS DEFINED AS ABLE TO BE PEELED WITH A POCKET KNIFE. HARD ROCK CANNOT BE PEELED WITH A POCKET KNIFE.

4. CONDUIT:
   THE RADIUS (R) OF THE CURVE OF THE INNER EDGE OF ANY BEND SHALL NOT BE LESS THAN THE SIZE SPECIFIED IN THE N.E.C.

5. ANCHOR BOLTS:
   A. ONLY ANCHOR BOLTS WITH J OR L HOOKS ARE ALLOWED. ANCHOR BOLTS WITH PLATES ARE NOT ALLOWED.
   B. BOLTS SHALL PROJECT SUCH THAT A MINIMUM OF 1.5 THREADS IS STICKING UP BEYOND THE NUT. (9 INCHES MINIMUM TO 11 INCHES MAXIMUM ABOVE THE CONCRETE BASE - TYPICAL)

6. CONTRACTOR TO USE SPACERS ON REBAR CAGES TO MAINTAIN PROPER CLEARANCE.

7. INSTALLATION OF DRILLED SHAFTS SHALL BE IN ACCORDANCE WITH SECTION 625 OF THE WVDOH STANDARD SPECIFICATIONS. IF WATER IS ENCOUNTERED IN HIGH MAST DRILLED SHAFTS, CONTRACTOR SHALL PROCEED IN ACCORDANCE WITH SECTIONS 625.4.3, 625.5.2.2, 625.5.4, 625.5.5, AND 625.6.2 OF WVDOH STANDARD SPECIFICATIONS.

8. SEE SEPARATE SHEET FOR MAINTENANCE PLATFORM DETAILS (IF APPLICABLE). BID MAINTENANCE PLATFORM AS PART OF ITEM 662010-010, LIGHTING SUPPORT, TYPE X.

9. CONCRETE SHAFT FOUNDATIONS SHALL BE BID SEPARATELY FROM THE HIGH MAST POLE AND BID AS PART OF ITEM 658001-001, CLASS B CONCRETE FOOTING, REINFORCED, OVERHEAD.

10. WHERE THE LIGHTING CIRCUIT CONDUCTOR SIZE AS INDICATED ON THE PROPOSED CONDUIT & CONDUCTOR SCHEDULE IS LARGER THAN THE BREAKER ALLOWS, THE LIGHTING CIRCUIT CONDUCTORS SHALL TERMINATE WITHIN THE POLE ON A TERMINAL STRIP. CONDUCTORS FROM THE TERMINAL STRIP TO THE ASSOCIATED FEEDER CIRCUIT BREAKER SHALL BE SIZED AS REQUIRED FOR THE CIRCUIT AMPERE RATING WITH A MINIMUM SIZE OF •8 AWG.

11. GROUNDING:
    CONTRACTOR SHALL FOLLOW GROUNDING GUIDELINES FOUND ON LIGHTING POLE FOUNDATIONS DETAILS STANDARD SHEET TEL-15B.

12. FINAL FOUNDATION DEPTH AND GPS COORDINATES OF EACH HM FOUNDATION TO BE PROVIDED BY CONTRACTOR TO WVDOH.

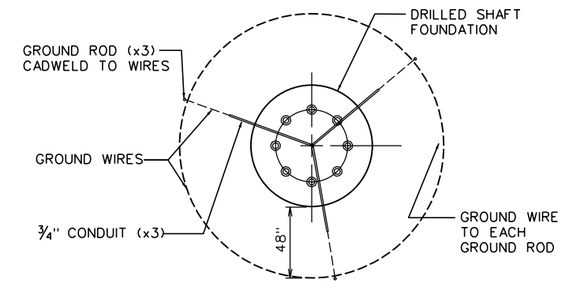

PLAN TOP VIEW

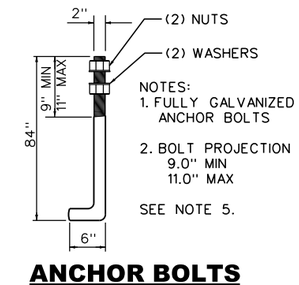

ANCHOR BOLTS

WEST VIRGINIA DEPARTMENT OF TRANSPORTATION
DIVISION OF HIGHWAYS
STANDARD DETAIL

PREPARED: 8/2018
REVISION DATE

HIGH MAST
LIGHT POLE FOUNDATION
DETAILS

STANDARD SHEET TEL-16B

TRAFFIC ENGINEERING DIVISION

J04C02C03-STDBDR c
Z:\Projects\WVDOT\Standard Details vol II\New_Sheets\Lighting\TEL-16B.dgn
12/19/2018

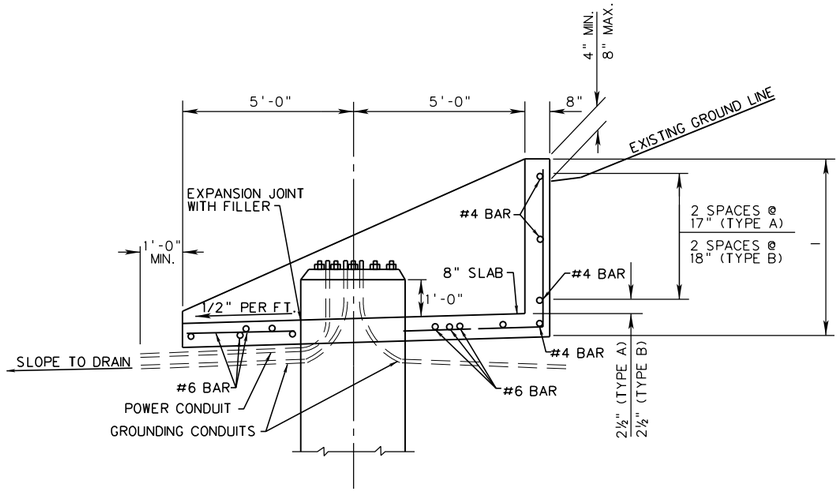

TYPE A AND TYPE B
N.T.S.

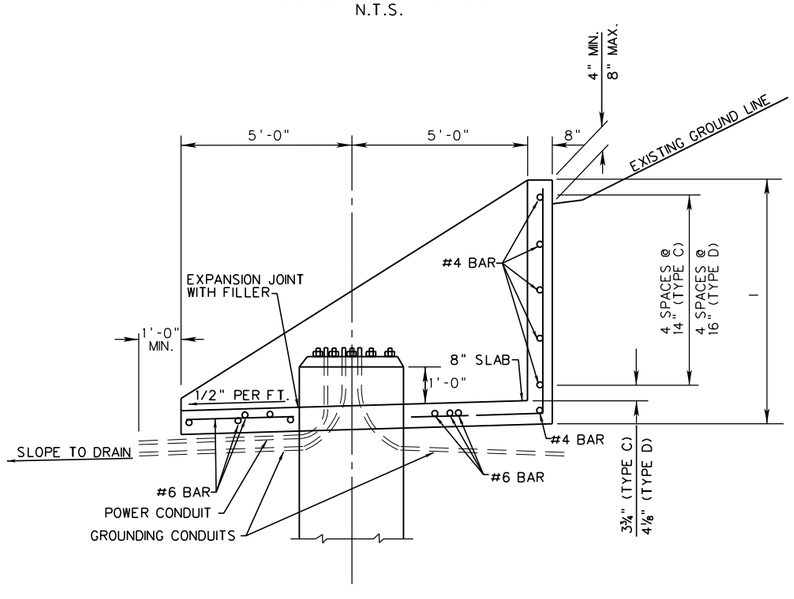

TYPE C AND TYPE D

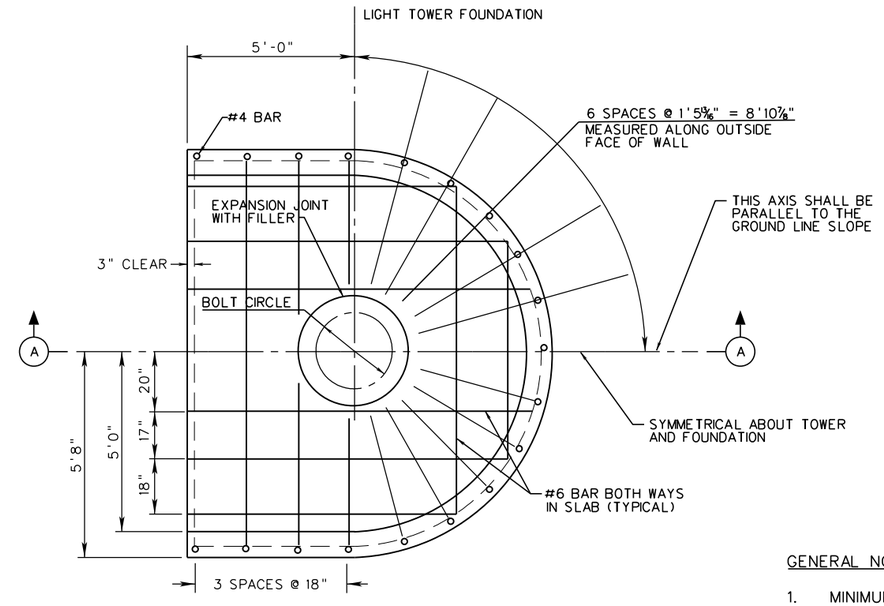

PLAN
N.T.S.

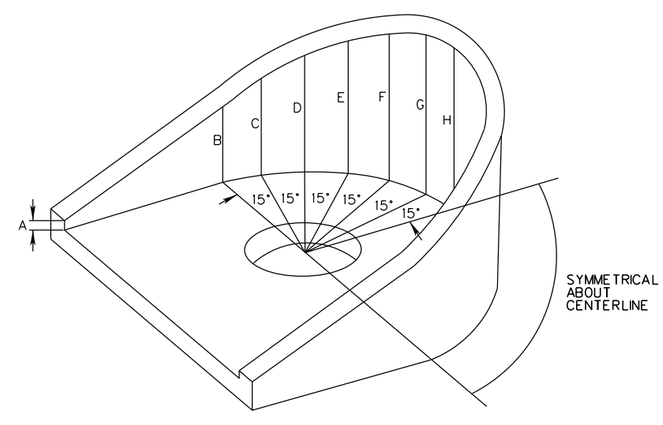

ISOMETRIC
N.T.S.

GENERAL NOTES

1. MINIMUM 3" CLEARANCE FROM REBAR TO SURFACE OF CONCRETE UNLESS NOTED.
2. CONCRETE SHALL MEET THE REQUIREMENTS OF SECTION 601 OF THE STANDARD SPECIFICATIONS, CLASS B.
3. EXTEND CONDUIT ELLS ONE FOOT MINIMUM BEYOND PLATFORM AND SLOPE TO DRAIN AWAY.
4. THE EXPANSION JOINT BETWEEN THE PLATFORM AND FOUNDATION SHALL BE 1" AND FILLED WITH A FILLER MEETING THE REQUIREMENTS OF SECTION 708.3 OF THE STANDARD SPECIFICATIONS.
5. MAINTENANCE PLATFORM FOR HIGH MAST TOWER TO BE BID INCIDENTAL TO ITEM 662010-010, LIGHTING SUPPORT, TYPE X.
6. CONTRACTOR TO GROUT AND SEAL LIFTING POINTS.
7. PER DETAILS, CONTRACTOR TO BACKFILL BACK OF WALL AND ALL VOIDS WITH PROPER COMPACTION PER WVDOH SPECIFICATIONS TO INSURE PROPER DRAINAGE AROUND THE MAINTENANCE PLATFORM.

SECTION A-A
N.T.S.

PLATFORM GROUPING		WALL ELEVATION DATA (FT)								
TYPE	SLOPE	A	B	C	D	E	F	G	H	I
A	3.0:1 TO 3.75:1	.29	1.78	2.23	2.63	2.99	3.27	3.44	3.50	4.140
B	2.5:1 TO 2.99:1	.30	2.14	2.69	3.19	3.63	3.97	4.19	4.25	4.889
C	2.0:1 TO 2.49:1	.31	2.70	3.41	4.06	4.64	5.07	5.35	5.44	6.079
D	1.75:1 TO 1.99:1	.32	3.06	3.87	4.62	5.28	5.78	6.08	6.20	6.839

WEST VIRGINIA DEPARTMENT OF TRANSPORTATION
DIVISION OF HIGHWAYS
STANDARD DETAIL

PREPARED: 8/2018
REVISION DATE

HIGH MAST MAINTENANCE PLATFORM DETAILS

STANDARD SHEET TEL-16C

TRAFFIC ENGINEERING DIVISION

12/19/2018

Z:\Projects\WVDOT\Standard Details vol II\New_Sheets\Lighting\TEL-16C.dgn

J04C02C03-STDBOR c

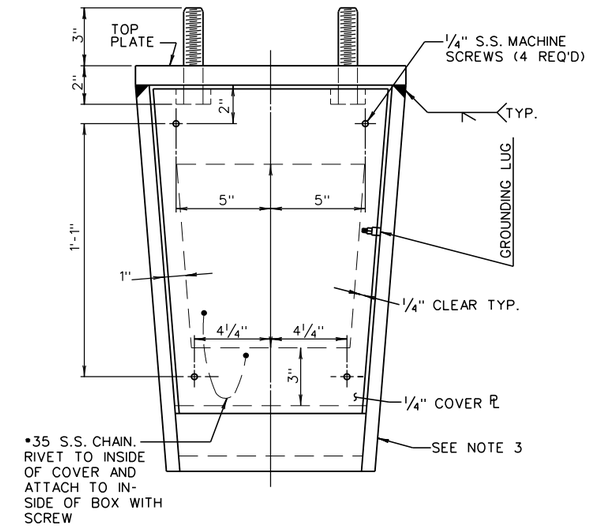

FRONT VIEW

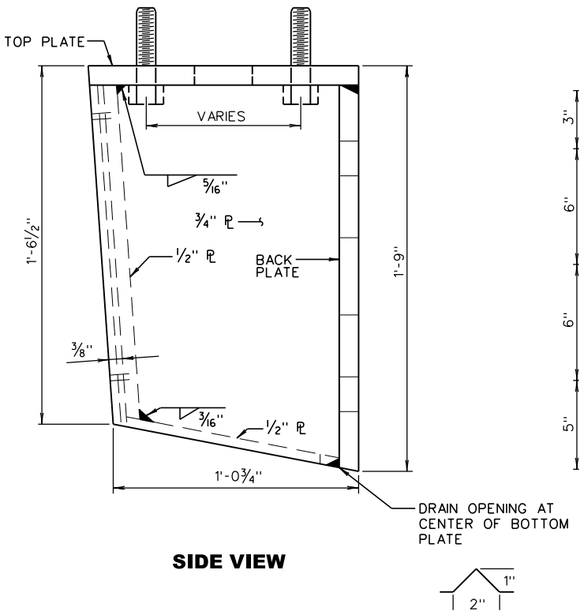

SIDE VIEW

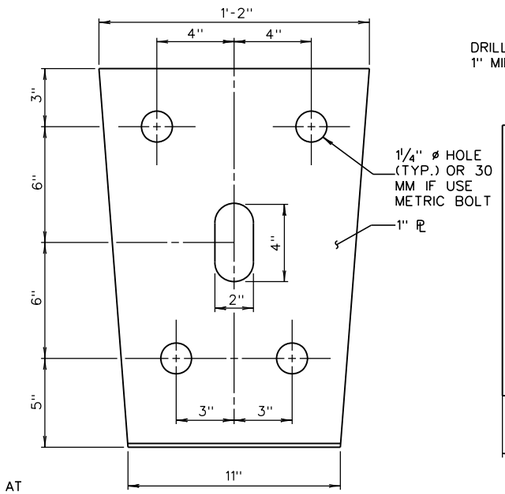

BACK PLATE

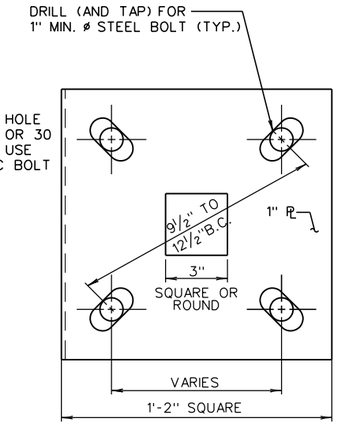

TOP PLATE

GENERAL NOTES

1. ALL TYPE D BOXES ARE TO BE FABRICATED FROM STEEL CONFORMING TO SECTION 662.2.13 OF THE STANDARD SPECIFICATIONS AND HOT DIPPED GALVANIZED AFTER ASSEMBLY.
2. FOR ADDITIONAL STEEL REINFORCING BARS NEEDED TO SUPPORT LIGHTING POLES, SEE INDIVIDUAL BRIDGE DESIGN DRAWING. THIS SHALL ONLY BE USED WITH PREAPPROVAL FROM THE WVDOH.
3. STEEL SPACERS MAY BE WELDED TO BASE PRIOR TO GALVANIZING.
4. EACH LIGHTING POLE TO BE SUPPLIED WITH A MINIMUM OF FOUR 1/16 INCH THICK STANDARD GALVANIZED STEEL SHIMS.
5. ANCHOR BOLTS AND NUTS FOR LIGHTING POLE CONNECTION TO LIGHTING POLE SUPPORT BASE SHALL MEET THE REQUIREMENTS OF SECTION 709.24.

   TIGHTEN ALL HIGH STRENGTH BOLTS BY TURN OF NUT METHOD IN ACCORDANCE WITH SECTION 615 OF THE SPECIFICATIONS.
6. ANCHOR BOLTS FOR LIGHTING POLE SUPPORT BASE CONNECTION TO PARAPET WALL SHALL BE FABRICATED FROM HIGH STRENGTH STEEL HAVING A MINIMUM YIELD STRENGTH OF 55,000 P.S.I. AND A MINIMUM TENSILE STRENGTH OF 90,000 P.S.I. THE PHYSICAL, CHEMICAL AND DIMENSIONAL CHARACTERISTICS OF THE NUTS SHALL BE IN ACCORDANCE WITH THE REQUIREMENTS OF ASTM A-307. WASHERS SHALL MEET ASTM F844.
7. CONTRARY TO WVDOH STD SPEC'NS, SECT. 662, ALL ANCHOR BOLTS SHALL BE FULLY HOT-DIPPED GALVANIZED ALONG THE ENTIRE LENGTH OF THE HEAD, SHAFT AND THREADS.

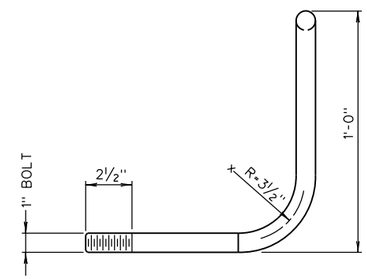

SIDE VIEW

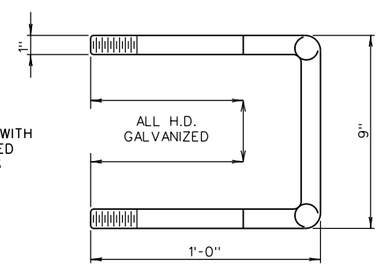

TOP VIEW

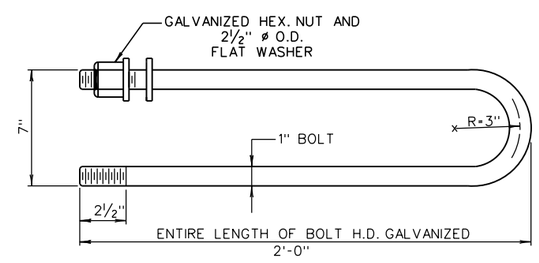

TOP VIEW

ANCHOR BOLTS FOR LIGHTING POLE SUPPORT BASE - TYPE D

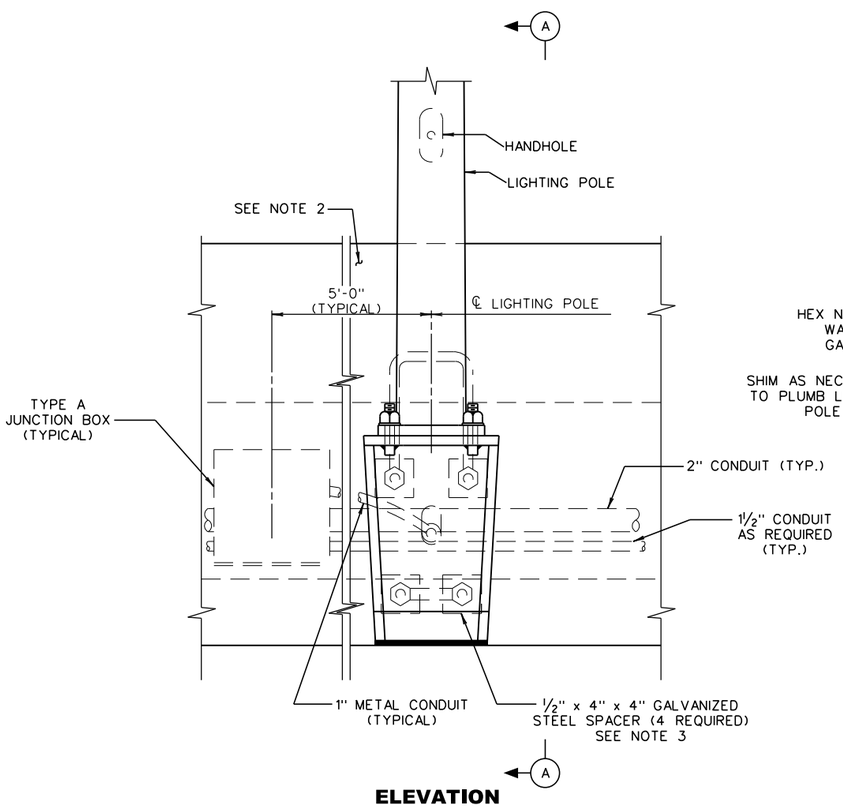

ELEVATION

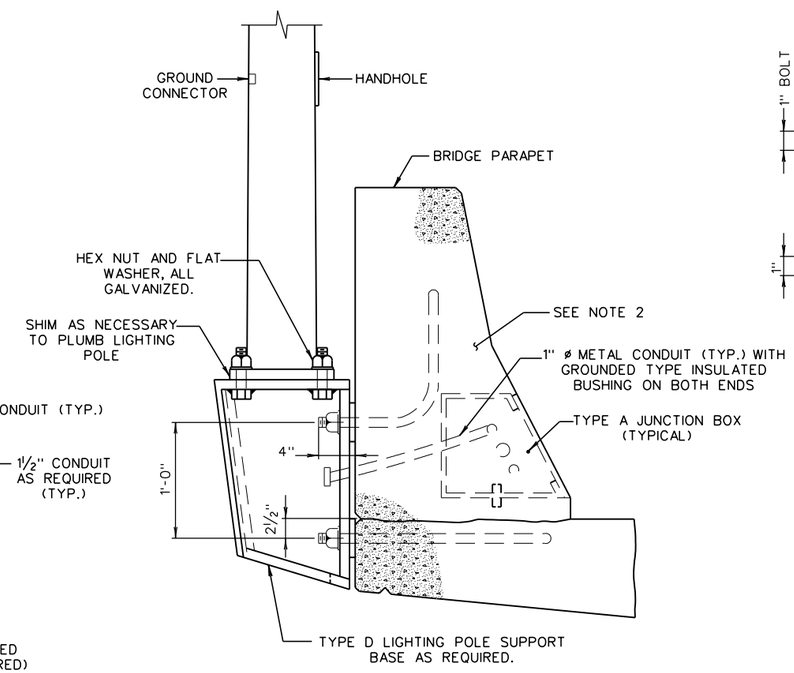

SECTION A-A

TYPE D - INSTALLATION DETAILS

PREAPPROVAL BY WVDOH REQUIRED FOR USE OF ITEMS ON THIS SHEET

WEST VIRGINIA DEPARTMENT OF TRANSPORTATION
DIVISION OF HIGHWAYS
STANDARD DETAIL

PREPARED: 8/2018
REVISION DATE

LIGHTING POLE SUPPORT BASE TYPE D

STANDARD SHEET TEL-17A

TRAFFIC ENGINEERING DIVISION

J04C02C03-STDBDR c
Z:\Projects\WVDOT\Standard Details vol II\New_Sheets\Lighting\TEL-17A.dgn
12/19/2018

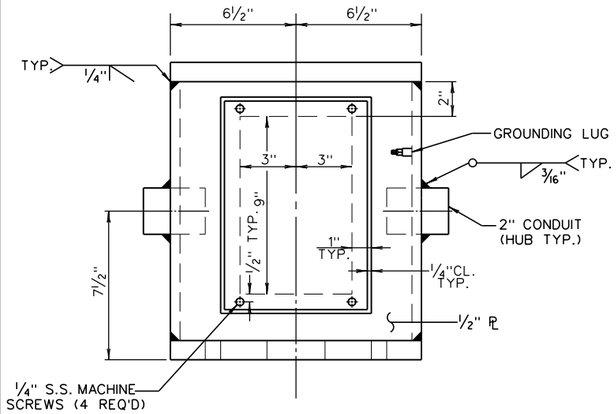

FRONT VIEW

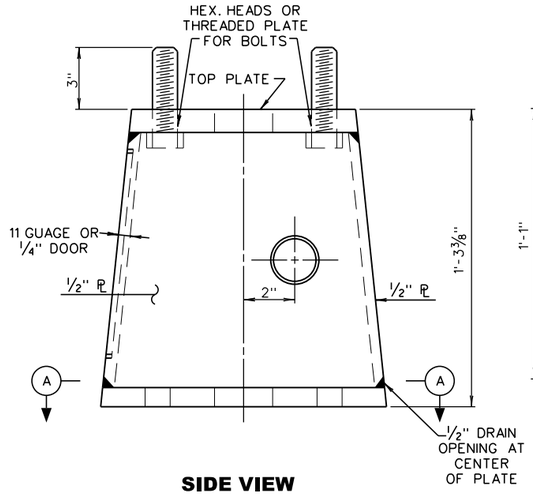

SIDE VIEW

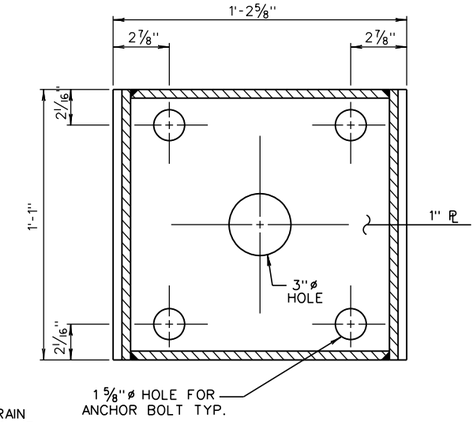

SECTION A-A

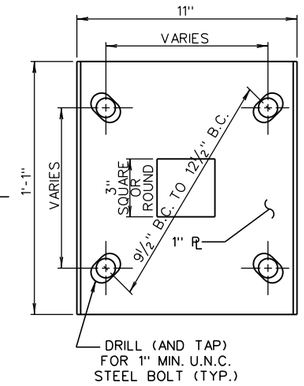

TOP PLATE

NOTES

1. ALL TYPE E BOXES AND PLATES ARE TO BE FABRICATED FROM STEEL CONFORMING TO SECTION 662.2.13 OF THE STANDARD SPECIFICATIONS AND HOT-DIPPED GALVANIZED AFTER ASSEMBLY.
2. FOR ADDITIONAL STEEL REINFORCING BARS NEEDED TO SUPPORT LIGHTING POLES, SEE INDIVIDUAL BRIDGE DESIGN DRAWINGS. THIS SHALL ONLY BE USED WITH PREAPPROVAL FROM THE WVDOH.
3. EACH LIGHTING POLE TO BE SUPPLIED WITH A MINIMUM OF FOUR 1/16 INCH STANDARD GALVANIZED STEEL SHIMS.
4. ANCHOR BOLTS AND NUTS FOR LIGHTING POLE CONNECTION TO LIGHTING POLE SUPPORT BASE SHALL MEET THE REQUIREMENTS OF SECTION 709.24.

   TIGHTEN ALL HIGH STRENGTH BOLTS BY TURN OF NUT METHOD IN ACCORDANCE WITH SECTION 615 OF THE SPECIFICATIONS.
5. ANCHOR BOLTS AND WASHERS FOR LIGHTING POLE SUPPORT BASE CONNECTION TO FOUNDATION ON BRIDGE MEDIAN SHALL CONFORM TO SECTION 662.2.13 OF THE STANDARD SPECIFICATIONS.
6. UNUSED CONDUIT TO BE FIELD CAPPED.
7. CONTRACTOR MAY USE #4 HOOPS SPACED 1 FT-0 IN ON CENTER IN LIEU OF BARS AS SHOWN. HOOPS SHALL HAVE A MINIMUM OF 1 FT-0 IN OVERLAP.

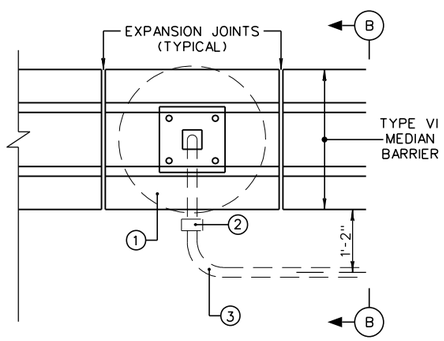

PLAN

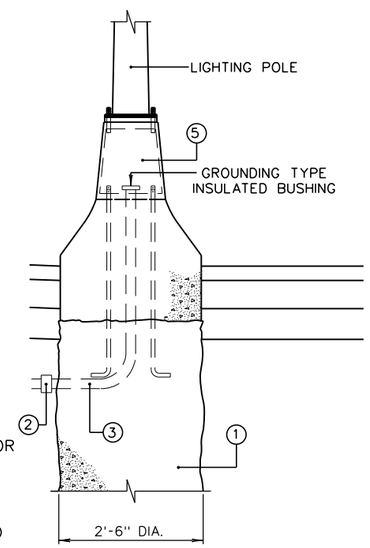

SECTION B-B

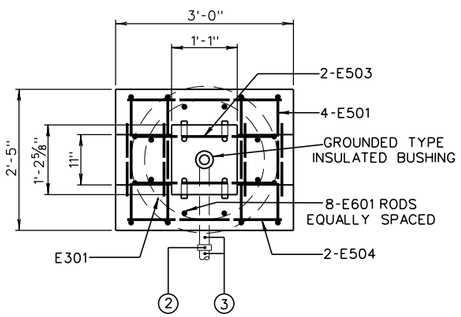

PLAN

TYPE E - INSTALLATION DETAILS FOR MEDIAN BARRIER

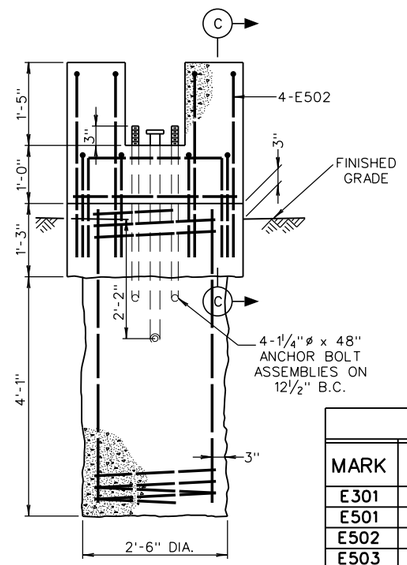

ELEVATION

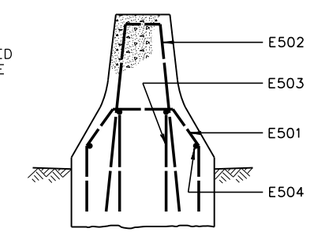

SECTION C-C

LEGEND:

1. TYPE E LIGHTING SUPPORT BASE FOUNDATION FOR MEDIAN BARRIER.
2. CONDUIT COUPLING.
3. 2" METAL CONDUIT UNLESS OTHERWISE INDICATED ON PLANS.
4. CONDUIT EXPANSION AND DEFLECTION JOINT FITTING.
5. TYPE E LIGHTING POLE SUPPORT BASE.
6. ANCHOR PLATE (1", ASTM A-36, GALVANIZED)

REINFORCING BAR SCHEDULE								
MARK	SIZE	NO. REQ'D.	LENGTH	TYPE	A	B	C	D
E301	3	1	204'-0"	3	2'-0"	0'-2"	3'-3"*	
E501	5	4	5'-1"	4	1'-0"	0'-10½"	1'-2"	0'-6"
E502	5	4	6'-11"	5	0'-7"	3'-2"	0'-4"	
E503	5	2	6'-1"	6	2'-5"	1'-10"		
E504	5	2	2'-8"	STR.				
E601	6	8	5'-2"	STR.				

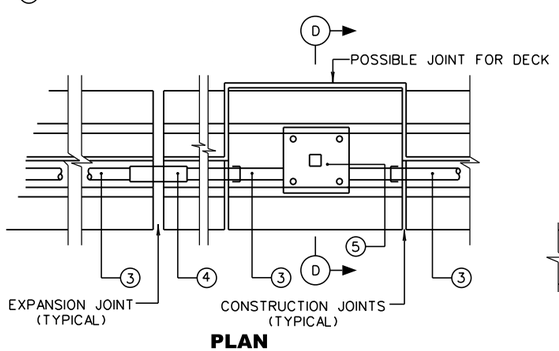

PLAN

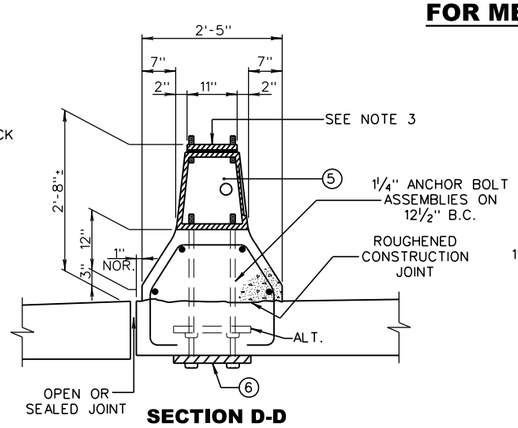

SECTION D-D

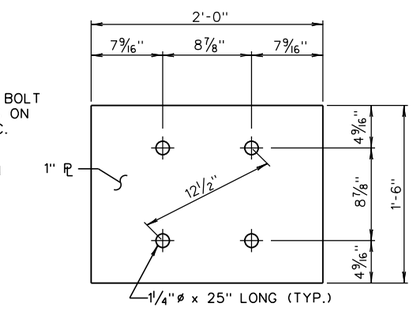

ANCHOR PLATE ASSEMBLY

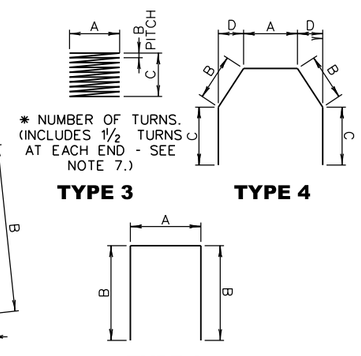

REINFORCING

TYPE E - INSTALLATION DETAILS FOR MEDIAN BARRIER ON BRIDGE

PREAPPROVAL BY WVDOH REQUIRED FOR USE OF ITEMS ON THIS SHEET

WEST VIRGINIA DEPARTMENT OF TRANSPORTATION
DIVISION OF HIGHWAYS
STANDARD DETAIL

PREPARED: 8/2018
REVISION DATE

LIGHTING POLE SUPPORT BASE TYPE E

STANDARD SHEET TEL-17B

TRAFFIC ENGINEERING DIVISION

12/19/2018

Z:\Projects\WVDOT\Standard Details vol II\New_Sheets\Lighting\TEL-17B.dgn

J04C02C03-STDBOR c

DESIGNATOR	MATERIAL	HGT. (H)	TOP BOLT CIRCLE	TOP DIMENSION TYP. (S)	BOTTOM BOLT CIRCLE	BOTTOM DIMENSION TYP. (W)	CONNECTING BOLTS	ANCHOR BOLTS (NOTE 3)	SPECIAL DETAILS
TB1-17	356-T6	17"	10 1/2" TO 13 1/2" SLOTTED	13 1/8" SQ.	13" TO 15" SLOTTED (USE 15")	15 3/8" SQ.	1"-A325 OR 1 1/4"-A307 AS REQUIRED.	1"X40" OR 1 1/4"48" AS REQ'D.	TOP WASHERS-2 1/2"DIAM.X3/8"THICK BOTTOM WASHERS-2 3/4"DIAM.X1/2" THICK UPPER CORNER STIFFENER RIBS PERMITTED (INSIDE TOP) PER MANUF'S. RECOMMENDATIONS
TB2-17	356-T6	17"	10" TO 12" SLOTTED	12" SQ.	10" TO 12" SLOTTED (USE 12")	13" SQ.	1"-A325 OR 1 1/4"-A307 AS REQUIRED.	1"X40" OR 1 1/4"X48" AS REQ'D.	TOP WASHERS-2 1/2"DIA.X3/8"THICK BOTTOM WASHERS-2 3/4"DIA.X1/2" THICK UPPER CORNER STIFFENER RIBS PERMITTED (INSIDE TOP) PER MANUF'S RECOMMENDATIONS
TB3-17	356-T6	17"	13" TO 15 1/8" SLOTTED	15" SQ.	15" TO 17 1/4" (SEE PLANS)	17.5" SQ.	1"-A325 OR 1 1/4"-A307 AS REQUIRED	1"X40" OR 1 1/4"X48" AS REQ'D.	TOP WASHERS-2 3/4"DIA.X1/2"THICK BOTTOM WASHERS-2 3/4"DIA.X1/2" THICK UPPER CORNER STIFFENER RIBS PERMITTED (INSIDE TOP) PER MANUF'S RECOMMENDATIONS

NOTES:

1. BASES SHALL BE IN ACCORDANCE WITH THE AASHTO STANDARD SPECIFICATIONS FOR STRUCTURAL SUPPORTS FOR HIGHWAY SIGNS, LUMINAIRES AND TRAFFIC SIGNALS, 6TH EDITION, 2013 USING 90 MPH WIND SPEED AND FATIGUE CATEGORY I. THE TRANSFORMER BASE SHALL BE CERTIFIED FOR CONFORMANCE TO THE LATEST AASHTO BREAKAWAY PERFORMANCE CRITERIA AND APPROVED BY THE FHWA.
2. THE MANUFACTURER SHALL SPECIFY THE BOLT CIRCLE AND PHYSICAL DIMENSIONS OF THE BASE BOTTOM TO INSURE A PROPER FOUNDATION FIT. EACH BASE MUST MEET THE APPROPRIATE REQUIREMENTS FOR THE POLE, ARM(S), AND LUMINAIRE(S) THAT ARE BEING USED WITH IT.
3. PROVIDE EACH BASE WITH ALL NECESSARY CONNECTING HARDWARE. HARDWARE (E.G. NUTS, BEARING PLATES, WASHERS, PLATES, CLIPS, CONNECTING BOLT COVERS, ETC.) SHALL BE GALVANIZED AND SUPPLIED AS REQUIRED IN ACCORDANCE WITH THE APPROPRIATE POLE SPECIFICATIONS, THE CHART ON TEL-15B, AND THE MANUFACTURER'S RECOMMENDATIONS. USE CONNECTING BOLTS OF THE SAME DIAMETER AND STRENGTH AS THE ANCHOR BOLTS.
4. BREAKAWAY ALUMINUM TRANSFORMER BASE SHALL HAVE A TRAPEZOIDAL DOOR WITH THE FOLLOWING DIMENSIONS (+/- 1 INCH): 11 INCH HIGH, 7.5 INCH ACROSS THE TOP, 9 INCH ACROSS THE BOTTOM.
5. SHIM AS REQUIRED WITH 1/16" GALVANIZED STEEL SHIMS.
6. SPACER PLATES SHALL BE USED TO PREVENT OPENINGS ON TOP OF T-BASE.
7. GROUNDING SHALL COMPLY WITH THAT ILLUSTRATED ON TEL-01 AND TEL-15B.
8. ONE SIDE OF TRANSFORMER BASE FLANGE PLATE NEAR THE DOOR SHALL BE TAPPED FOR GROUNDING LUG. PROVIDE EACH TRANSFORMER BASE WITH A 1/2 INCH 13 UNC TAPPED HOLE OR OTHER SUITABLE PROVISIONS FOR GROUNDING PURPOSES.
9. MAXIMUM SLOPE TO THE TRANSFORMER BASE SHALL BE 6:1.
10. CONCRETE BASES SHALL BE POURED LEVEL. NO MORE THAN 3/8" GAP SHALL EXIST BETWEEN THE CONCRETE BASE AND THE TRANSFORMER BASE WHEN THE POLE IS PLUMBED.

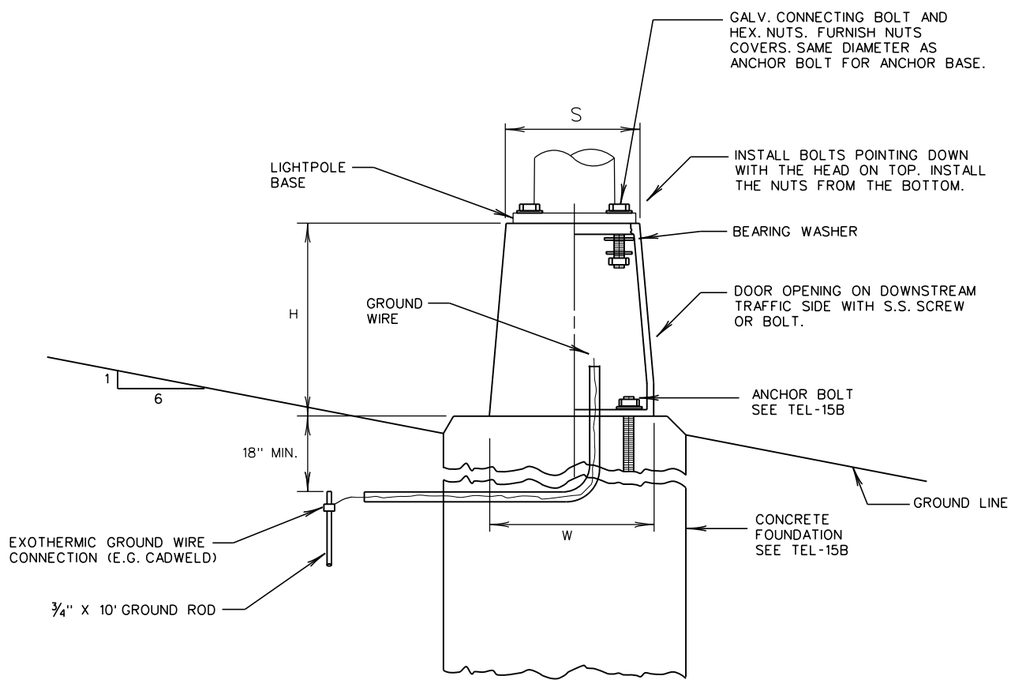

TRANSFORMER BASE DETAIL

WEST VIRGINIA DEPARTMENT OF TRANSPORTATION
DIVISION OF HIGHWAYS
STANDARD DETAIL

PREPARED: 8/2018

REVISION DATE

ALUMINUM TRANSFORMER BASE

STANDARD SHEET TEL-18

12/19/2018

Z:\Projects\WVDOT\Standard Details vol II\New_Sheets\Lighting\TEL-18.dgn

J04C02C03-STDBDR c

TRAFFIC ENGINEERING DIVISION

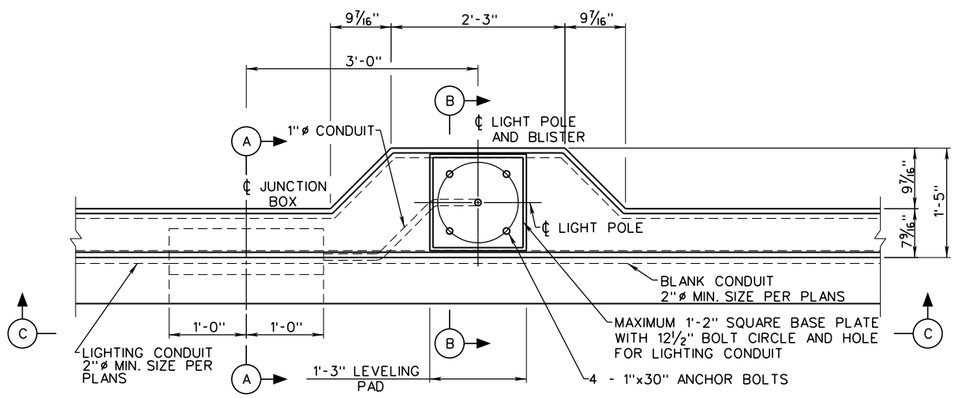

PLAN

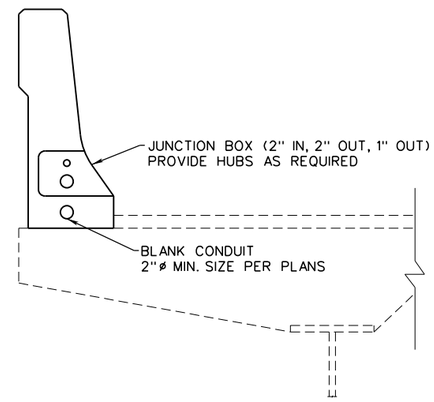

SECTION A-A

GENERAL NOTES

1. ACTUAL BASE PLATE DETAILS TO BE DETERMINED AS REQUIRED BY LIGHTING POLE MANUFACTURER.
2. LEVELING PAD SHALL BE PLACED INTEGRALLY WITH PARAPET WALL. PROVIDE TOOLED EDGE ON PAD.
3. FOR JUNCTION BOX DETAILS NOT SHOWN, SEE JUNCTION BOX TYPE A ON STANDARD SHEET TEL-41.
4. LIGHT POLE, BLISTER AND JUNCTION BOX SHALL BE LOCATED PER PLANS.
5. ELECTRICAL DETAILS AND NOTES SHALL BE PER PLAN.
6. SEE CONTRACT PLANS FOR REINFORCEMENT DETAILS.

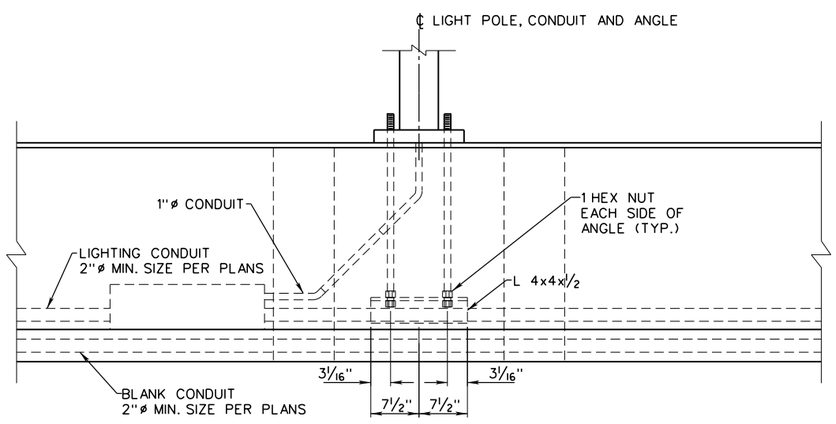

SECTION C-C

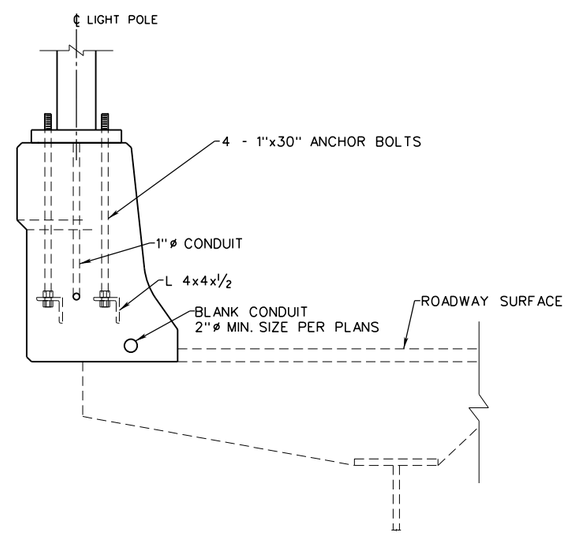

SECTION B-B

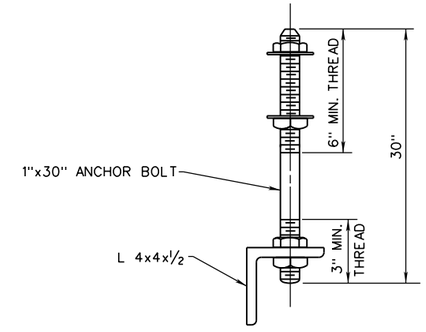

EACH ANCHOR BOLT SHALL INCLUDE TWO HEX NUTS AND TWO FLAT WASHERS AND SHALL BE FULLY GALVANIZED.

ANCHOR BOLT DETAIL

LIGHT POLE BLISTER ON BRIDGE (NEW CONSTRUCTION)

WEST VIRGINIA DEPARTMENT OF TRANSPORTATION
DIVISION OF HIGHWAYS
STANDARD DETAIL

PREPARED: 8/2018
REVISION DATE

LIGHTING POLE BLISTER DETAILS NEW CONSTRUCTION

STANDARD SHEET TEL-19A

TRAFFIC ENGINEERING DIVISION

12/19/2018

Z:\Projects\WVDOT\Standard Details vol II\New_Sheets\Lighting\TEL-19A.dgn

J04C02C03-STDBOR c

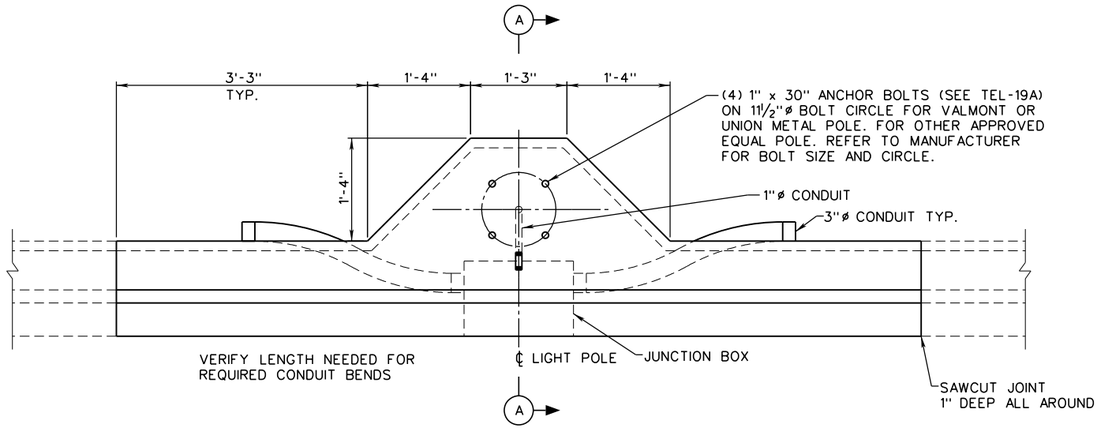

PLAN

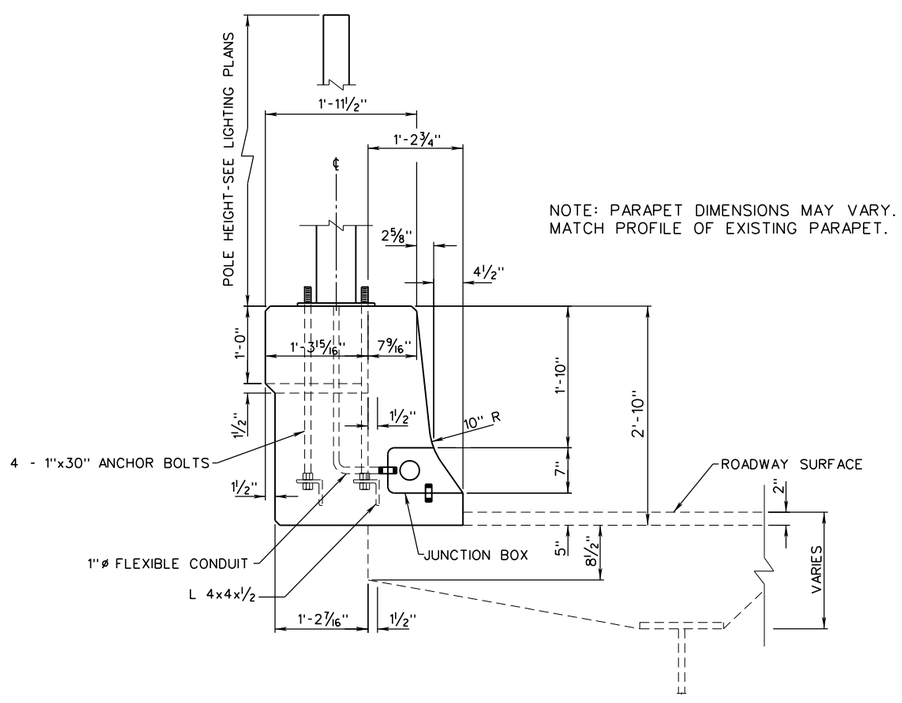

SECTION A-A

LIGHT POLE BLISTER DETAILS (RETROFIT)

GENERAL NOTES

1. ACTUAL BASE PLATE DETAILS TO BE DETERMINED AS REQUIRED BY LIGHTING POLE MANUFACTURER.
2. LEVELING PAD SHALL BE PLACED INTEGRALLY WITH PARAPET WALL. PROVIDE TOOLED EDGE ON PAD.
3. FOR ADDITIONAL ANCHOR BOLT DETAILS, SEE STANDARD SHEET TEL-19A.
4. FOR JUNCTION BOX DETAILS NOT SHOWN, SEE JUNCTION BOX TYPE A ON STANDARD SHEET TEL-41.
5. LIGHT POLE, BLISTER AND JUNCTION BOX SHALL BE LOCATED PER PLANS.
6. ELECTRICAL DETAILS AND NOTES SHALL BE PER PLAN.
7. SEE CONTRACT PLANS FOR REINFORCEMENT DETAILS.

WEST VIRGINIA DEPARTMENT OF TRANSPORTATION
DIVISION OF HIGHWAYS
STANDARD DETAIL

PREPARED: 8/2018

REVISION DATE

LIGHTING POLE BLISTER DETAILS RETROFIT

STANDARD SHEET TEL-19B

TRAFFIC ENGINEERING DIVISION

J04C02C03-STDBOR c

12/19/2018

Z:\Projects\WVDOT\Standard Details vol II\New_Sheets\Lighting\TEL-19B.dgn

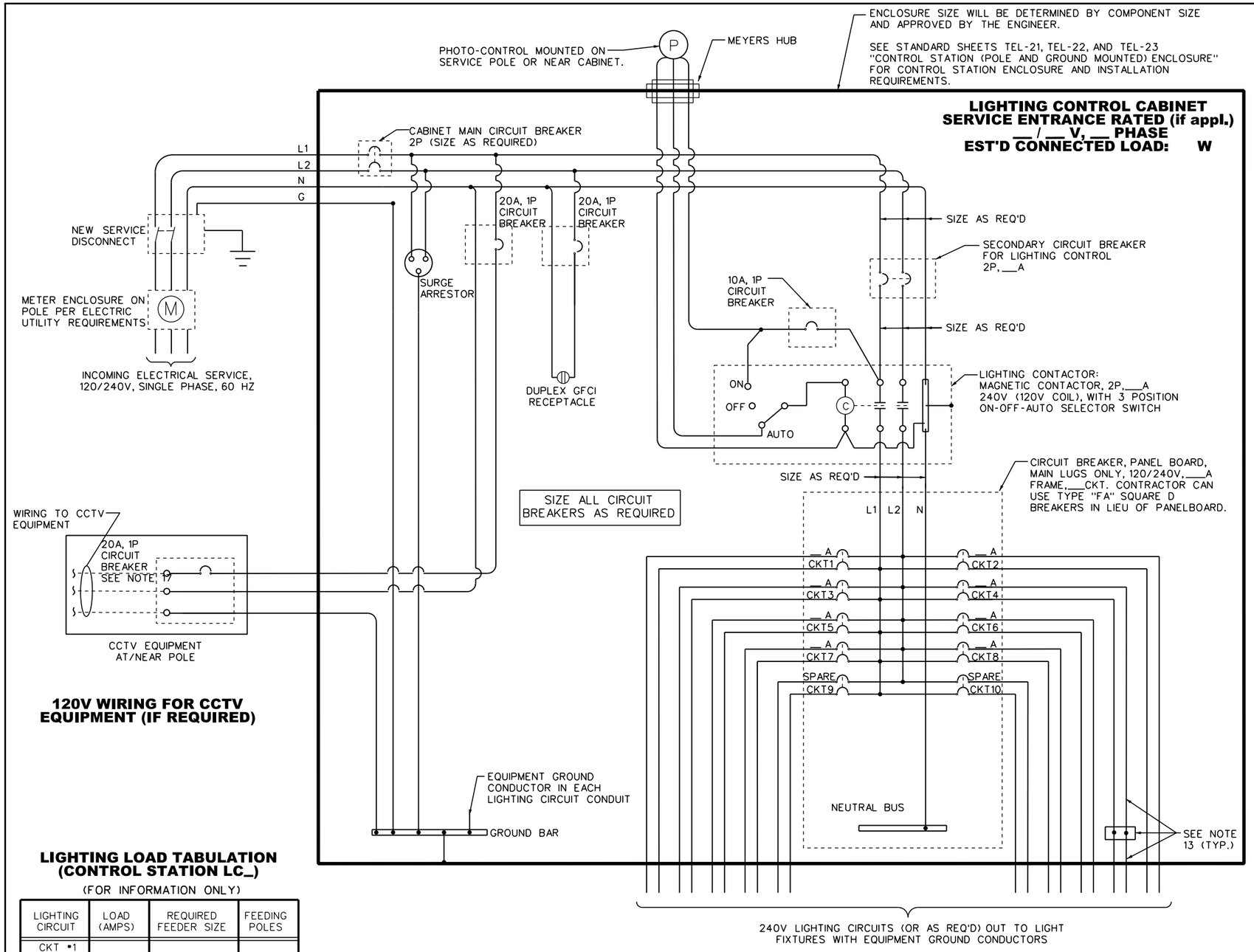

120V WIRING FOR CCTV EQUIPMENT (IF REQUIRED)

LIGHTING LOAD TABULATION (CONTROL STATION LC_)

(FOR INFORMATION ONLY)

LIGHTING CIRCUIT	LOAD (AMPS)	REQUIRED FEEDER SIZE	FEEDING POLES
CKT #1			
CKT #2			
CKT #3			
CKT #4			
CKT #5			
CKT #6			
CKT #7			
CKT #8			
CKT #9			
CKT #10			
120V			
TOTAL			

TYPICAL WIRING SCHEMATIC SINGLE PHASE - POWER SERVICE FOR LIGHTING WITH SEPARATE FEED FOR CCTV CAMERA (IF REQUIRED)

NOTES

1. COMPONENT SIZES FOR CONTROL CENTERS NOT SPECIFIED ON THIS SHEET WILL BE DETERMINED BY EVALUATION OF THE CIRCUIT LOAD.
2. FOR INTERNAL CONTROL CENTER WIRING #10 AWG OR GREATER STRANDED COPPER WIRE SHALL BE USED UNLESS OTHERWISE SPECIFIED.
3. LIGHTNING PROTECTION FOR CONTROL STATION SHALL BE PROVIDED ON THE SERVICE POLE AT THE WEATHERHEAD AS PER TEL-21.
4. CONDUIT HUBS SHALL BE MOUNTED TO ACCOMMODATE ALL CIRCUITS TO BE SERVED. SIZES SHALL BE COMPATIBLE TO CONDUIT SIZE INDICATED ON PLAN SHEETS. REDUCERS SHALL NOT BE USED.
5. IN THE EVENT THAT A CONTROL STATION COMPONENT SIZE FALLS BETWEEN TWO TRADE SIZES, THE HIGHER TRADE SIZE SHALL BE USED.
6. GROUNDING SYSTEMS SHALL BE INSTALLED IN STRICT COMPLIANCE WITH NATIONAL ELECTRIC CODE, STATE AND LOCAL REGULATIONS.
7. ALL WIRING SHALL BE NEAT AND OF GOOD WORKMANSHIP. NATIONAL ELECTRIC CODE STANDARDS SHALL BE ADHERED TO BY THE CONTRACTOR.
8. IN CASES WHERE THE LINE-SIDE OF THE ELECTRICAL SERVICE DOES NOT HAVE A LIGHTNING ARRESTER INSTALLED BY THE SERVING UTILITY COMPANY: THE UNIT MUST BE INSTALLED BY THE CONTRACTOR ON THE LOAD-SIDE OF THE SYSTEM WITHIN THE CONTROL CENTER ENCLOSURE.
9. CONTROL CABINET MOUNTING SHALL BE IN ACCORDANCE WITH STANDARD DRAWINGS OR AS OTHERWISE DIRECTED ON THE CONTRACT PLANS.
10. ENCLOSURES WILL BE NEMA TYPE 4 STAINLESS STEEL CABINET, WITH 3" LETTERING "WV D.O.H. CONTROL STATION LCC# 120/240 VOLTS".
11. ENCLOSURE SIZE WILL BE DETERMINED BY COMPONENT SIZE AND APPROVED BY THE ENGINEER. IT SHALL HAVE A 12" MINIMUM DEPTH.
12. PHOTOELECTRIC UNIT SHALL BE MOUNTED OUTSIDE THE LIGHT ENVELOPE CAST BY THE LIGHTING SYSTEM. PHOTOELECTRIC UNIT WILL BE PHOTO-CELL TWISTLOCK TYPE, STANDARD NEMA WITH 2¾" I.D. LOCKING BASE.
13. WHERE THE LIGHTING CIRCUIT CONDUCTOR SIZE AS INDICATED ON THE PROPOSED CONDUIT & CONDUCTOR SCHEDULE IS LARGER THAT THE BREAKER ALLOWS, THE LIGHTING CIRCUIT CONDUCTORS SHALL TERMINATE WITHIN THE CONTROLLER ON A TERMINAL STRIP. CONDUCTORS FROM THE TERMINAL STRIP TO THE ASSOCIATED FEEDER CIRCUIT BREAKER SHALL BE SIZED AS REQUIRED FOR THE CIRCUIT AMPERE RATING WITH A MINIMUM SIZE OF #8 AWG.
14. CONTACTOR AND CIRCUIT BREAKER SIZES HAVE BEEN INCLUDED ON THE CONTROL DIAGRAM FOR INFORMATION ONLY. THE CONTRACTOR SHALL VERIFY ALL BREAKER SIZES AND PROVIDE DOCUMENTATION IN ACCORDANCE WITH THE ELECTRICAL LOAD REQUIREMENTS BEFORE INSTALLATION. RECALLED OR REFURBISHED BREAKERS ARE NOT ALLOWED.
15. CONTRACTOR TO PROVIDE METERED SERVICE REQUIREMENTS PER LOCAL POWER COMPANY SPECIFICATIONS.
16. CCTV CAMERA FEED GOES TO EXTERNAL ENCLOSED CIRCUIT BREAKER AT CAMERA (SEE STANDARD SPECIFICATIONS). NOTE ONLY 120V IS TO BE BROUGHT INTO THE CCTV CAMERA HOUSING. (IF APPLICABLE.)
17. INSTALL A 20A SINGLE POLE CIRCUIT BREAKER INSIDE BOTTOM OF HIGH MAST POLE. THIS WORK SHALL BE BID INCIDENTAL TO ITEM 662014-00#. (IF APPLICABLE.)
18. PROVIDE TWO SPARE 25A 2-POLE BREAKERS IN EACH CABINET FOR FUTURE USE.
19. CONTRACTOR SHALL PLACE A SET OF AS-BUILT PLANS IN A WEATHERPROOF POUCH IN EACH CORRESPONDING CONTROL STATION CABINET. IN ADDITION, CONTRACTOR SHALL PROVIDE A LAMINATED, TYPED CIRCUIT DIRECTORY ON INSIDE OF PANEL DOOR. THIS SHALL BE INCIDENTAL TO 662013-001(*). * PER CONTROLLER CABINET.
20. ENCLOSURE POWER-OFF DOOR INTERLOCK SHALL NOT BE USED FOR THIS CONTROL CABINET.

LEGEND

- CIRCUIT BREAKER
- (C) CONTACTOR COIL
- SELECTOR SWITCH
- BUS
- RECEPTACLE
- (P) PHOTOCELL

WEST VIRGINIA DEPARTMENT OF TRANSPORTATION
DIVISION OF HIGHWAYS
STANDARD DETAIL

PREPARED: 8/2018
REVISION DATE

LIGHTING CABINET WIRING DIAGRAM

STANDARD SHEET TEL-20

TRAFFIC ENGINEERING DIVISION

12/19/2018

Z:\Projects\WVDOT\Standard Details vol II\New_Sheets\Lighting\TEL-20.dgn

J04C02C03-STDBOR c

GENERAL NOTES

1. SERVICE LOCATION SHALL BE COORDINATED WITH LOCAL UTILITY. FINAL LOCATION OF THE SERVICE POLE SHALL BE DETERMINED IN THE FIELD BY THE ENGINEER.
2. THE CONTROL STATION CABINET MAY BE POLE MOUNTED ON THE SERVICE POLE (E.G. ON THE FIRST POLE OF LIGHTING CIRCUIT). SEE SHEET TEL-22.
3. WOOD SERVICE POLE SHALL MEET THE REQUIREMENTS OF SECTION 710.8 OF THE STANDARD SPECIFICATIONS.

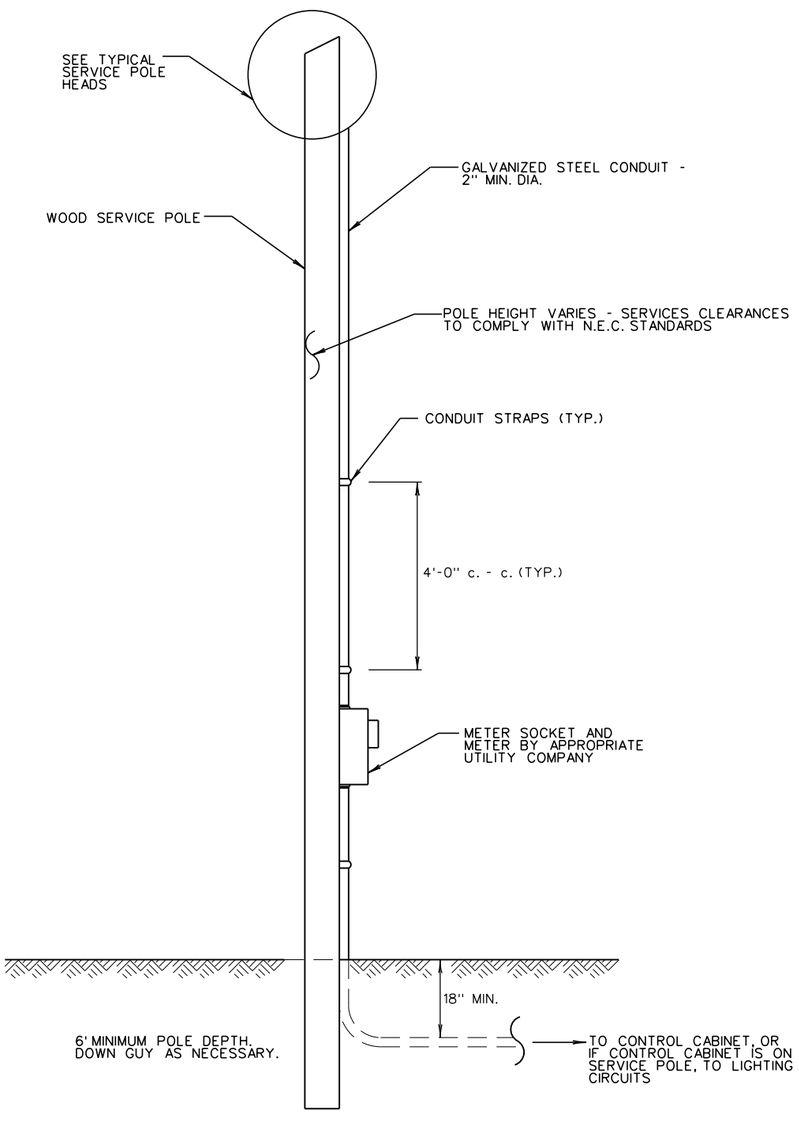

SERVICE POLE TYPICAL

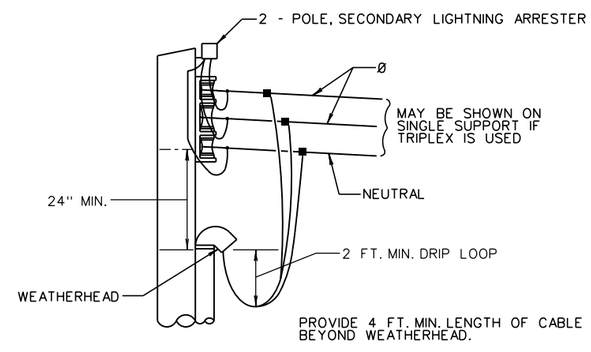

3-WIRE SERVICE

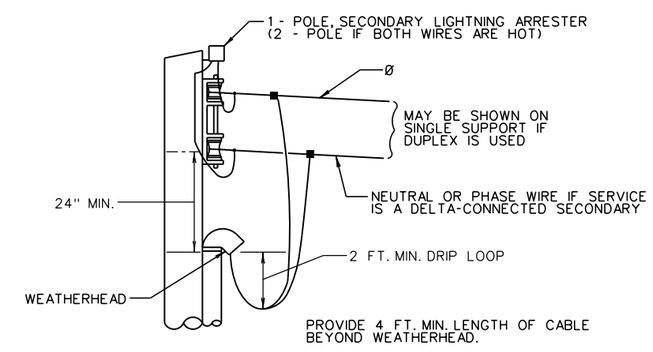

2-WIRE SERVICE

TYPICAL SERVICE POLE HEADS

WEST VIRGINIA DEPARTMENT OF TRANSPORTATION
DIVISION OF HIGHWAYS
STANDARD DETAIL

PREPARED: 8/2018

REVISION DATE

SERVICE POLE DETAILS

STANDARD SHEET TEL-21

TRAFFIC ENGINEERING DIVISION

12/19/2018
Z:\Projects\WVDOT\Standard Details vol II\New_Sheets\Lighting\TEL-21.dgn
J04C02C03-STDBOR c

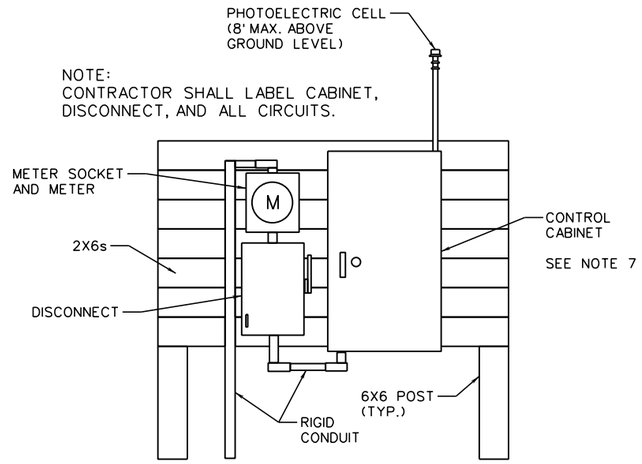

WOOD COMPONENT

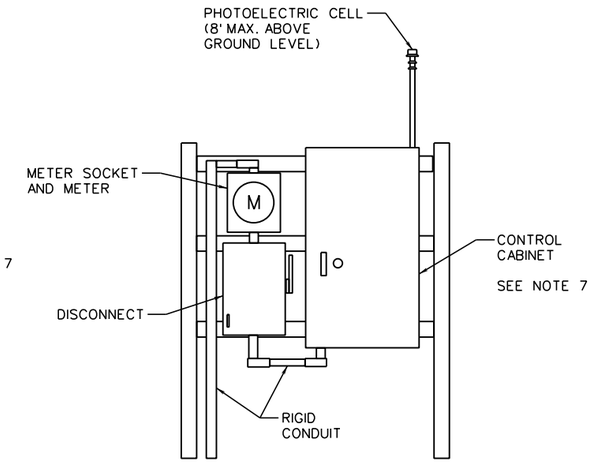

FULLY GALVANIZED STEEL POLES WITH STEEL OR ALUMINUM CROSS MEMBERS AND BACKBOARD

PANELBOARD MOUNTED SERVICE AND CABINET

GENERAL NOTES

1. SERVICE LOCATION SHALL BE COORDINATED WITH LOCAL UTILITY. FINAL LOCATION OF THE SERVICE POLE SHALL BE DETERMINED IN THE FIELD BY THE ENGINEER.
2. PHOTOELECTRIC (P.E.) CELL WILL BE PHOTOCELL - TWISTLOCK TYPE, STANDARD NEMA WITH 2¾ INCH ID LOCKING BASE.
3. THE P.E. UNIT SHALL NORMALLY BE MOUNTED ON THE SAME POLE AS THE CONTROL STATION CABINET IS MOUNTED. THE P.E. UNIT FOR PANEL MOUNTED CONTROL STATIONS SHALL BE MOUNTED AT THE ENCLOSURE AS SHOWN UNLESS OTHERWISE DIRECTED ON THE PLANS.
4. CONDUIT CONNECTION TO ALL CABINETS SHALL BE MADE THROUGH THE BASE OF THE CABINETS ONLY (EXCEPT P.E.).
5. THE CONTROL STATION CABINET MAY BE POLE MOUNTED ON THE SERVICE POLE (E.G. ON THE FIRST POLE OF LIGHTING CIRCUIT).
6. THE METHOD SHOWN FOR CONTROL STATION CABINET POLE MOUNTING SHALL BE USED ONLY IN SITUATIONS WHERE SMALL CONTROL CABINETS ARE USED. LARGER CABINETS SHALL BE MOUNTED ON A PANELBOARD AS SHOWN ON THIS SHEET OR GROUND MOUNTED AS SHOWN ON SHEET TEL-23.
7. SIZE CABINET APPROPRIATELY. EQUIP THE ENCLOSURE WITH TWO ADJUSTABLE "C" MOUNTING CHANNELS ON BOTH THE SIDE WALLS AND THE BACK WALL. PROVIDE A REAR ALUMINUM PANEL THAT IS A MINIMUM OF 27 IN. W X 42 IN. HIGH. MINIMUM CABINET DEPTH IS 12 INCHES.

NOTE:
LOCATE PHOTOCELL NO HIGHER THAN 8' ABOVE GROUND LEVEL.
PHOTOCELL "WINDOW" SHALL BE ORIENTED NORTH.
IF NOT POSSIBLE, ORIENT SOUTH. ALSO - SEE NOTE 2.

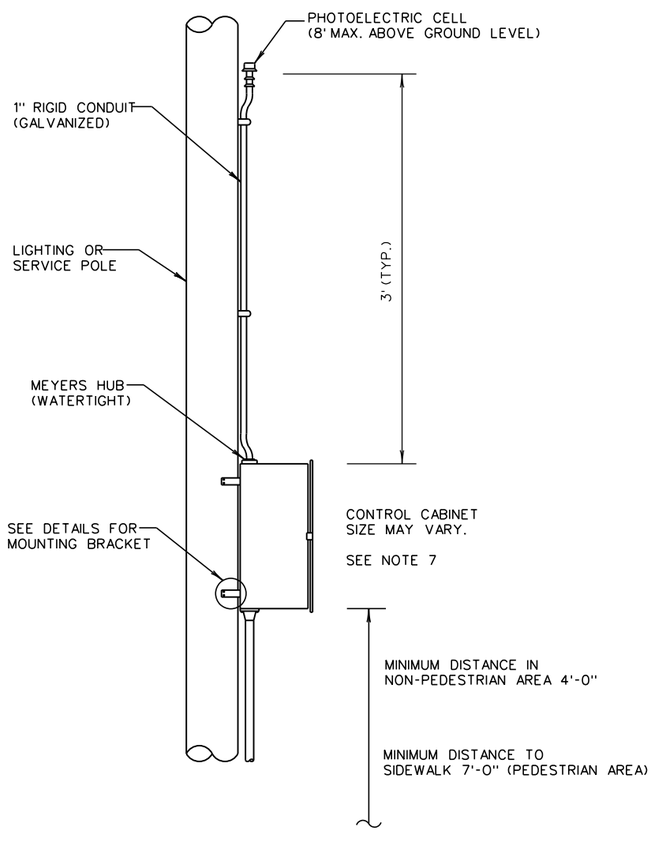

LIGHTING CONTROL STATION - POLE MOUNTING DETAIL

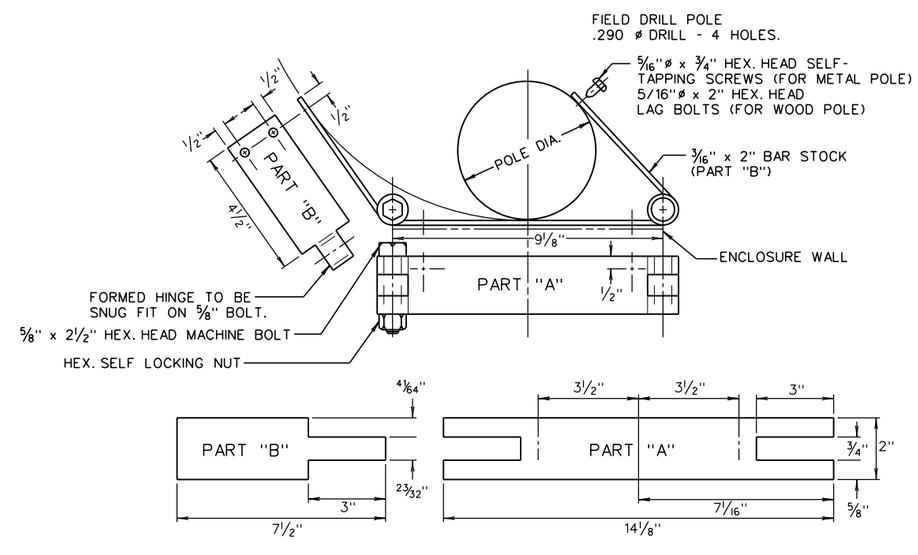

MOUNTING BRACKET

FOR USE ON WOOD OR STEEL POLES

WEST VIRGINIA DEPARTMENT OF TRANSPORTATION
DIVISION OF HIGHWAYS
STANDARD DETAIL

PREPARED: 8/2018

REVISION DATE

CONTROL STATION MOUNTING DETAILS

STANDARD SHEET TEL-22

TRAFFIC ENGINEERING DIVISION

12/19/2018

Z:\Projects\WVDOT\Standard Details vol II\New_Sheets\Lighting\TEL-22.dgn

J04C02C03-STDBOR c

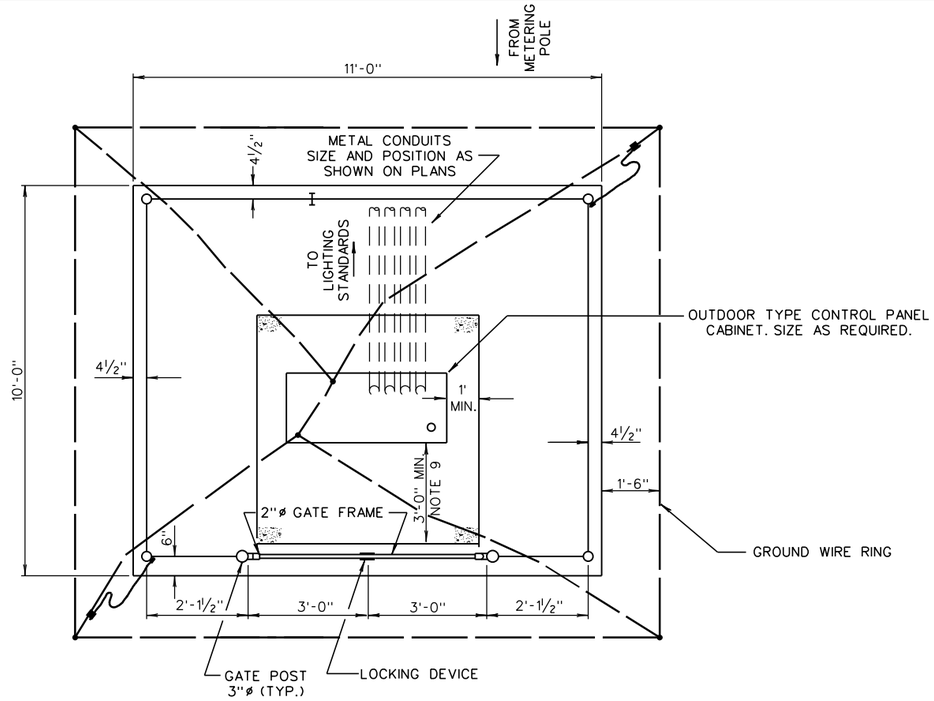

PLAN

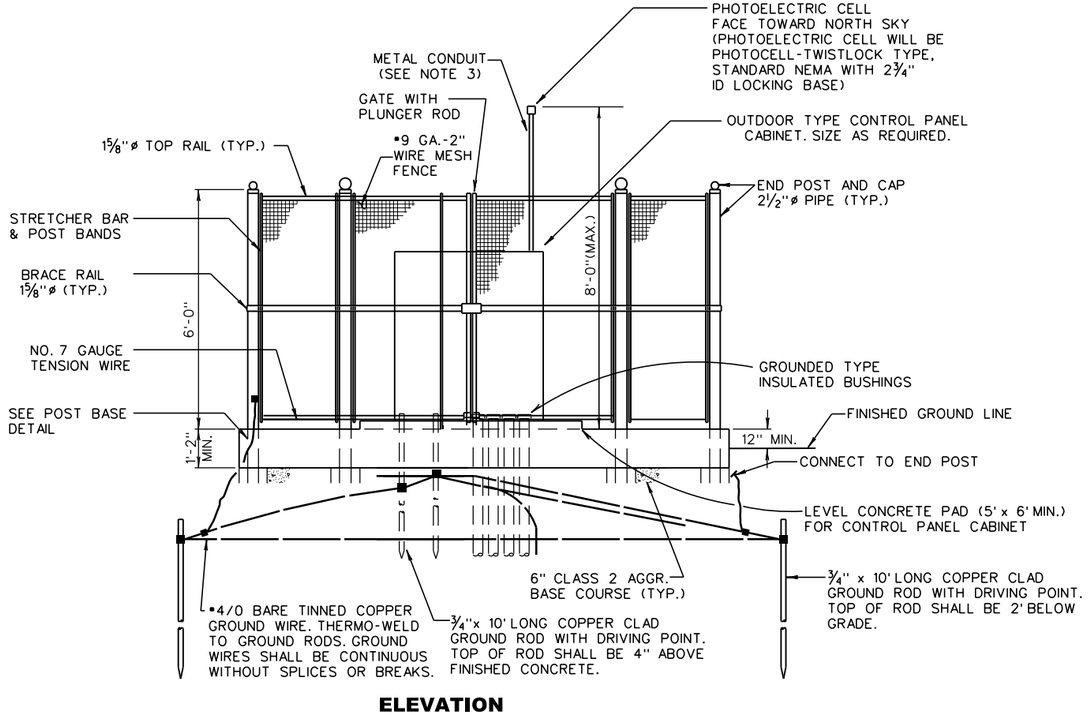

ELEVATION

CONTROL STATION ENCLOSURE

GENERAL NOTES

1. THE DIMENSIONS OF THE ENCLOSURE SHALL BE 10 FT-0 IN x 11 FT-0 IN x 1 FT-2 IN FOR THE CONCRETE PAD. CONSTRUCT THE PAD WITH A 12:1 SLOPE SO WATER RUNS OFF THE FRONT.
2. REINFORCEMENT IN CONCRETE PAD FOUNDATION SHALL BE #6 BARS SPACED AT 8 INCH DEPTH-WISE AND 16 INCHES LENGTH-WISE AT 3 INCHES FROM BOTTOM OF FOUNDATION.
3. CONDUIT MOUNTED P.E. UNIT TO BE USED IF SYSTEM EMPLOYS PRIMARY VOLTAGE ON METERING POLE OR IF NOTED ON THE CONTRACT PLANS. CONDUIT TO SUPPORT P.E. UNIT SHALL BE 1.5 INCH O.D. GALVANIZED STEEL.
4. LIGHTING CONTROL CABINET SHALL BE ELEVATED ON AN ADDITIONAL 3" INCHES ON A 5' X 7' CONCRETE RISER.
5. CONTRACTOR TO PROVIDE TWO SPARE TWO-INCH CONDUITS FROM THE CABINET TO FOUR FEET OUTSIDE THE FENCE, THREADED AND CAPPED ON BOTH ENDS,
6. ALL CONCRETE SHALL BE CLASS B.
7. THE CONTROL CABINET SHALL HAVE DOUBLE DOORS AND BE NEMA TYPE 4. IT SHALL HAVE ADJUSTABLE MOUNTING CHANNELS ON BOTH SIDES AND ON THE BACK WALL. IT SHALL BE OF 0.125 INCH THICK ALUMINUM TYPE 5052-H3 AND BE REINFORCED TO SUPPORT LOADING AND DOORWAYS.
8. CONTROL CABINET SIZES WILL BE DETERMINED BY COMPONENT REQUIREMENTS AND SUBMITTED FOR APPROVAL TO THE WVDOH ENGINEER. SIZE CABINET APPROPRIATELY. EQUIP THE ENCLOSURE WITH TWO ADJUSTABLE "C" MOUNTING CHANNELS ON BOTH THE SIDE WALLS AND THE BACK WALL. PROVIDE A REAR ALUMINUM PANEL THAT IS A MINIMUM OF 27 IN. W X 42 IN. HIGH. MINIMUM CABINET DEPTH IS 12 INCHES.
9. MINIMUM DISTANCE AROUND THE CONTROL CABINET TO ANY OBJECT SHALL BE A MINIMUM OF 3 FT. FOR 120/240V.
10. IF THE CONTROL STATION IS NEAR OR ON A SLOPE, CONSTRUCT A REINFORCED CONCRETE WALL ON THE UPPER SLOPE SIDE AND SIDES TO REDIRECT THE WATER FROM CROSSING THE ENCLOSURE PAD.
11. ALL WORK SHALL BE BID AS PART OF ITEM 662013-001, SERVICE AND CONTROL STATION, PER EACH.

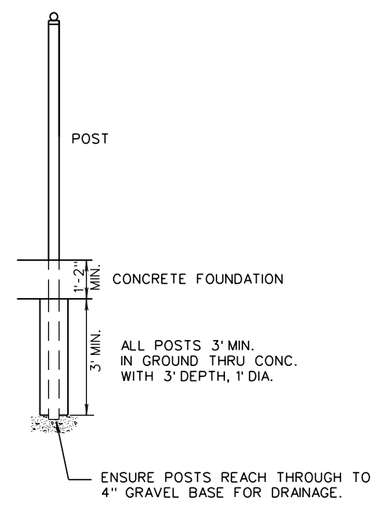

POST BASE DETAIL

WEST VIRGINIA DEPARTMENT OF TRANSPORTATION
DIVISION OF HIGHWAYS
STANDARD DETAIL

PREPARED: 8/2018

REVISION DATE

GROUND MOUNTED CONTROL STATION DETAILS

STANDARD SHEET TEL-23

TRAFFIC ENGINEERING DIVISION

12/19/2018

Z:\Projects\WVDOT\Standard Details vol II\New_Sheets\Lighting\TEL-23.dgn

J04C02C03-STDBDR c

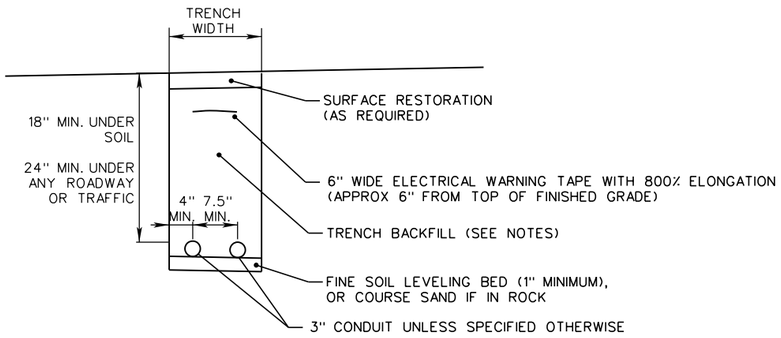

NOTES:

TRENCH SHALL BE BACKFILLED AND COMPACTED IN ACCORDANCE WITH 670.4.5 OF THE SPECIFICATIONS.

TO BE BID AS PART OF PAY ITEM 662002-001, GALVANIZED STEEL CONDUIT.

REPAIR OF TRENCH CUT AND PLACEMENT OF WARNING TAPE IN SOIL

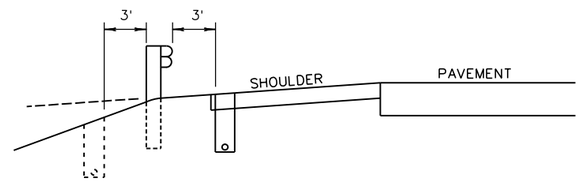

CONDUIT LOCATION ALONG GUARDRAIL

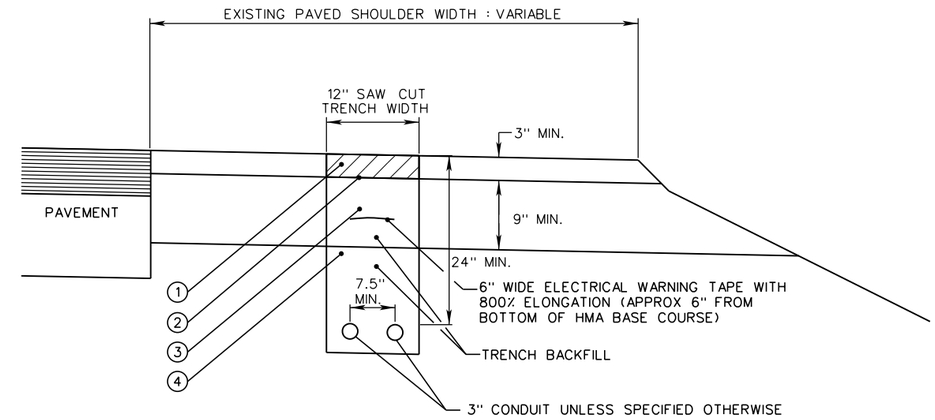

REPAVING OF TRENCH AND WARNING TAPE IN PAVED SHOULDER

NOTES:

HMA AND CLASS I AGGREGATE SHALL BE PLACED TO THICKNESS EQUAL TO EXISTING SHOULDER THICKNESS OR TO THE MINIMUMS AS SHOWN, WHICH EVER ARE GREATER.

TRENCH SHALL BE BACKFILLED AND COMPACTED IN ACCORDANCE WITH 670.4.5 OF THE SPECIFICATIONS.

1. ITEM 401001-001, HOT-MIX ASPHALT BASE COURSE, TYPE II
2. ITEM 409002-001, BITUMINOUS MATERIAL, GAL. PER S.Y.
3. ITEM 307001-000, AGGREGATE BASE COURSE CLASS II
4. ITEM 212005-000, SELECT MATERIAL FOR BACKFILLING, ROCK FREE DIRT/SAND

CONTRACTOR MAY SUBSTITUTE FLOWABLE FILL OR HMA BASE COURSE FOR ITEM 307001-000.

ALL ITEMS ABOVE (1-4) TO BE BID TO APPROPRIATE PAY ITEM SUCH AS TO GALVANIZED STEEL CONDUIT.

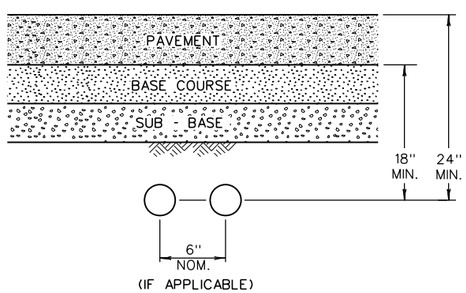

1. DIMENSIONS ARE MEASURED AT POINT OF CONDUIT ENTRANCE. EXIT DIMENSIONS MAY VARY +12"/-6" VERTICALLY, +12"/-3" HORIZONTALLY (BETWEEN CONDUITS) UNLESS OTHERWISE APPROVED.
2. CROSSING TO TERMINATE BOTH ENDS IN JUNCTION BOX UNLESS OTHERWISE NOTED.
3. CONDUIT TO BE JACKED OR BORED AND MAY NOT BE WASH-BORED.

CROSSING DETAIL

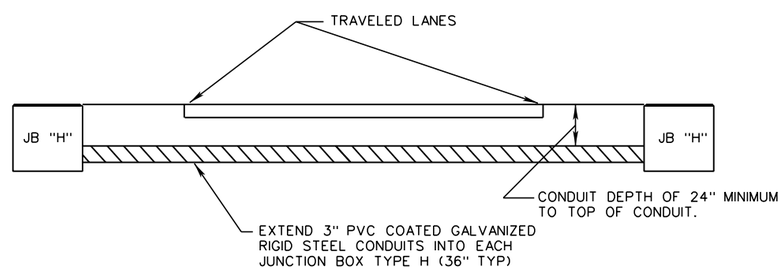

SPECIFICATIONS FOR PVC COATED GALVANIZED RIGID STEEL CONDUIT:
- 3" GALVANIZED RIGID STEEL CONDUIT
- 2 mil RED URETHANE INTERIOR COATING
- 40 mil GRAY PVC EXTERIOR COATING
- INSTALL PER MANUFACTURER'S INSTRUCTIONS
- BID AS PART OF ITEM 662002-001, GALVANIZED STEEL CONDUIT PER SYSTEM

TYPICAL CONDUIT CROSSING UNDERNEATH TRAVELED LANES

WEST VIRGINIA DEPARTMENT OF TRANSPORTATION
DIVISION OF HIGHWAYS
STANDARD DETAIL

PREPARED: 8/2018

REVISION DATE

ROAD CROSSING AND TRENCH DETAILS

STANDARD SHEET TEL-30

TRAFFIC ENGINEERING DIVISION

J04C02C03-STDBDR c
12/19/2018
Z:\Projects\WVDOT\Standard Details vol II\New_Sheets\Lighting\TEL-30.dgn

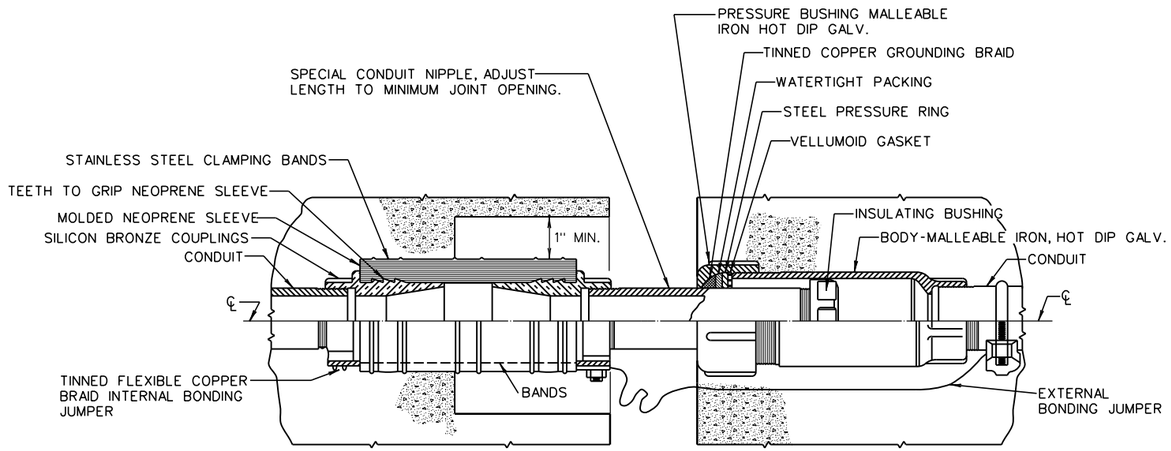

CONDUIT DEFLECTION / EXPANSION JOINT FITTING

NOT TO SCALE

NOTE

PROVIDE DEFLECTION / EXPANSION FITTING AT ALL EXPANSION JOINTS AND ALL STRINGER (STRESS) RELIEF JOINTS IN BRIDGE STRUCTURES, MEDIANS, PARAPETS, RETAINING WALLS, AND SIMILAR LOCATIONS. PROVIDE SIMILAR INSTALLATION IN EXPOSED CONDUIT RUNS AS REQUIRED AT EXPANSION JOINTS, ETC., AND NEAR THE JOINT BETWEEN EXPOSED AND BURIED OR ENCASED CONDUIT. FITTING TO BE SIMILAR TO COMBINATION OF OZ/GEDNEY TYPES EX, AX, DX AND AXDX FITTINGS AND SHALL BE SET FOR MOVEMENT IN EACH DIRECTION EQUAL TO PLAN MOVEMENT PLUS 1" IN EACH DIRECTION. EXPANSION FITTING SHALL BE HEAVY DUTY WITH LIFETIME WARRANTY.

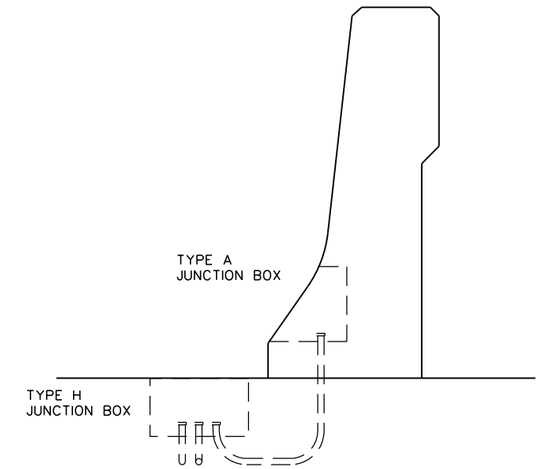

JUNCTION BOX IN PAVEMENT BY WALL

NOT TO SCALE

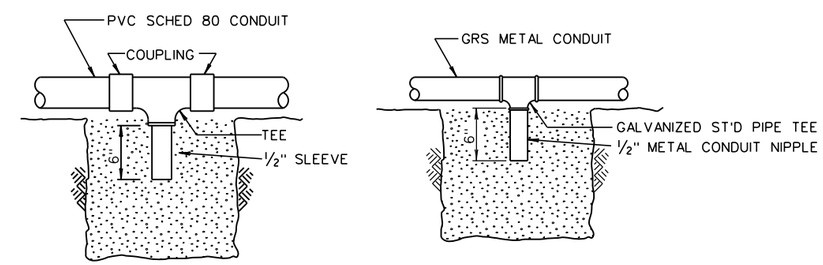

UNDERGROUND CONDUIT DRAINAGE DETAILS

NOT TO SCALE

NOTE

PROVIDE 2' LONG x 2' DEEP x TRENCH WIDTH AGGREGATE POCKET AND DRAIN AT LOW POINT OF CONDUIT RUN IF LOW POINT IS NOT IN A JUNCTION BOX.

WEST VIRGINIA DEPARTMENT OF TRANSPORTATION
DIVISION OF HIGHWAYS
STANDARD DETAIL

PREPARED: 8/2018

REVISION DATE

CONDUIT DETAILS

STANDARD SHEET TEL-31

TRAFFIC ENGINEERING DIVISION

12/19/2018

Z:\Projects\WVDOT\Standard Details vol II\New_Sheets\Lighting\TEL-31.dgn

J04C02C03-STDBOR c

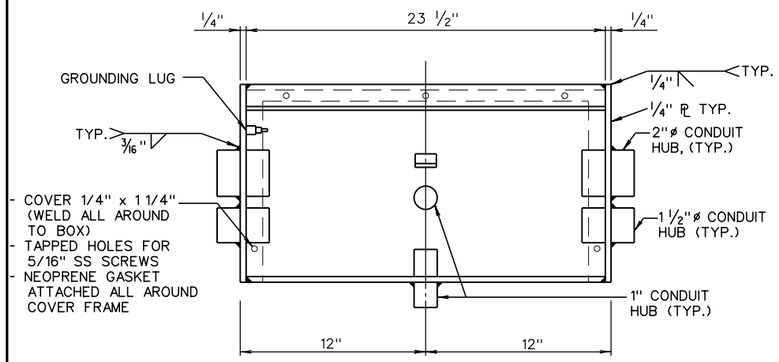

FRONT VIEW WITH COVER REMOVED

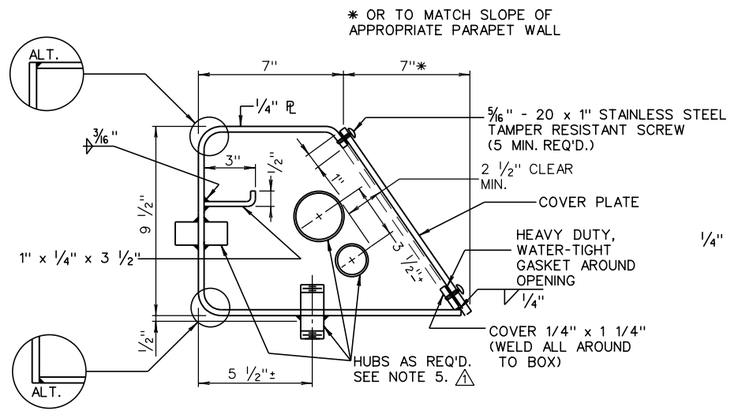

SIDE VIEW

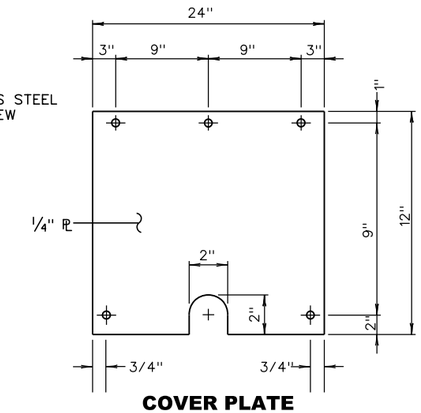

COVER PLATE

FOR N-J SHAPE WALL

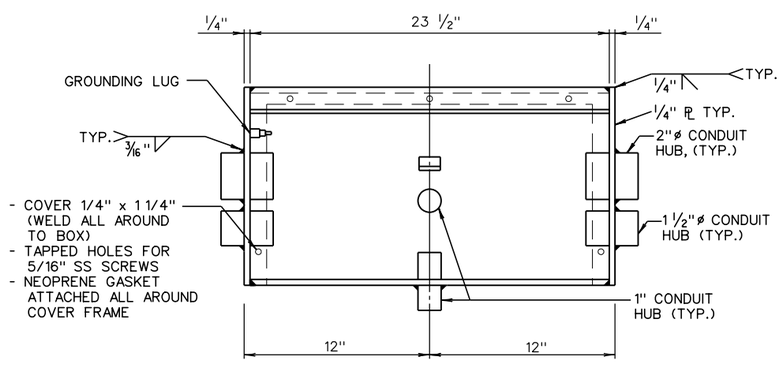

FRONT VIEW WITH COVER REMOVED

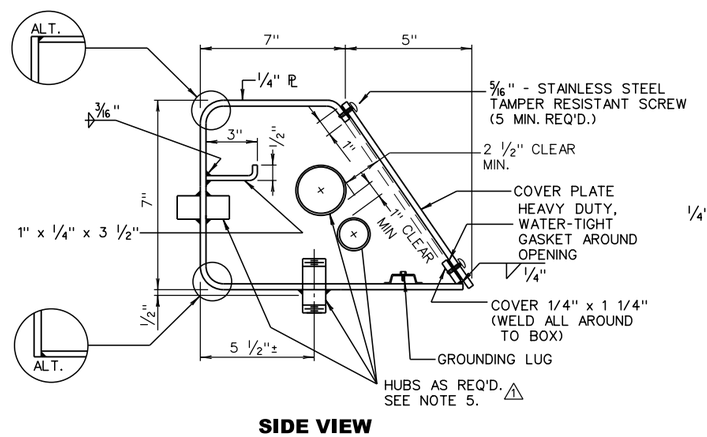

SIDE VIEW

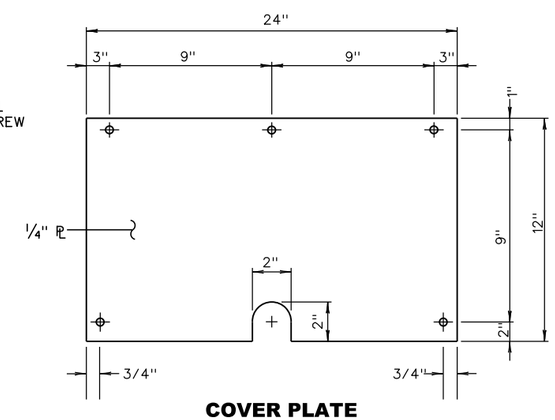

COVER PLATE

FOR F SHAPE WALL

GENERAL NOTES

1. TYPE A BOXES ARE TO BE FABRICATED FROM STEEL (1/8 IN. THICKNESS MIN.) AND HOT-DIPPED GALVANIZED AFTER ASSEMBLY.
2. REINFORCING STEEL THAT CONFLICTS WITH TYPE A BOX SHALL BE APPROPRIATELY MODIFIED AS SHOWN ON THE BRIDGE PLANS OR AS DIRECTED BY THE ENGINEER.
3. UNUSED CONDUIT TO BE FIELD CAPPED.
4. JUNCTION BOXES SHOULD BE NEMA 3R RATED.
5. △1 HUB SIZE AND NUMBER ARE TO BE AS REQUIRED FOR EACH SPECIFIC APPLICATION.

△1 ADDED NOTE 5.

WEST VIRGINIA DEPARTMENT OF TRANSPORTATION
DIVISION OF HIGHWAYS
STANDARD DETAIL

PREPARED: 8/2018

REVISION DATE
△1 4/2022

JUNCTION BOX DETAILS TYPE A

STANDARD SHEET TEL-41

TRAFFIC ENGINEERING DIVISION

J04C02C03-STDBDR c
8/17/2023
Z:\Projects\WVDOT\Standard Details vol II\Final Submittal\Revised DGNs\Revised 4-2022\TEL-41 Rev 4-2022.dgn

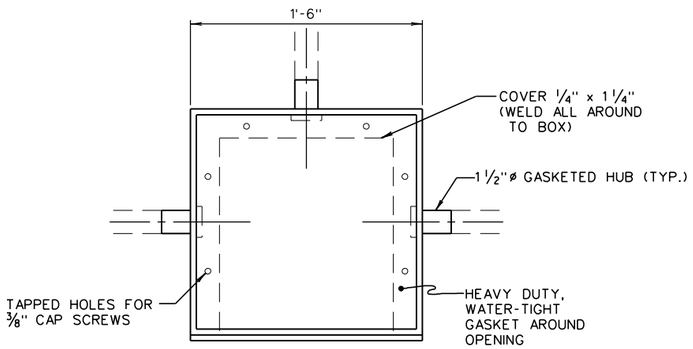

FRONT VIEW WITH COVER REMOVED

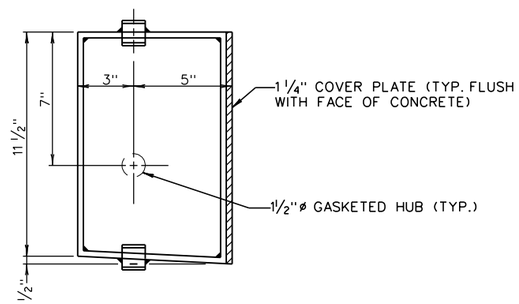

SIDE VIEW

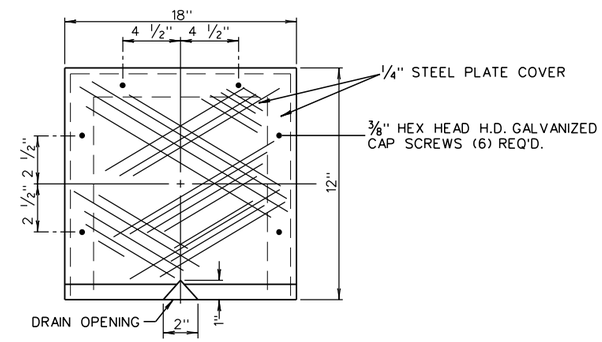

COVER PLATE

TYPE B JUNCTION BOX

GENERAL NOTES

1. TYPE A AND B BOXES ARE TO BE FABRICATED FROM STEEL (1/8 IN. THICKNESS MIN.) CONFORMING TO ASTM A-36 AND HOT-DIPPED GALVANIZED AFTER ASSEMBLY.
2. REINFORCING STEEL THAT CONFLICTS WITH TYPE A OR TYPE B BOXES SHALL BE APPROPRIATELY MODIFIED AS SHOWN ON THE BRIDGE PLANS OR AS DIRECTED BY THE ENGINEER.
3. TYPE C BOX IS TO BE FABRICATED FROM COMMERCIAL GRADE STEEL WITH WEATHER RESISTANT STEEL. TYPE C BOX SHALL INCLUDE STAINLESS STEEL PINS AND DOOR CLAMPS.
4. UNUSED CONDUIT TO BE FIELD CAPPED.
5. JUNCTION BOXES SHOULD BE NEMA 3R RATED.

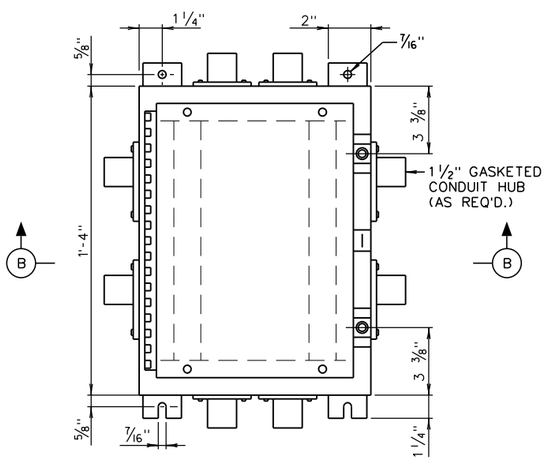

FRONT VIEW

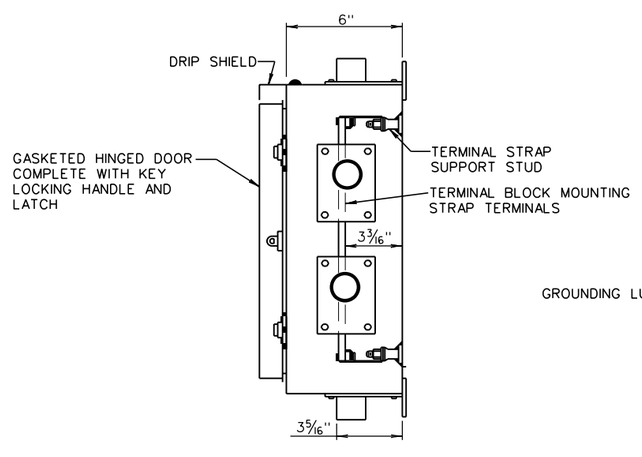

SIDE VIEW

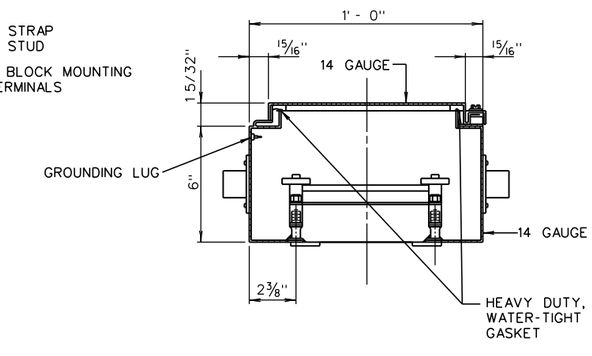

SECTION B - B

TYPE C JUNCTION BOX

WEST VIRGINIA DEPARTMENT OF TRANSPORTATION
DIVISION OF HIGHWAYS
STANDARD DETAIL

PREPARED: 8/2018
REVISION DATE

JUNCTION BOX DETAILS TYPES B & C

STANDARD SHEET TEL-42

TRAFFIC ENGINEERING DIVISION

12/19/2018

Z:\Projects\WVDOT\Standard Details vol II\New_Sheets\Lighting\TEL-42.dgn

J04C02C03-STDBOR c

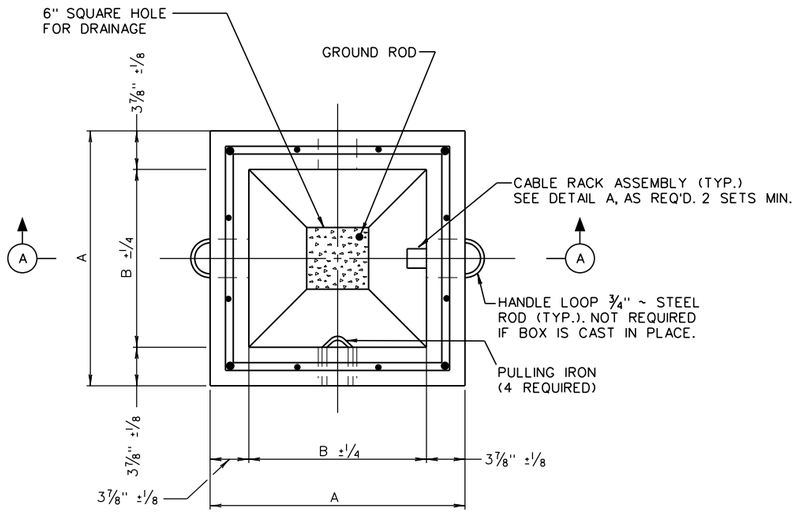

PLAN WITH COVER REMOVED

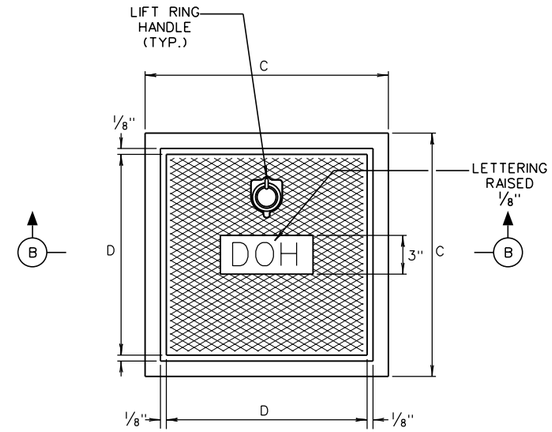

PLAN

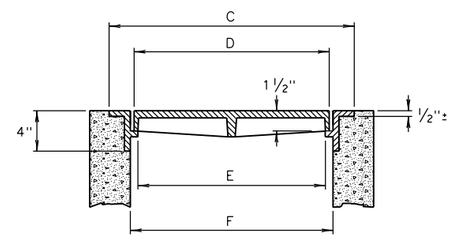

SECTION B-B

COVER AND FRAME

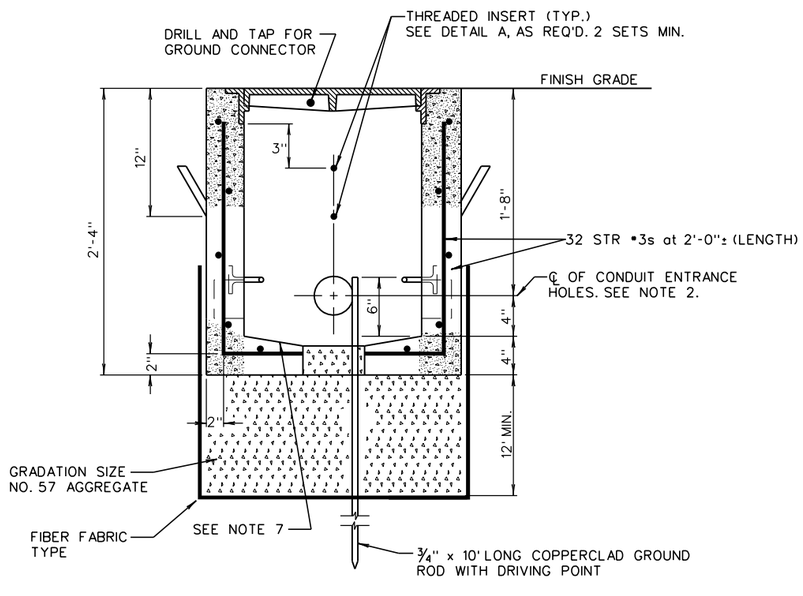

SECTION A-A

CONCRETE JUNCTION BOX

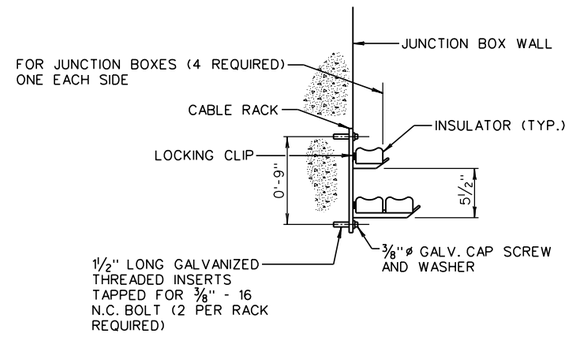

DETAIL A

CABLE RACK ASSEMBLY

NOTES

1. CONCRETE WHICH IS CAST IN PLACE SHALL MEET CLASS B. CONCRETE WHICH IS PRECAST SHALL HAVE A MINIMUM COMPRESSIVE STRENGTH OF 3000 PSI IN 28 DAYS AND AN AIR CONTENT OF 7+/-2 PERCENT.
2. ALL CONDUIT ENTRANCE HOLES TO BE THREE INCH DIAMETER WITH ONE INCH KNOCKOUT WALL. FOUR HOLES (MIN.) PER JUNCTION BOX ARE REQUIRED UNLESS NOTED OTHERWISE.
3. CONDUCTORS SHALL BE SUPPORTED ON CABLE RACKS IN JUNCTION BOXES. JUNCTION BOXES ARE TO HAVE END BELLS OR INSULATED BUSHINGS INSTALLED BEFORE ANY CABLE IS PULLED IN CONDUIT.
4. THIS JUNCTION BOX SHALL HAVE TYPE H-20 LOADING CAPACITY, BE WATERPROOF, AND THE COVER FRAME SHALL BE CAST INTEGRAL WITH THE CONCRETE BOX. CONTRACTOR SHALL INSTALL A HEAVY DUTY WATERPROOF GASKET AROUND THE LID. ALL PORTIONS OF THIS JUNCTION BOX SHALL MEET THE REQUIREMENTS OF SECTION 715.42.11.2 OF THE SPECIFICATIONS.
5. THE FRAME CASTINGS SHALL BE CAST IRON MEETING THE REQUIREMENTS OF SECTION 709.10 OF THE SPECIFICATIONS. THE COVER SHALL BE DUCTILE IRON MEETING ASTM A 536, GRADE 80-55-6, 65-45-12, OR 60-40-18.
6. METAL COVER SHALL BE GROUNDED.
7. FRAMES AND COVERS ARE SHOWN AS EXAMPLES ONLY. SHOP DRAWINGS SHALL BE SUBSMITTED IF DETAILS AND DIMENSIONS VARY.
8. BOTTOM OF JUNCTION BOXES SHALL BE SLOPED TO DRAIN HOLE.
9. FOR TYPE H, 10 IN. x 10 IN. SEE TES-50.
10. SEAL AROUND CONDUIT OPENINGS WITH GROUT, EPOXY, AND/OR HYDRAULIC CEMENT ON THE INSIDE AND OUTSIDE OF THE JUNCTION BOX TO MAKE IT WATERPROOF. FINISH THE INSIDE WALLS SO THEY ARE SMOOTH AND FINISHED FLUSH WITH THE ORIGINAL WALL.
11. SEE TEL-15B FOR ADDITIONAL GROUNDING REQUIREMENT DETAILS.

TYPE H JUNCTION BOXES						
BOX SIZE	A	B	C	D	E	F
18" X 18"	2'-4"	1'-8 1/4"	24"	20"	18"	20 1/4"
24" X 24"	2'-10"	2'-2 1/4"	30"	26"	24"	26 1/4"
36" X 36"	3'-10"	3'-2 1/4"	42"	38"	36"	38 1/4"

WEST VIRGINIA DEPARTMENT OF TRANSPORTATION
DIVISION OF HIGHWAYS
STANDARD DETAIL

PREPARED: 8/2018
REVISION DATE

JUNCTION BOX DETAILS TYPE H

STANDARD SHEET TEL-43

TRAFFIC ENGINEERING DIVISION

12/19/2018
Z:\Projects\WV001\Standard Details vol II\New_Sheets\Lighting\TEL-43.dgn
J04C02C03-STDBOR c

GENERAL NOTES

1. CONTRACTOR SHALL FURNISH AND INSTALL A COMPLETE NAVIGATION LIGHTING SYSTEM AS INDICATED ON THE PLANS. SEE WVDOH STANDARD SPECIFICATIONS SECTION 662.2.14, NAVIGATION LIGHTING SYSTEM FOR ADDITIONAL DETAILS.
2. NAVIGATION LIGHTING LAYOUT SHALL FOLLOW COAST GUARD LETTER AND/OR 33 CFR 118 FOR GUIDANCE.
3. ALL LAMPS SHALL BE LED AND RATED FOR 100,000 HOURS.

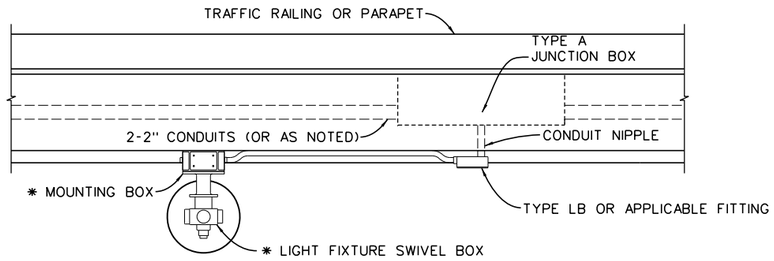

VIEW A-A

* SUPPLIED BY LIGHT MANUFACTURER

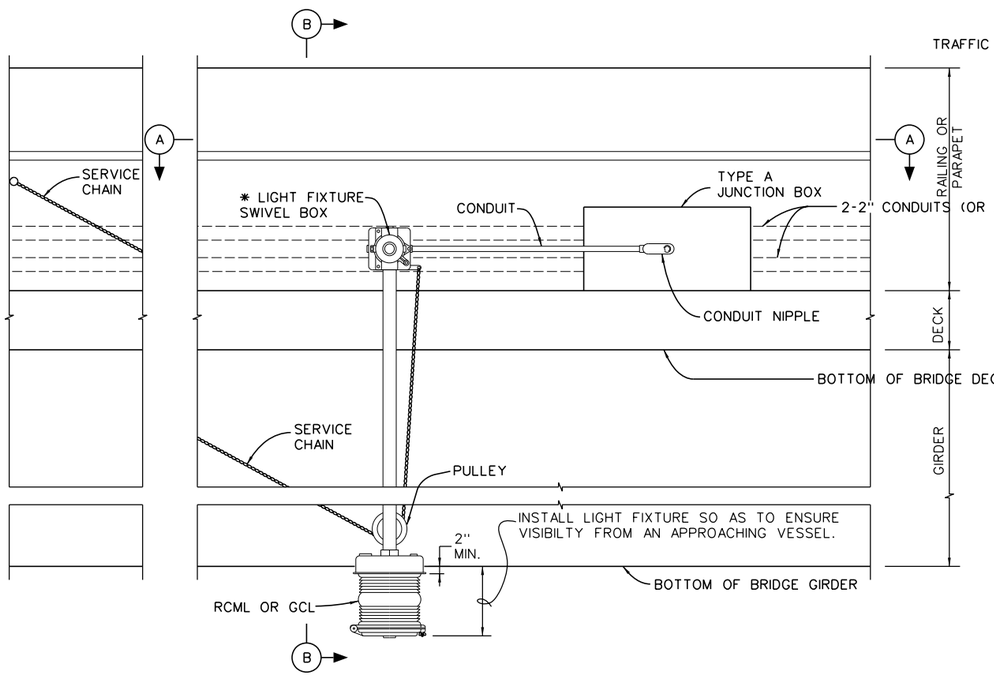

ELEVATION VIEW

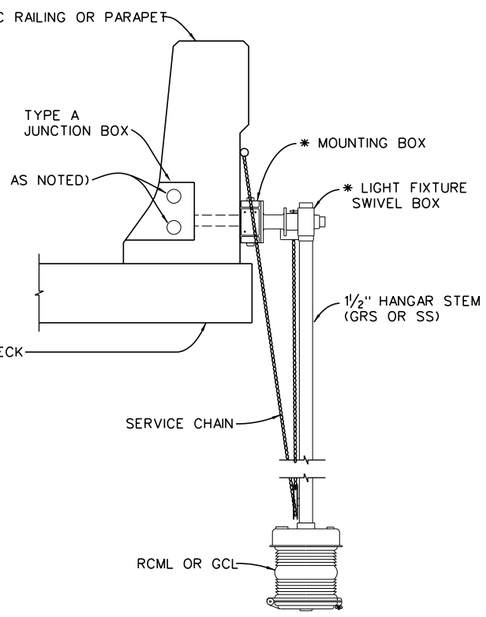

VIEW B-B

GCL OR RCL MOUNTING DETAILS (SCHEMATIC)

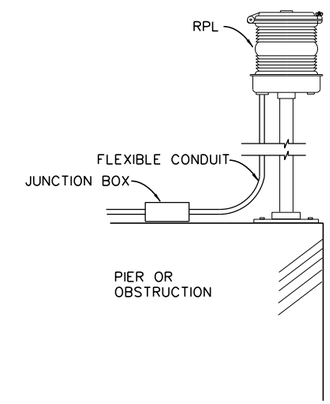

RPL MOUNTING DETAILS (SCHEMATIC)

KEY

GCL	360° GREEN CHANNEL LIGHT
RCML	180° RED CHANNEL MARGIN LIGHT
RPL	180° RED PIER LIGHT

WEST VIRGINIA DEPARTMENT OF TRANSPORTATION
DIVISION OF HIGHWAYS
STANDARD DETAIL

PREPARED: 8/2018
REVISION DATE

NAVIGATION LIGHTING DETAILS

STANDARD SHEET TEL-50

TRAFFIC ENGINEERING DIVISION

12/19/2018

Z:\Projects\WVDOT\Standard Details vol II\New_Sheets\Lighting\TEL-50.dgn

J04C02C03-STDBOR c

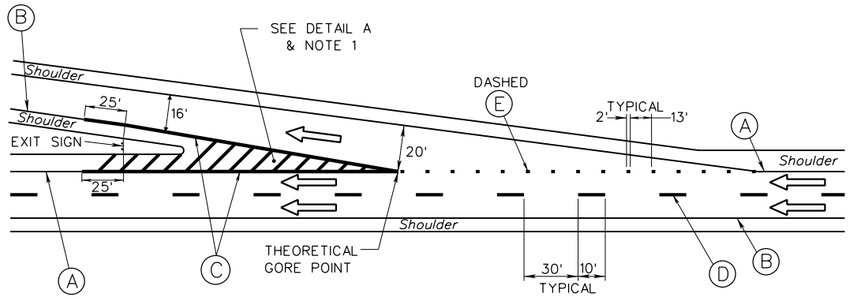

EXIT RAMP: STRAIGHT TAPERED DECELERATION LANE

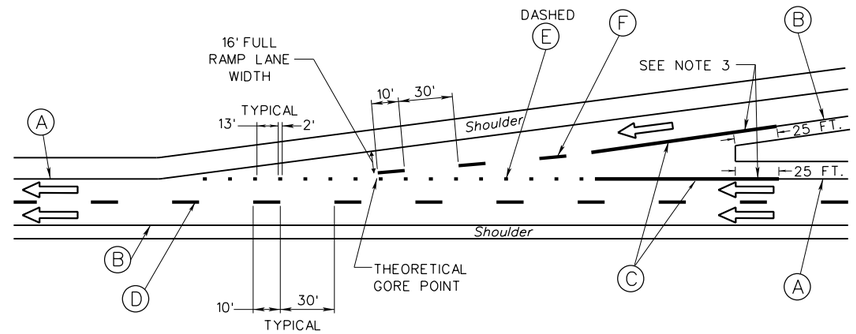

ENTRANCE RAMP: TAPERED ACCELERATION LANE

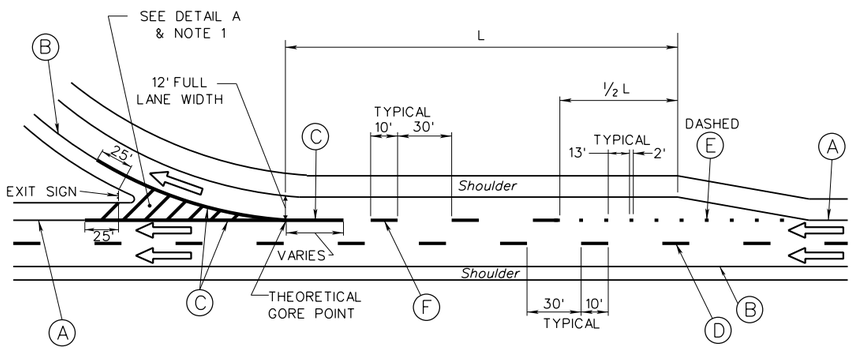

EXIT RAMP: PARALLEL DECELERATION LANE

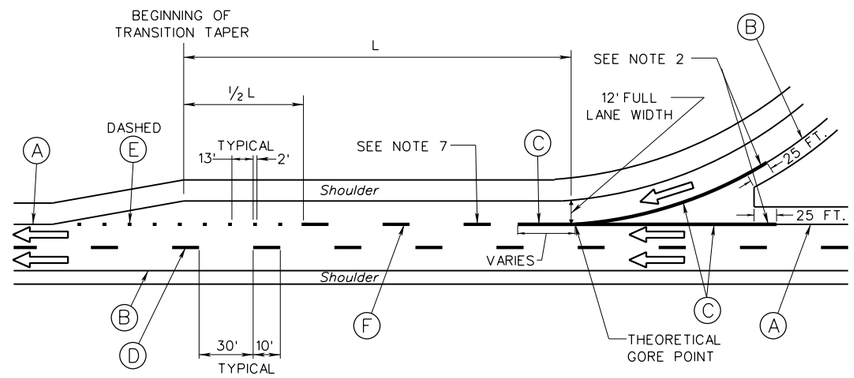

ENTRANCE RAMP: PARALLEL ACCELERATION LANE

NOTE:
THIS ARROW ONLY INDICATES DIRECTION OF TRAVEL.

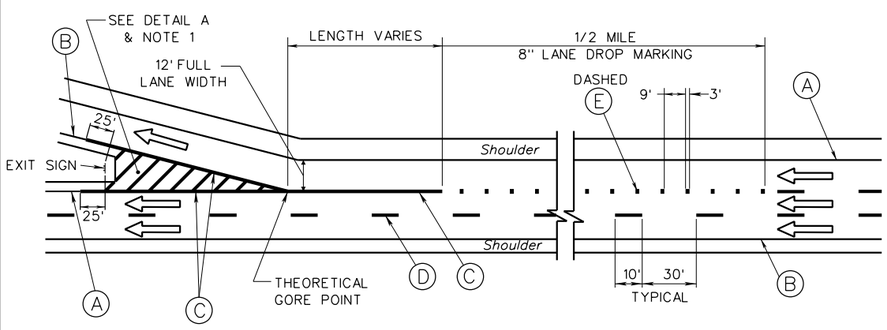

EXIT RAMP: LANE DROP

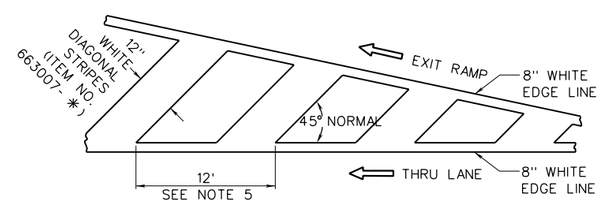

DETAIL A

GENERAL NOTES

1. THE 8 IN EDGE LINE SHALL BE EXTENDED TO A POINT APPROXIMATELY 25 FT BEYOND THE EXIT SIGN ON BOTH SIDES OF THE GORE.
2. THE 8 IN EDGE LINE ON BOTH SIDES OF THE ENTRANCE RAMP GORE SHALL BE PLACED BEGINNING AT A POINT APPROXIMATELY 25 FT BEFORE THE POINT WHERE THE RAMP AND MAINLINE SHOULDER AREAS JOIN AND EXTEND TO AN APPROPRIATE POINT BEYOND WHERE THE 8 IN LINES MERGE INTO ONE LINE.
3. THE 8 IN EDGE LINE ON BOTH SIDES OF THE ENTRANCE RAMP GORE SHALL BE PLACED BEGINNING AT A POINT APPROXIMATELY 25 FT BEFORE THE POINT WHERE THE RAMP AND MAINLINE SHOULDER AREAS JOIN AND EXTEND FOR APPROXIMATELY ONE-HALF THE LENGTH TO THE THEORETICAL GORE POINT.
4. MARKINGS SHOWN ON THE CONTRACT PLANS OR DIRECTED TO BE INSTALLED BY THE PROJECT ENGINEER SHALL TAKE PRECEDENCE OVER THE DETAILS SHOWN ON THIS SHEET.
5. THIS DIMENSION SHALL BE 12 FEET UNLESS OTHERWISE SPECIFIED.
6. ALL MATERIALS UTILIZED SHALL BE IN COMPLIANCE WITH THE PROJECT PLANS. IF NOT SPECIFIED IN PROJECT PLANS, ALL MATERIALS SHALL BE IN COMPLIANCE WITH THE STANDARD SPECIFICATIONS.
7. IF THE LENGTH OF THE ACCELERATION LANE FROM THE END OF THE THEORETICAL GORE POINT EDGE LINE EXTENSION TO THE BEGINNING OF THE TRANSITION TAPER IS LESS THAN 500', THE 8 IN. LANE LINE (F) SHOWN BETWEEN THE RAMP AND MAINLINE SHALL BE OMITTED AND REPLACED WITH A DASHED LANE LINE (E).
8. NORMALLY, THE MAXIMUM LANE WIDTH SHALL BE 12 FT. SINGLE LANE RAMP WIDTHS SHALL BE 16 FT.

LEGEND

(A)-ITEM 663001-✳ , EDGE LINE (6" WHITE)
(B)-ITEM 663001-✳ , EDGE LINE (6" YELLOW)
(C)-ITEM 663001-✳ , EDGE LINE (8" WHITE)
(D)-ITEM 663002-✳ , LANE LINE (6")
(E) & (F)-ITEM 663002-✳ , LANE LINE (8")

WEST VIRGINIA DEPARTMENT OF TRANSPORTATION
DIVISION OF HIGHWAYS
STANDARD DETAIL

PREPARED: 8/2018
REVISION DATE

TYPICAL MARKINGS OF INTERCHANGE RAMPS

STANDARD SHEET TEM-1

TRAFFIC ENGINEERING DIVISION

12/19/2018

Z:\Projects\WVDOT\Standard Details val II\New_Sheets\Marking\TEM-1.dgn

J04C02C03-STDBOR c

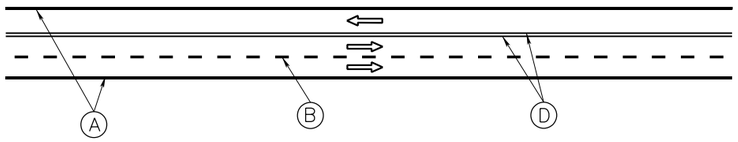

(A) TWO WAY MARKING, TRUCK CLIMBING LANE

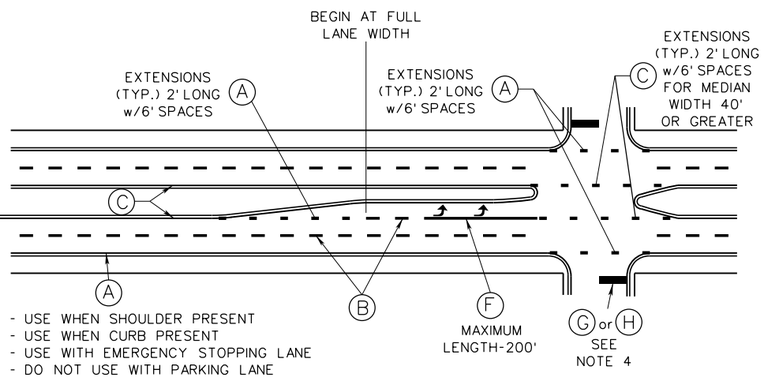

(C) DIVIDED HIGHWAY WITH MEDIAN

NOTE:
ENTIRE RAILROAD MARKING, (INCLUDES THE TWO "R"s AND THE LARGE "X"). TO BE PAID UNDER ITEM 663015-✳. FOR MORE DETAILS SEE TEM-3.

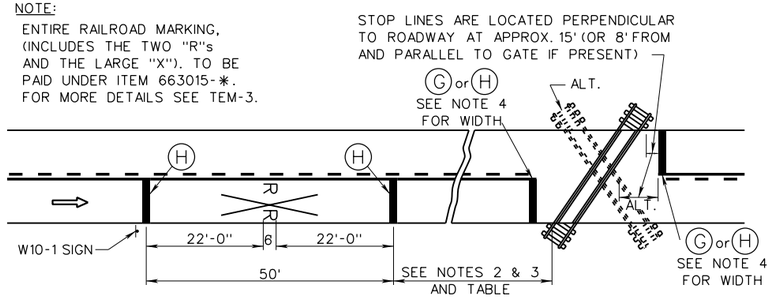

(E) TWO WAY MARKING, RAILROAD-HIGHWAY GRADE CROSSINGS

RAILROAD CROSSING MARKING DISTANCE TABLE

POSTED OR 85TH PERCENTILE TRAFFIC SPEED	DISTANCE FROM NEAR RAIL TO MARKING
20	100 ✳✳
25	100 ✳✳
30	100
35	100
40	125
45	175
50	250
55	325
60	400

NOTE:
VALUES SHOWN ARE FOR GUIDANCE. ENGINEERING JUDGEMENT IS TO BE USED IN DETERMINING THE MARKING PLACEMENT TO ASSURE EFFECTIVENESS.

✳✳ - THIS DISTANCE MAY BE REDUCED TO A MINIMUM OF 50' DEPENDING UPON LOCAL CONDITIONS. A MINIMUM OF 100' IS GENERALLY NECESSARY FOR THE EFFECTIVE DISPLAY OF PAVEMENT MARKINGS. IF THE 100' MINIMUM CANNOT BE OBTAINED, MARKINGS MAY BE OMITTED.

GENERAL NOTES

1. BROKEN LINES SHALL BE 10 FEET IN LENGTH WITH 30 FEET SPACINGS, UNLESS OTHERWISE SPECIFIED. THE RATIO OF PAINTED LINE LENGTH TO SKIP LENGTH SHALL BE 1 TO 3.

2. THE DISTANCE FROM THE RAILROAD CROSSING MARKING TO THE NEAREST TRACK WILL VARY ACCORDING TO THE APPROACH SPEED AND THE SIGHT DISTANCE OF THE VEHICULAR TRAFFIC APPROACHING, BUT SHOULD NOT BE LESS THAN 50 FEET. ALSO SEE TABLE.

3. ALL RAILROAD MARKINGS AND STOP LINES SHALL BE WHITE. ON MULTI-LANE ROADS THE STOP LINES SHALL EXTEND ACROSS ALL APPROACH LANES, AND INDIVIDUAL RAILROAD SYMBOLS SHALL BE USED IN EACH APPROACH LANE.

4. STOP LINES SHALL BE 12 INCHES IN WIDTH UNLESS ONE OF THE FOLLOWING CONDITIONS ARE MET, IN WHICH CASE THE WIDTH SHALL BE 24 INCHES:
   - THE STOP LINE IS ON THE APPROACH TO A SIGNALIZED INTERSECTION;
   - THE STOP LINE IS AT THE END OF AN INTERSTATE OR EXPRESSWAY INTERCHANGE EXIT RAMP;
   - THE POSTED SPEED LIMIT OF THE ROADWAY THAT THE STOP LINE IS PLACED IS 45 MPH OR GREATER.

   STOP LINES SHOULD BE PLACED 4 FEET IN ADVANCE OF AND PARALLEL TO THE NEAREST CROSSWALK LINE. THE STOP LINE SHOULD BE PLACED AT THE DESIRED STOPPING POINT, BUT IN NO CASE MORE THAN 30 FEET OR LESS THAN 4 FEET FROM THE NEAREST EDGE OF THE INTERSECTING TRAVELED WAY.

5. ON TWO-WAY, TWO OR THREE LANE ROADWAYS WHERE CENTER LINE MARKINGS ARE INSTALLED, NO-PASSING ZONES SHALL BE ESTABLISHED AT VERTICAL AND HORIZONTAL CURVES AND OTHER LOCATIONS WHERE AN ENGINEERING STUDY INDICATES THAT PASSING MUST BE PROHIBITED BECAUSE OF INADEQUATE SIGHT DISTANCES OR OTHER SPECIAL CONDITIONS.
   NO PASSING ZONE MARKINGS SHALL BE USED AT HORIZONTAL OR VERTICAL CURVES WHERE THE PASSING SIGHT DISTANCE IS LESS THAN THE MINIMUM SHOWN IN THE TABLE BELOW FOR THE 85TH-PERCENTILE SPEED OR THE POSTED OR STATUTORY SPEED LIMIT. THE PASSING SIGHT DISTANCE ON A VERTICAL CURVE IS THE DISTANCE AT WHICH AN OBJECT 3.5 FEET ABOVE THE PAVEMENT SURFACE CAN BE SEEN FROM A POINT 3.5 FEET ABOVE THE PAVEMENT. SIMILARLY, THE PASSING SIGHT DISTANCE ON A HORIZONTAL CURVE IS THE DISTANCE MEASURED ALONG THE CENTER LINE (OR RIGHT-HAND LANE LINE OF A THREE LANE ROADWAY) BETWEEN TWO POINTS 3.5 FEET ABOVE THE PAVEMENT ON A LINE TANGENT TO THE EMBANKMENT OR OTHER OBSTRUCTION THAT CUTS OFF THE VIEW ON THE INSIDE OF THE CURVE.

85TH-PERCENTILE SPEED OR THE POSTED OR STATUTORY SPEED LIMIT (MPH)	MINIMUM PASSING SIGHT DISTANCE(FT)
25	450
30	500
35	550
40	600
45	700
50	800
55	900

   NO-PASSING ZONES SHALL BE MARKED EITHER ONE DIRECTION NO-PASSING ZONE OR TWO DIRECTION NO-PASSING. NO-PASSING ZONE MARKINGS SHALL BE USED ON TWO-WAY ROADWAYS AT LANE REDUCTION TRANSITIONS AND ON APPROACHES TO OBSTRUCTIONS THAT MUST BE PASSED ON THE RIGHT. WHERE THE DISTANCE BETWEEN SUCCESSIVE NO-PASSING ZONES IS LESS THAN 400 FEET, NO-PASSING MARKINGS SHALL CONNECT THE ZONES. NO PASSING ZONE MARKINGS SHALL BE USED ON APPROACHES TO GRADE CROSSING AS SHOWN ON DETAIL E. SEE THE MUTCD FOR FURTHER GUIDANCE RELATED TO ESTABLISHING NO-PASSING ZONE MARKINGS.

6. THE SPACING BETWEEN ADJACENT YELLOW CENTERLINE MARKINGS SHALL BE EQUAL TO THE LINE WIDTHS.

7. ALL LONGITUDINAL MARKINGS SHALL BE OFFSET FROM THE PAVEMENT JOINTS AS SPECIFIED IN THE STANDARD SPECIFICATIONS.

8. NORMALLY, THE MAXIMUM LANE WIDTH SHALL BE 12 FEET. SINGLE LANE RAMP WIDTHS SHALL BE 16 FEET.

9. LEFT TURN MOVEMENTS MAY BE GUIDED BY DASHED YELLOW LINES 2 FEET LONG WITH 6 FEET SPACES WHERE ENGINEERING JUDGEMENT DETERMINES THAT SUCH ADDITIONAL MARKINGS ARE NEEDED. THE WIDTH OF THE DASHES SHALL BE EQUAL TO THE WIDTH OF THE LINE THAT THE DASHES ORIGINATE FROM.

10. A TWO-WAY LEFT TURN LANE-USE ARROW PAVEMENT MARKING, WITH OPPOSING ARROWS SPACED AS SHOWN, SHALL BE PLACED AT OR JUST DOWNSTREAM FROM THE BEGINNING OF THE TWO-WAY LEFT TURN LANE ON EACH END. ADDITIONAL TWO-WAY LEFT TURN LANE-USE ARROW MARKINGS MAY BE USED AT OTHER LOCATIONS ALONG A TWO-WAY LEFT TURN LANE WHERE ENGINEERING JUDGEMENT DETERMINES THAT SUCH ADDITIONAL MARKINGS ARE NEEDED TO EMPHASIZE THE PROPER USE OF THE LANE.

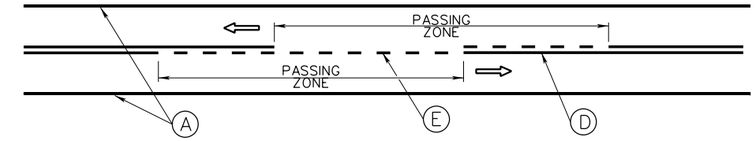

(B) TWO WAY MARKING FOR PASSING ZONE
(SEE NOTE 5)

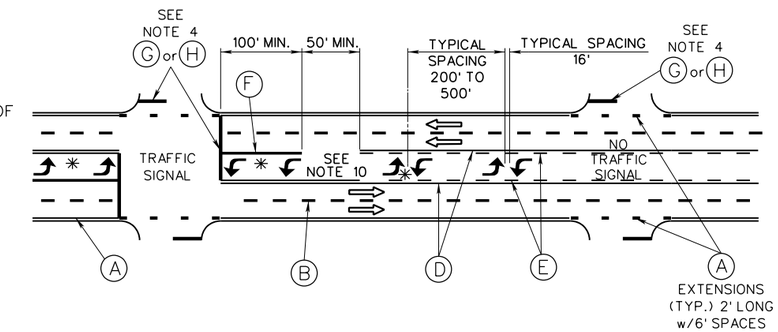

(D) MULTI-LANE HIGHWAY WITH TWO-WAY LEFT TURN CHANNELIZATION

NOTE:
✳ REQUIRED LANE-USE MARKINGS. ALL OTHER LANE USE ARROWS SHOWN ON THIS SHEET ARE OPTIONAL AS CALLED FOR ON PLANS.

NOTE:
⇦ THIS ARROW ONLY INDICATES DIRECTION OF TRAVEL.

LEGEND

- (A)-ITEM 663001-✳, EDGE LINE (6" WHITE)
- (B)-ITEM 663002-✳, LANE LINE (6" WHITE)
- (C)-ITEM 663001-✳, EDGE LINE (6" YELLOW)
- (D)-ITEM 663002-✳, CENTERLINE (6" YELLOW)
- (E)-ITEM 663002-✳, CENTERLINE (6" YELLOW)
- (F)-ITEM 663004-✳, CHANNELIZING LINE (TYPE V, 8")
- (G)-ITEM 663005-✳, STOP LINE (12")
- (H)-ITEM 663005-✳, STOP LINE (24")
- (I)-ITEM 663002-✳, LANE LINE (8" DASHED)

WEST VIRGINIA DEPARTMENT OF TRANSPORTATION
DIVISION OF HIGHWAYS
STANDARD DETAIL

PREPARED: 8/2018
REVISION DATE

TYPICAL PAVEMENT MARKINGS

(SHEET 1 of 2)

STANDARD SHEET TEM-2

TRAFFIC ENGINEERING DIVISION

12/19/2018

Z:\Projects\WVDOT\Standard Details vol II\New_Sheets\Marking\TEM-2-1.dgn

J04C02C03-STDBOR c

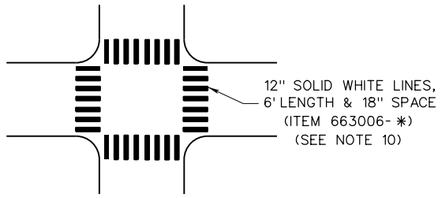

(F) TYPE V PARALLEL CROSSWALK LINE DETAILS
(OFFSET MARKINGS AS REQUIRED IN ORDER TO AVOID WHEEL TRACKING AREAS)

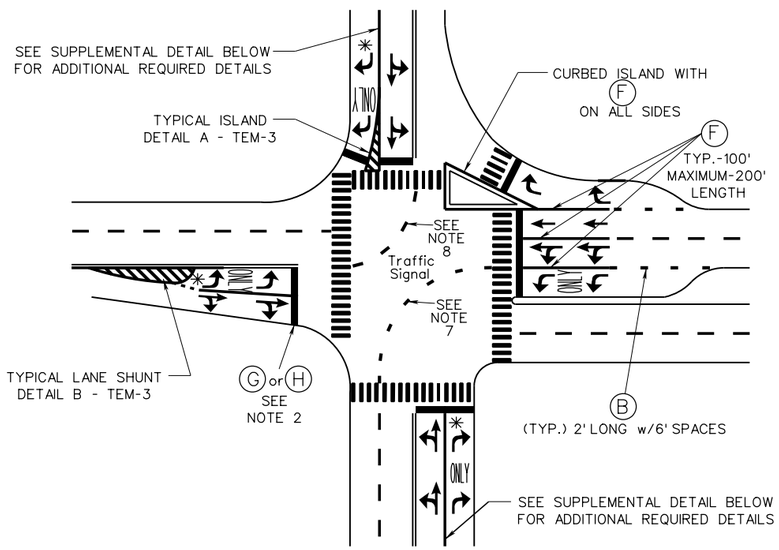

NOTE: IF A RAILROAD CROSSING IS CLOSE TO THE INTERSECTION PLACE ARROWS SO THAT DRIVERS ARE NOT DIRECTED ONTO TRACKS.

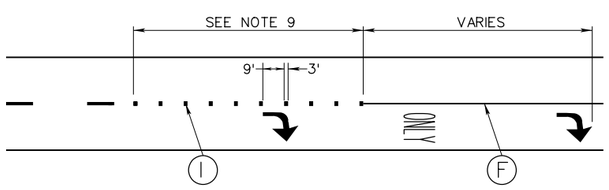

SUPPLEMENTAL DETAIL
MANDATORY TURN LANE MARKINGS

(H) TYPICAL INTERSECTIONS MARKINGS

NOTE:
✳ ALL LANE USE MARKINGS SHOWN IN THIS LANE ARE REQUIRED. ALL OTHER LANE USE ARROWS SHOWN ON THIS SHEET ARE OPTIONAL AS CALLED FOR ON PLANS.

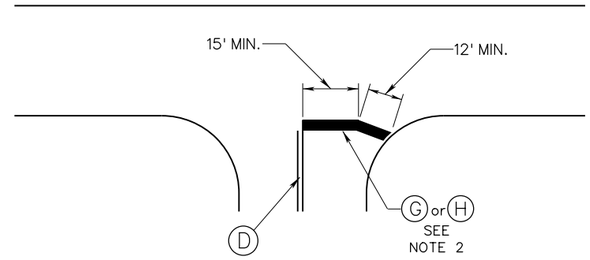

(G) METHODOLOGY FOR INSTALLING (BENDING) STOP LINES AT WIDE THROATED INTERSECTIONS

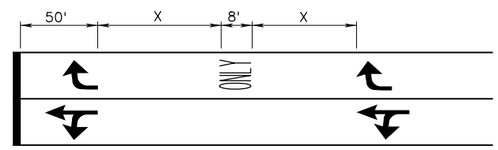

X- 32' WHEN OPERATING SPEED IS 40 MPH AND BELOW
X- 80' WHEN OPERATING SPEED IS ABOVE 40 MPH

(I) TYPICAL LANE-USE MARKING SPACING

NOTE:
⟸ THIS ARROW ONLY INDICATES DIRECTION OF TRAVEL.

LEGEND

- (A)-ITEM 663001-✳, EDGE LINE (6" WHITE)
- (B)-ITEM 663002-✳, LANE LINE (6" WHITE)
- (C)-ITEM 663001-✳, EDGE LINE (6" YELLOW)
- (D)-ITEM 663002-✳, CENTERLINE (6" YELLOW)
- (E)-ITEM 663002-✳, CENTERLINE (6" YELLOW)
- (F)-ITEM 663004-✳, CHANNELIZING LINE (8", TYPE V)
- (G)-ITEM 663005-✳, STOP LINE (12")
- (H)-ITEM 663005-✳, STOP LINE (24")
- (I)-ITEM 663002-✳, LANE LINE (8" DASHED)

GENERAL NOTES

1. BROKEN LINES SHALL BE 10 FEET IN LENGTH WITH 30 FEET SPACES, UNLESS OTHERWISE SPECIFIED. THE RATIO OF PAINTED LINE LENGTH TO SKIP LENGTH SHALL BE 1 TO 3.

2. STOP LINES SHALL BE 12 INCHES IN WIDTH UNLESS ONE OF THE FOLLOWING CONDITIONS ARE MET, IN WHICH CASE THE WIDTH SHALL BE 24 INCHES:
   - THE STOP LINE IS ON THE APPROACH TO A SIGNALIZED INTERSECTION;
   - THE STOP LINE IS AT THE END OF AN INTERSTATE OR EXPRESSWAY INTERCHANGE EXIT RAMP;
   - THE POSTED SPEED LIMIT OF THE ROADWAY THAT THE STOP LINE IS PLACED IS 45 MPH OR GREATER.

   STOP LINES SHOULD BE PLACED 4 FEET IN ADVANCE OF AND PARALLEL TO THE NEAREST CROSSWALK LINE. THE STOP LINE SHOULD BE PLACED AT THE DESIRED STOPPING POINT, BUT IN NO CASE MORE THAN 30 FEET OR LESS THAN 4 FEET FROM THE NEAREST EDGE OF THE INTERSECTING TRAVELED WAY.

3. SUPPLEMENTAL PAVEMENT WORD AND/OR SYMBOL MARKINGS SHOULD BE LIMITED TO NOT MORE THAN A TOTAL OF THREE LINES OF INFORMATION (WORDS AND/OR SYMBOLS). THEY SHALL BE WHITE IN COLOR. LETTERS, SYMBOLS AND NUMERALS SHALL BE A MINIMUM OF 8 FEET IN HEIGHT. THE WORD MARKING "ONLY" AND THE ARROW SHALL BE USED WHERE A MOVEMENT THAT WOULD OTHERWISE BE LEGAL IS TO BE PROHIBITED. THE SPACE BETWEEN LINES SHOULD BE AT LEAST FOUR TIMES THE HEIGHT OF THE CHARACTERS FOR LOW SPEEDS BUT NOT MORE THAN TEN TIMES THE HEIGHT OF THE CHARACTERS UNDER ANY CONDITIONS. LOCATION OF SUPPLEMENTAL PAVEMENT MARKINGS SHALL BE AS SHOWN OR AS DIMENSIONED ON THE PLANS.

4. THE SPACING BETWEEN ADJACENT YELLOW CENTERLINE MARKINGS SHALL BE EQUAL TO THE LINE WIDTHS.

5. ALL LONGITUDINAL MARKINGS SHALL BE OFFSET FROM THE PAVEMENT JOINTS AS SPECIFIED IN THE STANDARD SPECIFICATIONS.

6. NORMALLY, THE MAXIMUM LANE WIDTH SHALL BE 12 FEET. SINGLE LANE RAMP WIDTHS SHALL BE 16 FEET.

7. △1 DUAL LEFT TURN LANES SHALL BE SEPARATED BY DASHED WHITE LINES 2 FEET LONG WITH 6 FEET SPACES. THE WIDTH OF THE DASHES SHALL BE EQUAL TO THE WIDTH OF THE LINE THAT THE DASHES ORIGINATE FROM. THESE LINES SHALL BE TYPE V.

8. △1 LEFT TURN MOVEMENTS MAY BE GUIDED BY DASHED YELLOW LINES 2 FEET LONG WITH 6 FEET SPACES WHERE ENGINEERING JUDGEMENT DETERMINES THAT SUCH ADDITIONAL MARKINGS ARE NEEDED. THE WIDTH OF THE DASHES SHALL BE EQUAL TO THE WIDTH OF THE LINE THAT THE DASHES ORIGINATE FROM. THESE LINES SHALL BE TYPE V.

9. IF THE DISTANCE BETWEEN THE PRECEDING INTERSECTION AND THE APPROACH INTERSECTION IS 1 MILE OR LESS, THE DASHED LANE LINE SHALL BE EXTENDED BACK TO THE PRECEDING INTERSECTION. OTHERWISE, THE DASHED LANE LINE SHOULD BEGIN A DISTANCE IN ADVANCE OF THE INTERSECTION AS DETERMINED BY ENGINEERING JUDGEMENT AS BEING SUITABLE TO ENABLE DRIVERS WHO DO NOT DESIRE TO MAKE THE MANDATORY TURN TO MOVE OUT OF THE LANE BEING DROPPED PRIOR TO REACHING THE QUEUE OF VEHICLES THAT ARE WAITING TO MAKE THE TURN. THE DASHED LANE LINE SHOULD BEGIN NO CLOSER TO THE INTERSECTION THAN THE MOST UPSTREAM REGULATORY OR WARNING SIGN ASSOCIATED WITH THE LANE DROP.

10. THE TYPE V MATERIAL USED FOR CROSSWALK MARKINGS SHALL BE ENHANCED SKID RESISTANT MATERIAL, AS CATEGORIZED ON THE DIVISION'S APL FOR TYPE V MATERIALS. ENHANCED SKID RESISTANT MATERIAL SHALL ALSO BE USED FOR OTHER TYPE V MARKINGS WHEN INDICATED IN THE PROJECT PLANS.

△1 SPECIFIED TYPE V MARKINGS

WEST VIRGINIA DEPARTMENT OF TRANSPORTATION
DIVISION OF HIGHWAYS
STANDARD DETAIL

PREPARED: 8/2018
REVISION DATE
△1 4/2022

TYPICAL PAVEMENT MARKINGS

(SHEET 2 of 2)

STANDARD SHEET TEM-2

TRAFFIC ENGINEERING DIVISION

Z:\Projects\WVDOT\Standard Details vol II\Final Submittal\Revised DGNs\Revised 4-2022\TEM-2-2 Rev 4-2022.dgn
8/17/2023
J04C02C03-STDBDR c

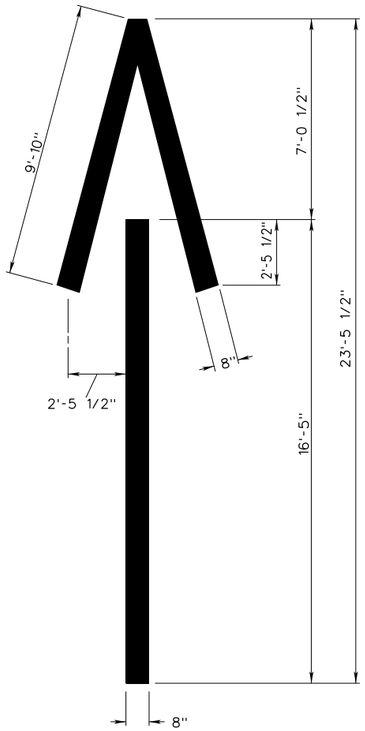

RAMP WRONG WAY ARROW
SEE NOTE 7

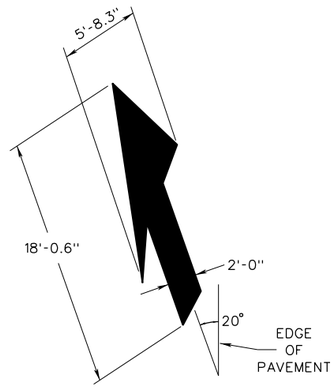

LANE REDUCTION ARROW

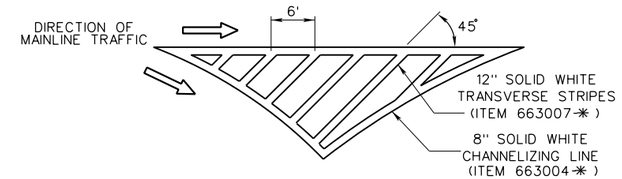

(A) TYPICAL PAINTED ISLAND

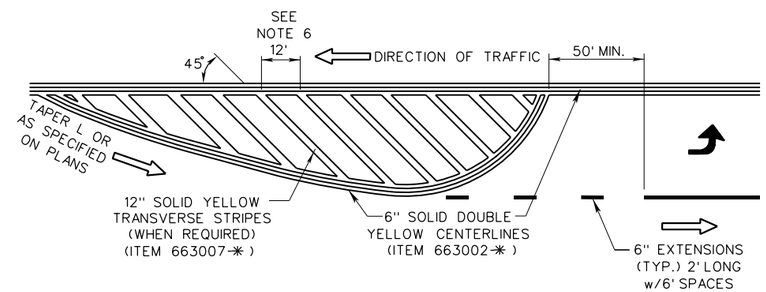

(B) TYPICAL LANE SHUNT - UNDIVIDED HIGHWAY

GENERAL NOTES

1. LOCATION OF WORDS AND SYMBOLS SHALL BE AS SHOWN ON THE PLANS OR AS OTHERWISE SPECIFIED.
2. TYPICAL PLACEMENT OF WORD AND SYMBOL MARKING IS SHOWN ON STANDARD SHEET TEM-2.
3. IF MESSAGES ON PAVEMENT CONSIST OF MORE THAN ONE WORD IT SHOULD BE READ "UP", THAT IS THE FIRST WORD SHOULD BE NEAREST THE DRIVER.
4. ALL WORD AND SYMBOL MARKING SHALL BE WHITE IN COLOR. (EXCEPTION: MARKINGS VISIBLE ONLY TO TRAFFIC PROCEEDING IN THE WRONG DIRECTION MAY BE RED).
5. WORD AND SYMBOL MARKING SHALL BE MADE OF TYPE V MATERIAL AS INDICATED ON THE CONTRACT PLANS. ENHANCED SKID RESISTANT TYPE V MATERIAL SHALL BE USED WHEN SPECIFIED.
6. THIS DIMENSION SHALL BE 12 FEET UNLESS OTHERWISE SPECIFIED. IN NO CASE SHALL THIS DIMENSION BE LESS THAN 8 FEET OR GREATER THAN 12 FEET.
7. WHERE LENGTH WILL PERMIT, TWO (2) FREEWAY RAMP ARROWS SHALL BE PLACED ON EXIT RAMPS. THE NO. 1 ARROW SHOULD BE PLACED NEAR THE INTERSECTION OF THE RAMP AND THE INTERSECTING CROSSROAD (50 FT MIN.), BUT PRIOR TO THE BEGINNING OF ANY LANE SEPARATION CHANNELIZING LINES AT THE END OF THE RAMP. THE NO. 2 ARROW SHOULD BE PLACED NOT LESS THAN 100 FEET, BUT NOT MORE THAN 250 FEET PRIOR TO THE NO. 1 ARROW WITH 150-200 FEET DESIRABLE. THE NO. 2 ARROW SHALL NOT BE PLACED ON THE RAMP IN FRONT OF "EXIT" SIGN. ARROWS SHOULD BE LOCATED IN THE FIELD WITHIN LIMITS MENTIONED ABOVE, TAKING ADVANTAGE OF RAMP GRADE AND ALIGNMENT. ARROW SHALL BE CENTERED BETWEEN THE EDGE LINES, AND SHALL POINT IN THE DIRECTION OF THE INTENDED TRAFFIC FLOW.

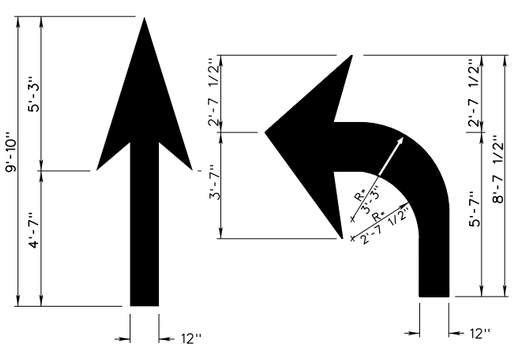

ONE DIRECTIONAL

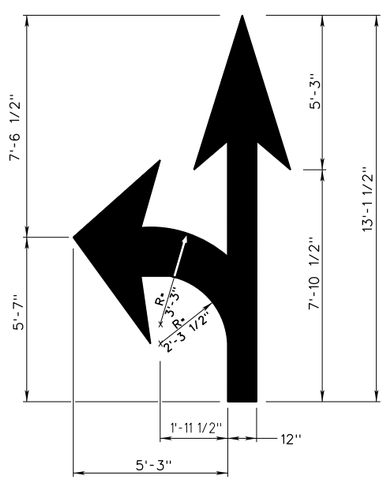

MULTI-DIRECTIONAL

LANE ASSIGNMENT ARROWS

TYPICAL PAVEMENT MARKING ARROWS
(ITEM 663010-✳)

TAPER L DIMENSIONS

FOR SPEEDS 45 MPH OR MORE
$L = S \times W$
FOR SPEEDS 40 MPH OR LESS
$L = \frac{WS^2}{60}$

WHERE:
L = LENGTH IN FEET
S = 85TH PERCENTILE SPEED IN MPH
W = OFFSET WIDTH IN FEET

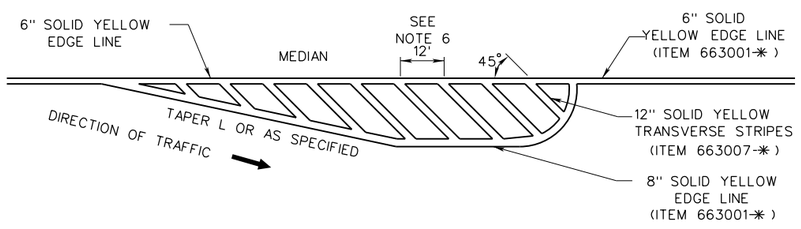

(C) TYPICAL LANE SHUNT - DIVIDED HIGHWAY

WEST VIRGINIA DEPARTMENT OF TRANSPORTATION
DIVISION OF HIGHWAYS
STANDARD DETAIL

PREPARED: 8/2018
REVISION DATE

CHANNELIZATION, WORD AND SYMBOL MARKINGS

(SHEET 1 of 3)

STANDARD SHEET TEM-3

TRAFFIC ENGINEERING DIVISION

12/19/2018

Z:\Projects\WVDOT\Standard Details vol II\New_Sheets\Working\TEM-3-1.dgn

J04C02C03-STDBOR c

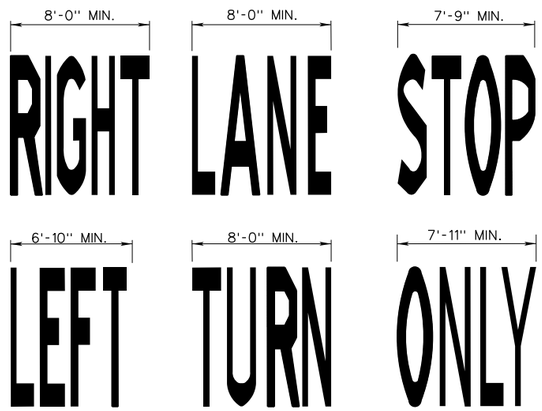

ALL LETTERS SHALL HAVE A MIN. HEIGHT OF 8'-0"

TYPICAL PAVEMENT MARKING LEGENDS
(ITEM 663011-*)

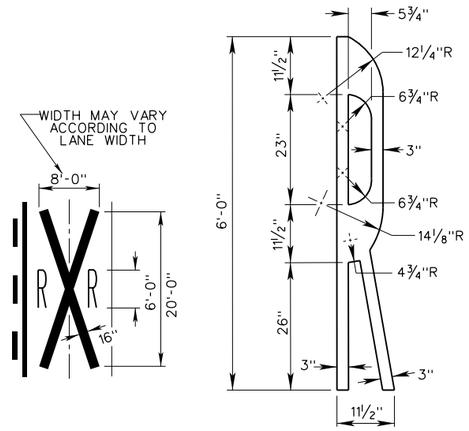

RAILROAD-HIGHWAY CROSSINGS
(ITEM 663015-*)

SYMBOL SHALL BE CENTERED ON BICYCLE LANE. SYMBOL MAY BE REVERSED BASED ON ENGINEERING JUDGEMENT FOR UNIQUE CIRCUMSTANCES.

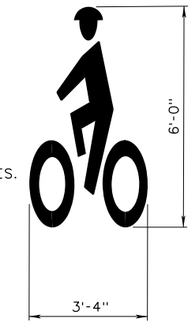

BICYCLE SYMBOL
(ITEM 663009-*)

GENERAL NOTES

1. LOCATION OF WORDS AND SYMBOLS SHALL BE AS SHOWN ON THE PLANS OR AS OTHERWISE SPECIFIED.
2. TYPICAL PLACEMENT OF WORD AND SYMBOL MARKING IS SHOWN ON STANDARD SHEET TEM-2.
3. IF MESSAGES ON PAVEMENT CONSIST OF MORE THAN ONE WORD IT SHOULD BE READ "UP", THAT IS THE FIRST WORD SHOULD BE NEAREST THE DRIVER.
4. ALL WORD AND SYMBOL MARKING SHALL BE WHITE IN COLOR. EXCEPTIONS: MARKINGS VISIBLE ONLY TO TRAFFIC PROCEEDING IN THE WRONG DIRECTION MAY BE RED. ELONGATED INTERSTATE ROUTE SHIELDS MAY BE RED AND BLUE.
5. WORD AND SYMBOL MARKING SHALL BE MADE OF TYPE V MATERIAL AS INDICATED ON THE CONTRACT PLANS. ENHANCED SKID RESISTANT TYPE V MATERIAL SHALL BE USED WHEN SPECIFIED.
6. YIELD MARKINGS SHOULD BE PLACED AT THE DESIRED YIELD POINT AS NEAR AS POSSIBLE TO THE INTERSECTING ROADWAY, BUT IN NO CASE MORE THAN 30 FEET OR LESS THAN 4 FEET FROM THE NEAREST EDGE OF THE INTERSECTING ROADWAY.
7. WORD/NUMBER MARKINGS SHALL BE MADE UP OF LETTERS/DIGITS OF THE SHAPE AND PROPORTION AS SHOWN IN SECTION 10 OF THE FHWA PUBLICATION "STANDARD HIGHWAY SIGNS AND MARKINGS", LATEST EDITION.
8. ELONGATED ROUTE SHIELD PAVEMENT MARKINGS ARE TO BE TYPE V. US ROUTE SHIELDS SHALL HAVE CONTRAST FOR BOTH ASPHALT AND CONCRETE PAVEMENT. SYMBOL TO BE ALIGNED IN THE CENTER OF THE LANE. ARROWS OR MESSAGES (TO, LEFT, RIGHT, NORTH, SOUTH, ETC.) MAY BE USED TO SUPPLEMENT ROUTE SHIELDS AND SHALL FOLLOW THE ROUTE SHIELD. USE AN 80 FT GAP BETWEEN MARKINGS. HOWEVER, CARDINAL DIRECTIONS (IF USED) MAY BE 40 FT FROM A ROUTE SHIELD MARKING.
9. USE OF ROUTE SHIELD PAVEMENT MARKINGS MUST BE SUPPORTED BY STUDY AND APPROVED BY TRAFFIC ENGINEERING DIVISION.

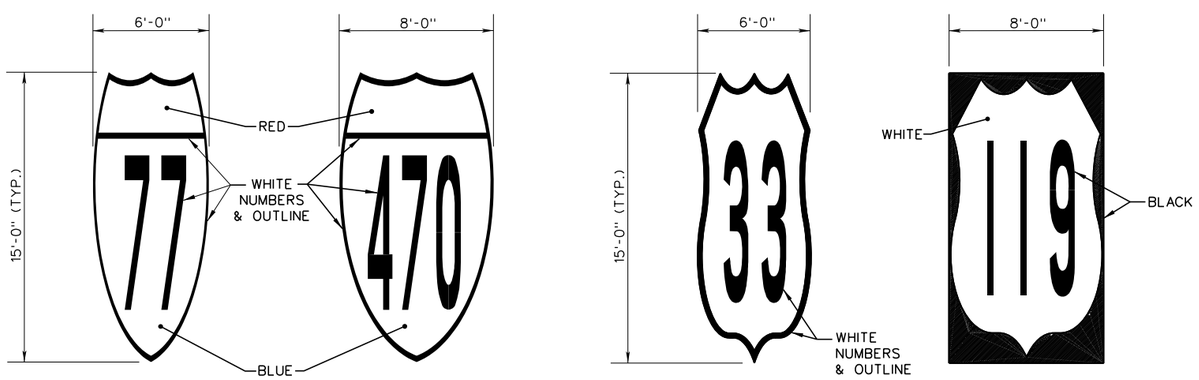

ON ASPHALT OR CONCRETE PAVEMENT

ON ASPHALT PAVEMENT

ON CONCRETE PAVEMENT

INTERSTATE SHIELDS **

US ROUTE SHIELDS **

TYPICAL ELONGATED ROUTE SHIELDS **

**** - SEE NOTE 9**

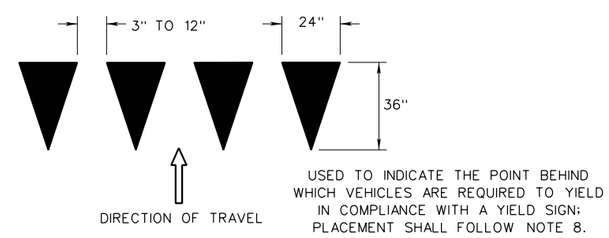

YIELD TRIANGLES
(ITEM 663008-*)

NOTE:
⇦ THIS ARROW ONLY INDICATES DIRECTION OF TRAVEL.

WEST VIRGINIA DEPARTMENT OF TRANSPORTATION
DIVISION OF HIGHWAYS
STANDARD DETAIL

PREPARED: 8/2018
REVISION DATE

CHANNELIZATION, WORD AND SYMBOL MARKINGS

(SHEET 2 of 3)

STANDARD SHEET TEM-3

TRAFFIC ENGINEERING DIVISION

12/19/2018

Z:\Projects\WVDOT\Standard Details vol II\New_Sheets\Marking\TEM-3-2.dgn

J04C02C03-STDBDR c

GENERAL NOTES

1. LOCATION OF WORDS AND SYMBOLS SHALL BE AS SHOWN ON THE PLANS OR AS OTHERWISE SPECIFIED.
2. CENTER THE ARROW ON THE LANE CENTERLINE BETWEEN THE LATERAL EXTREMITIES OF THAT ARROW TYPE.
3. ALL WORD AND SYMBOL MARKING SHALL BE WHITE IN COLOR. (EXCEPTION: MARKINGS VISIBLE ONLY TO TRAFFIC PROCEEDING IN THE WRONG DIRECTION MAY BE RED).
4. WORD AND SYMBOL MARKING SHALL BE MADE OF TYPE V MATERIAL AS INDICATED ON THE CONTRACT PLANS. ENHANCED SKID RESISTANT TYPE V MATERIAL SHALL BE USED WHEN SPECIFIED.

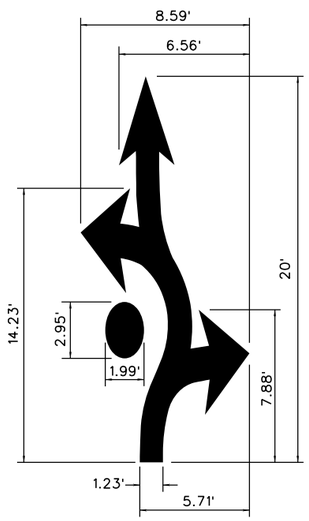

TYPE LTRE

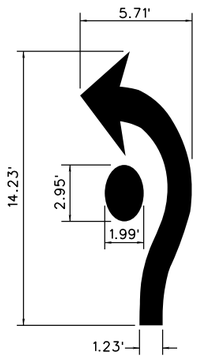

TYPE LE

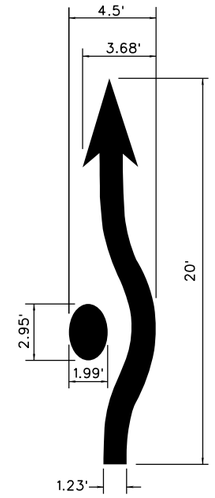

TYPE TE

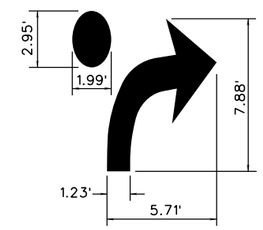

TYPE RE

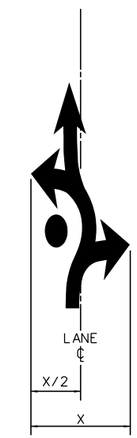

LANE PLACEMENT
SEE NOTE 2

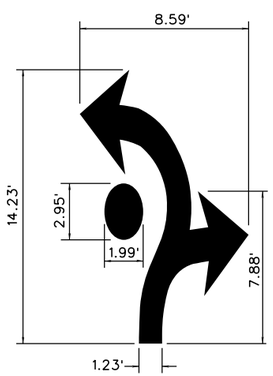

TYPE LRE

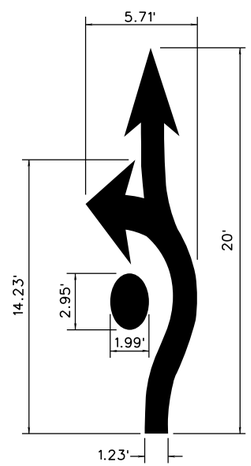

TYPE LTE

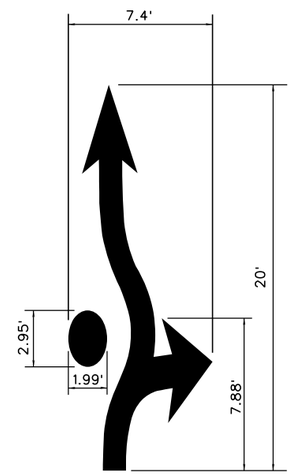

TYPE TRE

ROUNDABOUT TRAFFIC ARROWS
(ITEM 6630??-#)

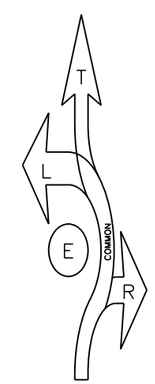

COMPONENT KEY

WEST VIRGINIA DEPARTMENT OF TRANSPORTATION
DIVISION OF HIGHWAYS
STANDARD DETAIL

PREPARED: 8/2018
REVISION DATE

CHANNELIZATION, WORD AND SYMBOL MARKINGS

(SHEET 3 of 3)

STANDARD SHEET TEM-3

TRAFFIC ENGINEERING DIVISION

12/19/2018

Z:\Projects\WVDOT\Standard Details vol II\New_Sheets\Marking\TEM-3-3.dgn

J04C02C03-STDBDR c

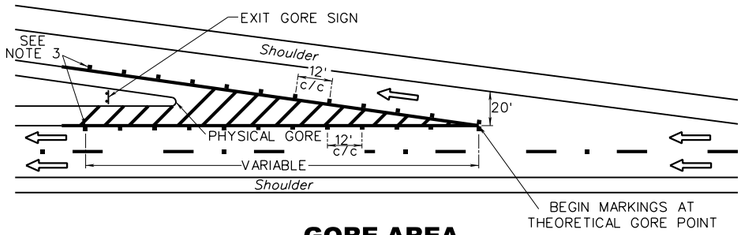

GORE AREA

NOTES:
1. THE SPACING BETWEEN MARKERS IN THE GORE AREA SHOULD BE APPROXIMATELY 12 FEET APART AND CENTERED BETWEEN THE STRIPES (IF THEY ARE EXISTING).
2. END MARKERS APPROXIMATELY 20 FEET BEYOND EXIT GORE SIGN OR PHYSICAL GORE IF NO SIGN.
3. IF MONO-DIRECTIONAL LENSES ARE TO BE UTILIZED ALONG THE SECTION OF ROADWAY CONTAINING THE GORE AREA, BI-DIRECTIONAL WHITE/RED LENSES SHALL BE UTILIZED AROUND THE PERIMETER OF THE GORE AREA. IN ADDITION, BI-DIRECTIONAL WHITE/RED LENSES SHALL BE UTILIZED FOR ALL LANE LINE LENSES BEGINNING 1500' IN ADVANCE OF THE GORE SIGN AND ENDING AT THE GORE SIGN.

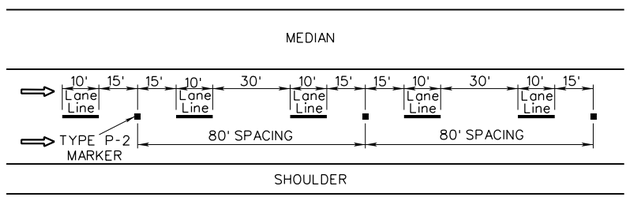

LANE LINE OF DIVIDED HIGHWAY

NOTES:
1. BI-DIRECTIONAL MARKERS SHOWN. MONO-DIRECTIONAL REFLECTORS MAY BE REQUIRED. SEE GENERAL NOTES.

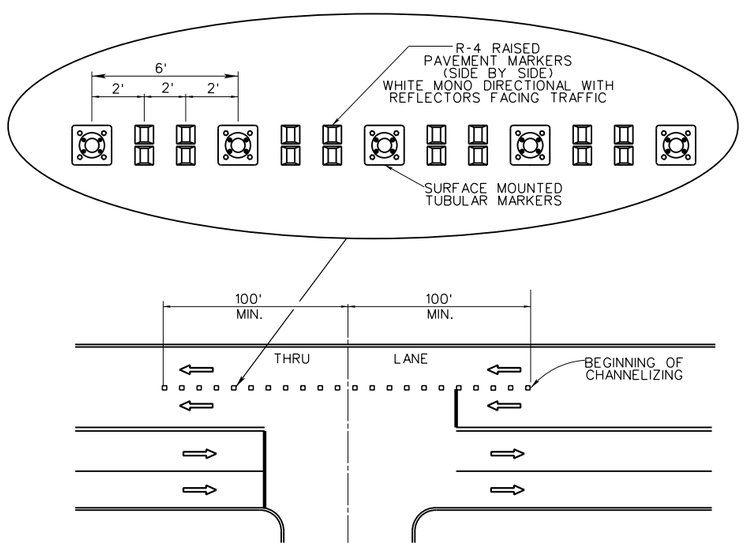

CONTINUOUS THRU LANE DELINEATION

NOTES:
1. LOCATION OF MARKERS ARE SHOWN ON THE PLANS.
2. TYPE R-4 MARKERS ARE NOT TO BE APPLIED OVER PAINT STRIPING.
3. ALL TYPE R-4 MARKERS AND TUBULAR MARKERS SHALL BE INSTALLED IN ACCORDANCE WITH THE STANDARD SPECIFICATION.
4. ALL TUBULAR MARKERS SHALL BE MECHANICAL ANCHORED.

GENERAL NOTES

PAVEMENT MARKERS ARE USED TO SUPPLEMENT EXISTING PAINTED MARKINGS. UNLESS OTHERWISE SPECIFIED, THE COLOR OF THE FACE OF THE REFLECTIVE MARKER LENS VIEWED BY TRAFFIC MOVING IN THE CORRECT DIRECTION SHALL CONFORM TO THE COLOR OF THE MARKING WHICH THEY SUPPLEMENT UNDER BOTH DAY AND NIGHT CONDITIONS. THIS SHALL INCLUDE THE BODY OF THE MARKER FOR TYPE R-4 MARKERS. THE FOLLOWING GUIDELINES SHALL BE USED IN DETERMINING THE CORRECT RPM LENS COLOR(S) TO BE USED FOR VARIOUS APPLICATIONS:

1. FOR THE PURPOSES OF THIS SHEET, MEDIAN WIDTH SHALL BE DEFINED AS THE WIDTH BETWEEN OPPOSING DIRECTIONS OF A TRAVELED WAY, EXCLUDING TURN LANES. MARKERS WHICH SUPPLEMENT WHITE PAVEMENT MARKINGS (LANE LINES AND CHANNELIZING LINES) SHALL BE REFLECTIVE IN BOTH DIRECTIONS (BI-DIRECTIONAL), WITH THE LENS FACING TRAFFIC BEING WHITE AND THE OPPOSITE FACE BEING RED, PROVIDED THAT ONE OF THE FOLLOWING CONDITIONS ARE MET:
   - THE ROADWAY IS A DIVIDED HIGHWAY HAVING A MEDIAN WIDTH OF 30 FEET OR GREATER;
   - THE ROADWAY IS A DIVIDED HIGHWAY HAVING A RIGID BARRIER SUCH AS A CONCRETE MEDIAN WALL OR DOUBLE FACED GUARDRAIL WHICH SEPARATES OPPOSING DIRECTIONS OF TRAVEL AND PHYSICALLY RESTRICTS VISIBILITY OF THE MARKINGS IN THE OPPOSING DIRECTION.

   OTHERWISE, EXCEPT AS NOTED ON THE GORE AREA DETAIL, THE MARKERS SHALL BE REFLECTIVE IN ONE DIRECTION ONLY (MONO-DIRECTIONAL) WITH THE LENS FACING TRAFFIC BEING WHITE.

   SECTIONS OF A ROADWAY WHICH MEET THE CRITERIA ABOVE FOR THE USE OF BI-DIRECTIONAL REFLECTORS, BUT ARE ADJACENT TO MULTI-LANE SECTIONS OF THE SAME ROADWAY WHICH DO NOT MEET THE CRITERIA, SHALL BE A MINIMUM OF 5 MILES IN LENGTH. OTHERWISE, MONO-DIRECTIONAL REFLECTORS SHALL BE USED.

2. WHEN CALLED FOR IN THE PROJECT PLANS, ALL MARKERS INSTALLED TO SUPPLEMENT YELLOW EDGE LINE MARKINGS SHALL BE REFLECTIVE IN ONE DIRECTION (MONO-DIRECTIONAL) ONLY. THE FRONT FACE OF THE LENS SHALL BE YELLOW.

3. ALL MARKERS INSTALLED TO SUPPLEMENT YELLOW CENTER LINE MARKINGS SHALL TYPICALLY BE REFLECTIVE IN BOTH DIRECTIONS (BI-DIRECTIONAL). BOTH LENS FACES SHALL BE YELLOW. NOTE THAT MARKER PLACEMENT AND THE COMBINATION OF MONO-DIRECTIONAL AND BI-DIRECTIONAL YELLOW REFLECTORS TO SUPPLEMENT THE YELLOW MARKINGS OF A TWO WAY LEFT TURN LANE ARE A UNIQUE APPLICATION. THE CONTRACTOR IS ADVISED TO CLOSELY REVIEW THE PROVIDED DETAIL FOR GUIDANCE.

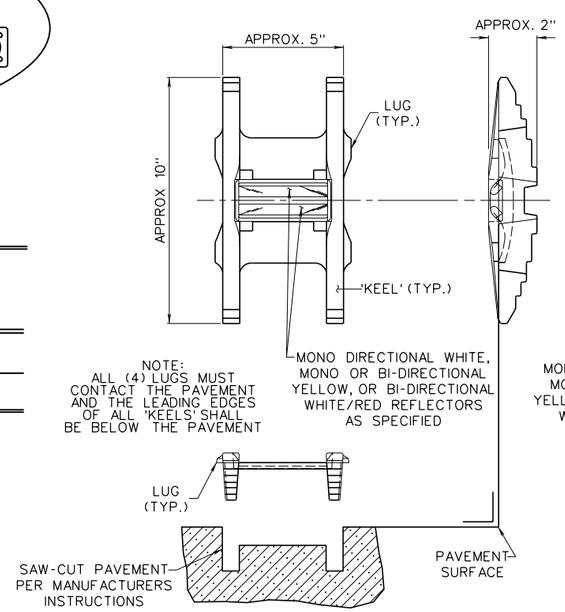

TYPICAL TYPE P-2 MARKER
(ITEM 663012-*)

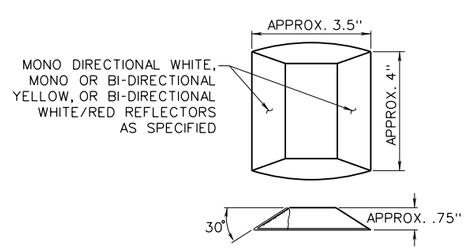

TYPE R-4 MARKER
(ITEM 663012-*)

NOTES:
1. BI-DIRECTIONAL MARKERS SHOWN. MONO-DIRECTIONAL REFLECTORS MAY BE REQUIRED. (SEE GENERAL NOTES)

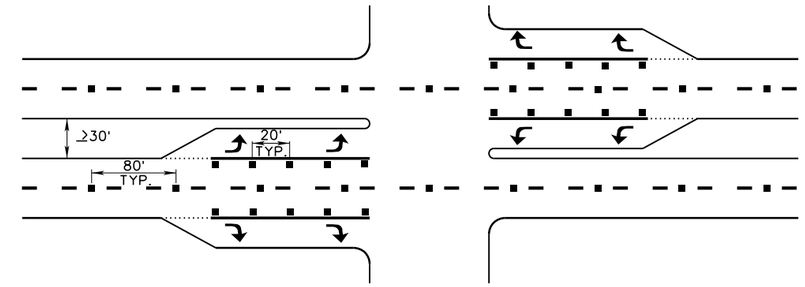

MULTI-LANE ROADWAY WITH AT-GRADE INTERSECTION

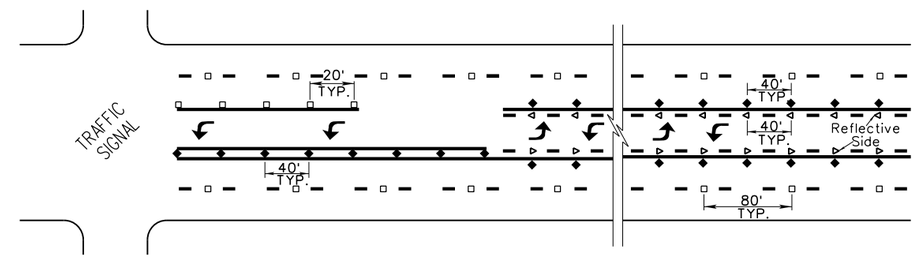

MULTI-LANE ROADWAY WITH TWO-WAY LEFT TURN LANE

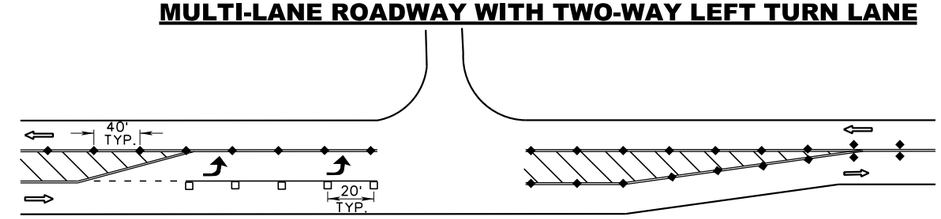

TWO LANE HIGHWAY WITH LEFT TURN BAY

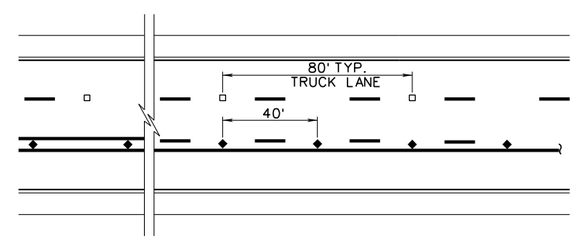

TWO LANE HIGHWAY WITH TRUCK CLIMBING LANE

NOTE:
⇦ THIS ARROW ONLY INDICATES DIRECTION OF TRAVEL.

LEGEND
- ■ - BI-DIRECTIONAL (WHITE/RED) WITH WHITE REFLECTOR FACING TRAFFIC
- □ - MONO-DIRECTIONAL (WHITE)
- ◆ - BI-DIRECTIONAL (YELLOW)
- ▷ - MONO-DIRECTIONAL (YELLOW)

WEST VIRGINIA DEPARTMENT OF TRANSPORTATION
DIVISION OF HIGHWAYS
STANDARD DETAIL

PREPARED: 8/2018
REVISION DATE

RAISED PAVEMENT MARKERS TYPES P-2 and R-4

(SHEET 1 OF 2)

STANDARD SHEET TEM-4

TRAFFIC ENGINEERING DIVISION

12/19/2018

Z:\Projects\WVDOT\Standard Details vol II\New_Sheets\Marking\TEM-4-1.dgn

J04C02C03-STDBOR c

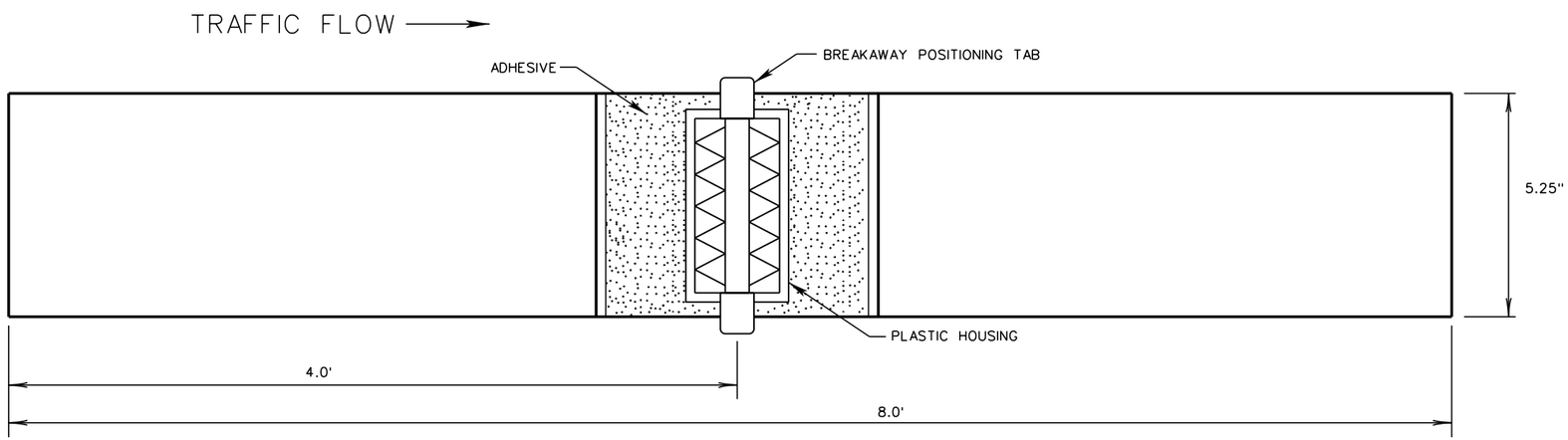

PLAN

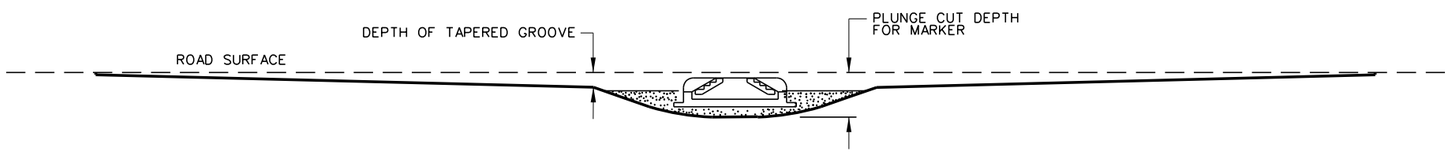

ELEVATION

TYPE S RAISED PAVEMENT MARKER

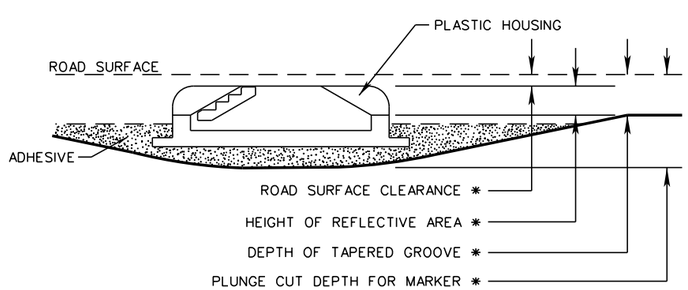

* DIMENSIONS SPECIFIED BY MANUFACTURER OF REFLECTOR HOLDER

REFLECTOR AND REFLECTOR HOLDER INSTALLATION DETAIL

GENERAL NOTES

FOR LAYOUT AND SPACING, REFER TO SHEET 1.

REFLECTORS SHALL BE MONO OR BI-DIRECTIONAL IN ACCORDANCE WITH SHEET 1.

ALL GROOVE CUTS SHALL START AT ROAD LEVEL ON EACH END AND TAPER AT A FIXED RATE AS SHOWN ON THE ELEVATION DETAIL. DEPTH TO BE AS SPECIFIED BY THE MANUFACTURER OF THE REFLECTOR HOLDER.

SPECIFICS IN REGARDS TO DIMENSIONING OF THE PLUNGE CUT PORTIONS OF THE INSTALLATIONS SHALL BE AS RECOMMENDED BY THE REFLECTOR HOLDER MANUFACTURER.

ADHESIVE SHALL BE TYPE P-2 MARKER EPOXY MEETING THE REQUIREMENTS OF THE STANDARD SPECIFICATIONS.

REFLECTOR HOLDERS AND REFLECTORS SHALL BE MODELS LISTED ON THE WVDOH APPROVED PRODUCTS LIST (APL).

ALL LABOR, EQUIPMENT, AND MATERIALS REQUIRED FOR THE INSTALLATION OF SLOTTED MARKERS SHALL BE PAID FOR UNDER BID ITEM NUMBER 663013-004 - SLOTTED MARKER, TYPE S.

WEST VIRGINIA DEPARTMENT OF TRANSPORTATION
DIVISION OF HIGHWAYS
STANDARD DETAIL

PREPARED: 8/2018

REVISION DATE

RAISED PAVEMENT MARKERS TYPE S

(SHEET 2 OF 2)

STANDARD SHEET TEM-4

TRAFFIC ENGINEERING DIVISION

12/19/2018

Z:\Projects\WVDOT\Standard Details vol II\New_Sheets\Marking\TEM-4-2.dgn

J04C02C03-STDBDR c

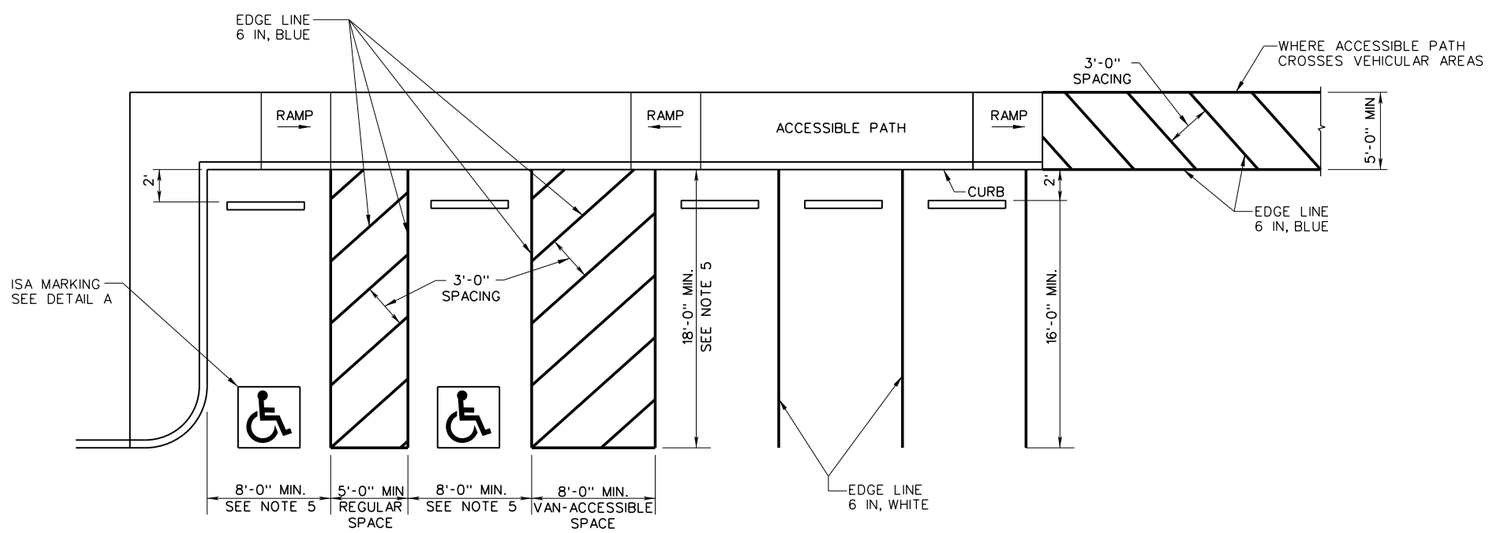

PERPENDICULAR PARKING

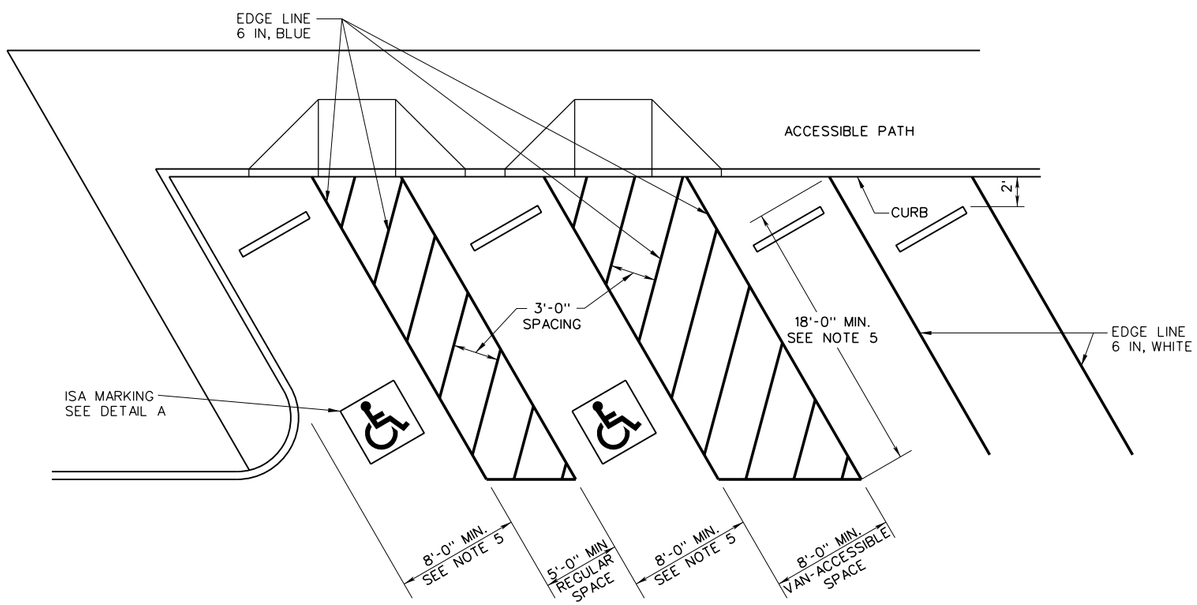

ANGLED PARKING

TYPICAL ACCESSIBLE PARKING LAYOUTS

GENERAL NOTES

1. LOCATION OF ISA MARKING SHALL BE AS SHOWN ON THE PLANS OR AS OTHERWISE SPECIFIED.
2. THE ISA MARKING SHALL BE COMPRISED OF A WHITE FIGURE ON A BLUE BACKGROUND. THE PAVEMENT MARKINGS COLORS SHALL CONFORM TO THE STANDARD HIGHWAY COLORS.
3. THE ISA MARKING ONLY TO BE USED WHERE THE FACILITY MEETS FEDERAL ACCESSIBILITY GUIDELINES.
4. THE PARKING LAYOUTS SHOWN ARE TO BE CONSIDERED SCHEMATIC. LAYOUTS WILL VARY DEPENDING ON FEDERAL ACCESSIBILITY GUIDELINES AND SITE SPECIFICS.
5. ACCESSIBLE PARKING SPACES SHALL NOT BE SMALLER IN LENGTH OR WIDTH THAN THAT SPECIFIED BY THE LOCAL JURISDICTION FOR OTHER PARKING SPACES.
6. ACCESSIBLE PATHS THAT MUST CROSS VEHICULAR AREAS SHALL BE STRIPED AS SHOWN.
7. SEE STANDARD SHEET PVT 7 IN STANDARD DETAILS BOOK VOLUME I FOR RAMP DETAILS.

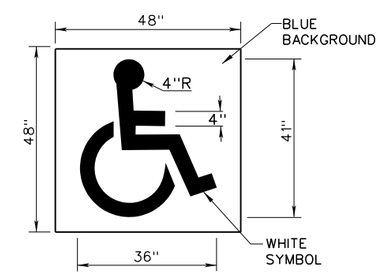

DETAIL A

TYPE V ISA MARKING

ISA = INTERNATIONAL SYMBOL OF ACCESS

WEST VIRGINIA DEPARTMENT OF TRANSPORTATION
DIVISION OF HIGHWAYS
STANDARD DETAIL

PREPARED: 8/2018
REVISION DATE

ACCESSIBLE PARKING AND SYMBOL MARKINGS

STANDARD SHEET TEM-5

TRAFFIC ENGINEERING DIVISION

12/19/2018

Z:\Projects\WVDOT\Standard Details vol I\New_Sheets\Marking\TEM-5.dgn

J04C02C03-STDBOR c

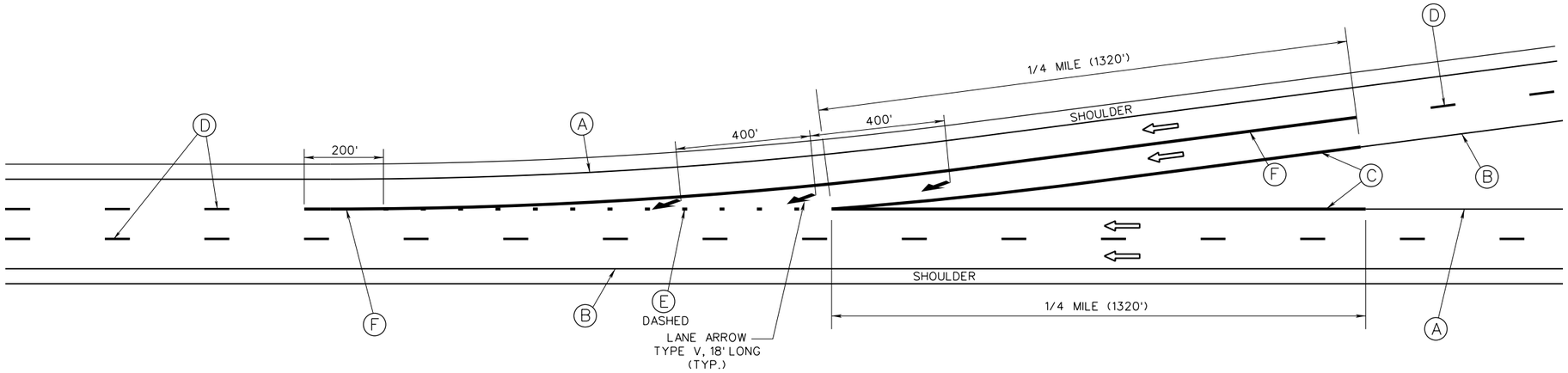

FREEWAY MERGE AREA

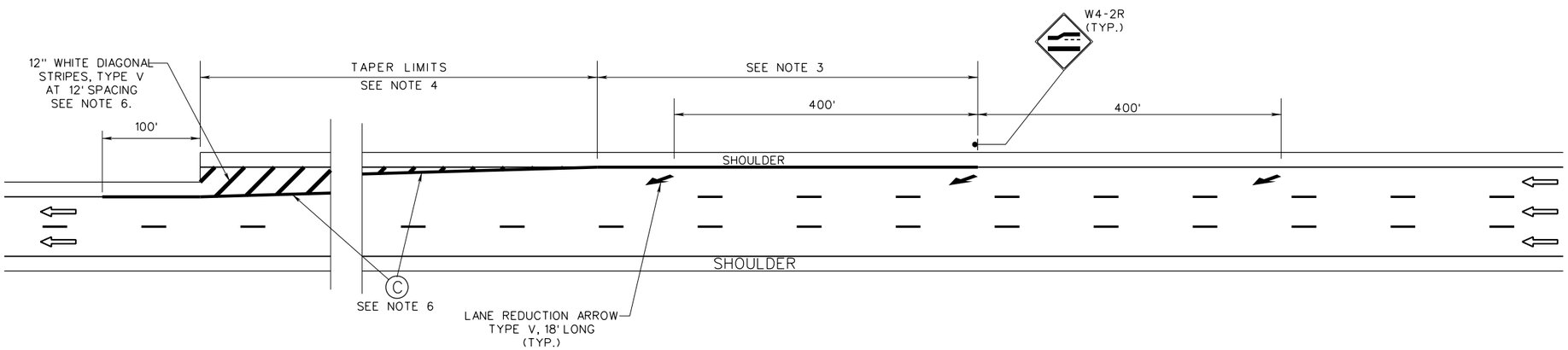

LANE REDUCTION

GENERAL NOTES

1. THE LAYOUTS SHOWN ARE TO BE CONSIDERED AS SCHEMATIC ONLY.
2. THE LANE REDUCTION SCHEMATIC AS SHOWN IS TO BE USED AS A GUIDELINE FOR SITUATIONS WITH A RIGHT LANE REDUCTION. USE A MIRROR IMAGE OF THE SCHEMATIC FOR A LEFT LANE REDUCTION. THE SAME PRINCIPLES CAN BE USED FOR REDUCTION FROM TWO LANES TO ONE LANE.
3. THIS DISTANCE SHALL BE 500' FOR NEW CONSTRUCTION. THE DISTANCE MAY VARY UNDER EXISTING CONDITIONS. THE CENTER LANE REDUCTION ARROW SHALL BE PLACED IN LINE WITH THE WR-2R (OR L FOR LEFT LANE REDUCTION) SIGN AND THE OTHER ARROWS PLACED 400' AHEAD AND BACK OF THE CENTER ARROW.
4. THIS DISTANCE SHALL BE AS SHOWN ON THE CONTRACT PLANS FOR NEW CONSTRUCTION, BUT MAY VARY UNDER EXISTING CONDITIONS.
5. SEE TEM-3 FOR LANE REDUCTION ARROW DIMENSIONS.
6. STRIPING TO BE YELLOW FOR LEFT LANE REDUCTION SITUATIONS.

LEGEND

(A)-ITEM 663001-✳ , EDGE LINE (6" WHITE)
(B)-ITEM 663001-✳ , EDGE LINE (6" YELLOW)
(C)-ITEM 663001-✳ , EDGE LINE (8" WHITE)
(D)-ITEM 663002-✳ , LANE LINE (6")
(E)-ITEM 663002-✳ , LANE LINE (8")
(F)-ITEM 663004-✳ , CHANNELIZING LINE (8", TYPE V)

NOTE:
⇦ THIS ARROW ONLY INDICATES DIRECTION OF TRAVEL.

WEST VIRGINIA DEPARTMENT OF TRANSPORTATION
DIVISION OF HIGHWAYS
STANDARD DETAIL

PREPARED: 8/2018
REVISION DATE

TYPICAL LANE REDUCTION ARROW USAGE

STANDARD SHEET TEM-6

TRAFFIC ENGINEERING DIVISION

12/19/2018

Z:\Projects\WVDOT\Standard Details vol II\New_Sheets\Marking\TEM-6.dgn

J04C02C03-STDBOR c

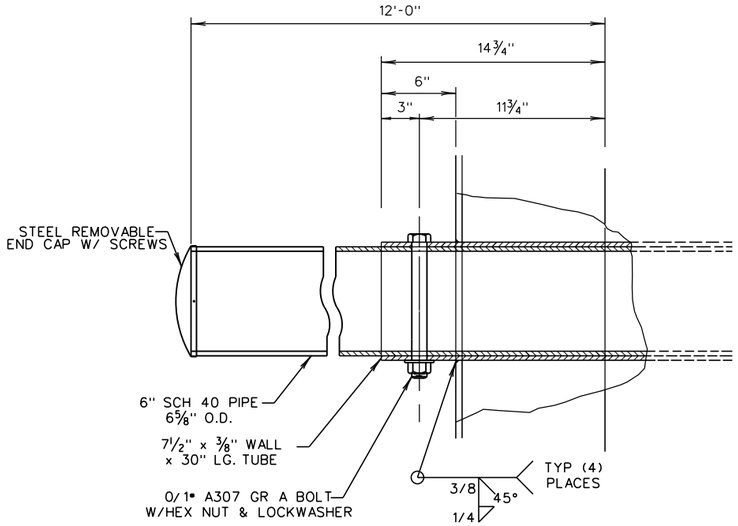

DETAIL C

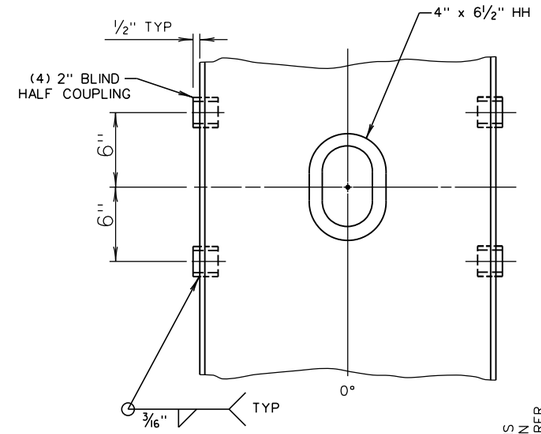

DETAIL D

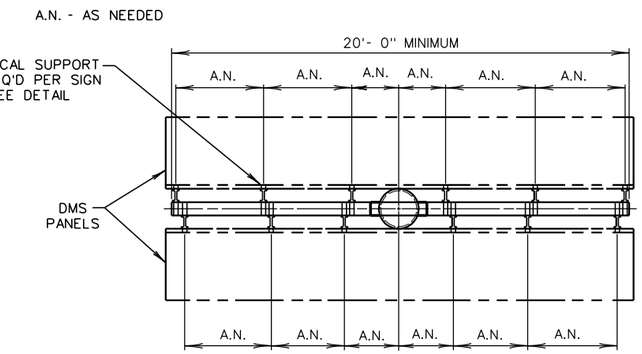

TOP VIEW

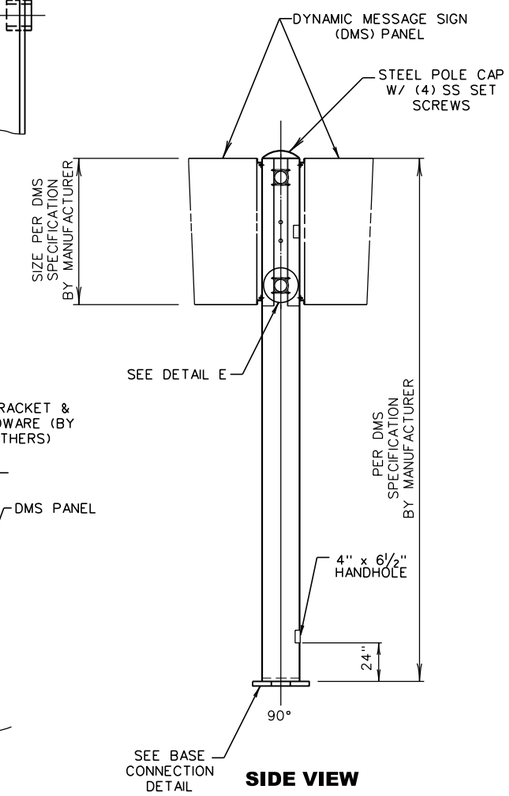

SIDE VIEW

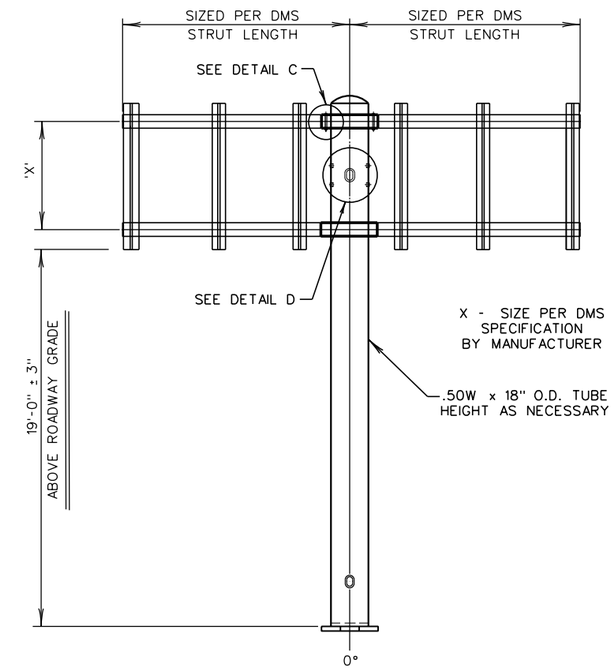

ELEVATION

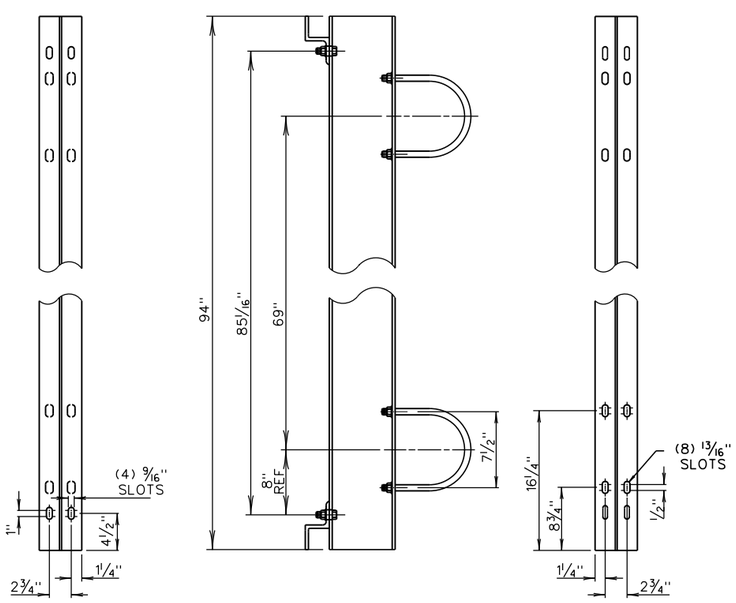

Z-BRACKET SIDE **U-BOLT SIDE**

VERTICAL SUPPORT DETAIL

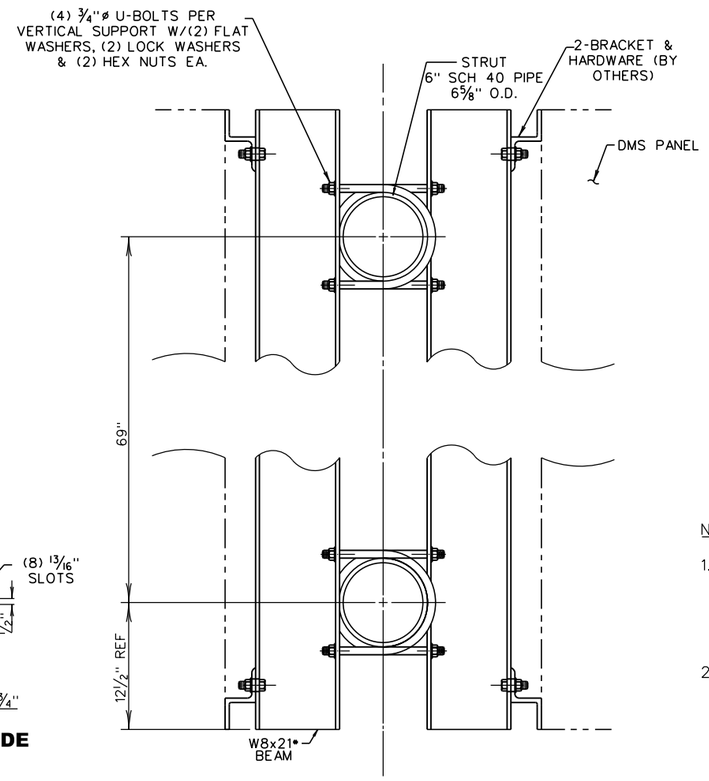

DETAIL E

STEEL CANTILEVER SIGN STRUCTURE

NOTES

1. DESIGNED IN ACCORDANCE AASHTO STANDARD SPECIFICATIONS FOR STRUCTURAL SUPPORTS FOR HIGHWAY SIGNS, LUMINAIRES, AND TRAFFIC SIGNALS, 6TH EDITION, 2013 USING 90 MPH WIND SPEED AND FATIGUE CATEGORY I.
2. VIBRATION IS MORE LIKELY TO OCCUR WHEN STRUCTURES ARE INSTALLED WITHOUT ATTACHING THE SIGNS. THEREFORE, THE INTENDED EQUIPMENT OR DAMPENING DEVICES MUST BE INSTALLED AT THE TIME OF ERECTION. BECAUSE VIBRATION IS GENERALLY UNPREDICTABLE. A MAINTENANCE PROGRAM SHOULD INCLUDE INSPECTION FOR INDICATIONS OF EXCESSIVE VIBRATION OR FATIGUE AND EXAMINATION FOR ANY STRUCTURAL DAMAGE OR BOLT LOOSENING.
3. SEE TEI-01B FOR BASE CONNECTION AND FOUNDATION DETAILS.

WEST VIRGINIA DEPARTMENT OF TRANSPORTATION
DIVISION OF HIGHWAYS
STANDARD DETAIL

PREPARED: 8/2018
REVISION DATE

DYNAMIC MESSAGE SIGN SUPPORT DETAILS STEEL CANTILEVER

STANDARD SHEET TEI-01A

TRAFFIC ENGINEERING DIVISION

12/19/2018

Z:\Projects\WVDOT\Standard Details vol II\New_Sheets\TES\TEI-01A.dgn

J04C02C03-STDBOR c

NOTES

1. ALL REBAR TO BE #4 EXCEPT AS SHOWN
2. FOUNDATION SHALL REFERENCE TES-40, AND SHALL BE BASED ON THE EMBEDED CYLINDRICAL DIMENSION OF 3.5 FT. DIA. X 9.0 FT. LENGTH

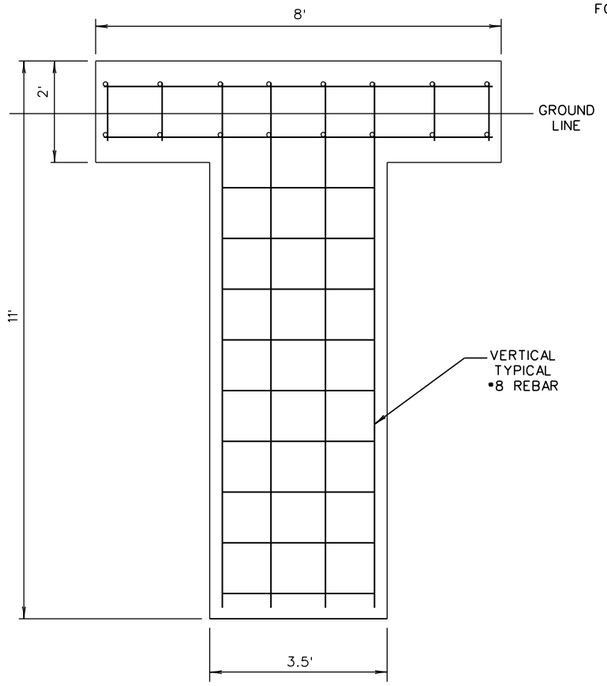

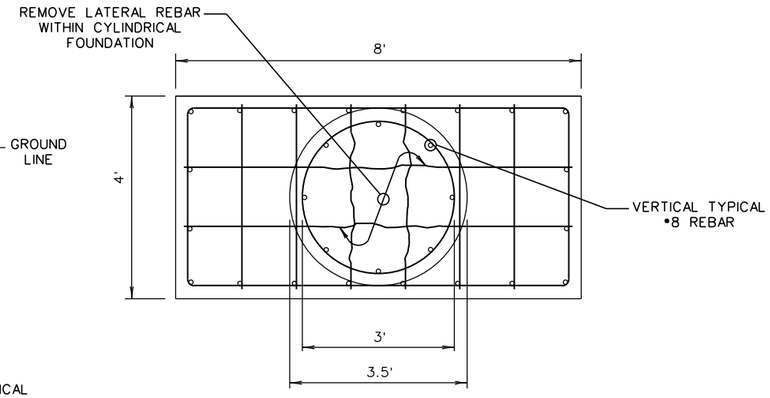

FRONT ACCESS DMS FOUNDATION DESIGN

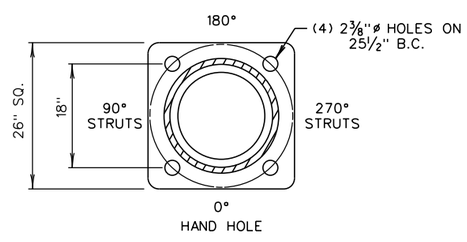

SECTION A-A

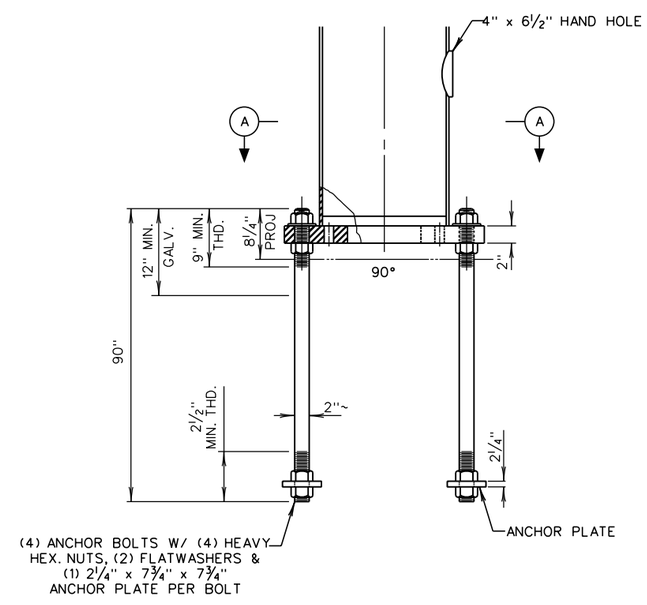

BASE CONNECTION DETAIL

WEST VIRGINIA DEPARTMENT OF TRANSPORTATION
DIVISION OF HIGHWAYS
STANDARD DETAIL

PREPARED: 8/2018

REVISION DATE

DYNAMIC MESSAGE SIGN SUPPORT DETAILS STEEL CANTILEVER

STANDARD SHEET TEI-01B

TRAFFIC ENGINEERING DIVISION

12/19/2018

Z:\Projects\WVDOT\Standard Details vol II\New_Sheets\TES\TEI-01B.dgn

J04C02C03-STDBOR c

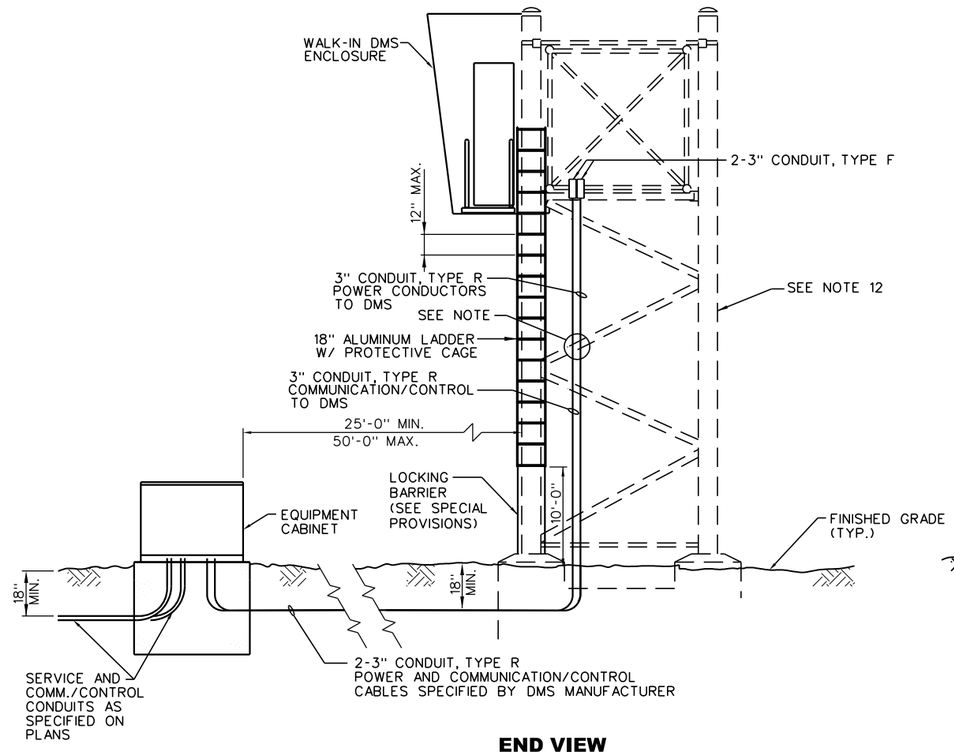

END VIEW

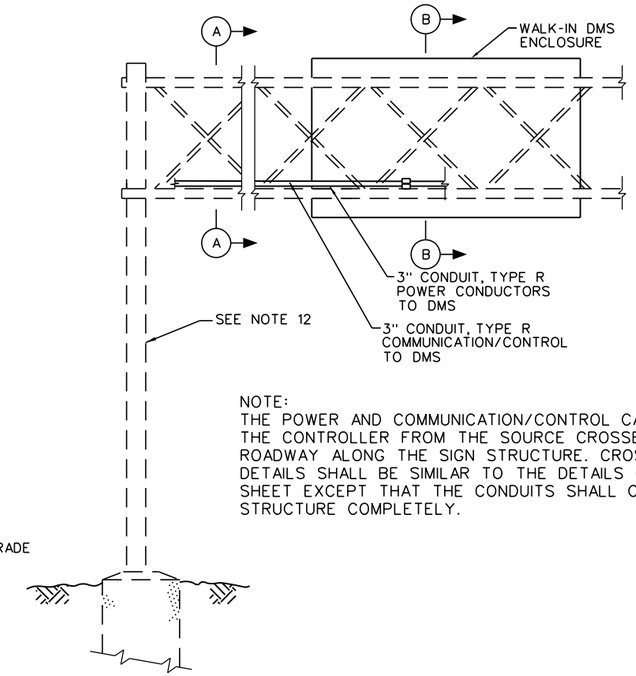

NOTE:
THE POWER AND COMMUNICATION/CONTROL CABLES TO THE CONTROLLER FROM THE SOURCE CROSSES THE ROADWAY ALONG THE SIGN STRUCTURE. CROSSING DETAILS SHALL BE SIMILAR TO THE DETAILS ON THIS SHEET EXCEPT THAT THE CONDUITS SHALL CROSS THE STRUCTURE COMPLETELY.

REAR VIEW

NOTES

1. THE CONTRACTOR SHALL DEVELOP A METHOD OF SECURING THE CONDUIT TO THE STRUCTURE AND SUBMIT AN ATTACHMENT DETAIL TO THE ENGINEER FOR APPROVAL.
2. THE LADDER SHALL COMPLY WITH ALL APPLICABLE OSHA REQUIREMENTS.
3. LADDER AND CAGE SHALL BE FABRICATED FROM EXTRUDED ALUMINUM MEETING THE REQUIREMENTS OF SECTION 658.2.1 OF THE STANDARD SPECIFICATIONS.
4. THE LADDER SHALL BE RATED FOR A MINIMUM LOAD OF 300 LBS.
5. DETAILS OF THE PROPOSED CONNECTION OF THE LADDER TO THE POST SHALL BE INCLUDED IN THE SHOP DRAWINGS SUBMITTED FOR THE STRUCTURE.
6. MAINTENANCE WALKWAY, RAILING AND LUMINAIRE SUPPORTS SHALL BE PROVIDED AT THE LOCATIONS SHOWN.
7. ALL MATERIAL SHALL BE ALUMININUM ALLOY 6061-T6 UNLESS OTHERWISE NOTED.
8. ALL BOLTS, U-BOLTS, WASHERS AND NUTS SHALL BE ASTM A-320 TYPE 304, GRADE B8, CLASS 2, STRAIN HARDENED.
9. PIPE FITTINGS SHALL BE EITHER MECHANICALLY FASTENED OR WELDED TO HANDRAIL SECTION AND SHALL BE COMPATIBLE WITH THE MATERIAL USED FOR HANDRAILS. DETAILS OF FITTINGS SHALL BE SUBMITTED TO THE ENGINEER FOR APPROVAL.
10. FILLER ALLOY FOR WELDING SHALL CONFORM TO THE REQUIREMENTS OF A.W.A.-ASTM CLASSIFICATION ER5556 FOR ER5356.
11. THE MINIMUM SECTION MODULUS SHALL BE 2.05 IN³ PER FOOT WIDTH OF WALKWAY GRATING. THE INTERMEDIATE JOINTS IN THE GRATING SHALL BE AS SHOWN IN SECTION A-A. GRATING SHALL NOT CANTILEVER MORE THAN 2 FT-10 IN. BEYOND HANGER ARMS AT EACH END OF THE MAINTENANCE WALKWAY. GRATING SHALL BE CONTINUOUS OVER A MINIMUM OF TWO SPANS.
12. SEE STANDARD SHEETS TE5-1A AND TE5-1B FOR OVERHEAD SIGN SUPPORT BOX TRUSS SPAN DETAILS. THE STRUCTURAL CAPACITY OF THESE SUPPORTS SHALL BE VERIFIED BY THE MANUFACTURER ACCORDING TO THE SIZE AND LOCATION OF THE DMS AND ADDITIONAL WEIGHT CONTRIBUTED BY THE WALKWAY AND LADDER.

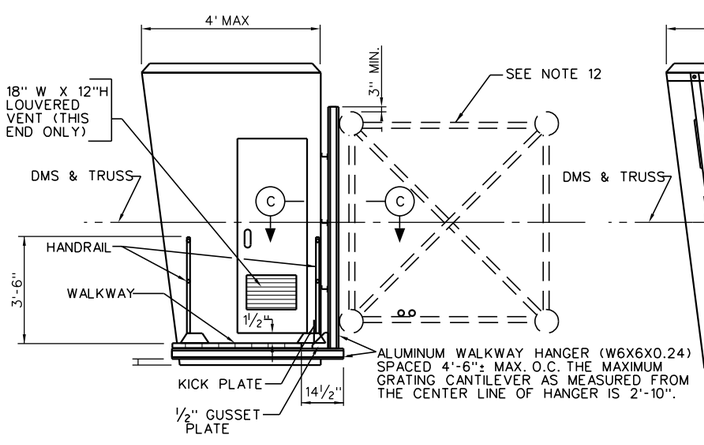

SECTION A-A

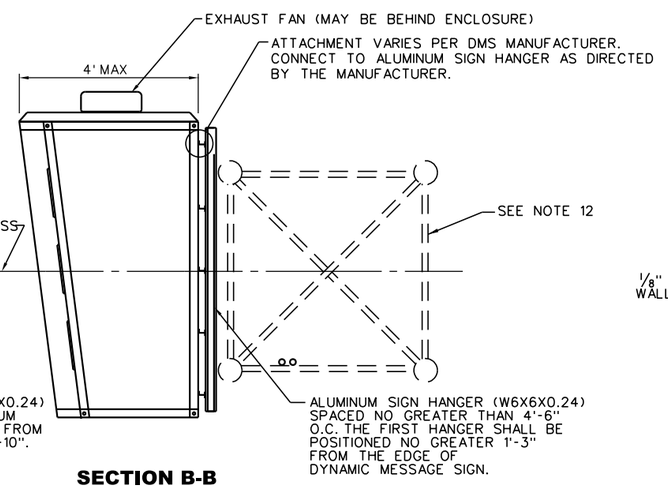

SECTION B-B

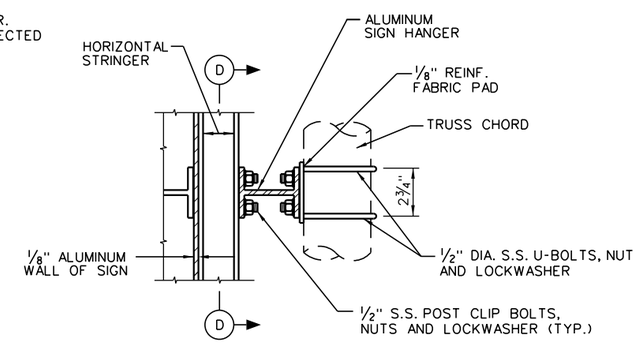

SECTION C-C

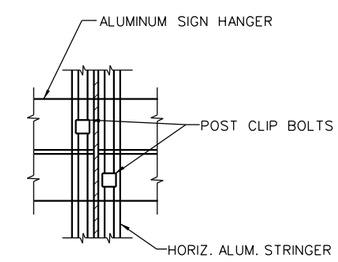

SECTION D-D

NOTE:
ALUMINUM GRATING INSIDE THE SIGN ENCLOSURE AND CATWALK SHALL BE AT THE SAME ELEVATION.

DMS MOUNTING ON OVERHEAD SIGN STRUCTURE

WEST VIRGINIA DEPARTMENT OF TRANSPORTATION
DIVISION OF HIGHWAYS
STANDARD DETAIL

PREPARED: 8/2018
REVISION DATE

DYNAMIC MESSAGE SIGN SUPPORT DETAILS STEEL SPAN

STANDARD SHEET TEI-02

TRAFFIC ENGINEERING DIVISION

12/19/2018

Z:\Projects\WVDOT\Standard Details vol II\New_Sheets\ITS\TEI-02.dgn

J04C02C03-STDBDR c

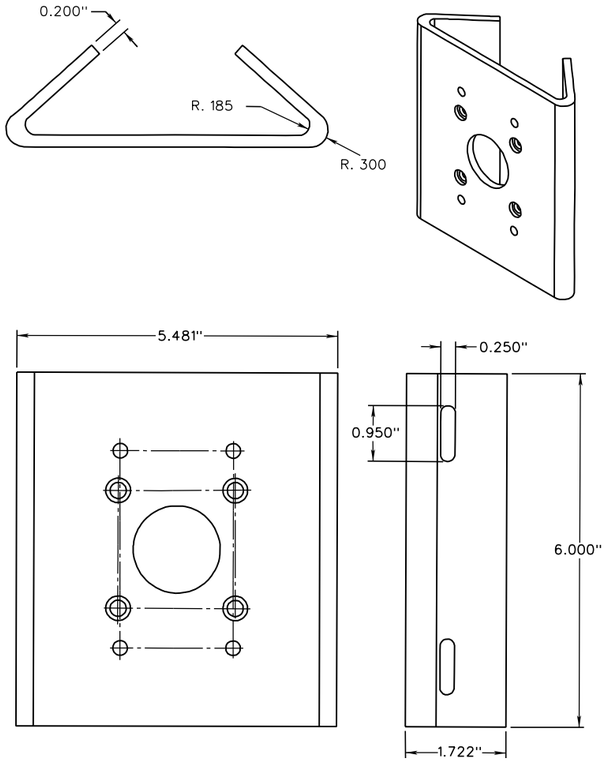

CAMERA ATTACHMENT BRACKET

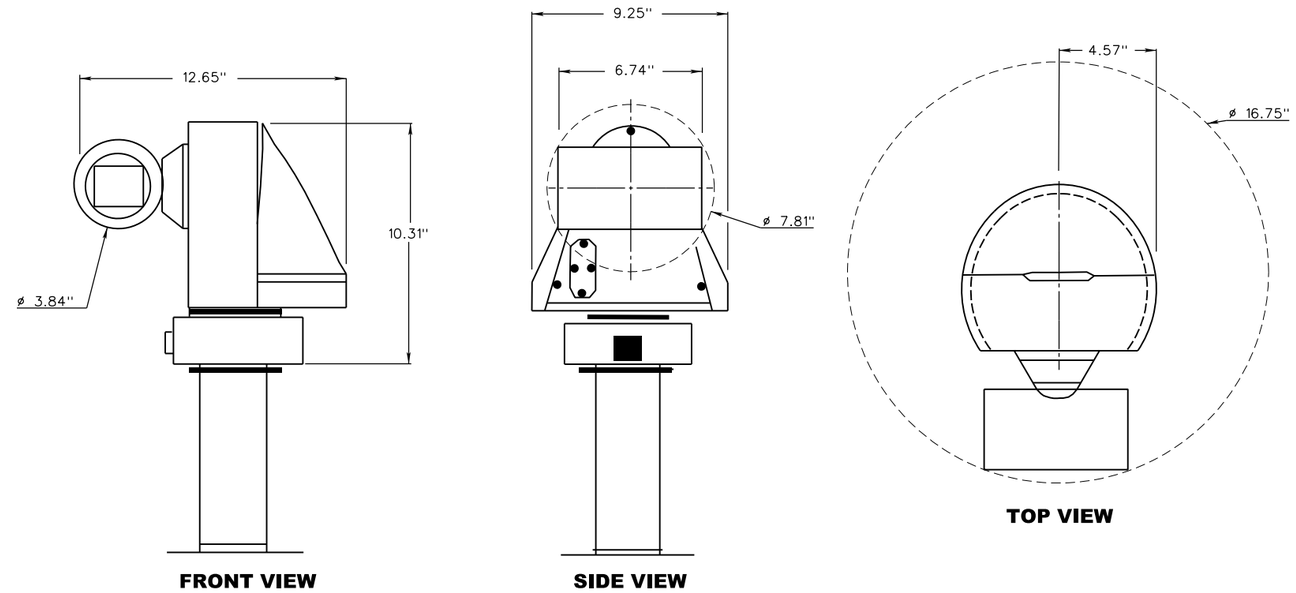

SIDEWINDER CAMERA DETAIL

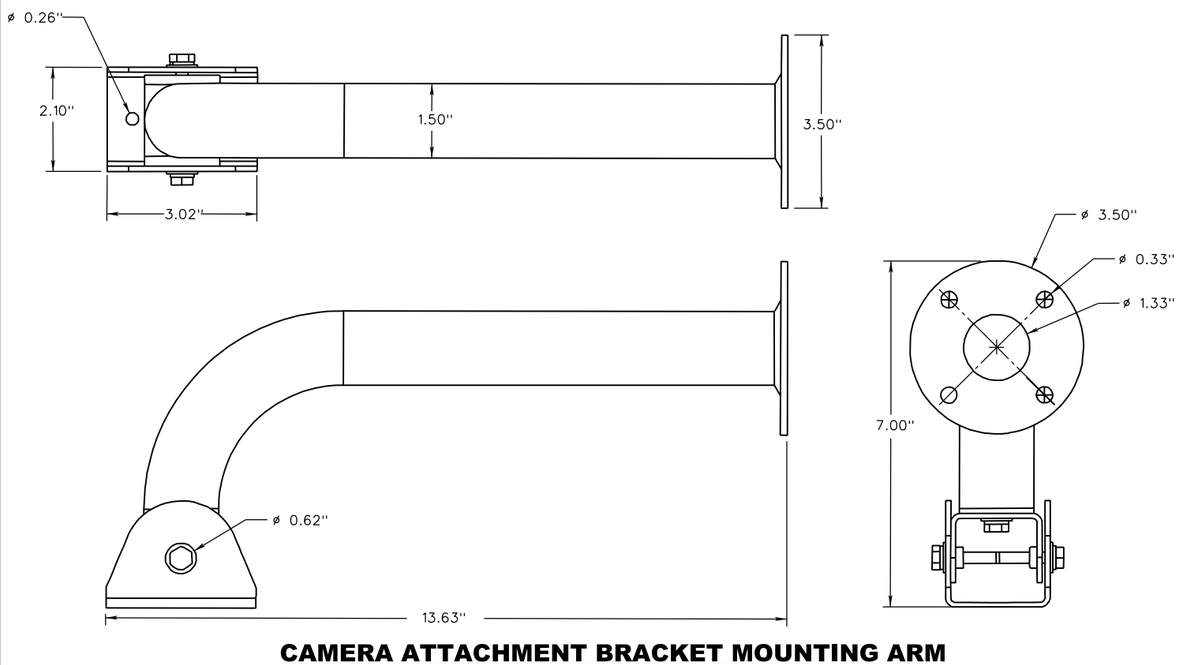

CAMERA ATTACHMENT BRACKET MOUNTING ARM

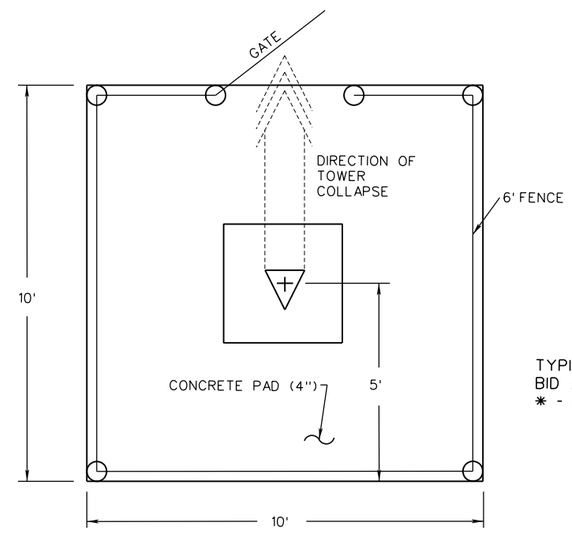

TYPICAL RWIS-ESS TOWER INSTALLATION
BID AS PART OF ITEM 662041-001(✱)
✱ - PER LOCATION

PLAN

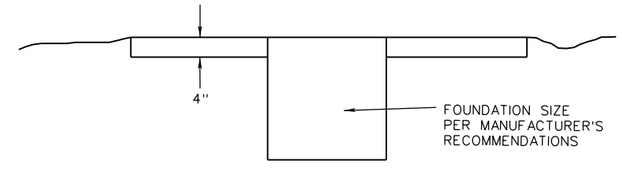

PROFILE

TOWER INSTALLATION

WEST VIRGINIA DEPARTMENT OF TRANSPORTATION
DIVISION OF HIGHWAYS
STANDARD DETAIL

PREPARED: 8/2018
REVISION DATE

ROAD WEATHER INFORMATION SYSTEM (RWIS) DETAILS

STANDARD SHEET TEI-03

TRAFFIC ENGINEERING DIVISION

12/19/2018

Z:\Projects\WVDOT\Standard Details vol II\New_Sheets\ITS\TEI-03.dgn

J04C02C03-STDBOR c