STATE PROJECT NUMBER	FEDERAL PROJECT NUMBER	STATE DIST. NO.	COUNTY	SHEET NO.	TOTAL SHEETS

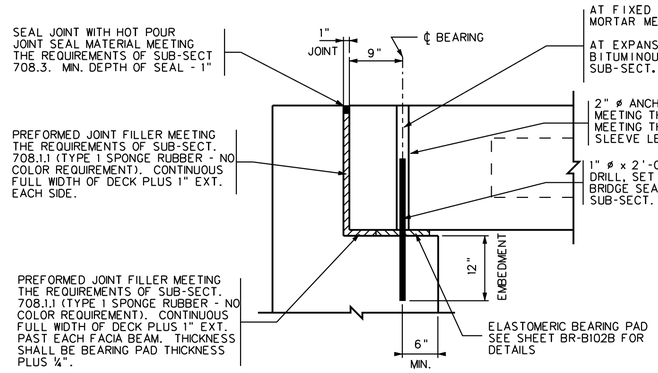

END BEARING DETAIL WITH BACKWALL

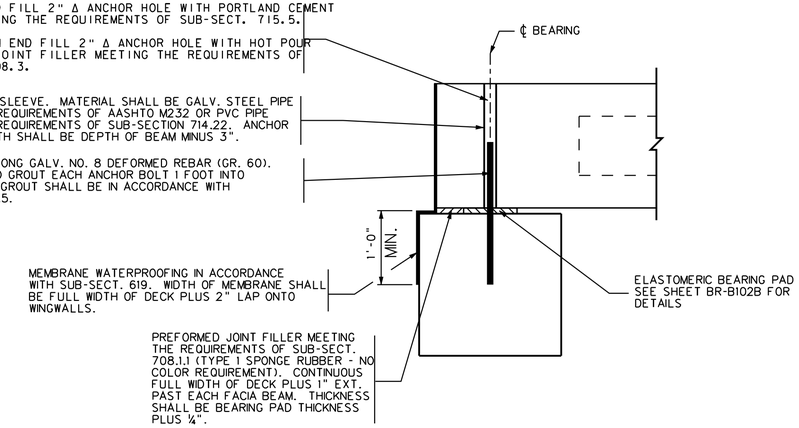

END BEARING DETAIL WITHOUT BACKWALL

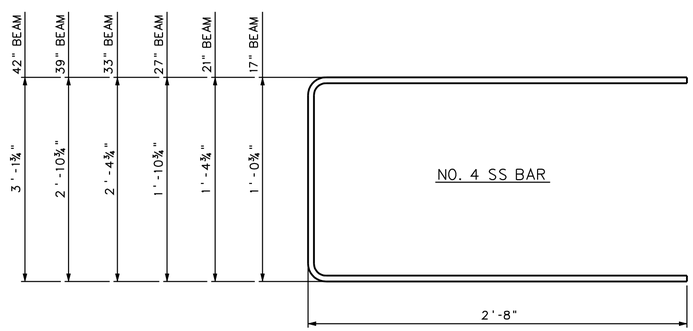

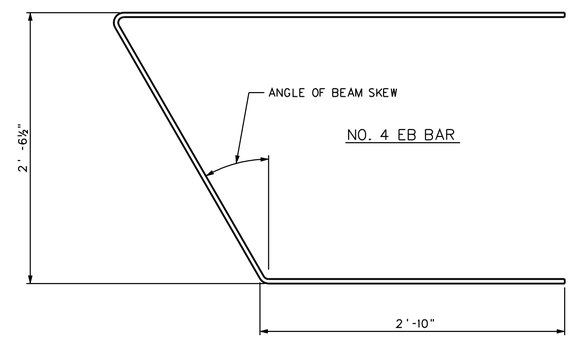

REINFORCING BAR DETAIL

SKEWED BEAMS

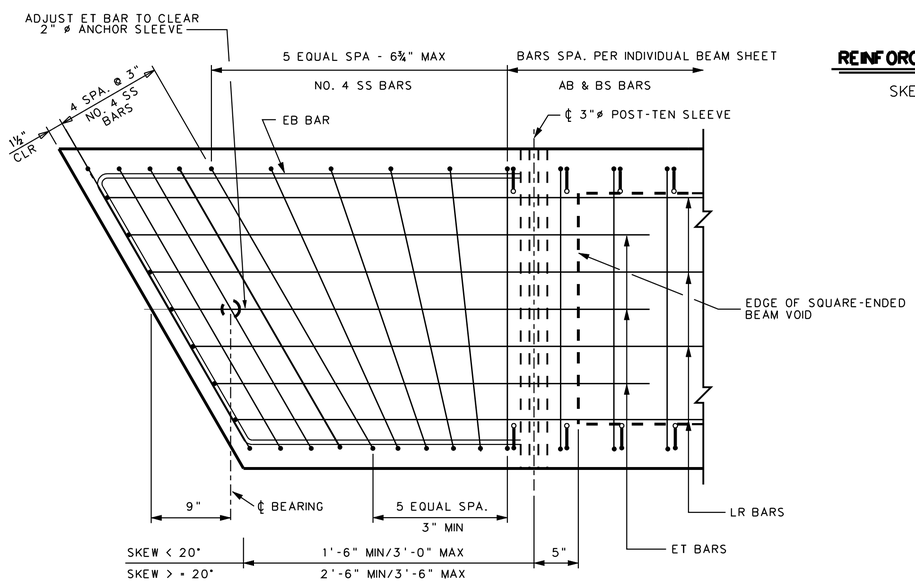

END BLOCK DETAIL - SKEWED BEAMS

WO/POST-TEN. ACCESS POCKET

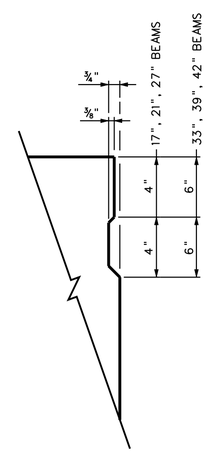

SHEAR KEY DETAIL

LIFTING DETAILS

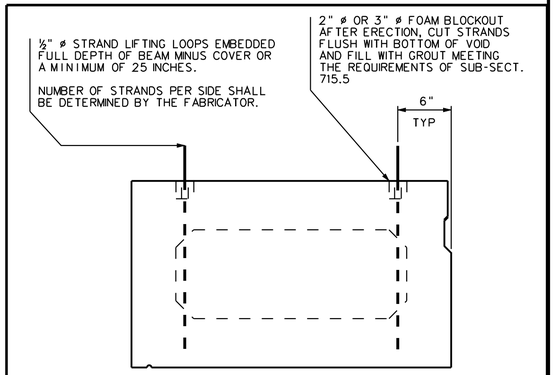

END VIEW

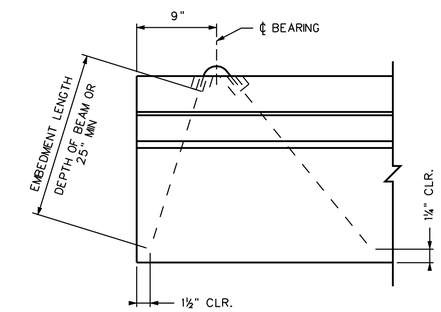

SIDE VIEW

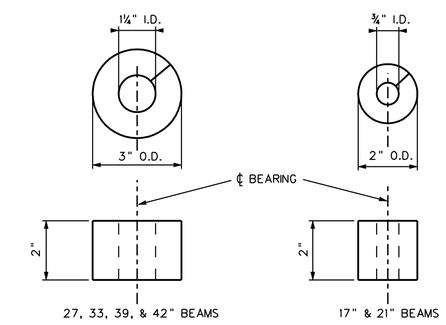

BLOCKOUT DETAILS

THIS SHEET SHALL BE USED IN CONJUNCTION WITH STANDARD SHEETS BR-B17A & B THRU BR-B42A & B, BR-B100, BR-B101, BR-B102B, BR-B103, BR-B104, BR-B105A & B AND BR-B106 AS APPROPRIATE.

APPROVED: Gregory Bailey — DIRECTOR, ENGINEERING DIVISION — DATE: 10-25-07

WEST VIRGINIA DEPARTMENT OF TRANSPORTATION
DIVISION OF HIGHWAYS
ENGINEERING DIVISION

PRESTRESSED CONCRETE BEAM
SKEWED END REINFORCING
MISC.DESIGN AND ASSEMBLY DETAILS

REVISED STANDARD SHEET BR-B102A

PREPARED: 07-02-07

REVISED:	
T.W.	12/27/10

WEST VIRGINIA DEPARTMENT OF TRANSPORTATION
DIVISION OF HIGHWAYS
ENGINEERING DIVISION

PRESTRESSED CONCRETE BEAM
SKEWED END REINFORCING
MISC. DESIGN AND ASSEMBLY DETAILS

DESIGNED BY: THB/
DRAWN BY: THB/
CHECKED BY: TM/
REVIEWED BY: TW/
DATE:
SCALE:
SHEET OF
BRIDGE NO.