PROJECT NUMBERS		DISTRICT	COUNTY	SHEET NO.	TOTAL
STATE	FEDERAL				

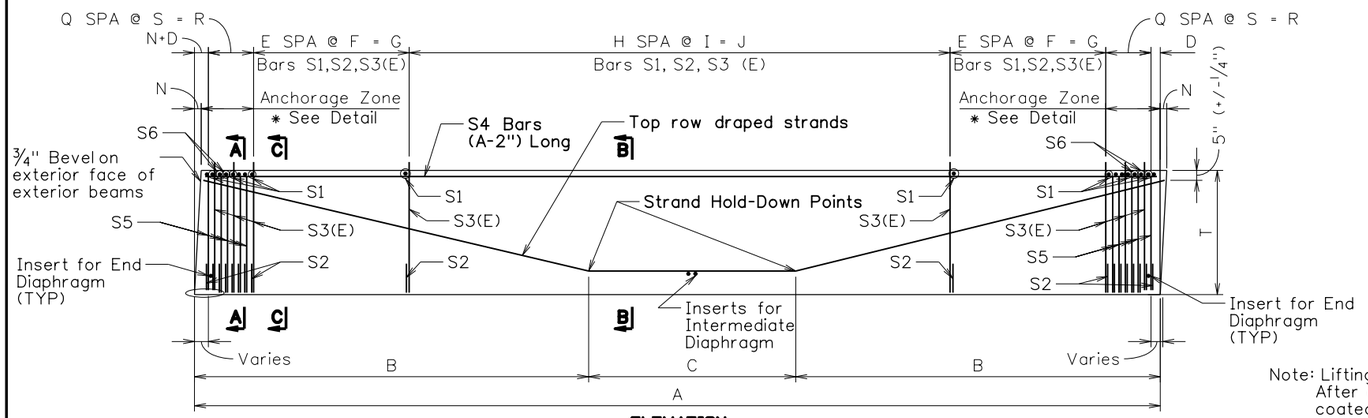

ELEVATION

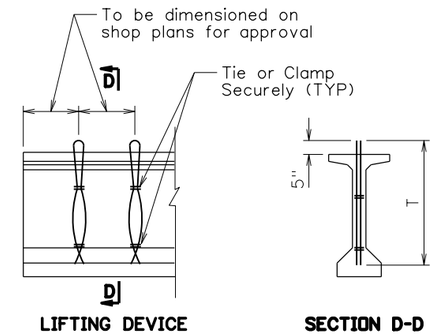

LIFTING DEVICE

SECTION D-D

Note: Lifting shall be by equal loads to each pair of loops. After erection, the loops shall be cut flush, and ends coated.

NOTES:

1. The concrete shall attain a compressive strength as shown by standard cylinders cured identically with the beams before transferring bond stress to the concrete or before releasing the end anchors.
2. The Department will reject the beams if the finished units contained honeycombed concrete to the extent that the Engineer determines the strength or deterioration resistance is reduced. Beam shortening due to shrinking and elastic changes is limited to 0.0005L.
3. Roughen the top surface of each beam to an amplitude of approximately ¼ inch and maintain clean and free of laitance.
4. Shop drawings shall show the detensioning plan by numbering the sequence of the strand pattern.
5. Prestressing strands shall be stabilized strand low relaxation uncoated seven wire strand in accordance with AASHTO M 203 grade 270. An initial stress of 202.5 psi shall be applied to the strand.
6. The threaded inserts shall have a minimum safe work load of 2500 lb in tension. All inserts shall be plugged to prevent concrete intrusion. Omit inserts on exterior face of exterior beams.
7. All threaded inserts and anchorage dowels are to be hot-dip galvanized after fabrication. Include the cost in Item 603018-*.
8. S5 vertical reinforcing bars placed at the ends of the beam is designed for bursting resistance. Refer to S5 bar table.
9. The beams height(T) shall be 36 inch minimum and vary in 6 inch increment.

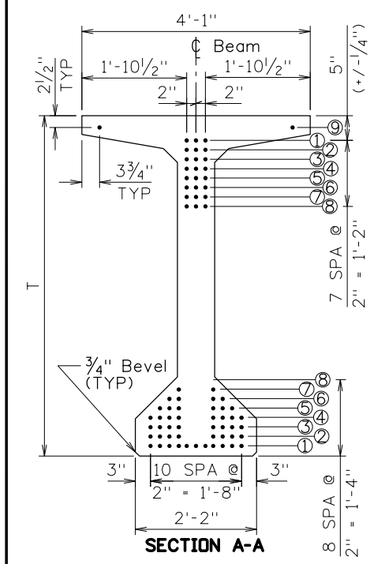

SECTION A-A

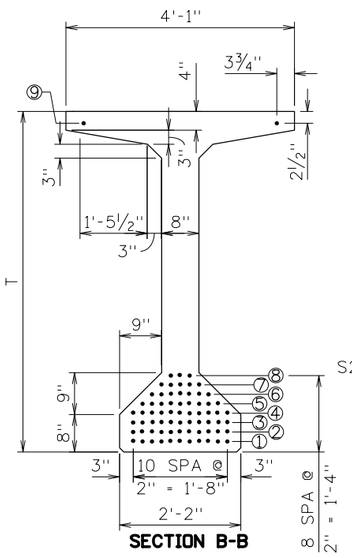

SECTION B-B

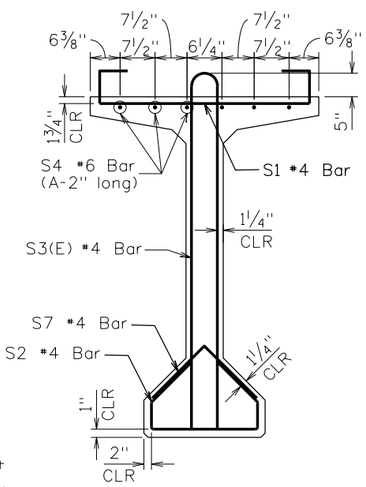

SECTION C-C
TYPICAL SECTION SHOWING STEEL REINFORCEMENT

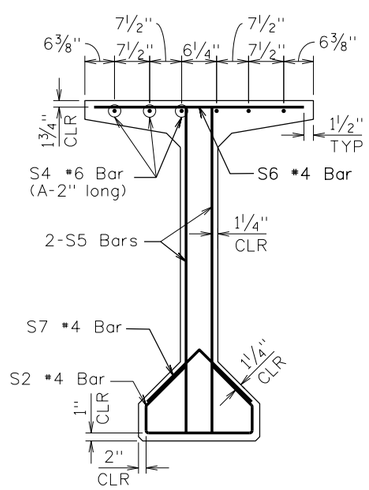

SECTION E-E
TYPICAL SECTION SHOWING STEEL REINFORCEMENT IN ANCHORAGE ZONE

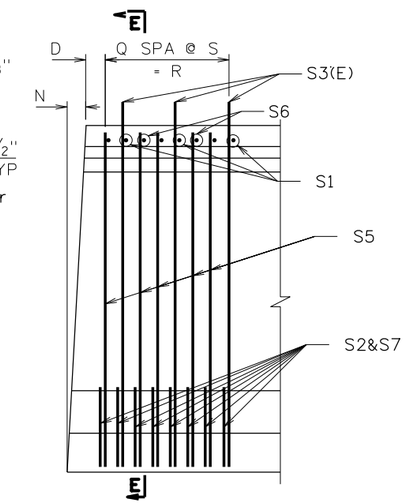

ANCHORAGE REINFORCEMENT

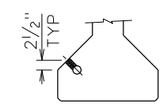

INSERT DETAIL A

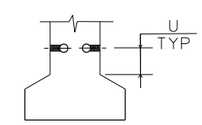

INSERT DETAIL B

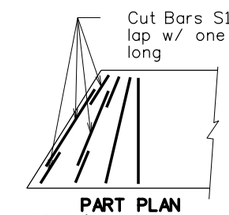

PART PLAN
(Showing skewed end, 15° skew or greater)

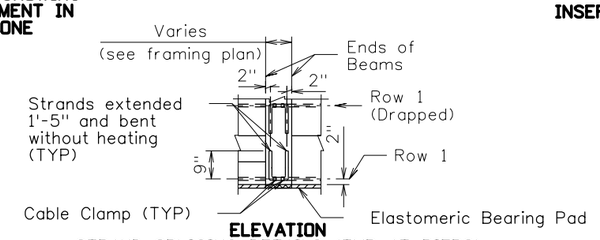

ELEVATION
STRAND SPLICING DETAILS (TYP AT PIERS)

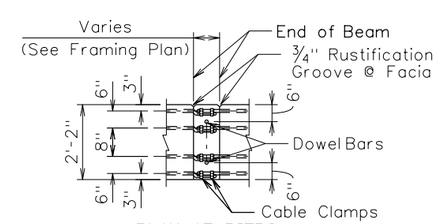

PLAN AT PIERS

BEAM DIMENSIONS (MEASURED ALONG ℄ BEAM)

MARK	NO REQD	DIMENSIONS A	B	C	D	E	F	G	H	I	J	K	L	M	N	P	Q	R	S	T	U	V	APPOX. WT EACH (LBS)

NUMBER OF 7 WIRE STRANDS IN INDICATED ROW

MARK	MIDSPAN (SECTION B-B) BOTTOM ①	②	③	④	⑤	⑥	⑦	⑧	TOP ⑨	END (SECTION A-A) BOTTOM ①	②	③	④	⑤	⑥	⑦	⑧	TOP ①	②	③	④	⑤	⑥	⑦	⑧	⑨	TOTAL NO. PER BEAM	CONCRETE STRENGTHS (PSI) f'ci	f'c	INITIAL PRESTRESS FORCE/STRAND (LBS)

REINFORCING BAR LIST

MARK	SIZE	COUNT/BEAM	TOTAL	LENGTH
S1				
S2				
S3(E)				
S4				
*S5				
S6				
S7				

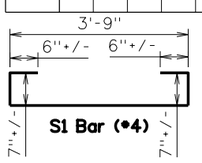

S1 Bar (#4)

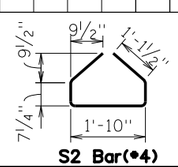

S2 Bar(#4)

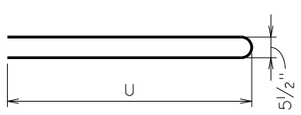

S3(E) Bar (#4)

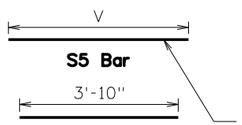

S5 Bar

S6 Bar (#4)

S7 Bar (#4)

* Specify bar size (refer to S5 bar table)

Note:
Place S3(E) bar parallel to skew for ease of Deck rebar placement.

(E) denotes epoxy coated reinforcing steel bars.

NO.	REVISION	DATE:	BY:

WEST VIRGINIA DEPARTMENT OF TRANSPORTATION
DIVISION OF HIGHWAYS
ENGINEERING DIVISION

DESIGNED	DATE
DRAWN	
CHECKED	
REVIEWED	

AASHTO TYPE IV – MODIFIED
49" TOP FLANGE
3200-CB5

SHEET OF
BRIDGE NO.